AUTHENTICATED
U.S. GOVERNMENT
INFORMATION
GPO

Title 40—Protection of Environment

(This book contains part 60)

Part

CHAPTER I—Environmental Protection Agency (Continued) 60

CHAPTER I—ENVIRONMENTAL PROTECTION AGENCY

SUBCHAPTER C—AIR PROGRAMS (CONTINUED)

Part		*Page*
60	Standards of performance for new stationary sources	5

EDITORIAL NOTE: Subchapter C—Air programs is contained in volumes 40 CFR parts 50–51, part 52 (52.01–52.1018), part 52 (52.1019–End), 53–59, part 60, parts 61–62, part 63 (63.1–63.1199), part 63 (63.1200–End), parts 64–71, parts 72–80, parts 81–85, part 86, and parts 87–135.

SUBCHAPTER C—AIR PROGRAMS (CONTINUED)

PART 60—STANDARDS OF PERFORMANCE FOR NEW STATIONARY SOURCES

Subpart A—General Provisions

Sec.
60.1 Applicability.
60.2 Definitions.
60.3 Units and abbreviations.
60.4 Address.
60.5 Determination of construction or modification.
60.6 Review of plans.
60.7 Notification and record keeping.
60.8 Performance tests.
60.9 Availability of information.
60.10 State authority.
60.11 Compliance with standards and maintenance requirements.
60.12 Circumvention.
60.13 Monitoring requirements.
60.14 Modification.
60.15 Reconstruction.
60.16 Priority list.
60.17 Incorporations by reference.
60.18 General control device requirements.
60.19 General notification and reporting requirements.

Subpart B—Adoption and Submittal of State Plans for Designated Facilities

60.20 Applicability.
60.21 Definitions.
60.22 Publication of guideline documents, emission guidelines, and final compliance times.
60.23 Adoption and submittal of State plans; public hearings.
60.24 Emission standards and compliance schedules.
60.25 Emission inventories, source surveillance, reports.
60.26 Legal authority.
60.27 Actions by the Administrator.
60.28 Plan revisions by the State.
60.29 Plan revisions by the Administrator.

Subpart C—Emission Guidelines and Compliance Times

60.30 Scope.
60.31 Definitions.

Subpart Ca [Reserved]

Subpart Cb—Emissions Guidelines and Compliance Times for Large Municipal Waste Combustors That Are Constructed on or Before September 20, 1994

60.30b Scope.
60.31b Definitions.
60.32b Designated facilities.
60.33b Emission guidelines for municipal waste combustor metals, acid gases, organics, and nitrogen oxides.
60.34b Emission guidelines for municipal waste combustor operating practices.
60.35b Emission guidelines for municipal waste combustor operator training and certification.
60.36b Emission guidelines for municipal waste combustor fugitive ash emissions.
60.37b Emission guidelines for air curtain incinerators.
60.38b Compliance and performance testing.
60.39b Reporting and recordkeeping guidelines and compliance schedules.

Subpart Cc—Emission Guidelines and Compliance Times for Municipal Solid Waste Landfills

60.30c Scope.
60.31c Definitions.
60.32c Designated facilities.
60.33c Emission guidelines for municipal solid waste landfill emissions.
60.34c Test methods and procedures.
60.35c Reporting and recordkeeping guidelines.
60.36c Compliance times.

Subpart Cd—Emissions Guidelines and Compliance Times for Sulfuric Acid Production Units

60.30d Designated facilities.
60.31d Emissions guidelines.
60.32d Compliance times.

Subpart Ce—Emission Guidelines and Compliance Times for Hospital/Medical/Infectious Waste Incinerators

60.30e Scope.
60.31e Definitions.
60.32e Designated facilities.
60.33e Emission guidelines.
60.34e Operator training and qualification guidelines.
60.35e Waste management guidelines.
60.36e Inspection guidelines.
60.37e Compliance, performance testing, and monitoring guidelines.
60.38e Reporting and recordkeeping guidelines.
60.39e Compliance times.

TABLE 1 TO SUBPART CE—EMISSION LIMITS FOR SMALL, MEDIUM, AND LARGE HMIWI

TABLE 2 TO SUBPART CE—EMISSION LIMITS FOR SMALL HMIWI WHICH MEET THE CRITERIA UNDER §60.33e(b)

Subpart D—Standards of Performance for Fossil-Fuel-Fired Steam Generators for Which Construction is Commenced After August 17, 1971

60.40 Applicability and designation of affected facility.
60.41 Definitions.
60.42 Standard for particulate matter.
60.43 Standard for sulfur dioxide.
60.44 Standard for nitrogen oxides.
60.45 Emission and fuel monitoring.
60.46 Test methods and procedures.

Subpart Da—Standards of Performance for Electric Utility Steam Generating Units for Which Construction is Commenced After September 18, 1978

60.40a Applicability and designation of affected facility.
60.41a Definitions.
60.42a Standard for particulate matter.
60.43a Standard for sulfur dioxide.
60.44a Standard for nitrogen oxides.
60.45a Commercial demonstration permit.
60.46a Compliance provisions.
60.47a Emission monitoring.
60.48a Compliance determination procedures and methods.
60.49a Reporting requirements.

Subpart Db—Standards of Performance for Industrial-Commercial-Institutional Steam Generating Units

60.40b Applicability and delegation of authority.
60.41b Definitions.
60.42b Standard for sulfur dioxide.
60.43b Standard for particulate matter.
60.44b Standard for nitrogen oxides.
60.45b Compliance and performance test methods and procedures for sulfur dioxide.
60.46b Compliance and performance test methods and procedures for particulate matter and nitrogen oxides.
60.47b Emission monitoring for sulfur dioxide.
60.48b Emission monitoring for particulate matter and nitrogen oxides.
60.49b Reporting and recordkeeping requirements.

Subpart Dc—Standards of Performance for Small Industrial-Commercial-Institutional Steam Generating Units

60.40c Applicability and delegation of authority.
60.41c Definitions.
60.42c Standard for sulfur dioxide.
60.43c Standard for particulate matter.
60.44c Compliance and performance test methods and procedures for sulfur dioxide.
60.45c Compliance and performance test methods and procedures for particulate matter.
60.46c Emission monitoring for sulfur dioxide.
60.47c Emission monitoring for particulate matter.
60.48c Reporting and recordkeeping requirements.

Subpart E—Standards of Performance for Incinerators

60.50 Applicability and designation of affected facility.
60.51 Definitions.
60.52 Standard for particulate matter.
60.53 Monitoring of operations.
60.54 Test methods and procedures.

Subpart Ea—Standards of Performance for Municipal Waste Combustors for Which Construction is Commenced After December 20, 1989 and on or Before September 20, 1994

60.50a Applicability and delegation of authority.
60.51a Definitions.
60.52a Standard for municipal waste combustor metals.
60.53a Standard for municipal waste combustor organics.
60.54a Standard for municipal waste combustor acid gases.
60.55a Standard for nitrogen oxides.
60.56a Standard for municipal waste combustor operating practices.
60.57a [Reserved]
60.58a Compliance and performance testing.
60.59a Reporting and recordkeeping requirements.

Subpart Eb—Standards of Performance for Large Municipal Waste Combustors for Which Construction is Commenced After September 20, 1994 or for Which Modification or Reconstruction is Commenced After June 19, 1996

60.50b Applicability and delegation of authority.
60.51b Definitions.
60.52b Standards for municipal waste combustor metals, acid gases, organics, and nitrogen oxides.
60.53b Standards for municipal waste combustor operating practices.
60.54b Standards for municipal waste combustor operator training and certification.
60.55b Standards for municipal waste combustor fugitive ash emissions.
60.56b Standards for air curtain incinerators.
60.57b Siting requirements.
60.58b Compliance and performance testing.
60.59b Reporting and recordkeeping requirements.

Subpart Ec—Standards of Performance for Hospital/Medical/Infectious Waste Incinerators for Which Construction is Commenced After June 20, 1996

60.50c Applicability and delegation of authority.
60.51c Definitions.
60.52c Emission limits.
60.53c Operator training and qualification requirements.
60.54c Siting requirements.
60.55c Waste management plan.
60.56c Compliance and performance testing.
60.57c Monitoring requirements.
60.58c Reporting and recordkeeping requirements.

TABLE 1 TO SUBPART EC—EMISSION LIMITS FOR SMALL, MEDIUM, AND LARGE HMIWI

TABLE 2 TO SUBPART EC—TOXIC EQUIVALENCY FACTORS

TABLE 3 TO SUBPART EC—OPERATING PARAMETERS TO BE MONITORED AND MINIMUM MEASUREMENT AND RECORDING FREQUENCIES

Subpart F—Standards of Performance for Portland Cement Plants

60.60 Applicability and designation of affected facility.
60.61 Definitions.
60.62 Standard for particulate matter.
60.63 Monitoring of operations.
60.64 Test methods and procedures.
60.65 Recordkeeping and reporting requirements.
60.66 Delegation of authority.

Subpart G—Standards of Performance for Nitric Acid Plants

60.70 Applicability and designation of affected facility.
60.71 Definitions.
60.72 Standard for nitrogen oxides.
60.73 Emission monitoring.
60.74 Test methods and procedures.

Subpart H—Standards of Performance for Sulfuric Acid Plants

60.80 Applicability and designation of affected facility.
60.81 Definitions.
60.82 Standard for sulfur dioxide.
60.83 Standard for acid mist.
60.84 Emission monitoring.
60.85 Test methods and procedures.

Subpart I—Standards of Performance for Hot Mix Asphalt Facilities

60.90 Applicability and designation of affected facility.
60.91 Definitions.
60.92 Standard for particulate matter.
60.93 Test methods and procedures.

Subpart J—Standards of Performance for Petroleum Refineries

60.100 Applicability, designation of affected facility, and reconstruction.
60.101 Definitions.
60.102 Standard for particulate matter.
60.103 Standard for carbon monoxide.
60.104 Standards for sulfur oxides.
60.105 Monitoring of emissions and operations.
60.106 Test methods and procedures.
60.107 Reporting and recordkeeping requirements.
60.108 Performance test and compliance provisions.
60.109 Delegation of authority.

Subpart K—Standards of Performance for Storage Vessels for Petroleum Liquids for Which Construction, Reconstruction, or Modification Commenced After June 11, 1973, and Prior to May 19, 1978

60.110 Applicability and designation of affected facility.
60.111 Definitions.
60.112 Standard for volatile organic compounds (VOC).
60.113 Monitoring of operations.

Subpart Ka—Standards of Performance for Storage Vessels for Petroleum Liquids for Which Construction, Reconstruction, or Modification Commenced After May 18, 1978, and Prior to July 23, 1984

60.110a Applicability and designation of affected facility.
60.111a Definitions.
60.112a Standard for volatile organic compounds (VOC).
60.113a Testing and procedures.
60.114a Alternative means of emission limitation.
60.115a Monitoring of operations.

Subpart Kb—Standards of Performance for Volatile Organic Liquid Storage Vessels (Including Petroleum Liquid Storage Vessels) for Which Construction, Reconstruction, or Modification Commenced After July 23, 1984

60.110b Applicability and designation of affected facility.
60.111b Definitions.
60.112b Standard for volatile organic compounds (VOC).
60.113b Testing and procedures.
60.114b Alternative means of emission limitation.
60.115b Reporting and recordkeeping requirements.
60.116b Monitoring of operations.
60.117b Delegation of authority.

Subpart L—Standards of Performance for Secondary Lead Smelters

60.120 Applicability and designation of affected facility.
60.121 Definitions.
60.122 Standard for particulate matter.
60.123 Test methods and procedures.

Subpart M—Standards of Performance for Secondary Brass and Bronze Production Plants

60.130 Applicability and designation of affected facility.
60.131 Definitions.
60.132 Standard for particulate matter.
60.133 Test methods and procedures.

Subpart N—Standards of Performance for Primary Emissions from Basic Oxygen Process Furnances for Which Construction is Commenced After June 11, 1973

60.140 Applicability and designation of affected facility.
60.141 Definitions.
60.142 Standard for particulate matter.
60.143 Monitoring of operations.
60.144 Test methods and procedures.

Subpart Na—Standards of Performance for Secondary Emissions from Basic Oxygen Process Steelmaking Facilities for Which Construction is Commenced After January 20, 1983

60.140a Applicability and designation of affected facilities.
60.141a Definitions.
60.142a Standards for particulate matter.
60.143a Monitoring of operations.
60.144a Test methods and procedures.
60.145a Compliance provisions.

Subpart O—Standards of Performance for Sewage Treatment Plants

60.150 Applicability and designation of affected facility.
60.151 Definitions.
60.152 Standard for particulate matter.
60.153 Monitoring of operations.
60.154 Test methods and procedures.
60.155 Reporting.
60.156 Delegation of authority.

Subpart P—Standards of Performance for Primary Copper Smelters

60.160 Applicability and designation of affected facility.
60.161 Definitions.
60.162 Standard for particulate matter.
60.163 Standard for sulfur dioxide.
60.164 Standard for visible emissions.
60.165 Monitoring of operations.
60.166 Test methods and procedures.

Subpart Q—Standards of Performance for Primary Zinc Smelters

60.170 Applicability and designation of affected facility.
60.171 Definitions.
60.172 Standard for particulate matter.
60.173 Standard for sulfur dioxide.
60.174 Standard for visible emissions.
60.175 Monitoring of operations.
60.176 Test methods and procedures.

Subpart R—Standards of Performance for Primary Lead Smelters

60.180 Applicability and designation of affected facility.
60.181 Definitions.
60.182 Standard for particulate matter.
60.183 Standard for sulfur dioxide.
60.184 Standard for visible emissions.
60.185 Monitoring of operations.
60.186 Test methods and procedures.

Subpart S—Standards of Performance for Primary Aluminum Reduction Plants

60.190 Applicability and designation of affected facility.

60.191 Definitions.
60.192 Standard for fluorides.
60.193 Standard for visible emissions.
60.194 Monitoring of operations.
60.195 Test methods and procedures.

Subpart T—Standards of Performance for the Phosphate Fertilizer Industry: Wet-Process Phosphoric Acid Plants

60.200 Applicability and designation of affected facility.
60.201 Definitions.
60.202 Standard for fluorides.
60.203 Monitoring of operations.
60.204 Test methods and procedures.

Subpart U—Standards of Performance for the Phosphate Fertilizer Industry: Superphosphoric Acid Plants

60.210 Applicability and designation of affected facility.
60.211 Definitions.
60.212 Standard for fluorides.
60.213 Monitoring of operations.
60.214 Test methods and procedures.

Subpart V—Standards of Performance for the Phosphate Fertilizer Industry: Diammonium Phosphate Plants

60.220 Applicability and designation of affected facility.
60.221 Definitions.
60.222 Standard for fluorides.
60.223 Monitoring of operations.
60.224 Test methods and procedures.

Subpart W—Standards of Performance for the Phosphate Fertilizer Industry: Triple Superphosphate Plants

60.230 Applicability and designation of affected facility.
60.231 Definitions.
60.232 Standard for fluorides.
60.233 Monitoring of operations.
60.234 Test methods and procedures.

Subpart X—Standards of Performance for the Phosphate Fertilizer Industry: Granular Triple Superphosphate Storage Facilities

60.240 Applicability and designation of affected facility.
60.241 Definitions.
60.242 Standard for fluorides.
60.243 Monitoring of operations.
60.244 Test methods and procedures.

Subpart Y—Standards of Performance for Coal Preparation Plants

60.250 Applicability and designation of affected facility.
60.251 Definitions.
60.252 Standards for particulate matter.
60.253 Monitoring of operations.
60.254 Test methods and procedures.

Subpart Z—Standards of Performance for Ferroalloy Production Facilities

60.260 Applicability and designation of affected facility.
60.261 Definitions.
60.262 Standard for particulate matter.
60.263 Standard for carbon monoxide.
60.264 Emission monitoring.
60.265 Monitoring of operations.
60.266 Test methods and procedures.

Subpart AA—Standards of Performance for Steel Plants: Electric Arc Furnaces Constructed After October 21, 1974 and On or Before August 17, 1983

60.270 Applicability and designation of affected facility.
60.271 Definitions.
60.272 Standard for particulate matter.
60.273 Emission monitoring.
60.274 Monitoring of operations.
60.275 Test methods and procedures.
60.276 Recordkeeping and reporting requirements.

Subpart AAa—Standards of Performance for Steel Plants: Electric Arc Furnaces and Argon-Oxygen Decarburization Vessels Constructed After August 7, 1983

60.270a Applicability and designation of affected facility.
60.271a Definitions.
60.272a Standard for particulate matter.
60.273a Emission monitoring.
60.274a Monitoring of operations.
60.275a Test methods and procedures.
60.276a Recordkeeping and reporting requirements.

Subpart BB—Standards of Performance for Kraft Pulp Mills

60.280 Applicability and designation of affected facility.
60.281 Definitions.
60.282 Standard for particulate matter.
60.283 Standard for total reduced sulfur (TRS).
60.284 Monitoring of emissions and operations.
60.285 Test methods and procedures.

Subpart CC—Standards of Performance for Glass Manufacturing Plants

60.290 Applicability and designation of affected facility.
60.291 Definitions.
60.292 Standards for particulate matter.

60.293 Standards for particulate matter from glass melting furnace with modified-processes.
60.294—60.295 [Reserved]
60.296 Test methods and procedures.

Subpart DD—Standards of Performance for Grain Elevators

60.300 Applicability and designation of affected facility.
60.301 Definitions.
60.302 Standard for particulate matter.
60.303 Test methods and procedures.
60.304 Modifications.

Subpart EE—Standards of Performance for Surface Coating of Metal Furniture

60.310 Applicability and designation of affected facility.
60.311 Definitions and symbols.
60.312 Standard for volatile organic compounds (VOC).
60.313 Performance tests and compliance provisions.
60.314 Monitoring of emissions and operations.
60.315 Reporting and recordkeeping requirements.
60.316 Test methods and procedures.

Subpart FF [Reserved]

Subpart GG—Standards of Performance for Stationary Gas Turbines

60.330 Applicability and designation of affected facility.
60.331 Definitions.
60.332 Standard for nitrogen oxides.
60.333 Standard for sulfur dioxide.
60.334 Monitoring of operations.
60.335 Test methods and procedures.

Subpart HH—Standards of Performance for Lime Manufacturing Plants

60.340 Applicability and designation of affected facility.
60.341 Definitions.
60.342 Standard for particulate matter.
60.343 Monitoring of emissions and operations.
60.344 Test methods and procedures.

Subpart KK—Standards of Performance for Lead-Acid Battery Manufacturing Plants

60.370 Applicability and designation of affected facility.
60.371 Definitions.
60.372 Standards for lead.
60.373 Monitoring of emissions and operations.
60.374 Test methods and procedures.

Subpart LL—Standards of Performance for Metallic Mineral Processing Plants

60.380 Applicability and designation of affected facility.
60.381 Definitions.
60.382 Standard for particulate matter.
60.383 Reconstruction.
60.384 Monitoring of operations.
60.385 Recordkeeping and reporting requirements.
60.386 Test methods and procedures.

Subpart MM—Standards of Performance for Automobile and Light Duty Truck Surface Coating Operations

60.390 Applicability and designation of affected facility.
60.391 Definitions.
60.392 Standards for volatile organic compounds.
60.393 Performance test and compliance provisions.
60.394 Monitoring of emissions and operations.
60.395 Reporting and recordkeeping requirements.
60.396 Reference methods and procedures.
60.397 Modifications.
60.398 Innovative technology waivers.

Subpart NN—Standards of Performance for Phosphate Rock Plants

60.400 Applicability and designation of affected facility.
60.401 Definitions.
60.402 Standard for particulate matter.
60.403 Monitoring of emissions and operations.
60.404 Test methods and procedures.

Subpart PP—Standards of Performance for Ammonium Sulfate Manufacture

60.420 Applicability and designation of affected facility.
60.421 Definitions.
60.422 Standards for particulate matter.
60.423 Monitoring of operations.
60.424 Test methods and procedures.

Subpart QQ—Standards of Performance for the Graphic Arts Industry: Publication Rotogravure Printing

60.430 Applicability and designation of affected facility.
60.431 Definitions and notations.
60.432 Standard for volatile organic compounds.
60.433 Performance test and compliance provisions.
60.434 Monitoring of operations and recordkeeping.
60.435 Test methods and procedures.

Subpart RR—Standards of Performance for Pressure Sensitive Tape and Label Surface Coating Operations

60.440 Applicability and designation of affected facility.
60.441 Definitions and symbols.
60.442 Standard for volatile organic compounds.
60.443 Compliance provisions.
60.444 Performance test procedures.
60.445 Monitoring of operations and recordkeeping.
60.446 Test methods and procedures.
60.447 Reporting requirements.

Subpart SS—Standards of Performance for Industrial Surface Coating: Large Appliances

60.450 Applicability and designation of affected facility.
60.451 Definitions.
60.452 Standard for volatile organic compounds.
60.453 Performance test and compliance provisions.
60.454 Monitoring of emissions and operations.
60.455 Reporting and recordkeeping requirements.
60.456 Test methods and procedures.

Subpart TT—Standards of Performance for Metal Coil Surface Coating

60.460 Applicability and designation of affected facility.
60.461 Definitions.
60.462 Standards for volatile organic compounds.
60.463 Performance test and compliance provisions.
60.464 Monitoring of emissions and operations.
60.465 Reporting and recordkeeping requirements.
60.466 Test methods and procedures.

Subpart UU—Standards of Performance for Asphalt Processing and Asphalt Roofing Manufacture

60.470 Applicability and designation of affected facilities.
60.471 Definitions.
60.472 Standards for particulate matter.
60.473 Monitoring of operations.
60.474 Test methods and procedures.

Subpart VV—Standards of Performance for Equipment Leaks of VOC in the Synthetic Organic Chemicals Manufacturing Industry

60.480 Applicability and designation of affected facility.
60.481 Definitions.
60.482–1 Standards: General.
60.482–2 Standards: Pumps in light liquid service.
60.482–3 Standards: Compressors.
60.482–4 Standards: Pressure relief devices in gas/vapor service.
60.482–5 Standards: Sampling connection systems.
60.482–6 Standards: Open-ended valves or lines.
60.482–7 Standards: Valves in gas/vapor service and in light liquid service.
60.482–8 Standards: Pumps and valves in heavy liquid service, pressure relief devices in light liquid or heavy liquid service, and flanges and other connectors.
60.482–9 Standards: Delay of repair.
60.482–10 Standards: Closed vent systems and control devices.
60.483–1 Alternative standards for valves—allowable percentage of valves leaking.
60.483–2 Alternative standards for valves—skip period leak detection and repair.
60.484 Equivalence of means of emission limitation.
60.485 Test methods and procedures.
60.486 Recordkeeping requirements.
60.487 Reporting requirements.
60.488 Reconstruction.
60.489 List of chemicals produced by affected facilities.

Subpart WW—Standards of Performance for the Beverage Can Surface Coating Industry

60.490 Applicability and designation of affected facility.
60.491 Definitions.
60.492 Standards for volatile organic compounds.
60.493 Performance test and compliance provisions.
60.494 Monitoring of emissions and operations.
60.495 Reporting and recordkeeping requirements.
60.496 Test methods and procedures.

Subpart XX—Standards of Performance for Bulk Gasoline Terminals

60.500 Applicability and designation of affected facility.
60.501 Definitions.
60.502 Standards for Volatile Organic Compound (VOC) emissions from bulk gasoline terminals.
60.503 Test methods and procedures.
60.504 [Reserved]
60.505 Reporting and recordkeeping.
60.506 Reconstruction.

Subpart AAA—Standards of Performance for New Residential Wood Heaters

60.530 Applicability and designation of affected facility.
60.531 Definitions.
60.532 Standards for particulate matter.
60.533 Compliance and certification.
60.534 Test methods and procedures.
60.535 Laboratory accreditation.
60.536 Permanent label, temporary label, and owner's manual.
60.537 Reporting and recordkeeping.
60.538 Prohibitions.
60.539 Hearing and appeal procedures.
60.539a Delegation of authority.
60.539b General provisions exclusions.

Subpart BBB—Standards of Performance for the Rubber Tire Manufacturing Industry

60.540 Applicability and designation of affected facilities.
60.541 Definitions.
60.542 Standards for volatile organic compounds.
60.542a Alternate standard for volatile organic compounds.
60.543 Performance test and compliance provisions.
60.544 Monitoring of operations.
60.545 Recordkeeping requirements.
60.546 Reporting requirements.
60.547 Test methods and procedures.
60.548 Delegation of authority.

Subpart CCC [Reserved]

Subpart DDD—Standards of Performance for Volatile Organic Compound (VOC) Emissions from the Polymer Manufacturing Industry

60.560 Applicability and designation of affected facilities.
60.561 Definitions.
60.562–1 Standards: Process emissions.
60.562–2 Standards: Equipment leaks of VOC.
60.563 Monitoring requirements.
60.564 Test methods and procedures.
60.565 Reporting and recordkeeping requirements.
60.566 Delegation of authority.

Subpart EEE [Reserved]

Subpart FFF—Standards of Performance for Flexible Vinyl and Urethane Coating and Printing

60.580 Applicability and designation of affected facility.
60.581 Definitions and symbols.
60.582 Standard for volatile organic compounds.
60.583 Test methods and procedures.
60.584 Monitoring of operations and recordkeeping requirements.
60.585 Reporting requirements.

Subpart GGG—Standards of Performance for Equipment Leaks of VOC in Petroleum Refineries

60.590 Applicability and designation of affected facility.
60.591 Definitions.
60.592 Standards.
60.593 Exceptions.

Subpart HHH—Standards of Performance for Synthetic Fiber Production Facilities

60.600 Applicability and designation of affected facility.
60.601 Definitions.
60.602 Standard for volatile organic compounds.
60.603 Performance test and compliance provisions.
60.604 Reporting requirements.

Subpart III—Standards of Performance for Volatile Organic Compound (VOC) Emissions From the Synthetic Organic Chemical Manufacturing Industry (SOCMI) Air Oxidation Unit Processes

60.610 Applicability and designation of affected facility.
60.611 Definitions.
60.612 Standards.
60.613 Monitoring of emissions and operations.
60.614 Test methods and procedures.
60.615 Reporting and recordkeeping requirements.
60.616 Reconstruction.
60.617 Chemicals affected by subpart III.
60.618 Delegation of authority.

Subpart JJJ—Standards of Performance for Petroleum Dry Cleaners

60.620 Applicability and designation of affected facility.
60.621 Definitions.
60.622 Standards for volatile organic compounds.
60.623 Equivalent equipment and procedures.
60.624 Test methods and procedures.
60.625 Recordkeeping requirements.

Subpart KKK—Standards of Performance for Equipment Leaks of VOC From Onshore Natural Gas Processing Plants

60.630 Applicability and designation of affected facility.
60.631 Definitions.
60.632 Standards.
60.633 Exceptions.

60.634 Alternative means of emission limitation.
60.635 Recordkeeping requirements.
60.636 Reporting requirements.

Subpart LLL—Standards of Performance for Onshore Natural Gas Processing: SO_2 Emissions

60.640 Applicability and designation of affected facilities.
60.641 Definitions.
60.642 Standards for sulfur dioxide.
60.643 Compliance provisions.
60.644 Test methods and procedures.
60.645 [Reserved]
60.646 Monitoring of emissions and operations.
60.647 Recordkeeping and reporting requirements.
60.648 Optional procedure for measuring hydrogen sulfide in acid gas—Tutwiler Procedure.

Subpart MMM [Reserved]

Subpart NNN—Standards of Performance for Volatile Organic Compound (VOC) Emissions From Synthetic Organic Chemical Manufacturing Industry (SOCMI) Distillation Operations

60.660 Applicability and designation of affected facility.
60.661 Definitions.
60.662 Standards.
60.663 Monitoring of emissions and operations.
60.664 Test methods and procedures.
60.665 Reporting and recordkeeping requirements.
60.666 Reconstruction.
60.667 Chemicals affected by subpart NNN.
60.668 Delegation of authority.

Subpart OOO—Standards of Performance for Nonmetallic Mineral Processing Plants

60.670 Applicability and designation of affected facility.
60.671 Definitions.
60.672 Standard for particulate matter.
60.673 Reconstruction.
60.674 Monitoring of operations.
60.675 Test methods and procedures.
60.676 Reporting and recordkeeping.

Subpart PPP—Standard of Performance for Wool Fiberglass Insulation Manufacturing Plants

60.680 Applicability and designation of affected facility.
60.681 Definitions.
60.682 Standard for particulate matter.
60.683 Monitoring of operations.
60.684 Recordkeeping and reporting requirements.
60.685 Test methods and procedures.

Subpart QQQ—Standards of Performance for VOC Emissions From Petroleum Refinery Wastewater Systems

60.690 Applicability and designation of affected facility.
60.691 Definitions.
60.692–1 Standards: General.
60.692–2 Standards: Individual drain systems.
60.692–3 Standards: Oil-water separators.
60.692–4 Standards: Aggregate facility.
60.692–5 Standards: Closed vent systems and control devices.
60.692–6 Standards: Delay of repair.
60.692–7 Standards: Delay of compliance.
60.693–1 Alternative standards for individual drain systems.
60.693–2 Alternative standards for oil-water separators.
60.694 Permission to use alternative means of emission limitation.
60.695 Monitoring of operations.
60.696 Performance test methods and procedures and compliance provisions.
60.697 Recordkeeping requirements.
60.698 Reporting requirements.
60.699 Delegation of authority.

Subpart RRR—Standards of Performance for Volatile Organic Compound Emissions from Synthetic Organic Chemical Manufacturing Industry (SOCMI) Reactor Processes

60.700 Applicability and designation of affected facility.
60.701 Definitions.
60.702 Standards.
60.703 Monitoring of emissions and operations.
60.704 Test methods and procedures.
60.705 Reporting and recordkeeping requirements.
60.706 Reconstruction.
60.707 Chemicals affected by subpart RRR.
60.708 Delegation of authority.

Subpart SSS—Standards of Performance for Magnetic Tape Coating Facilities

60.710 Applicability and designation of affected facility.
60.711 Definitions, symbols, and cross-reference tables.
60.712 Standards for volatile organic compounds.
60.713 Compliance provisions.
60.714 Installation of monitoring devices and recordkeeping.
60.715 Test methods and procedures.
60.716 Permission to use alternative means of emission limitation.

60.717 Reporting and monitoring requirements.
60.718 Delegation of authority.

Subpart TTT—Standards of Performance for Industrial Surface Coating: Surface Coating of Plastic Parts for Business Machines

60.720 Applicability and designation of affected facility.
60.721 Definitions.
60.722 Standards for volatile organic compounds.
60.723 Performance test and compliance provisions.
60.724 Reporting and recordkeeping requirements.
60.725 Test methods and procedures.
60.726 Delegation of authority.

Subpart UUU—Standards of Performance for Calciners and Dryers in Mineral Industries

60.730 Applicability and designation of affected facility.
60.731 Definitions.
60.732 Standards for particulate matter.
60.733 Reconstruction.
60.734 Monitoring of emissions and operations.
60.735 Recordkeeping and reporting requirements.
60.736 Test methods and procedures.
60.737 Delegation of authority.

Subpart VVV—Standards of Performance for Polymeric Coating of Supporting Substrates Facilities

60.740 Applicability and designation of affected facility.
60.741 Definitions, symbols, and cross-reference tables.
60.742 Standards for violatile organic compounds.
60.743 Compliance provisions.
60.744 Monitoring requirements.
60.745 Test methods and procedures.
60.746 Permission to use alternative means of emission limitation.
60.747 Reporting and recordkeeping requirements.
60.748 Delegation of authority.

Subpart WWW—Standards of Performance for Municipal Solid Waste Landfills

60.750 Applicability, designation of affected facility, and delegation of authority.
60.751 Definitions.
60.752 Standards for air emissions from municipal solid waste landfills.
60.753 Operational standards for collection and control systems.
60.754 Test methods and procedures.
60.755 Compliance provisions.
60.756 Monitoring of operations.
60.757 Reporting requirements.
60.758 Recordkeeping requirements.
60.759 Specifications for active collection systems.

APPENDIX A TO PART 60—TEST METHODS
APPENDIX B TO PART 60—PERFORMANCE SPECIFICATIONS
APPENDIX C TO PART 60—DETERMINATION OF EMISSION RATE CHANGE
APPENDIX D TO PART 60—REQUIRED EMISSION INVENTORY INFORMATION
APPENDIX E TO PART 60 [RESERVED]
APPENDIX F TO PART 60—QUALITY ASSURANCE PROCEDURES
APPENDIX G TO PART 60—PROVISIONS FOR AN ALTERNATIVE METHOD OF DEMONSTRATING COMPLIANCE WITH 40 CFR 60.43 FOR THE NEWTON POWER STATION OF CENTRAL ILLINOIS PUBLIC SERVICE COMPANY
APPENDIX H TO PART 60 [RESERVED]
APPENDIX I TO PART 60—REMOVABLE LABEL AND OWNER'S MANUAL

AUTHORITY: 42 U.S.C. 7401–7601.

SOURCE: 36 FR 24877, Dec. 23, 1971, unless otherwise noted.

Subpart A—General Provisions

§ 60.1 Applicability.

(a) Except as provided in subparts B and C, the provisions of this part apply to the owner or operator of any stationary source which contains an affected facility, the construction or modification of which is commenced after the date of publication in this part of any standard (or, if earlier, the date of publication of any proposed standard) applicable to that facility.

(b) Any new or revised standard of performance promulgated pursuant to section 111(b) of the Act shall apply to the owner or operator of any stationary source which contains an affected facility, the construction or modification of which is commenced after the date of publication in this part of such new or revised standard (or, if earlier, the date of publication of any proposed standard) applicable to that facility.

(c) In addition to complying with the provisions of this part, the owner or operator of an affected facility may be required to obtain an operating permit issued to stationary sources by an authorized State air pollution control agency or by the Administrator of the U.S. Environmental Protection Agency (EPA) pursuant to Title V of the Clean

Air Act (Act) as amended November 15, 1990 (42 U.S.C. 7661). For more information about obtaining an operating permit see part 70 of this chapter.

(d) *Site-specific standard for Merck & Co., Inc.'s Stonewall Plant in Elkton, Virginia.* (1) This paragraph applies only to the pharmaceutical manufacturing facility, commonly referred to as the Stonewall Plant, located at Route 340 South, in Elkton, Virginia (''site'').

(2) Except for compliance with 40 CFR 60.49b(u), the site shall have the option of either complying directly with the requirements of this part, or reducing the site-wide emissions caps in accordance with the procedures set forth in a permit issued pursuant to 40 CFR 52.2454. If the site chooses the option of reducing the site-wide emissions caps in accordance with the procedures set forth in such permit, the requirements of such permit shall apply in lieu of the otherwise applicable requirements of this part.

(3) Notwithstanding the provisions of paragraph (d)(2) of this section, for any provisions of this part except for Subpart Kb, the owner/operator of the site shall comply with the applicable provisions of this part if the Administrator determines that compliance with the provisions of this part is necessary for achieving the objectives of the regulation and the Administrator notifies the site in accordance with the provisions of the permit issued pursuant to 40 CFR 52.2454.

[40 FR 53346, Nov. 17, 1975, as amended at 55 FR 51382, Dec. 13, 1990; 59 FR 12427, Mar. 16, 1994; 62 FR 52641, Oct. 8, 1997]

§ 60.2 Definitions.

The terms used in this part are defined in the Act or in this section as follows:

Act means the Clean Air Act (42 U.S.C. 7401 *et seq.*)

Administrator means the Administrator of the Environmental Protection Agency or his authorized representative.

Affected facility means, with reference to a stationary source, any apparatus to which a standard is applicable.

Alternative method means any method of sampling and analyzing for an air pollutant which is not a reference or equivalent method but which has been demonstrated to the Administrator's satisfaction to, in specific cases, produce results adequate for his determination of compliance.

Approved permit program means a State permit program approved by the Administrator as meeting the requirements of part 70 of this chapter or a Federal permit program established in this chapter pursuant to Title V of the Act (42 U.S.C. 7661).

Capital expenditure means an expenditure for a physical or operational change to an existing facility which exceeds the product of the applicable ''annual asset guideline repair allowance percentage'' specified in the latest edition of Internal Revenue Service (IRS) Publication 534 and the existing facility's basis, as defined by section 1012 of the Internal Revenue Code. However, the total expenditure for a physical or operational change to an existing facility must not be reduced by any ''excluded additions'' as defined in IRS Publication 534, as would be done for tax purposes.

Clean coal technology demonstration project means a project using funds appropriated under the heading 'Department of Energy-Clean Coal Technology', up to a total amount of $2,500,000,000 for commercial demonstrations of clean coal technology, or similar projects funded through appropriations for the Environmental Protection Agency.

Commenced means, with respect to the definition of *new source* in section 111(a)(2) of the Act, that an owner or operator has undertaken a continuous program of construction or modification or that an owner or operator has entered into a contractual obligation to undertake and complete, within a reasonable time, a continuous program of construction or modification.

Construction means fabrication, erection, or installation of an affected facility.

Continuous monitoring system means the total equipment, required under the emission monitoring sections in applicable subparts, used to sample and condition (if applicable), to analyze, and to provide a permanent record of emissions or process parameters.

Electric utility steam generating unit means any steam electric generating

unit that is constructed for the purpose of supplying more than one-third of its potential electric output capacity and more than 25 MW electrical output to any utility power distribution system for sale. Any steam supplied to a steam distribution system for the purpose of providing steam to a steam-electric generator that would produce electrical energy for sale is also considered in determining the electrical energy output capacity of the affected facility.

Equivalent method means any method of sampling and analyzing for an air pollutant which has been demonstrated to the Administrator's satisfaction to have a consistent and quantitatively known relationship to the reference method, under specified conditions.

Excess Emissions and Monitoring Systems Performance Report is a report that must be submitted periodically by a source in order to provide data on its compliance with stated emission limits and operating parameters, and on the performance of its monitoring systems.

Existing facility means, with reference to a stationary source, any apparatus of the type for which a standard is promulgated in this part, and the construction or modification of which was commenced before the date of proposal of that standard; or any apparatus which could be altered in such a way as to be of that type.

Isokinetic sampling means sampling in which the linear velocity of the gas entering the sampling nozzle is equal to that of the undisturbed gas stream at the sample point.

Issuance of a part 70 permit will occur, if the State is the permitting authority, in accordance with the requirements of part 70 of this chapter and the applicable, approved State permit program. When the EPA is the permitting authority, issuance of a Title V permit occurs immediately after the EPA takes final action on the final permit.

Malfunction means any sudden, infrequent, and not reasonably preventable failure of air pollution control equipment, process equipment, or a process to operate in a normal or usual manner. Failures that are caused in part by poor maintenance or careless operation are not malfunctions.

Modification means any physical change in, or change in the method of operation of, an existing facility which increases the amount of any air pollutant (to which a standard applies) emitted into the atmosphere by that facility or which results in the emission of any air pollutant (to which a standard applies) into the atmosphere not previously emitted.

Monitoring device means the total equipment, required under the monitoring of operations sections in applicable subparts, used to measure and record (if applicable) process parameters.

Nitrogen oxides means all oxides of nitrogen except nitrous oxide, as measured by test methods set forth in this part.

One-hour period means any 60-minute period commencing on the hour.

Opacity means the degree to which emissions reduce the transmission of light and obscure the view of an object in the background.

Owner or operator means any person who owns, leases, operates, controls, or supervises an affected facility or a stationary source of which an affected facility is a part.

Part 70 permit means any permit issued, renewed, or revised pursuant to part 70 of this chapter.

Particulate matter means any finely divided solid or liquid material, other than uncombined water, as measured by the reference methods specified under each applicable subpart, or an equivalent or alternative method.

Permit program means a comprehensive State operating permit system established pursuant to title V of the Act (42 U.S.C. 7661) and regulations codified in part 70 of this chapter and applicable State regulations, or a comprehensive Federal operating permit system established pursuant to title V of the Act and regulations codified in this chapter.

Permitting authority means:

(1) The State air pollution control agency, local agency, other State agency, or other agency authorized by the Administrator to carry out a permit program under part 70 of this chapter; or

(2) The Administrator, in the case of EPA-implemented permit programs under title V of the Act (42 U.S.C. 7661).

Proportional sampling means sampling at a rate that produces a constant ratio of sampling rate to stack gas flow rate.

Reactivation of a very clean coal-fired electric utility steam generating unit means any physical change or change in the method of operation associated with the commencement of commercial operations by a coal-fired utility unit after a period of discontinued operation where the unit:

(1) Has not been in operation for the two-year period prior to the enactment of the Clean Air Act Amendments of 1990, and the emissions from such unit continue to be carried in the permitting authority's emissions inventory at the time of enactment;

(2) Was equipped prior to shut-down with a continuous system of emissions control that achieves a removal efficiency for sulfur dioxide of no less than 85 percent and a removal efficiency for particulates of no less than 98 percent;

(3) Is equipped with low-NO_x burners prior to the time of commencement of operations following reactivation; and

(4) Is otherwise in compliance with the requirements of the Clean Air Act.

Reference method means any method of sampling and analyzing for an air pollutant as specified in the applicable subpart.

Repowering means replacement of an existing coal-fired boiler with one of the following clean coal technologies: atmospheric or pressurized fluidized bed combustion, integrated gasification combined cycle, magnetohydrodynamics, direct and indirect coal-fired turbines, integrated gasification fuel cells, or as determined by the Administrator, in consultation with the Secretary of Energy, a derivative of one or more of these technologies, and any other technology capable of controlling multiple combustion emissions simultaneously with improved boiler or generation efficiency and with significantly greater waste reduction relative to the performance of technology in widespread commercial use as of November 15, 1990. Repowering shall also include any oil and/or gas-fired unit which has been awarded clean coal technology demonstration funding as of January 1, 1991, by the Department of Energy.

Run means the net period of time during which an emission sample is collected. Unless otherwise specified, a run may be either intermittent or continuous within the limits of good engineering practice.

Shutdown means the cessation of operation of an affected facility for any purpose.

Six-minute period means any one of the 10 equal parts of a one-hour period.

Standard means a standard of performance proposed or promulgated under this part.

Standard conditions means a temperature of 293 K (68F) and a pressure of 101.3 kilopascals (29.92 in Hg).

Startup means the setting in operation of an affected facility for any purpose.

State means all non-Federal authorities, including local agencies, interstate associations, and State-wide programs, that have delegated authority to implement: (1) The provisions of this part; and/or (2) the permit program established under part 70 of this chapter. The term State shall have its conventional meaning where clear from the context.

Stationary source means any building, structure, facility, or installation which emits or may emit any air pollutant.

Title V permit means any permit issued, renewed, or revised pursuant to Federal or State regulations established to implement title V of the Act (42 U.S.C. 7661). A title V permit issued by a State permitting authority is called a part 70 permit in this part.

Volatile Organic Compound means any organic compound which participates in atmospheric photochemical reactions; or which is measured by a reference method, an equivalent method, an alternative method, or which is determined by procedures specified under any subpart.

[44 FR 55173, Sept. 25, 1979, as amended at 45 FR 5617, Jan. 23, 1980; 45 FR 85415, Dec. 24, 1980; 54 FR 6662, Feb. 14, 1989; 55 FR 51382, Dec. 13, 1990; 57 FR 32338, July 21, 1992; 59 FR 12427, Mar. 16, 1994]

§ 60.3 Units and abbreviations.

Used in this part are abbreviations and symbols of units of measure. These are defined as follows:

(a) System International (SI) units of measure:

A—ampere
g—gram
Hz—hertz
J—joule
K—degree Kelvin
kg—kilogram
m—meter
m^3—cubic meter
mg—milligram—10^{-3} gram
mm—millimeter—10^{-3} meter
Mg—megagram—10^6 gram
mol—mole
N—newton
ng—nanogram—10^{-9} gram
nm—nanometer—10^{-9} meter
Pa—pascal
s—second
V—volt
W—watt
Ω—ohm
µg—microgram—10^{-6} gram

(b) Other units of measure:

Btu—British thermal unit
°C—degree Celsius (centigrade)
cal—calorie
cfm—cubic feet per minute
cu ft—cubic feet
dcf—dry cubic feet
dcm—dry cubic meter
dscf—dry cubic feet at standard conditions
dscm—dry cubic meter at standard conditions
eq—equivalent
°F—degree Fahrenheit
ft—feet
gal—gallon
gr—grain
g-eq—gram equivalent
hr—hour
in—inch
k—1,000
l—liter
lpm—liter per minute
lb—pound
meq—milliequivalent
min—minute
ml—milliliter
mol. wt.—molecular weight
ppb—parts per billion
ppm—parts per million
psia—pounds per square inch absolute
psig—pounds per square inch gage
°R—degree Rankine
scf—cubic feet at standard conditions
scfh—cubic feet per hour at standard conditions
scm—cubic meter at standard conditions
sec—second
sq ft—square feet
std—at standard conditions

(c) Chemical nomenclature:

CdS—cadmium sulfide
CO—carbon monoxide
CO_2—carbon dioxide
HCl—hydrochloric acid
Hg—mercury
H_2O—water
H_2S—hydrogen sulfide
H_2SO_4—sulfuric acid
N_2—nitrogen
NO—nitric oxide
NO_2—nitrogen dioxide
NO_x—nitrogen oxides
O_2—oxygen
SO_2—sulfur dioxide
SO_3—sulfur trioxide
SO_x—sulfur oxides

(d) Miscellaneous:

A.S.T.M.—American Society for Testing and Materials

[42 FR 37000, July 19, 1977; 42 FR 38178, July 27, 1977]

§ 60.4 Address.

(a) All requests, reports, applications, submittals, and other communications to the Administrator pursuant to this part shall be submitted in duplicate to the appropriate Regional Office of the U.S. Environmental Protection Agency to the attention of the Director of the Division indicated in the following list of EPA Regional Offices.

Region I (Connecticut, Maine, Massachusetts, New Hampshire, Rhode Island, Vermont), Director, Air Management Division, U.S. Environmental Protection Agency, John F. Kennedy Federal Building, Boston, MA 02203.

Region II (New Jersey, New York, Puerto Rico, Virgin Islands), Director, Air and Waste Management Division, U.S. Environmental Protection Agency, Federal Office Building, 26 Federal Plaza (Foley Square), New York, NY 10278.

Region III (Delaware, District of Columbia, Maryland, Pennsylvania, Virginia, West Virginia), Director, Air and Waste Management Division, U.S. Environmental Protection Agency, Curtis Building, Sixth and Walnut Streets, Philadelphia, PA 19106.

Region IV (Alabama, Florida, Georgia, Kentucky, Mississippi, North Carolina, South Carolina, Tennessee), Director, Air and Waste Management Division, U.S. Environmental Protection Agency, 345 Courtland Street, NE., Atlanta, GA 30365.

Region V (Illinois, Indiana, Michigan, Minnesota, Ohio, Wisconsin), Director, Air and

Radiation Division, U.S. Environmental Protection Agency, 77 West Jackson Boulevard, Chicago, IL 60604–3590.

Region VI (Arkansas, Louisiana, New Mexico, Oklahoma, Texas); Director; Air, Pesticides, and Toxics Division; U.S. Environmental Protection Agency, 1445 Ross Avenue, Dallas, TX 75202.

Region VII (Iowa, Kansas, Missouri, Nebraska), Director, Air and Toxics Division, U.S. Environmental Protection Agency, 726 Minnesota Avenue, Kansas City, KS 66101.

Region VIII (Colorado, Montana, North Dakota, South Dakota, Utah, Wyoming), Director, Air and Waste Management Division, U.S. Environmental Protection Agency, 1860 Lincoln Street, Denver, CO 80295.

Region IX (American Samoa, Arizona, California, Guam, Hawaii, Nevada), Director, Air and Waste Management Division, U.S. Environmental Protection Agency, 215 Fremont Street, San Francisco, CA 94105.

Region X (Alaska, Oregon, Idaho, Washington), Director, Air and Waste Management Division, U.S. Environmental Protection Agency, 1200 Sixth Avenue, Seattle, WA 98101.

(b) Section 111(c) directs the Administrator to delegate to each State, when appropriate, the authority to implement and enforce standards of performance for new stationary sources located in such State. All information required to be submitted to EPA under paragraph (a) of this section, must also be submitted to the appropriate State Agency of any State to which this authority has been delegated (provided, that each specific delegation may except sources from a certain Federal or State reporting requirement). The appropriate mailing address for those States whose delegation request has been approved is as follows:

(A) [Reserved]

(B) State of Alabama, Air Pollution Control Division, Air Pollution Control Commission, 645 S. McDonough Street, Montgomery, AL 36104.

(C) State of Alaska, Department of Environmental Conservation, Pouch O, Juneau, AK 99811.

(D) Arizona:

Arizona Department of Health Services, 1740 West Adams Street, Phoenix, AZ 85007.

Maricopa County Department of Health Services, Bureau of Air Pollution Control, 1825 East Roosevelt Street, Phoenix, AZ 85006.

Pima County Health Department, Air Quality Control District, 151 West Congress, Tucson, AZ 85701.

Pima County Air Pollution Control District, 151 West Congress Street, Tucson, AZ 85701.

(1) The following table lists the specific source and pollutant categories that have been delegated to the air pollution control agencies in Arizona. A star (*) is used to indicate each category that has been delegated.

DELEGATION STATUS OF NEW SOURCE PERFORMANCE STANDARDS (NSPS) FOR ARIZONA

AIR POLLUTION CONTROL AGENCY	POLLUTANT CATEGORY	A	D	Da	E	F	G	H	I	J	K	Ka	L	M	N	O	P	Q	R	S	T	U	V	W	X	Y	Z
	General Provisions		Fossil Fuel Fired Steam Generating Units Constructed After 8/17/71	Electric Utility Steam Generating Units Constructed After 9/18/78	Incinerators	Portland Cement Plants	Nitric Acid Plants	Sulfuric Acid Plants	Asphalt Concrete Plants	Petroleum Refineries	Storage Vessels for Petroleum Liquids Constructed After 6/11/73 Prior to 5/19/78	Storage Vessels For Petroleum Liquids Constructed After 5/18/78	Secondary Lead Smelters	Secondary Brass And Bronze Ingot Production	Iron And Steel Plants	Sewage Treatment Plants	Primary Copper Smelters	Primary Zinc Smelters	Primary Lead Smelters	Primary Aluminum Reduction Plants	Phosphate Fertilizer Industry: Wet Process Phosphoric Acid Plants	Phosphate Fertilizer Industry: Super Phosphoric Acid Plants	Phosphate Fertilizer Industry: Diammonium Phosphate Plant	Phosphate Fertilizer Industry: Triple Super Phosphate Plant	Phosphate Fertilizer Industry: Granular Triple Super Phosphate Storage Facilities	Coal Preparation Plants	Ferroalloy Production Facilities
ARIZONA			*		*	*	*	*	*	*	*		*	*	*	*	*	*	*	*	*	*	*	*	*	*	*
Maricopa			*	*	*	*	*	*	*	*	*	*	*	*	*	*	*	*	*	*	*	*	*	*	*	*	*
Pima			*	*	*	*	*	*	*	*	*	*	*	*	*	*	*	*	*	*	*	*	*	*	*	*	*

* indicates delegation

DELEGATION STATUS OF NEW SOURCE PERFORMANCE STANDARDS (NSPS) FOR NEVADA											NATIONAL EMISSION STANDARDS FOR HAZARDOUS AIR POLLUTANTS (NESHAPS					
AIR POLLUTION CONTROL AGENCY	Steel Plants: Electric Arc Furnaces	Kraft Pulp Mills	Glass Manufacturing Plants	Grain Elevators	Stationary Gas Turbines	Lime Manufacturing Plants	Lead - Acid Battery Manufacturing Plants	Automobile & Light Duty Surface Coating Operations	Phosphate Rock Plants	Ammonium Sulfate Manufacturing	General Provisions	Asbestos	Beryllium	Beryllium Rocket Motor Firing	Mercury	Vinyl Chloride
POLLUTANT CATEGORY	AA	BB	CC	DD	GG	HH	KK	MM	NN	PP	A	B	C	D	E	F
NEVADA	*	*	*	*	*	*	*	*	*	*		*	*	*	*	*
Clark				*	*	*		*			*	*	*	*	*	*
Washoe												*	*		*	

* indicates delegation

(E) State of Arkansas: Chief, Division of Air Pollution Control, Arkansas Department of Pollution Control and Ecology, 8001 National Drive, P.O. Box 9583, Little Rock, AR 72209.

(F) California:

Amador County Air Pollution Control District, P.O. Box 430, 810 Court Street, Jackson, CA 95642

Bay Area Air Pollution Control District, 939 Ellis Street, San Francisco, CA 94109.

Butte County Air Pollution Control District, P.O. Box 1229, 316 Nelson Avenue, Oroville, CA 95965

Calaveras County Air Pollution Control District, Government Center, El Dorado Road, San Andreas, CA 95249

Colusa County Air Pollution Control District, 751 Fremont Street, Colusa, CA 95952

El Dorado Air Pollution Control District, 330 Fair Lane, Placerville, CA 95667

Fresno County Air Pollution Control District, 1221 Fulton Mall, Fresno, CA 93721

Glenn County Air Pollution Control District, P.O. Box 351, 720 North Colusa Street, Willows, CA 95988

Great Basin Unified Air Pollution Control District, 157 Short Street, Suite 6, Bishop, CA 93514

Imperial County Air Pollution Control District, County Services Building, 939 West Main Street, El Centro, CA 92243

Kern County Air Pollution Control District, 1601 H Street, Suite 250, Bakersfield, CA 93301

Kings County Air Pollution Control District, 330 Campus Drive, Hanford, CA 93230

Lake County Air Pollution Control District, 255 North Forbes Street, Lakeport, CA 95453

Lassen County Air Pollution Control District, 175 Russell Avenue, Susanville, CA 96130

Madera County Air Pollution Control District, 135 W. Yosemite Avenue, Madera, CA 93637.

Mariposa County Air Pollution Control District, Box 5, Mariposa, CA 95338

Mendocino County Air Pollution Control District, County Courthouse, Ukiah, CA 95482.

Merced County Air Pollution Control District, P.O. Box 471, 240 East 15th Street, Merced, CA 95340

Modoc County Air Pollution Control District, 202 West 4th Street, Alturas, CA 96101

Monterey Bay Unified Air Pollution Control, 1164 Monroe Street, Suite 10, Salinas, CA 93906

Nevada County Air Pollution Control District, H.E.W. Complex, Nevada City, CA 95959

North Coast Unified Air Quality Management District, 5630 South Broadway, Eureka, CA 95501

Northern Sonoma County Air Pollution Control District, 134 ''A'' Avenue, Auburn, CA 95448

Placer County Air Pollution Control District, 11491 ''B'' Avenue, Auburn, CA 95603

Plumas County Air Pollution Control District, P.O. Box 480, Quincy, CA 95971

Sacramento County Air Pollution Control District, 3701 Branch Center Road, Sacramento, CA 95827.

San Bernardino County Air Pollution Control District, 15579–8th, Victorville, CA 92392

San Diego County Air Pollution Control District, 9150 Chesapeake Drive, San Diego, CA 92123.

San Joaquin County Air Pollution Control District, 1601 E. Hazelton Street (P.O. Box 2009) Stockton, CA 95201.

San Luis Obispo County Air Pollution Control District, P.O. Box 637, San Luis Obispo, CA 93406

Santa Barbara County Air Pollution Control District, 315 Camino del Rimedio, Santa Barbara, CA 93110

Shasta County Air Pollution Control District, 2650 Hospital Lane, Redding, CA 96001

Sierra County Air Pollution Control District, P.O. Box 286, Downieville, CA 95936

Siskiyou County Air Pollution Control District, 525 South Foothill Drive, Yreka, CA 96097

South Coast Air Quality Management District, 9150 Flair Drive, El Monte, CA 91731

Stanislaus County Air Pollution Control District, 1030 Scenic Drive, Modesto, CA 95350

Sutter County Air Pollution Control District, Sutter County Office Building, 142 Garden Highway, Yuba City, CA 95991

Tehama County Air Pollution Control District, P.O. Box 38, 1760 Walnut Street, Red Bluff, CA 96080

Tulare County Air Pollution Control District, County Civic Center, Visalia, CA 93277

Tuolumne County Air Pollution Control District, 9 North Washington Street, Sonora, CA 95370

Ventura County Air Pollution Control District, 800 South Victoria Avenue, Ventura, CA 93009

Yolo-Solano Air Pollution Control District, P.O. Box 1006, 323 First Street, #5, Woodland, CA 95695

(1) The following table lists the specific source and pollutant categories that have been delegated to the air pollution control agencies in California. A star (*) is used to indicate each category that has been delegated.

DELEGATION STATUS OF NEW SOURCE PERFORMANCE STANDARDS (NSPS) FOR CALIFORNIA

AIR POLLUTION CONTROL DISTRICT	General Provisions	Fossil Fuel Fired Steam Generating Units Constructed After 8/17/71	Electric Utility Steam Generating Units Constructed After 9/18/78	Incinerators	Portland Cement Plants	Nitric Acid Plants	Sulfuric Acid Plants	Asphalt Concrete Plants	Petroleum Refineries	Storage Vessels for Petroleum Liquids Constructed After 6/11/73 Prior to 5/19/78	Storage Vessels For Petroleum Liquids Constructed After 5/18/78	Secondary Lead Smelters	Secondary Brass And Bronze Ingot Production	Iron And Steel Plants	Sewage Treatment Plants	Primary Copper Smelters	Primary Zinc Smelters	Primary Lead Smelters	Primary Aluminum Reduction Plants	Phosphate Fertilizer Industry: Wet Process Phosphoric Acid Plants	Phosphate Fertilizer Industry: Super Phosphoric Acid Plants	Phosphate Fertilizer Industry: Diammonium Phosphate Plant	Phosphate Fertilizer Industry: Triple Super Phosphate Plant	Phosphate Fertilizer Industry: Granular Triple Super Phosphate Storage Facilities	Coal Preparation Plants	Ferralloy Production Facilities
POLLUTANT CATEGORY	A	D	Da	E	F	G	H	I	J	K	Ka	L	M	N	O	P	Q	R	S	T	U	V	W	X	Y	Z
Bay Area	*	*	*	*	*	*	*	*	*	*		*	*	*	*	*	*	*	*	*	*	*	*	*	*	*
Del Norte	*	*	*	*	*	*	*	*	*	*	*	*	*	*	*	*	*	*	*	*	*	*	*	*	*	*
Fresno	*	*		*	*	*	*	*	*	*		*	*	*	*	*	*	*	*	*	*	*	*	*	*	*
Great Basin		*		*	*	*	*	*	*	*		*	*	*	*	*	*	*	*	*	*	*	*	*	*	*
Humboldt	*	*	*	*	*	*	*	*	*	*	*	*	*	*	*	*	*	*	*	*	*	*	*	*	*	*
Kern	*	*	*	*	*	*	*	*	*	*	*	*	*	*	*	*	*	*	*	*	*	*	*	*	*	*
Kings		*		*	*	*	*	*	*	*		*	*	*	*	*	*	*	*	*	*	*	*	*	*	*
Lake	*	*		*	*	*	*	*	*	*		*	*	*	*					*	*	*	*	*		
Madera		*		*	*	*	*	*	*	*		*	*	*	*	*	*	*	*	*	*	*	*	*	*	*
Mendocino	*	*	*	*	*	*	*	*	*	*	*	*	*	*	*	*	*	*	*	*	*	*	*	*	*	*
Merced		*		*	*	*	*	*	*	*		*	*	*	*	*	*	*	*	*	*	*	*	*	*	*
Modoc		*		*	*			*																		
Monterey Bay	*	*		*	*			*		*					*	*	*	*	*	*	*	*	*	*	*	*
Northern Sonoma	*	*	*	*	*	*	*	*	*	*	*	*	*	*	*	*	*	*	*	*	*	*	*	*	*	*
Sacramento								*		*					*											
San Bernardino		*		*	*	*	*	*	*	*		*	*	*	*					*	*	*	*	*	*	
San Diego	*	*	*	*				*	*	*	*	*	*													
San Joaquin	*	*	*	*	*	*	*	*	*	*	*	*	*	*	*	*	*	*	*	*	*	*	*	*	*	*
San Luis Obispo	*	*	*	*	*	*	*	*	*	*	*	*	*	*	*	*	*	*	*	*	*	*	*	*	*	*
Santa Barbara	*	*		*	*	*	*	*	*	*		*	*	*	*	*	*	*	*	*	*	*	*	*	*	*
Shasta		*		*	*	*	*	*	*	*		*	*	*	*	*	*	*	*	*	*	*	*	*	*	*
South Coast	*	*		*	*	*	*	*	*	*	*	*	*	*	*					*	*	*	*	*	*	
Stanislaus		*		*	*	*	*	*	*	*		*	*	*	*	*	*	*	*	*	*	*	*	*	*	*
Trinity	*	*	*	*	*	*	*	*	*	*	*	*	*	*	*	*	*	*	*	*	*	*	*	*	*	*
Tulare	*	*	*	*	*	*	*	*	*	*	*	*	*	*	*	*	*	*	*	*	*	*	*	*	*	*
Ventura	*			*		*	*	*	*	*		*	*	*	*					*	*	*	*	*	*	*
Yolo-Solano		*						*		*																

* indicates delegation

DELEGATION STATUS OF NEW SOURCE PERFORMANCE STANDARDS (NSPS) FOR CALIFORNIA											NATIONAL EMISSION STANDARDS FOR HAZARDOUS AIR POLLUTANTS (NESHAPS)					
AIR POLLUTION CONTROL DISTRICT	Steel Plants: Electric Arc Furnaces	Kraft Pulp Mills	Glass Manufacturing Plants	Grain Elevators	Stationary Gas Turbines	Lime Manufacturing Plants	Lead - Acid Battery Manufacturing Plants	Automobile & Light Duty Surface Coating Operations	Phosphate Rock Plants	Ammonium Sulfate Manufacturing	General Provisions	Asbestos	Beryllium	Beryllium Rocket Motor Firing	Mercury	Vinyl Chloride
POLLUTANT CATEGORY	AA	BB	CC	DD	GG	HH	KK	MM	NN	PP	A	B	C	D	E	F
Bay Area	*	*		*	*	*				*	*	*	*	*	*	*
Del Norte	*	*	*	*	*	*		*		*	*	*	*	*	*	*
Fresno	*	*		*		*					*	*	*	*	*	*
Great Basin	*										*	*	*	*	*	
Humboldt	*	*	*	*	*	*		*		*	*	*	*	*	*	*
Kern	*	*	*	*	*	*		*		*	*	*	*	*	*	*
Kings	*	*		*		*					*	*	*	*	*	
Lake	*										*	*	*	*	*	
Madera	*	*		*		*						*	*	*	*	*
Mendocino	*	*	*	*	*	*		*		*	*	*	*	*	*	*
Merced	*										*	*	*	*	*	
Modoc											*	*	*	*	*	
Monterey Bay	*										*	*	*	*	*	
Northern Sonoma	*	*	*	*	*	*		*		*	*	*	*	*	*	*
Sacramento												*				*
San Bernardino	*										*	*	*	*	*	
San Diego			*	*	*						*	*	*	*	*	*
San Joaquin	*	*	*	*	*			*		*	*	*	*	*	*	*
San Luis Obispo	*	*	*	*	*	*		*		*	*	*	*	*	*	*
Santa Barbara	*					*						*	*	*	*	
Shasta	*	*		*		*						*	*	*	*	*
South Coast	*			*	*	*				*	*	*	*	*	*	*
Stanislaus	*											*	*	*	*	
Trinity	*	*	*	*	*	*		*		*	*	*	*	*	*	*
Tulare	*	*	*	*	*	*	*	*	*	*	*	*	*	*	*	*
Ventura	*										*	*	*	*	*	
Yolo-Solano	*											*			*	

* indicates delegation

(G) State of Colorado, Department of Health, Air Pollution Control Division, 4210 East 11th Avenue, Denver, CO 80220.

EDITORIAL NOTE: For a table listing Region VIII's NSPS delegation status, see paragraph (c) of this section.

(H) State of Connecticut, Bureau of Air Management, Department of Environmental Protection, State Office Building, 165 Capitol Avenue, Hartford, CT 06106.

(I) State of Delaware, Delaware Department of Natural Resources and Environmental Control, 89 Kings Highway, P.O. Box 1401, Dover, DE 19901

(J) District of Columbia, Department of Consumer and Regulatory Affairs, 5000 Overlook Avenue SW., Washington DC 20032.

(K) Bureau of Air Quality Management, Department of Environmental Regulation, Twin Towers Office Building, 2600 Blair Stone Road, Tallahassee, FL 32301.

(L) State of Georgia, Environmental Protection Division, Department of Natural Resources, 270 Washington Street, SW., Atlanta, GA 30334.

(M) Hawaii Department of Health, 1250 Punchbowl Street, Honolulu, HI 96813

Hawaii Department of Health (mailing address), Post Office Box 3378, Honolulu, HI 96801

(N) State of Idaho, Department of Health and Welfare, Statehouse, Boise, ID 83701.

(O) State of Illinois, Bureau of Air, Division of Air Pollution Control, Illinois Environmental Protection Agency, 2200 Churchill Road, Springfield, IL 62794–9276.

(P) State of Indiana, Indiana Department of Environmental Management, 100 North Senate Avenue, P.O. Box 6015, Indianapolis, Indiana 46206–6015.

(Q) State of Iowa: Iowa Department of Natural Resources, Environmental Protection Division, Henry A. Wallace Building, 900 East Grand, Des Moines, IO 50319.

(R) State of Kansas: Kansas Department of Health and Environment, Bureau of Air Quality and Radiation Control, Forbes Field, Topeka, KS 66620.

(S) Division of Air Pollution Control, Department for Natural Resources and Environmental Protection, U.S. 127, Frankfort, KY 40601.

(T) State of Louisiana: Program Administrator, Air Quality Division, Louisiana Department of Environmental Quality, P.O. Box 44096, Baton Rouge, LA 70804.

(U) State of Maine, Bureau of Air Quality Control, Department of Environmental Protection, State House, Station No. 17, Augusta, ME 04333.

(V) State of Maryland: Bureau of Air Quality and Noise Control, Maryland State Department of Health and Mental Hygiene, 201 West Preston Street, Baltimore, MD 21201.

(W) Commonwealth of Massachusetts, Division of Air Quality Control, Department of Environmental Protection, One Winter Street, 7th floor, Boston, MA 02108.

(X) State of Michigan, Air Quality Division, Michigan Department of Environmental Quality, P.O. Box 30260, Lansing, Michigan 48909.

(Y) Minnesota Pollution Control Agency, Division of Air Quality, 520 Lafayette Road, St. Paul, MN 55155.

(Z) Bureau of Pollution Control, Department of Natural Resources, P.O. Box 10385, Jackson, MS 39209.

(AA) State of Missouri: Missouri Department of Natural Resources, Division of Environmental Quality, P.O. Box 176, Jefferson City, MO 65102.

(BB) State of Montana, Department of Health and Environmental Services, Air Quality Bureau, Cogswell Building, Helena, MT 59601.

EDITORIAL NOTE: For a table listing Region VIII's NSPS delegation status, see paragraph (c) of this section.

(CC) State of Nebraska, Nebraska Department of Environmental Control, P.O. Box 94877, State House Station, Lincoln, NE 68509.

Lincoln-Lancaster County Health Department, Division of Environmental Health, 2200 St. Marys Avenue, Lincoln, NE 68502

(DD) Nevada:

Nevada Department of Conservation and Natural Resources, Division of Environmental Protection, 201 South Fall Street, Carson City, NV 89710.

Clark County County District Health Department, Air Pollution Control Division, 625 Shadow Lane, Las Vegas, NV 89106.

Washoe County District Health Department, Division of Environmental Protection, 10 Kirman Avenue, Reno, NV 89502.

(1) The following table lists the specific source and pollutant categories that have been delegated to the air pollution control agencies in Nevada. A star (*) is used to indicate each category that has been delegated.

DELEGATION STATUS OF NEW SOURCE PERFORMANCE STANDARDS (NSPS) FOR NEVADA

AIR POLLUTION CONTROL AGENCY	POLLUTANT CATEGORY	A	D	Da	E	F	G	H	I	J	K	Ka	L	M	N	O	P	Q	R	S	T	U	V	W	X	Y	Z
	General Provisions		Fossil Fuel Fired Steam Generating Units Constructed After 8/17/71	Electric Utility Steam Generating Units Constructed After 9/18/78	Incinerators	Portland Cement Plants	Nitric Acid Plants	Sulfuric Acid Plants	Asphalt Concrete Plants	Petroleum Refineries	Storage Vessels for Petroleum Liquids Constructed After 6/11/73 Prior to 5/19/78	Storage Vessels for Petroleum Liquids Constructed After 5/18/78	Secondary Lead Smelters	Secondary Brass and Bronze Ingot Production	Iron and Steel Plants	Sewage Treatment Plants	Primary Copper Smelters	Primary Zinc Smelters	Primary Lead Smelters	Primary Aluminum Reduction Plants	Phosphate Fertilizer Industry: Wet Process Phosphoric Acid Plants	Phosphate Fertilizer Industry: Super Phosphoric Acid Plants	Phosphate Fertilizer Industry: Diammonium Phosphate Plant	Phosphate Fertilizer Industry: Triple Super Phosphate Plant	Phosphate Fertilizer Industry: Granular Triple Super Phosphate Storage Facilities	Coal Preparation Plants	Ferroalloy Production Facilities
NEVADA			*	*	*	*	*	*	*	*	*	*	*	*	*	*	*	*	*	*	*	*	*	*	*		*
Clark		*	*		*	*			*		*	*	*			*	*	*								*		
Washoe			*		*	*			*		*					*											

* indicates delegation

	Subpart	State			
		New Jersey	New York	Puerto Rico	Virgin Islands
S	Primary Aluminum Reduction Plants	X	X	X	X
T	Phosphate Fertilizer Industry: Wet Process Phosphoric Acid Plants.	X	X	X	X
U	Phosphate Fertilizer Industry: Superphosphoric Acid Plants	X	X	X	X
V	Phosphate Fertilizer Industry: Diammonium Phosphate Plants	X	X	X	X
W	Phosphate Fertilizer Industry: Triple Superphosphate Plants	X	X	X	X
X	Phosphate Fertilizer Industry: Granular Triple Superphosphate	X	X	X	X
Y	Coal Preparation Plants	X	X	X	X
Z	Ferroally Production Facilities	X	X	X	X
AA	Steel Plants: Electric Arc Furnaces	X	X	X	X
AAa	Electric Arc Furnaces and Argon-Oxygen Decarburization Vessels in Steel Plants.	X	X	X	
BB	Kraft Pulp Mills	X	X	X	
CC	Glass Manufacturing Plants	X	X	X	
DD	Grain Elevators	X	X	X	
EE	Surface Coating of Metal Furniture	X	X	X	
GG	Stationary Gas Turbines	X	X	X	
HH	Lime Plants	X	X	X	
KK	Lead Acid Battery Manufacturing Plants	X	X		
LL	Metallic Mineral Processing Plants	X	X	X	
MM	Automobile and Light-Duty Truck Surface Coating Operations	X	X		
NN	Phosphate Rock Plants	X	X		
PP	Ammonium Sulfate Manufacturing Plants	X	X		
QQ	Graphic Art Industry Publication Rotogravure Printing	X	X	X	X
RR	Pressure Sensitive Tape and Label Surface Coating Operations.	X	X	X	
SS	Industrial Surface Coating: Large Appliances	X	X	X	
TT	Metal Coil Surface Coating	X	X	X	
UU	Asphalt Processing and Asphalt Roofing Manufacture	X	X	X	
VV	Equipment Leaks of Volatile Organic Compounds in Synthetic Organic Chemical Manufacturing Industry.	X		X	
WW	Beverage Can Surface Coating Industry	X	X	X	
XX	Bulk Gasoline Terminals	X	X	X	
FFF	Flexible Vinyl and Urethane Coating and Printing	X	X	X	
GGG	Equipment Leaks of VOC in Petroleum Refineries	X		X	
HHH	Synthetic Fiber Production Facilities	X		X	
JJJ	Petroleum Dry Cleaners	X	X	X	
KKK	Equipment Leaks of VOC from Onshore Natural Gas Processing Plants.				
LLL	Onshore Natural Gas Processing Plants; SO_2 Emissions		X		
OOO	Nonmetallic Mineral Processing Plants		X	X	
PPP	Wool Fiberglass Insulation Manufacturing Plants		X	X	

(EE) State of New Hampshire, Air Resources Division, Department of Environmental Services, 64 North Main Street, Caller Box 2033, Concord, NH 03302–2033.

(FF) State of New Jersey: New Jersey Department of Environmental Protection, Division of Environmental Quality, Enforcement Element, John Fitch Plaza, CN–027, Trenton, NJ 08625.

(1) The following table lists the specific source and pollutant categories that have been delegated to the states in Region II. The (X) symbol is used to indicate each category that has been delegated.

	Subpart	State			
		New Jersey	New York	Puerto Rico	Virgin Islands
D	Fossil-Fuel Fired Steam Generators for Which Construction Commenced After August 17, 1971 (Steam Generators and Lignite Fired Steam Generators).	X	X	X	X
Da	Electric Utility Steam Generating Units for Which Construction Commenced After September 18, 1978.	X		X	
Db	Industrial-Commercial-Institutional Steam Generating Units	X	X	X	X
E	Incinerators	X	X	X	X
F	Portland Cement Plants	X	X	X	X
G	Nitric Acid Plants	X	X	X	X
H	Sulfuric Acid Plants	X	X	X	X
I	Asphalt Concrete Plants	X	X	X	X
J	Petroleum Refineries—(All Categories)	X	X	X	X
K	Storage Vessels for Petroleum Liquids Constructed After June 11, 1973, and prior to May 19, 1978.	X	X	X	X
Ka	Storage Vessels for Petroleum Liquids Constructed After May 18, 1978.	X	X	X	
L	Secondary Lead Smelters	X	X	X	X
M	Secondary Brass and Bronze Ingot Production Plants	X	X	X	X
N	Iron and Steel Plants	X	X	X	X
O	Sewage Treatment Plants	X	X	X	X
P	Primary Copper Smelters	X	X	X	X
Q	Primary Zinc Smelters	X	X	X	X
R	Primary Lead Smelters	X	X	X	X

	Subpart	State			
		New Jersey	New York	Puerto Rico	Virgin Islands
S	Primary Aluminum Reduction Plants	X	X	X	X
T	Phosphate Fertilizer Industry: Wet Process Phosphoric Acid Plants.	X	X	X	X
U	Phosphate Fertilizer Industry: Superphosphoric Acid Plants	X	X	X	X
V	Phosphate Fertilizer Industry: Diammonium Phosphate Plants	X	X	X	X
W	Phosphate Fertilizer Industry: Triple Superphosphate Plants	X	X	X	X
X	Phosphate Fertilizer Industry: Granular Triple Superphosphate	X	X	X	X
Y	Coal Preparation Plants	X	X	X	X
Z	Ferroally Production Facilities	X	X	X	X
AA	Steel Plants: Electric Arc Furnaces	X	X	X	X
AAa	Electric Arc Furnaces and Argon-Oxygen Decarburization Vessels in Steel Plants.	X	X	X	
BB	Kraft Pulp Mills	X	X	X	
CC	Glass Manufacturing Plants	X	X	X	
DD	Grain Elevators	X	X	X	
EE	Surface Coating of Metal Furniture	X	X	X	
GG	Stationary Gas Turbines	X	X	X	
HH	Lime Plants	X	X	X	
KK	Lead Acid Battery Manufacturing Plants	X	X		
LL	Metallic Mineral Processing Plants	X	X	X	
MM	Automobile and Light-Duty Truck Surface Coating Operations	X	X		
NN	Phosphate Rock Plants	X	X		
PP	Ammonium Sulfate Manufacturing Plants	X	X		
QQ	Graphic Art Industry Publication Rotogravure Printing	X	X	X	X
RR	Pressure Sensitive Tape and Label Surface Coating Operations.	X	X	X	
SS	Industrial Surface Coating: Large Appliances	X	X	X	
TT	Metal Coil Surface Coating	X	X	X	
UU	Asphalt Processing and Asphalt Roofing Manufacture	X	X	X	
VV	Equipment Leaks of Volatile Organic Compounds in Synthetic Organic Chemical Manufacturing Industry.	X		X	
WW	Beverage Can Surface Coating Industry	X	X	X	
XX	Bulk Gasoline Terminals	X	X	X	
FFF	Flexible Vinyl and Urethane Coating and Printing	X	X	X	
GGG	Equipment Leaks of VOC in Petroleum Refineries	X		X	
HHH	Synthetic Fiber Production Facilities	X		X	
JJJ	Petroleum Dry Clearners	X	X	X	
KKK	Equipment Leaks of VOC from Onshore Natural Gas Processing Plants.				
LLL	Onshore Natural Gas Processing Plants; SO_2 Emissions		X		
OOO	Nonmetallic Mineral Processing Plants		X	X	
PPP	Wool Fiberglass Insulation Manufacturing Plants		X	X	

(GG) State of New Mexico: Director, New Mexico Environmental Improvement Division, Health and Environment Department, 1190 St. Francis Drive, Santa Fe, NM 87503.

(i) The City of Albuquerque and Bernalillo County: Director, The Albuquerque Environmental Health Department, The City of Albuquerque, P.O. Box 1293, Albuquerque, NM 87103.

(HH) New York: New York State Department of Environmental Conservation, 50 Wolf Road Albany, New York 12233, attention: Division of Air Resources.

(II) North Carolina Environmental Management Commission, Department of Natural and Economic Resources, Division of Environmental Management, P.O. Box 27687, Raleigh, NC 27611. Attention: Air Quality Section.

(JJ) State of North Dakota, State Department of Health and Consolidated Laboratories, Division of Environmental Engineering, State Capitol, Bismarck, ND 58505.

EDITORIAL NOTE: For a table listing Region VIII's NSPS delegation status, see paragraph (c) of this section.

(KK) State of Ohio:

(i) Medina, Summit and Portage Counties; Director, Akron Regional Air Quality Management District, 177 South Broadway, Akron, OH 44308.

(ii) Stark County: Air Pollution Control Division, 420 Market Avenue North, Canton, Ohio 44702–3335.

(iii) Butler, Clermont, Hamilton, and Warren Counties: Air Program Manager, Hamilton County Department of Environmental Services, 1632 Central Parkway, Cincinnati, Ohio 45210.

(iv) Cuyahoga County: Commissioner, Department of Public Health & Welfare, Division of Air Pollution Control, 1925 Saint Clair, Cleveland, Ohio 44114.

(v) Belmont, Carroll, Columbiana, Harrison, Jefferson, and Monroe Counties: Director, North Ohio Valley Air Authority

(NOVAA), 814 Adams Street, Steubenville, OH 43952.

(vi) Clark, Darke, Greene, Miami, Montgomery, and Preble Counties: Director, Regional Air Pollution Control Agency (RAPCA) 451 West Third Street, Dayton, Ohio 45402.

(vii) Lucas County and the City of Rossford (in Wood County): Director, Toledo Environmental Services Agency, 26 Main Street, Toledo, OH 43605.

(viii) Adams, Brown, Lawrence, and Scioto Counties; Engineer-Director, Air Division, Portsmouth City Health Department, 740 Second Street, Portsmouth, OH 45662.

(ix) Allen, Ashland, Auglaize, Crawford, Defiance, Erie, Fulton, Hancock, Hardin, Henry, Huron, Marion, Mercer, Ottawa, Paulding, Putnam, Richland, Sandusky, Seneca, Van Wert, Williams, Wood (except City of Rossford), and Wyandot Counties: Ohio Environmental Protection Agency, Northwest District Office, Air Pollution Control, 347 Dunbridge Rd., Bowling Green, Ohio 43402.

(x) Ashtabula, Holmes, Lorain, and Wayne Counties: Ohio Environmental Protection Agency, Northeast District Office, Air Pollution Unit, 2110 East Aurora Road, Twinsburg, OH 44087.

(xi) Athens, Coshocton, Gallia, Guernsey, Hocking, Jackson, Meigs, Morgan, Muskingum, Noble, Perry, Pike, Ross, Tuscarawas, Vinton, and Washington Counties: Ohio Environmental Protection Agency, Southeast District Office, Air Pollution Unit, 2195 Front Street, Logan, OH 43138.

(xii) Champaign, Clinton, Highland, Logan, and Shelby Counties: Ohio Environmental Protection Agency, Southwest District Office, Air Pollution Unit, 401 East Fifth Street, Dayton, Ohio 45402–2911.

(xiii) Delaware, Fairfield, Fayette, Franklin, Knox, Licking, Madison, Morrow, Pickaway, and Union Counties: Ohio Environmental Protection Agency, Central District Office, Air Pollution Control, 3232 Alum Creek Drive, Columbus, Ohio, 43207–3417.

(xiv) Geauga and Lake Counties: Lake County General Health District, Air Pollution Control, 105 Main Street, Painesville, OH 44077.

(xv) Mahoning and Trumbull Counties: Mahoning-Trumbull Air Pollution Control Agency, 9 West Front Street, Youngstown, OH 44503.

(LL) State of Oklahoma, Oklahoma State Department of Health, Air Quality Service, P.O. Box 53551, Oklahoma City, OK 73152.

(i) Oklahoma City and County: Director, Oklahoma City-County Health Department, 921 Northeast 23rd Street, Oklahoma City, OK 73105.

(ii) Tulsa County: Tulsa City-County Health Department, 4616 East Fifteenth Street, Tulsa, OK 74112.

(MM) State of Oregon, Department of Environmental Quality, Yeon Building, 522 S.W. Fifth, Portland, OR 97204.

(i)—(viii) [Reserved]

(ix) Lane Regional Air Pollution Authority, 225 North Fifth, Suite 501, Springfield, OR 97477.

(NN) (a) City of Philadelphia: Philadelphia Department of Public Health, Air Management Services, 500 S. Broad Street, Philadelphia, PA 19146.

(b) Commonwealth of Pennsylvania: Department of Environmental Resources, Post Office Box 2063, Harrisburg, PA 17120.

(c) Allegheny County: Allegheny County Health Department, Bureau of Air Pollution Control, 301 Thirty-ninth Street, Pittsburgh, PA 15201.

(OO) State of Rhode Island, Division of Air and Hazardous Materials, Department of Environmental Management, 291 Promenade Street, Providence, RI 02908.

(PP) State of South Carolina, Office of Environmental Quality Control, Department of Health and Environmental Control, 2600 Bull Street, Columbia, SC 29201.

(QQ) State of South Dakota, Department of Water and Natural Resources, Office of Air Quality and Solid Waste, Joe Foss Building, 523 East Capitol, Pierre, SD 57501–3181.

EDITORIAL NOTE: For a table listing Region VIII's NSPS delegation status, see paragragh (c) of this section.

(RR) Division of Air Pollution Control, Tennessee Department of Public Health, 256 Capitol Hill Building, Nashville, TN 37219.

Knox County Department of Air Pollution, City/County Building, Room L222, 400 Main Avenue, Knoxville, TN 37902.

Air Pollution Control Bureau, Metropolitan Health Department, 311 23rd Avenue North, Nashville, TN 37203.

(SS) State of Texas, Texas Air Control Board, 6330 Highway 290 East, Austin, TX 78723.

(TT) State of Utah, Department of Health, Bureau of Air Quality, 288 North 1460 West, P.O. Box 16690, Salt Lake City, UT 84113—0690.

EDITORIAL NOTE: For a table listing Region VIII's NSPS delegation status, see paragraph (c) of this section.

(UU) State of Vermont, Air Pollution Control Division, Agency of Natural Resources, Building 3 South, 103 South Main Street, Waterbury, VT 05676.

(VV) Commonwealth of Virginia, Virginia State Air Pollution Control Board, Room 1106, Ninth Street Office Building, Richmond, VA 23219.

(WW)(i) Washington: Washington Department of Ecology, Post Office Box 47600, Olympia, WA 98504.

(ii) Benton-Franklin Counties Clean Air Authority (BFCCAA), 650 George Washington Way, Richland, WA 99352.

(iii) Northwest Air Pollution Authority (NWAPA), 302 Pine Street, #207, Mt. Vernon, WA 98273–3852.

(iv) Olympic Air Pollution Control Authority (OAPCA), 909 Sleater-Kinney Rd. SE - Suite 1, Lacey, WA 98503.

(v) Puget Sound Air Pollution Control Authority (PSAPCA), 110 Union Street, Suite 500, Seattle, WA 98101.

(vi) Southwest Air Pollution Control Authority (SWAPCA), 1308 N.E. 134th Street, Suite D, Vancouver, WA 98685–2747.

(vii) Spokane County Air Pollution Control Authority (SCAPCA), West 1101 College Avenue, Health Building, Room 403, Spokane, WA 99201.

(viii) [Reserved]

(ix) The following is a table indicating the delegation status of the New Source Performance Standards for the State of Washington.

DELEGATION OF AUTHORITY—NEW SOURCE PERFORMANCE STANDARDS STATE OF WASHINGTON

Subpart	Description	WDOE [1]	BFCCAA [2]	NWAPCA [3]	OAPCA [4]	PSAPCA [5]	SWAPCA [6]	SCAPCA [7]
A	General Provisions	01/01/93	01/01/93	01/01/93	01/01/93	01/01/93	01/01/93	01/01/93
D	Fossil-Fuel-Fired Steam Generators	01/01/93	01/01/93	01/01/93	01/01/93	01/01/93	01/01/93	01/01/93
Da	Electric Utility Steam Generating Units	01/01/93	01/01/93	01/01/93	01/01/93	01/01/93	01/01/93	01/01/93
Db	Industrial-Commercial-Institutional Steam Generating Units	01/01/93	01/01/93	01/01/93	01/01/93	01/01/93	01/01/93	01/01/93
Dc	Small Industrial-Commercial-Institutional Steam Generating Units	01/01/93	01/01/93	01/01/93	01/01/93	01/01/93	01/01/93	01/01/93
E	Incinerators	01/01/93	01/01/93	01/01/93	01/01/93	01/01/93	01/01/93	01/01/93
Ea	Municipal Waste Combustion	01/01/93	01/01/93	01/01/93	01/01/93	01/01/93	01/01/93	01/01/93
F	Portland Cement Plants	01/01/93	01/01/93	01/01/93	01/01/93	01/01/93	01/01/93	01/01/93
G	Nitric Acid Plants	01/01/93	01/01/93	01/01/93	01/01/93	01/01/93	01/01/93	01/01/93
H	Sulfuric Acid Plants	01/01/93	01/01/93	01/01/93	01/01/93	01/01/93	01/01/93	01/01/93
I	Asphalt Concrete Plants	01/01/93	01/01/93	01/01/93	01/01/93	01/01/93	01/01/93	01/01/93
J	Petroleum Refineries	01/01/93	01/01/93	01/01/93	01/01/93	01/01/93	01/01/93	01/01/93
K	Petroleum Liquid Storage Vessels 6/11/73–5/19/78	01/01/93	01/01/93	01/01/93	01/01/93	01/01/93	01/01/93	01/01/93
Ka	Petroleum Liquid Storage Vessels After 5/18/78–7/23/84	01/01/93	01/01/93	01/01/93	01/01/93	01/01/93	01/01/93	01/01/93
Kb	Volatile Organic Liquid Storage Vessels After 7/23/84	01/01/93	01/01/93	01/01/93	01/01/93	01/01/93	01/01/93	01/01/93
L	Secondary Lead Smelters	01/01/93	01/01/93	01/01/93	01/01/93	01/01/93	01/01/93	01/01/93
M	Brass & Bronze Ingot Production Plants	01/01/93	01/01/93	01/01/93	01/01/93	01/01/93	01/01/93	01/01/93
N	Iron & Steel Plants: BOPF Particulate	01/01/93	01/01/93	01/01/93	01/01/93	01/01/93	01/01/93	01/01/93
Na	Iron & Steel Plants: BOPF, Hot Metal & Skimming Stations	01/01/93	01/01/93	01/01/93	01/01/93	01/01/93	01/01/93	01/01/93
O	Sewage Treatment Plants	01/01/93	01/01/93	01/01/93	01/01/93	01/01/93	01/01/93	01/01/93
P	Primary Copper Smelters	01/01/93	01/01/93	01/01/93	01/01/93	01/01/93	01/01/93	01/01/93
Q	Primary Zinc Smelters	01/01/93	01/01/93	01/01/93	01/01/93	01/01/93	01/01/93	01/01/93
R	Primary Lead Smelters	01/01/93	01/01/93	01/01/93	01/01/93	01/01/93	01/01/93	01/01/93
S	Primary Aluminum Reduction Plants	01/01/93	01/01/93	01/01/93	01/01/93	01/01/93	01/01/93	01/01/93
T	Wet Process Phosphoric Acid Plants	01/01/93	01/01/93	01/01/93	01/01/93	01/01/93	01/01/93	01/01/93
U	Superphosphoric Acid Plants	01/01/93	01/01/93	01/01/93	01/01/93	01/01/93	01/01/93	01/01/93
V	Diammonium Phosphate Plants	01/01/93	01/01/93	01/01/93	01/01/93	01/01/93	01/01/93	01/01/93
W	Triple Superphosphate Plants	01/01/93	01/01/93	01/01/93	01/01/93	01/01/93	01/01/93	01/01/93
X	Granular Triple Superphosphate Storage Facilities	01/01/93	01/01/93	01/01/93	01/01/93	01/01/93	01/01/93	01/01/93
Y	Coal Preparation Plants	01/01/93	01/01/93	01/01/93	01/01/93	01/01/93	01/01/93	01/01/93
Z	Ferroalloy Production Facilities	01/01/93	01/01/93	01/01/93	01/01/93	01/01/93	01/01/93	01/01/93
AA	Steel Plant Electric Arc Furnaces 10/21/74–8/17/83	01/01/93	01/01/93	01/01/93	01/01/93	01/01/93	01/01/93	01/01/93
AAa	Steel Plant Electric Arc Furnaces & Argon-Oxygen Decarburization Vessels after 8/7/83.	01/01/93	01/01/93	01/01/93	01/01/93	01/01/93	01/01/93	01/01/93
BB	Kraft Pulp Mills	01/01/93	01/01/93	01/01/93	01/01/93	01/01/93	01/01/93	01/01/93
CC	Glass Manufacturing Plants	01/01/93	01/01/93	01/01/93	01/01/93	01/01/93	01/01/93	01/01/93
DD	Grain Elevators	01/01/93	01/01/93	01/01/93	01/01/93	01/01/93	01/01/93	01/01/93
EE	Surface Coating of Metal Furniture	01/01/93	01/01/93	01/01/93	01/01/93	01/01/93	01/01/93	01/01/93
GG	Stationary Gas Turbines	01/01/93	01/01/93	01/01/93	01/01/93	01/01/93	01/01/93	01/01/93
HH	Lime Manufacturing Plants	01/01/93	01/01/93	01/01/93	01/01/93	01/01/93	01/01/93	01/01/93
KK	Lead-Acid Battery Manufacturing Plant	01/01/93	01/01/93	01/01/93	01/01/93	01/01/93	01/01/93	01/01/93
LL	Metallic Mineral Processing Plants	01/01/93	01/01/93	01/01/93	01/01/93	01/01/93	01/01/93	01/01/93
MM	Automobile & Light Duty Truck Surface Coating Operations	01/01/93	01/01/93	01/01/93	01/01/93	01/01/93	01/01/93	01/01/93
NN	Phosphate Rock Plants	01/01/93	01/01/93	01/01/93	01/01/93	01/01/93	01/01/93	01/01/93
PP	Ammonium Sulfate Manufacture	01/01/93	01/01/93	01/01/93	01/01/93	01/01/93	01/01/93	01/01/93
QQ	Graphic Arts Industry: Publication Rotogravure Printing	01/01/93	01/01/93	01/01/93	01/01/93	01/01/93	01/01/93	01/01/93

DELEGATION OF AUTHORITY—NEW SOURCE PERFORMANCE STANDARDS STATE OF WASHINGTON—Continued

Subpart	Description	WDOE [1]	BFCCAA [2]	NWAPCA [3]	OAPCA [4]	PSAPCA [5]	SWAPCA [6]	SCAPCA [7]
RR	Pressure Sensitive Tape & Label Surface Coating Operations	01/01/93	01/01/93	01/01/93	01/01/93	01/01/93	01/01/93	01/01/93
SS	Industrial Surface Coating: Large Appliances	01/01/93	01/01/93	01/01/93	01/01/93	01/01/93	01/01/93	01/01/93
TT	Metal Coil Surface Coating	01/01/93	01/01/93	01/01/93	01/01/93	01/01/93	01/01/93	01/01/93
UU	Asphalt Processing & Asphalt Roofing Manufacturer	01/01/93	01/01/93	01/01/93	01/01/93	01/01/93	01/01/93	01/01/93
VV	SOCMI Equipment Leaks (VOC)	01/01/93	01/01/93	01/01/93	01/01/93	01/01/93	01/01/93	01/01/93
WW	Beverage Can Surface Coating Operations	01/01/93	01/01/93	01/01/93	01/01/93	01/01/93	01/01/93	01/01/93
XX	Bulk Gasoline Terminals	01/01/93	01/01/93	01/01/93	01/01/93	01/01/93	01/01/93	01/01/93
AAA	Residential Wood Heaters	01/01/93	01/01/93	01/01/93	01/01/93	01/01/93	01/01/93	01/01/93
BBB	Rubber Tire Manufacturing	01/01/93	01/01/93	01/01/93	01/01/93	01/01/93	01/01/93	01/01/93
DDD	Polymer Manufacturing Industry (VOC)	01/01/93	01/01/93	01/01/93	01/01/93	01/01/93	01/01/93	01/01/93
FFF	Flexible Vinyl and Urethane Coating and Printing	01/01/93	01/01/93	01/01/93	01/01/93	01/01/93	01/01/93	01/01/93
GGG	Equipment Leaks of VOC in Petroleum Refineries	01/01/93	01/01/93	01/01/93	01/01/93	01/01/93	01/01/93	01/01/93
HHH	Synthetic Fiber Production Facilities	01/01/93	01/01/93	01/01/93	01/01/93	01/01/93	01/01/93	01/01/93
III	VOC Emissions from SOCMI Air Oxidation Unit Processes	01/01/93	01/01/93	01/01/93	01/01/93	01/01/93	01/01/93	01/01/93
JJJ	Petroleum Dry Cleaners	01/01/93	01/01/93	01/01/93	01/01/93	01/01/93	01/01/93	01/01/93
KKK	VOC Emissions from Onshore Natural Gas Production	01/01/93	01/01/93	01/01/93	01/01/93	01/01/93	01/01/93	01/01/93
LLL	Onshore Natural Gas Production (SO2)	01/01/93	01/01/93	01/01/93	01/01/93	01/01/93	01/01/93	01/01/93
NNN	VOC Emissions from SOCMI Distillation Facilities	01/01/93	01/01/93	01/01/93	01/01/93	01/01/93	01/01/93	01/01/93
OOO	Nonmetallic Mineral Processing Plants	01/01/93	01/01/93	01/01/93	01/01/93	01/01/93	01/01/93	01/01/93
PPP	Wool Fiberglass Insulation Manufacturing Plants	01/01/93	01/01/93	01/01/93	01/01/93	01/01/93	01/01/93	01/01/93
QQQ	VOC Emissions from Petroleum Refinery Wastewater Systems	01/01/93	01/01/93	01/01/93	01/01/93	01/01/93	01/01/93	01/01/93
SSS	Magnetic Tape Coating Facilities	01/01/93	01/01/93	01/01/93	01/01/93	01/01/93	01/01/93	01/01/93
TTT	Surface Coating of Plastic Parts for Business Machines	01/01/93	01/01/93	01/01/93	01/01/93	01/01/93	01/01/93	01/01/93
UUU	Calciners & Dryers In Mineral Industries	01/01/93	01/01/93	01/01/93	01/01/93	01/01/93	01/01/93	01/01/93
VVV	Polymeric Coating of Support Substrates Facilities	01/01/93	01/01/93	01/01/93	01/01/93	01/01/93	01/01/93	01/01/93

[1] WDOE—State of Washington Department of Ecology.
[2] BFCCAA—Benton Franklin Counties Clean Air Authority.
[3] NWAPCA—Northwest Air Pollution Control Authority.
[4] OAPCA—Olympic Air Pollution Control Authority.
[5] PSAPCA—Puget Sound Air Pollution Control Agency.
[6] SWAPCA—Southwest Air Pollution Control Authority.
[7] SCAPCA—Spokane County Air Pollution Control Authority.

(XX) State of West Virginia: Air Pollution Control Commission, 1558 Washington Street East, Charleston, WV 25311.

(YY) Wisconsin—Wisconsin Department of Natural Resources, P.O. Box 7921, Madison, WI 53707.

(ZZ) State of Wyoming, Department of Environmental Quality, Air Quality Division, Herschler Building, 122 West 25th Street, Cheyenne, WY 82002.

EDITORIAL NOTE: For a table listing Region VIII's NSPS delegation status, see paragraph (c) of this section.

(AAA) Territory of Guam: Guam Environmental Protection Agency, Post Office Box 2999, Agana, Guam 96910.

(1) The following table lists the specific source and pollutant categories that have been delegated to the air pollution control agency in Guam. A star (*) is used to indicate each category that has been delegated.

DELEGATION STATUS OF NEW SOURCE PERFORMANCE STANDARDS (NSPS) FOR GUAM

AIR POLLUTION CONTROL AGENCY	A	D	Da	E	F	G	H	I	J	K	Ka	L	M	N	O	P	Q	R	S	T	U	V	W	X	Y	Z
General Provisions	*																									
Fossil Fuel Fired Steam Generating Units Constructed After 8/17/71	*	*																								
Electric Utility Steam Generating Units Constructed After 9/18/78																										
Incinerators																										
Portland Cement Plants	*				*																					
Nitric Acid Plants																										
Sulfuric Acid Plants																										
Asphalt Concrete Plants	*																									
Petroleum Refineries	*																									
Storage Vessels for Petroleum Liquids Constructed After 6/11/73 Prior to 5/19/78	*																									
Storage Vessels for Petroleum Liquids Constructed After 5/18/78																										
Secondary Lead Smelters																										
Secondary Brass and Bronze Ingot Production																										
Iron and Steel Plants																										
Sewage Treatment Plants																										
Primary Copper Smelters																										
Primary Zinc Smelters																										
Primary Lead Smelters																										
Primary Aluminum Reduction Plants																										
Phosphate Fertilizer Industry: Wet Process Phosphoric Acid Plants																										
Phosphate Fertilizer Industry: Super Phosphoric Acid Plants																										
Phosphate Fertilizer Industry: Diammonium Phosphate Plant																										
Phosphate Fertilizer Industry: Triple Super Phosphate Plant																										
Phosphate Fertilizer Industry: Granular Triple Super Phosphate Storage Facilities																										
Coal Preparation Plants																										
Ferroalloy Production Facilities																										

POLLUTANT CATEGORY

GUAM

* Indicates delegation

DELEGATION STATUS OF NEW SOURCE PERFORMANCE STANDARDS (NSPS) FOR GUAM											NATIONAL EMISSION STANDARDS FOR HAZARDOUS AIR POLLUTANTS (NESHAPS)					
AIR POLLUTION CONTROL AGENCY	Steel Plants: Electric Arc Furnaces	Kraft Pulp Mills	Glass Manufacturing Plants	Grain Elevators	Stationary Gas Turbines	Lime Manufacturing Plants	Lead - Acid Battery Manufacturing Plants	Automobile & Light Duty Surface Coating Operations	Phosphate Rock Plants	Ammonium Sulfate Manufacturing	General Provisions	Asbestos	Beryllium	Beryllium Rocket Motor Firing	Mercury	Vinyl Chloride
POLLUTANT CATEGORY	AA	BB	CC	DD	GG	HH	KK	MM	NN	PP	A	B	C	D	E	F
No Delegation In These Categories																

(BBB) Commonwealth of Puerto Rico: Commonwealth of Puerto Rico Environmental Quality Board, P.O. Box 11488, Santurce, PR 00910, Attention: Air Quality Area Director (see table under §60.4(b)(FF)(1)).

(CCC) U.S. Virgin Islands: U.S. Virgin Islands Department of Conservation and Cultural Affairs, P.O. Box 578, Charlotte Amalie, St. Thomas, VI 00801.

(c) The following is a table indicating the delegation status of New Source Performance Standards for Region VIII.

DELEGATION STATUS OF NEW SOURCE PERFORMANCE STANDARDS

[(NSPS) for Region VIII]

Subpart	CO	MT[1]	ND	SD[1]	UT[1]	WY
A—General Provisions	(*)	(*)	(*)	(*)	(*)	(*)
D—Fossil Fuel Fired Steam Generators	(*)	(*)	(*)	(*)	(*)	(*)
Da—Electric Utility Steam Generators	(*)	(*)	(*)	(*)	(*)	(*)
Db—Industrial-Commercial—Institutional Steam Generators	(*)	(*)	(*)	(*)	(*)	(*)
Dc—Industrial-Commercial—Institutional Steam Generators	(*)	(*)	(*)	(*)	(*)	
E—Incinerators	(*)	(*)	(*)	(*)	(*)	(*)
Ea—Municipal Waste Combustors	(*)	(*)	(*)	(*)	(*)	(*)
F—Portland Cement Plants	(*)	(*)	(*)	(*)	(*)	(*)
G—Nitric Acid Plants	(*)	(*)	(*)		(*)	(*)
H—Sulfuric Acid Plants	(*)	(*)	(*)		(*)	(*)
I—Asphalt Concrete Plants	(*)	(*)	(*)	(*)	(*)	(*)
J—Petroleum Refineries	(*)	(*)	(*)		(*)	(*)
K—Petroleum Storage Vessels (after 6/11/73 & prior to 5/19/78)	(*)	(*)	(*)	(*)	(*)	(*)
Ka—Petroleum Storage Vessels (after 5/18/78 & prior to 7/23/84)	(*)	(*)	(*)	(*)	(*)	(*)
Kb—Petroleum Storage Vessels (after 7/23/84)	(*)	(*)	(*)	(*)	(*)	(*)
L—Secondary Lead Smelters	(*)	(*)	(*)		(*)	(*)
M—Secondary Brass & Bronze Production Plants	(*)	(*)	(*)		(*)	(*)
N—Primary Emissions from Basic Oxygen Process Furnaces (after 6/11/73)	(*)	(*)	(*)		(*)	(*)
Na—Secondary Emissions from Basic Oxygen Process Furnaces (after 1/20/83)	(*)	(*)	(*)		(*)	(*)
O—Sewage Treatment Plants	(*)	(*)	(*)	(*)	(*)	(*)
P—Primary Copper Smelters	(*)	(*)	(*)		(*)	(*)

DELEGATION STATUS OF NEW SOURCE PERFORMANCE STANDARDS—Continued
[(NSPS) for Region VIII]

Subpart	CO	MT[1]	ND	SD[1]	UT[1]	WY
Q—Primary Zinc Smelters	(*)	(*)	(*)		(*)	(*)
R—Primary Lead Smelters	(*)	(*)	(*)		(*)	(*)
S—Primary Aluminum Reduction Plants	(*)	(*)	(*)		(*)	(*)
T—Phosphate Fertilizer Industry: Wet Process Phosphoric Plants	(*)	(*)	(*)		(*)	(*)
U—Phosphate Fertilizer Industry: Superphosphoric Acid Plants	(*)	(*)	(*)		(*)	(*)
V—Phosphate Fertilizer Industry: Diammonium Phosphate Plants	(*)	(*)	(*)		(*)	(*)
W—Phosphate Fertilizer Industry: Triple Superphosphate Plants	(*)	(*)	(*)		(*)	(*)
X—Phosphate Fertilizer Industry: Granular Triple Superphosphate Storage Facilities	(*)	(*)	(*)		(*)	(*)
Y—Coal Preparation Plants	(*)	(*)	(*)	(*)	(*)	(*)
Z—Ferroalloy Production Facilities	(*)	(*)	(*)		(*)	(*)
AA—Steel Plants: Electric Arc Furnaces (10/21/74–8/17/83)	(*)	(*)	(*)		(*)	(*)
AAa—Steel Plants: Electric Arc Furnaces and Argon-Oxygen Decarburization Vessels (after 8/7/83)	(*)	(*)	(*)		(*)	(*)
BB—Kraft Pulp Mills	(*)	(*)	(*)		(*)	(*)
CC—Glass Manufacturing Plants	(*)	(*)	(*)		(*)	(*)
DD—Grain Elevator	(*)	(*)	(*)	(*)	(*)	(*)
EE—Surface Coating of Metal Furniture	(*)	(*)	(*)		(*)	(*)
GG—Stationary Gas Turbines	(*)	(*)	(*)	(*)	(*)	(*)
HH—Lime Manufacturing Plants	(*)	(*)	(*)	(*)	(*)	(*)
KK—Lead-Acid Battery Manufacturing Plants	(*)	(*)	(*)		(*)	(*)
LL—Metallic Mineral Processing Plants	(*)	(*)	(*)	(*)	(*)	(*)
MM—Automobile & Light Duty Truck Surface Coating Operations	(*)	(*)	(*)		(*)	(*)
NN—Phosphate Rock Plants	(*)	(*)	(*)		(*)	(*)
PP—Ammonium Sulfate Manufacturing	(*)	(*)	(*)		(*)	(*)
QQ—Graphic Arts Industry: Publication Rotogravure Printing	(*)	(*)	(*)	(*)	(*)	(*)
RR—Pressure Sensitive Tape & Label Surface Coating	(*)	(*)	(*)	(*)	(*)	(*)
SS—Industrial Surface Coating: Large Applications	(*)	(*)	(*)		(*)	(*)
TT—Metal Coil Surface Coating	(*)	(*)	(*)		(*)	(*)
UU—Asphalt Processing & Asphalt Roofing Manufacture	(*)	(*)	(*)		(*)	(*)
VV—Synthetic Organic Chemicals Manufacturing: Equipment Leaks of VOC	(*)	(*)	(*)	(*)	(*)	(*)
WW—Beverage Can Surface Coating Industry	(*)	(*)	(*)		(*)	(*)
XX—Bulk Gasoline Terminals	(*)	(*)	(*)	(*)	(*)	(*)
AAA—Residential Wood Heaters	(*)	(*)	(*)	(*)	(*)	(*)
BBB—Rubber Tires	(*)	(*)	(*)		(*)	(*)
DDD—VOC Emissions from Polymer Manufacturing Industry	(*)	(*)	(*)		(*)	(*)
FFF—Flexible Vinyl & Urethane Coating & Printing	(*)	(*)	(*)		(*)	(*)
GGG—Equipment Leaks of VOC in Petroleum Refineries	(*)	(*)	(*)		(*)	(*)
HHH—Synthetic Fiber Production	(*)	(*)	(*)		(*)	(*)
III—VOC Emissions from the Synthetic Organic Chemical Manufacturing Industry Air Oxidation Unit Processes		(*)	(*)		(*)	(*)
JJJ—Petroleum Dry Cleaners	(*)	(*)	(*)	(*)	(*)	(*)
KKK—Equipment Leaks of VOC from Onshore Natural Gas Processing Plants	(*)	(*)	(*)		(*)	(*)
LLL—Onshore Natural Gas Processing: SO_2 Emissions	(*)	(*)	(*)		(*)	(*)
NNN—VOC Emissions from the Synthetic Organic Chemical Manufacturing Industry Distillation Operations	(*)	(*)	(*)	(*)	(*)	(*)
OOO—Nonmetallic Mineral Processing Plants	(*)	(*)	(*)	(*)	(*)	(*)
PPP—Wool Fiberglass Insulation Manufacturing Plants	(*)	(*)	(*)		(*)	(*)
QQQ—VOC Emissions from Petroleum Refinery Wastewater Systems	(*)	(*)	(*)		(*)	(*)
RRR—VOC Emissions from Synthetic Organic Chemical Manufacturing Industry (SOCMI) Reactor Processes	(*)		(*)		(*)	
SSS—Magnetic Tape Industry	(*)	(*)	(*)	(*)	(*)	(*)

DELEGATION STATUS OF NEW SOURCE PERFORMANCE STANDARDS—Continued
[(NSPS) for Region VIII]

Subpart	CO	MT[1]	ND	SD[1]	UT[1]	WY
TTT—Plastic Parts for Business Machine Coatings	(*)	(*)	(*)		(*)	(*)
UUU—Calciners and Dryers in Mineral Industries	(*)		(*)		(*)	
VVV—Polymeric Coating of Supporting Substrates	(*)	(*)	(*)		(*)	(*)
WWW—Municipal Solid Waste Landfills			(*)		(*)	

(*) Indicates approval of state regulation.
[1] Indicates approval of New Source Performance Standards as part of the State Implementation Plan (SIP).

[40 FR 18169, Apr. 25, 1975]

EDITORIAL NOTE: For FEDERAL REGISTER citations affecting § 60.4 see the List of CFR Sections Affected appearing in the Finding Aids section of this volume.

§ 60.5 Determination of construction or modification.

(a) When requested to do so by an owner or operator, the Administrator will make a determination of whether action taken or intended to be taken by such owner or operator constitutes construction (including reconstruction) or modification or the commencement thereof within the meaning of this part.

(b) The Administrator will respond to any request for a determination under paragraph (a) of this section within 30 days of receipt of such request.

[40 FR 58418, Dec. 16, 1975]

§ 60.6 Review of plans.

(a) When requested to do so by an owner or operator, the Administrator will review plans for construction or modification for the purpose of providing technical advice to the owner or operator.

(b)(1) A separate request shall be submitted for each construction or modification project.

(2) Each request shall identify the location of such project, and be accompanied by technical information describing the proposed nature, size, design, and method of operation of each affected facility involved in such project, including information on any equipment to be used for measurement or control of emissions.

(c) Neither a request for plans review nor advice furnished by the Administrator in response to such request shall (1) relieve an owner or operator of legal responsibility for compliance with any provision of this part or of any applicable State or local requirement, or (2) prevent the Administrator from implementing or enforcing any provision of this part or taking any other action authorized by the Act.

[36 FR 24877, Dec. 23, 1971, as amended at 39 FR 9314, Mar. 8, 1974]

§ 60.7 Notification and record keeping.

(a) Any owner or operator subject to the provisions of this part shall furnish the Administrator written notification or, if acceptable to both the Administrator and the owner or operator of a source, electronic notification, as follows:

(1) A notification of the date construction (or reconstruction as defined under § 60.15) of an affected facility is commenced postmarked no later than 30 days after such date. This requirement shall not apply in the case of mass-produced facilities which are purchased in completed form.

(2) [Reserved]

(3) A notification of the actual date of initial startup of an affected facility postmarked within 15 days after such date.

(4) A notification of any physical or operational change to an existing facility which may increase the emission rate of any air pollutant to which a standard applies, unless that change is specifically exempted under an applicable subpart or in § 60.14(e). This notice shall be postmarked 60 days or as soon as practicable before the change is commenced and shall include information describing the precise nature of the change, present and proposed emission control systems, productive capacity of the facility before and after the change, and the expected completion

date of the change. The Administrator may request additional relevant information subsequent to this notice.

(5) A notification of the date upon which demonstration of the continuous monitoring system performance commences in accordance with §60.13(c). Notification shall be postmarked not less than 30 days prior to such date.

(6) A notification of the anticipated date for conducting the opacity observations required by §60.11(e)(1) of this part. The notification shall also include, if appropriate, a request for the Administrator to provide a visible emissions reader during a performance test. The notification shall be postmarked not less than 30 days prior to such date.

(7) A notification that continuous opacity monitoring system data results will be used to determine compliance with the applicable opacity standard during a performance test required by §60.8 in lieu of Method 9 observation data as allowed by §60.11(e)(5) of this part. This notification shall be postmarked not less than 30 days prior to the date of the performance test.

(b) Any owner or operator subject to the provisions of this part shall maintain records of the occurrence and duration of any startup, shutdown, or malfunction in the operation of an affected facility; any malfunction of the air pollution control equipment; or any periods during which a continuous monitoring system or monitoring device is inoperative.

(c) Each owner or operator required to install a continuous monitoring device shall submit excess emissions and monitoring systems performance report (excess emissions are defined in applicable subparts) and-or summary report form (see paragraph (d) of this section) to the Administrator semiannually, except when: more frequent reporting is specifically required by an applicable subpart; or the Administrator, on a case-by-case basis, determines that more frequent reporting is necessary to accurately assess the compliance status of the source. All reports shall be postmarked by the 30th day following the end of each six-month period. Written reports of excess emissions shall include the following information:

(1) The magnitude of excess emissions computed in accordance with §60.13(h), any conversion factor(s) used, and the date and time of commencement and completion of each time period of excess emissions. The process operating time during the reporting period.

(2) Specific identification of each period of excess emissions that occurs during startups, shutdowns, and malfunctions of the affected facility. The nature and cause of any malfunction (if known), the corrective action taken or preventative measures adopted.

(3) The date and time identifying each period during which the continuous monitoring system was inoperative except for zero and span checks and the nature of the system repairs or adjustments.

(4) When no excess emissions have occurred or the continuous monitoring system(s) have not been inoperative, repaired, or adjusted, such information shall be stated in the report.

(d) The summary report form shall contain the information and be in the format shown in figure 1 unless otherwise specified by the Administrator. One summary report form shall be submitted for each pollutant monitored at each affected facility.

(1) If the total duration of excess emissions for the reporting period is less than 1 percent of the total operating time for the reporting period and CMS downtime for the reporting period is less than 5 percent of the total operating time for the reporting period, only the summary report form shall be submitted and the excess emission report described in §60.7(c) need not be submitted unless requested by the Administrator.

(2) If the total duration of excess emissions for the reporting period is 1 percent or greater of the total operating time for the reporting period or the total CMS downtime for the reporting period is 5 percent or greater of the total operating time for the reporting period, the summary report form and the excess emission report described in §60.7(c) shall both be submitted.

FIGURE 1—SUMMARY REPORT—GASEOUS AND OPACITY EXCESS EMISSION AND MONITORING SYSTEM PERFORMANCE

Pollutant (Circle One—SO_2/NO_X/TRS/H_2S/CO/Opacity)
Reporting period dates: From to
Company:
Emission Limitation
Address:
Monitor Manufacturer and Model No.
Date of Latest CMS Certification or Audit
Process Unit(s) Description:
Total source operating time in reporting period [1]

Emission data summary [1]		CMS performance summary [1]	
1. Duration of excess emissions in reporting period due to:		1. CMS downtime in reporting period due to:	
a. Startup/shutdown		a. Monitor equipment malfunctions	
b. Control equipment problems		b. Non-Monitor equipment malfunctions	
c. Process problems		c. Quality assurance calibration	
d. Other known causes		d. Other known causes	
e. Unknown causes		e. Unknown causes	
2. Total duration of excess emission		2. Total CMS Downtime	
3. Total duration of excess emissions × (100) [Total source operating time].	%[2]	3. [Total CMS Downtime] × (100) [Total source operating time].	%[2]

[1] For opacity, record all times in minutes. For gases, record all times in hours.
[2] For the reporting period: If the total duration of excess emissions is 1 percent or greater of the total operating time or the total CMS downtime is 5 percent or greater of the total operating time, both the summary report form and the excess emission report described in § 60.7(c) shall be submitted.

On a separate page, describe any changes since last quarter in CMS, process or controls. I certify that the information contained in this report is true, accurate, and complete.

Name

Signature

Title

Date

(e)(1) Notwithstanding the frequency of reporting requirements specified in paragraph (c) of this section, an owner or operator who is required by an applicable subpart to submit excess emissions and monitoring systems performance reports (and summary reports) on a quarterly (or more frequent) basis may reduce the frequency of reporting for that standard to semiannual if the following conditions are met:

(i) For 1 full year (e.g., 4 quarterly or 12 monthly reporting periods) the affected facility's excess emissions and monitoring systems reports submitted to comply with a standard under this part continually demonstrate that the facility is in compliance with the applicable standard;

(ii) The owner or operator continues to comply with all recordkeeping and monitoring requirements specified in this subpart and the applicable standard; and

(iii) The Administrator does not object to a reduced frequency of reporting for the affected facility, as provided in paragraph (e)(2) of this section.

(2) The frequency of reporting of excess emissions and monitoring systems performance (and summary) reports may be reduced only after the owner or operator notifies the Administrator in writing of his or her intention to make such a change and the Administrator does not object to the intended change. In deciding whether to approve a reduced frequency of reporting, the Administrator may review information concerning the source's entire previous performance history during the required recordkeeping period prior to the intended change, including performance test results, monitoring data, and evaluations of an owner or operator's conformance with operation and maintenance requirements. Such information may be used by the Administrator to make a judgment about the source's potential for noncompliance in the future. If the Administrator disapproves the owner or operator's request to reduce the frequency of reporting, the Administrator will notify the owner or operator in writing within 45 days after receiving notice of the owner or operator's intention. The notification from the Administrator to the owner or operator will specify the grounds on which the disapproval is

based. In the absence of a notice of disapproval within 45 days, approval is automatically granted.

(3) As soon as monitoring data indicate that the affected facility is not in compliance with any emission limitation or operating parameter specified in the applicable standard, the frequency of reporting shall revert to the frequency specified in the applicable standard, and the owner or operator shall submit an excess emissions and monitoring systems performance report (and summary report, if required) at the next appropriate reporting period following the noncomplying event. After demonstrating compliance with the applicable standard for another full year, the owner or operator may again request approval from the Administrator to reduce the frequency of reporting for that standard as provided for in paragraphs (e)(1) and (e)(2) of this section.

(f) Any owner or operator subject to the provisions of this part shall maintain a file of all measurements, including continuous monitoring system, monitoring device, and performance testing measurements; all continuous monitoring system performance evaluations; all continuous monitoring system or monitoring device calibration checks; adjustments and maintenance performed on these systems or devices; and all other information required by this part recorded in a permanent form suitable for inspection. The file shall be retained for at least two years following the date of such measurements, maintenance, reports, and records, except as follows:

(1) This paragraph applies to owners or operators required to install a continuous emissions monitoring system (CEMS) where the CEMS installed is automated, and where the calculated data averages do not exclude periods of CEMS breakdown or malfunction. An automated CEMS records and reduces the measured data to the form of the pollutant emission standard through the use of a computerized data acquisition system. In lieu of maintaining a file of all CEMS subhourly measurements as required under paragraph (f) of this section, the owner or operator shall retain the most recent consecutive three averaging periods of subhourly measurements and a file that contains a hard copy of the data acquisition system algorithm used to reduce the measured data into the reportable form of the standard.

(2) This paragraph applies to owners or operators required to install a CEMS where the measured data is manually reduced to obtain the reportable form of the standard, and where the calculated data averages do not exclude periods of CEMS breakdown or malfunction. In lieu of maintaining a file of all CEMS subhourly measurements as required under paragraph (f) of this section, the owner or operator shall retain all subhourly measurements for the most recent reporting period. The subhourly measurements shall be retained for 120 days from the date of the most recent summary or excess emission report submitted to the Administrator.

(3) The Administrator or delegated authority, upon notification to the source, may require the owner or operator to maintain all measurements as required by paragraph (f) of this section, if the Administrator or the delegated authority determines these records are required to more accurately assess the compliance status of the affected source.

(g) If notification substantially similar to that in paragraph (a) of this section is required by any other State or local agency, sending the Administrator a copy of that notification will satisfy the requirements of paragraph (a) of this section.

(h) Individual subparts of this part may include specific provisions which clarify or make inapplicable the provisions set forth in this section.

[36 FR 24877, Dec. 28, 1971, as amended at 40 FR 46254, Oct. 6, 1975; 40 FR 58418, Dec. 16, 1975; 45 FR 5617, Jan. 23, 1980; 48 FR 48335, Oct. 18, 1983; 50 FR 53113, Dec. 27, 1985; 52 FR 9781, Mar. 26, 1987; 55 FR 51382, Dec. 13, 1990; 59 FR 12428, Mar. 16, 1994; 59 FR 47265, Sep. 15, 1994; 64 FR 7463, Feb. 12, 1999]

§ 60.8 Performance tests.

(a) Within 60 days after achieving the maximum production rate at which the affected facility will be operated, but not later than 180 days after initial startup of such facility and at such other times as may be required by the

Administrator under section 114 of the Act, the owner or operator of such facility shall conduct performance test(s) and furnish the Administrator a written report of the results of such performance test(s).

(b) Performance tests shall be conducted and data reduced in accordance with the test methods and procedures contained in each applicable subpart unless the Administrator (1) specifies or approves, in specific cases, the use of a reference method with minor changes in methodology, (2) approves the use of an equivalent method, (3) approves the use of an alternative method the results of which he has determined to be adequate for indicating whether a specific source is in compliance, (4) waives the requirement for performance tests because the owner or operator of a source has demonstrated by other means to the Administrator's satisfaction that the affected facility is in compliance with the standard, or (5) approves shorter sampling times and smaller sample volumes when necessitated by process variables or other factors. Nothing in this paragraph shall be construed to abrogate the Administrator's authority to require testing under section 114 of the Act.

(c) Performance tests shall be conducted under such conditions as the Administrator shall specify to the plant operator based on representative performance of the affected facility. The owner or operator shall make available to the Administrator such records as may be necessary to determine the conditions of the performance tests. Operations during periods of startup, shutdown, and malfunction shall not constitute representative conditions for the purpose of a performance test nor shall emissions in excess of the level of the applicable emission limit during periods of startup, shutdown, and malfunction be considered a violation of the applicable emission limit unless otherwise specified in the applicable standard.

(d) The owner or operator of an affected facility shall provide the Administrator at least 30 days prior notice of any performance test, except as specified under other subparts, to afford the Administrator the opportunity to have an observer present. If after 30 days notice for an initially scheduled performance test, there is a delay (due to operational problems, etc.) in conducting the scheduled performance test, the owner or operator of an affected facility shall notify the Administrator (or delegated State or local agency) as soon as possible of any delay in the original test date, either by providing at least 7 days prior notice of the rescheduled date of the performance test, or by arranging a rescheduled date with the Administrator (or delegated State or local agency) by mutual agreement.

(e) The owner or operator of an affected facility shall provide, or cause to be provided, performance testing facilities as follows:

(1) Sampling ports adequate for test methods applicable to such facility. This includes (i) constructing the air pollution control system such that volumetric flow rates and pollutant emission rates can be accurately determined by applicable test methods and procedures and (ii) providing a stack or duct free of cyclonic flow during performance tests, as demonstrated by applicable test methods and procedures.

(2) Safe sampling platform(s).

(3) Safe access to sampling platform(s).

(4) Utilities for sampling and testing equipment.

(f) Unless otherwise specified in the applicable subpart, each performance test shall consist of three separate runs using the applicable test method. Each run shall be conducted for the time and under the conditions specified in the applicable standard. For the purpose of determining compliance with an applicable standard, the arithmetic means of results of the three runs shall apply. In the event that a sample is accidentally lost or conditions occur in which one of the three runs must be discontinued because of forced shutdown, failure of an irreplaceable portion of the sample train, extreme meteorological conditions, or other circumstances, beyond the owner or operator's control, compliance may, upon the Administrator's approval, be determined using the

arithmetic mean of the results of the two other runs.

[36 FR 24877, Dec. 23, 1971, as amended at 39 FR 9314, Mar. 8, 1974; 42 FR 57126, Nov. 1, 1977; 44 FR 33612, June 11, 1979; 54 FR 6662, Feb. 14, 1989; 54 FR 21344, May 17, 1989; 64 FR 7463, Feb. 12, 1999]

§ 60.9 Availability of information.

The availability to the public of information provided to, or otherwise obtained by, the Administrator under this part shall be governed by part 2 of this chapter. (Information submitted voluntarily to the Administrator for the purposes of §§ 60.5 and 60.6 is governed by §§ 2.201 through 2.213 of this chapter and not by § 2.301 of this chapter.)

§ 60.10 State authority.

The provisions of this part shall not be construed in any manner to preclude any State or political subdivision thereof from:

(a) Adopting and enforcing any emission standard or limitation applicable to an affected facility, provided that such emission standard or limitation is not less stringent than the standard applicable to such facility.

(b) Requiring the owner or operator of an affected facility to obtain permits, licenses, or approvals prior to initiating construction, modification, or operation of such facility.

§ 60.11 Compliance with standards and maintenance requirements.

(a) Compliance with standards in this part, other than opacity standards, shall be determined in accordance with performance tests established by § 60.8, unless otherwise specified in the applicable standard.

(b) Compliance with opacity standards in this part shall be determined by conducting observations in accordance with Reference Method 9 in appendix A of this part, any alternative method that is approved by the Administrator, or as provided in paragraph (e)(5) of this section. For purposes of determining initial compliance, the minimum total time of observations shall be 3 hours (30 6-minute averages) for the performance test or other set of observations (meaning those fugitive-type emission sources subject only to an opacity standard).

(c) The opacity standards set forth in this part shall apply at all times except during periods of startup, shutdown, malfunction, and as otherwise provided in the applicable standard.

(d) At all times, including periods of startup, shutdown, and malfunction, owners and operators shall, to the extent practicable, maintain and operate any affected facility including associated air pollution control equipment in a manner consistent with good air pollution control practice for minimizing emissions. Determination of whether acceptable operating and maintenance procedures are being used will be based on information available to the Administrator which may include, but is not limited to, monitoring results, opacity observations, review of operating and maintenance procedures, and inspection of the source.

(e)(1) For the purpose of demonstrating initial compliance, opacity observations shall be conducted concurrently with the initial performance test required in § 60.8 unless one of the following conditions apply. If no performance test under § 60.8 is required, then opacity observations shall be conducted within 60 days after achieving the maximum production rate at which the affected facility will be operated but no later than 180 days after initial startup of the facility. If visibility or other conditions prevent the opacity observations from being conducted concurrently with the initial performance test required under § 60.8, the source owner or operator shall reschedule the opacity observations as soon after the initial performance test as possible, but not later than 30 days thereafter, and shall advise the Administrator of the rescheduled date. In these cases, the 30-day prior notification to the Administrator required in § 60.7(a)(6) shall be waived. The rescheduled opacity observations shall be conducted (to the extent possible) under the same operating conditions that existed during the initial performance test conducted under § 60.8. The visible emissions observer shall determine whether visibility or other conditions prevent the opacity observations from

being made concurrently with the initial performance test in accordance with procedures contained in Reference Method 9 of appendix B of this part. Opacity readings of portions of plumes which contain condensed, uncombined water vapor shall not be used for purposes of determing compliance with opacity standards. The owner or operator of an affected facility shall make available, upon request by the Administrator, such records as may be necessary to determine the conditions under which the visual observations were made and shall provide evidence indicating proof of current visible observer emission certification. Except as provided in paragraph (e)(5) of this section, the results of continuous monitoring by transmissometer which indicate that the opacity at the time visual observations were made was not in excess of the standard are probative but not conclusive evidence of the actual opacity of an emission, provided that the source shall meet the burden of proving that the instrument used meets (at the time of the alleged violation) Performance Specification 1 in appendix B of this part, has been properly maintained and (at the time of the alleged violation) that the resulting data have not been altered in any way.

(2) Except as provided in paragraph (e)(3) of this section, the owner or operator of an affected facility to which an opacity standard in this part applies shall conduct opacity observations in accordance with paragraph (b) of this section, shall record the opacity of emissions, and shall report to the Administrator the opacity results along with the results of the initial performance test required under §60.8. The inability of an owner or operator to secure a visible emissions observer shall not be considered a reason for not conducting the opacity observations concurrent with the initial performance test.

(3) The owner or operator of an affected facility to which an opacity standard in this part applies may request the Administrator to determine and to record the opacity of emissions from the affected facility during the initial performance test and at such times as may be required. The owner or operator of the affected facility shall report the opacity results. Any request to the Administrator to determine and to record the opacity of emissions from an affected facility shall be included in the notification required in §60.7(a)(6). If, for some reason, the Administrator cannot determine and record the opacity of emissions from the affected facility during the performance test, then the provisions of paragraph (e)(1) of this section shall apply.

(4) An owner or operator of an affected facility using a continuous opacity monitor (transmissometer) shall record the monitoring data produced during the initial performance test required by §60.8 and shall furnish the Administrator a written report of the monitoring results along with Method 9 and §60.8 performance test results.

(5) An owner or operator of an affected facility subject to an opacity standard may submit, for compliance purposes, continuous opacity monitoring system (COMS) data results produced during any performance test required under §60.8 in lieu of Method 9 observation data. If an owner or operator elects to submit COMS data for compliance with the opacity standard, he shall notify the Administrator of that decision, in writing, at least 30 days before any performance test required under §60.8 is conducted. Once the owner or operator of an affected facility has notified the Administrator to that effect, the COMS data results will be used to determine opacity compliance during subsequent tests required under §60.8 until the owner or operator notifies the Administrator, in writing, to the contrary. For the purpose of determining compliance with the opacity standard during a performance test required under §60.8 using COMS data, the minimum total time of COMS data collection shall be averages of all 6-minute continuous periods within the duration of the mass emission performance test. Results of the COMS opacity determinations shall be submitted along with the results of the performance test required under §60.8. The owner or operator of an affected facility using a COMS for compliance purposes is responsible for demonstrating that the COMS meets the requirements specified in §60.13(c) of this part, that

the COMS has been properly maintained and operated, and that the resulting data have not been altered in any way. If COMS data results are submitted for compliance with the opacity standard for a period of time during which Method 9 data indicates noncompliance, the Method 9 data will be used to determine opacity compliance.

(6) Upon receipt from an owner or operator of the written reports of the results of the performance tests required by § 60.8, the opacity observation results and observer certification required by § 60.11(e)(1), and the COMS results, if applicable, the Administrator will make a finding concerning compliance with opacity and other applicable standards. If COMS data results are used to comply with an opacity standard, only those results are required to be submitted along with the performance test results required by § 60.8. If the Administrator finds that an affected facility is in compliance with all applicable standards for which performance tests are conducted in accordance with § 60.8 of this part but during the time such performance tests are being conducted fails to meet any applicable opacity standard, he shall notify the owner or operator and advise him that he may petition the Administrator within 10 days of receipt of notification to make appropriate adjustment to the opacity standard for the affected facility.

(7) The Administrator will grant such a petition upon a demonstration by the owner or operator that the affected facility and associated air pollution control equipment was operated and maintained in a manner to minimize the opacity of emissions during the performance tests; that the performance tests were performed under the conditions established by the Administrator; and that the affected facility and associated air pollution control equipment were incapable of being adjusted or operated to meet the applicable opacity standard.

(8) The Administrator will establish an opacity standard for the affected facility meeting the above requirements at a level at which the source will be able, as indicated by the performance and opacity tests, to meet the opacity standard at all times during which the source is meeting the mass or concentration emission standard. The Administrator will promulgate the new opacity standard in the FEDERAL REGISTER.

(f) Special provisions set forth under an applicable subpart shall supersede any conflicting provisions in paragraphs (a) through (e) of this section.

(g) For the purpose of submitting compliance certifications or establishing whether or not a person has violated or is in violation of any standard in this part, nothing in this part shall preclude the use, including the exclusive use, of any credible evidence or information, relevant to whether a source would have been in compliance with applicable requirements if the appropriate performance or compliance test or procedure had been performed.

[38 FR 28565, Oct. 15, 1973, as amended at 39 FR 39873, Nov. 12, 1974; 43 FR 8800, Mar. 3, 1978; 45 FR 23379, Apr. 4, 1980; 48 FR 48335, Oct. 18, 1983; 50 FR 53113, Dec. 27, 1985; 51 FR 1790, Jan. 15, 1986; 52 FR 9781, Mar. 26, 1987; 62 FR 8328, Feb. 24, 1997]

§ 60.12 Circumvention.

No owner or operator subject to the provisions of this part shall build, erect, install, or use any article, machine, equipment or process, the use of which conceals an emission which would otherwise constitute a violation of an applicable standard. Such concealment includes, but is not limited to, the use of gaseous diluents to achieve compliance with an opacity standard or with a standard which is based on the concentration of a pollutant in the gases discharged to the atmosphere.

[39 FR 9314, Mar. 8, 1974]

§ 60.13 Monitoring requirements.

(a) For the purposes of this section, all continuous monitoring systems required under applicable subparts shall be subject to the provisions of this section upon promulgation of performance specifications for continuous monitoring systems under appendix B to this part and, if the continuous monitoring system is used to demonstrate compliance with emission limits on a continuous basis, appendix F to this part, unless otherwise specified in an

applicable subpart or by the Administrator. Appendix F is applicable December 4, 1987.

(b) All continuous monitoring systems and monitoring devices shall be installed and operational prior to conducting performance tests under §60.8. Verification of operational status shall, as a minimum, include completion of the manufacturer's written requirements or recommendations for installation, operation, and calibration of the device.

(c) If the owner or operator of an affected facility elects to submit continous opacity monitoring system (COMS) data for compliance with the opacity standard as provided under §60.11(e)(5), he shall conduct a performance evaluation of the COMS as specified in Performance Specification 1, appendix B, of this part before the performance test required under §60.8 is conducted. Otherwise, the owner or operator of an affected facility shall conduct a performance evaluation of the COMS or continuous emission monitoring system (CEMS) during any performance test required under §60.8 or within 30 days thereafter in accordance with the applicable performance specification in appendix B of this part, The owner or operator of an affected facility shall conduct COMS or CEMS performance evaluations at such other times as may be required by the Administrator under section 114 of the Act.

(1) The owner or operator of an affected facility using a COMS to determine opacity compliance during any performance test required under §60.8 and as described in §60.11(e)(5) shall furnish the Administrator two or, upon request, more copies of a written report of the results of the COMS performance evaluation described in paragraph (c) of this section at least 10 days before the performance test required under §60.8 is conducted.

(2) Except as provided in paragraph (c)(1) of this section, the owner or operator of an affected facility shall furnish the Administrator within 60 days of completion two or, upon request, more copies of a written report of the results of the performance evaluation.

(d)(1) Owners and operators of all continuous emission monitoring systems installed in accordance with the provisions of this part shall check the zero (or low-level value between 0 and 20 percent of span value) and span (50 to 100 percent of span value) calibration drifts at least once daily in accordance with a written procedure. The zero and span shall, as a minimum, be adjusted whenever the 24-hour zero drift or 24-hour span drift exceeds two times the limits of the applicable performance specifications in appendix B. The system must allow the amount of excess zero and span drift measured at the 24-hour interval checks to be recorded and quantified, whenever specified. For continuous monitoring systems measuring opacity of emissions, the optical surfaces exposed to the effluent gases shall be cleaned prior to performing the zero and span drift adjustments except that for systems using automatic zero adjustments. The optical surfaces shall be cleaned when the cumulative automatic zero compensation exceeds 4 percent opacity.

(2) Unless otherwise approved by the Administrator, the following procedures shall be followed for continuous monitoring systems measuring opacity of emissions. Minimum procedures shall include a method for producing a simulated zero opacity condition and an upscale (span) opacity condition using a certified neutral density filter or other related technique to produce a known obscuration of the light beam. Such procedures shall provide a system check of the analyzer internal optical surfaces and all electronic circuitry including the lamp and photodetector assembly.

(e) Except for system breakdowns, repairs, calibration checks, and zero and span adjustments required under paragraph (d) of this section, all continuous monitoring systems shall be in continuous operation and shall meet minimum frequency of operation requirements as follows:

(1) All continuous monitoring systems referenced by paragraph (c) of this section for measuring opacity of emissions shall complete a minimum of one cycle of sampling and analyzing for each successive 10-second period and one cycle of data recording for each successive 6-minute period.

(2) All continuous monitoring systems referenced by paragraph (c) of this section for measuring emissions, except opacity, shall complete a minimum of one cycle of operation (sampling, analyzing, and data recording) for each successive 15-minute period.

(f) All continuous monitoring systems or monitoring devices shall be installed such that representative measurements of emissions or process parameters from the affected facility are obtained. Additional procedures for location of continuous monitoring systems contained in the applicable Performance Specifications of appendix B of this part shall be used.

(g) When the effluents from a single affected facility or two or more affected facilities subject to the same emission standards are combined before being released to the atmosphere, the owner or operator may install applicable continuous monitoring systems on each effluent or on the combined effluent. When the affected facilities are not subject to the same emission standards, separate continuous monitoring systems shall be installed on each effluent. When the effluent from one affected facility is released to the atmosphere through more than one point, the owner or operator shall install an applicable continuous monitoring system on each separate effluent unless the installation of fewer systems is approved by the Administrator. When more than one continuous monitoring system is used to measure the emissions from one affected facility (e.g., multiple breechings, multiple outlets), the owner or operator shall report the results as required from each continuous monitoring system.

(h) Owners or operators of all continuous monitoring systems for measurement of opacity shall reduce all data to 6-minute averages and for continuous monitoring systems other than opacity to 1-hour averages for time periods as defined in §60.2. Six-minute opacity averages shall be calculated from 36 or more data points equally spaced over each 6-minute period. For continuous monitoring systems other than opacity, 1-hour averages shall be computed from four or more data points equally spaced over each 1-hour period. Data recorded during periods of continuous system breakdown, repair, calibration checks, and zero and span adjustments shall not be included in the data averages computed under this paragraph. For owners and operators complying with the requirements in §60.7(f) (1) or (2), data averages must include any data recorded during periods of monitor breakdown or malfunction. An arithmetic or integrated average of all data may be used. The data may be recorded in reduced or nonreduced form (e.g., ppm pollutant and percent O_2 or ng/J of pollutant). All excess emissions shall be converted into units of the standard using the applicable conversion procedures specified in subparts. After conversion into units of the standard, the data may be rounded to the same number of significant digits as used in the applicable subparts to specify the emission limit (e.g., rounded to the nearest 1 percent opacity).

(i) After receipt and consideration of written application, the Administrator may approve alternatives to any monitoring procedures or requirements of this part including, but not limited to the following:

(1) Alternative monitoring requirements when installation of a continuous monitoring system or monitoring device specified by this part would not provide accurate measurements due to liquid water or other interferences caused by substances with the effluent gases.

(2) Alternative monitoring requirements when the affected facility is infrequently operated.

(3) Alternative monitoring requirements to accommodate continuous monitoring systems that require additional measurements to correct for stack moisture conditions.

(4) Alternative locations for installing continuous monitoring systems or monitoring devices when the owner or operator can demonstrate that installation at alternate locations will enable accurate and representative measurements.

(5) Alternative methods of converting pollutant concentration measurements to units of the standards.

(6) Alternative procedures for performing daily checks of zero and span drift that do not involve use of span gases or test cells.

(7) Alternatives to the A.S.T.M. test methods or sampling procedures specified by any subpart.

(8) Alternative continuous monitoring systems that do not meet the design or performance requirements in Performance Specification 1, appendix B, but adequately demonstrate a definite and consistent relationship between its measurements and the measurements of opacity by a system complying with the requirements in Performance Specification 1. The Administrator may require that such demonstration be performed for each affected facility.

(9) Alternative monitoring requirements when the effluent from a single affected facility or the combined effluent from two or more affected facilities are released to the atmosphere through more than one point.

(j) An alternative to the relative accuracy test specified in Performance Specification 2 of appendix B may be requested as follows:

(1) An alternative to the reference method tests for determining relative accuracy is available for sources with emission rates demonstrated to be less than 50 percent of the applicable standard. A source owner or operator may petition the Administrator to waive the relative accuracy test in section 7 of Performance Specification 2 and substitute the procedures in section 10 if the results of a performance test conducted according to the requirements in §60.8 of this subpart or other tests performed following the criteria in §60.8 demonstrate that the emission rate of the pollutant of interest in the units of the applicable standard is less than 50 percent of the applicable standard. For sources subject to standards expressed as control efficiency levels, a source owner or operator may petition the Administrator to waive the relative accuracy test and substitute the procedures in section 10 of Performance Specification 2 if the control device exhaust emission rate is less than 50 percent of the level needed to meet the control efficiency requirement. The alternative procedures do not apply if the continuous emission monitoring system is used to determine compliance continuously with the applicable standard. The petition to waive the relative accuracy test shall include a detailed description of the procedures to be applied. Included shall be location and procedure for conducting the alternative, the concentration or response levels of the alternative RA materials, and the other equipment checks included in the alternative procedure. The Administrator will review the petition for completeness and applicability. The determination to grant a waiver will depend on the intended use of the CEMS data (e.g., data collection purposes other than NSPS) and may require specifications more stringent than in Performance Specification 2 (e.g., the applicable emission limit is more stringent than NSPS).

(2) The waiver of a CEMS relative accuracy test will be reviewed and may be rescinded at such time following successful completion of the alternative RA procedure that the CEMS data indicate the source emissions approaching the level of the applicable standard. The criterion for reviewing the waiver is the collection of CEMS data showing that emissions have exceeded 70 percent of the applicable standard for seven, consecutive, averaging periods as specified by the applicable regulation(s). For sources subject to standards expressed as control efficiency levels, the criterion for reviewing the waiver is the collection of CEMS data showing that exhaust emissions have exceeded 70 percent of the level needed to meet the control efficiency requirement for seven, consecutive, averaging periods as specified by the applicable regulation(s) [e.g., §60.45(g) (2) and (3), §60.73(e), and §60.84(e)]. It is the responsibility of the source operator to maintain records and determine the level of emissions relative to the criterion on the waiver of relative accuracy testing. If this criterion is exceeded, the owner or operator must notify the Administrator within 10 days of such occurrence and include a description of the nature and cause of the increasing emissions. The Administrator will review the notification and may rescind the waiver and require the owner or operator to conduct a relative accuracy test of the

CEMS as specified in section 7 of Performance Specification 2.

[40 FR 46255, Oct. 6, 1975; 40 FR 59205, Dec. 22, 1975, as amended at 41 FR 35185, Aug. 20, 1976; 48 FR 13326, Mar. 30, 1983; 48 FR 23610, May 25, 1983; 48 FR 32986, July 20, 1983; 52 FR 9782, Mar. 26, 1987; 52 FR 17555, May 11, 1987; 52 FR 21007, June 4, 1987; 64 FR 7463, Feb. 12, 1999]

§ 60.14 Modification.

(a) Except as provided under paragraphs (e) and (f) of this section, any physical or operational change to an existing facility which results in an increase in the emission rate to the atmosphere of any pollutant to which a standard applies shall be considered a modification within the meaning of section 111 of the Act. Upon modification, an existing facility shall become an affected facility for each pollutant to which a standard applies and for which there is an increase in the emission rate to the atmosphere.

(b) Emission rate shall be expressed as kg/hr of any pollutant discharged into the atmosphere for which a standard is applicable. The Administrator shall use the following to determine emission rate:

(1) Emission factors as specified in the latest issue of ''Compilation of Air Pollutant Emission Factors,'' EPA Publication No. AP–42, or other emission factors determined by the Administrator to be superior to AP–42 emission factors, in cases where utilization of emission factors demonstrate that the emission level resulting from the physical or operational change will either clearly increase or clearly not increase.

(2) Material balances, continuous monitor data, or manual emission tests in cases where utilization of emission factors as referenced in paragraph (b)(1) of this section does not demonstrate to the Administrator's satisfaction whether the emission level resulting from the physical or operational change will either clearly increase or clearly not increase, or where an owner or operator demonstrates to the Administrator's satisfaction that there are reasonable grounds to dispute the result obtained by the Administrator utilizing emission factors as referenced in paragraph (b)(1) of this section. When the emission rate is based on results from manual emission tests or continuous monitoring systems, the procedures specified in appendix C of this part shall be used to determine whether an increase in emission rate has occurred. Tests shall be conducted under such conditions as the Administrator shall specify to the owner or operator based on representative performance of the facility. At least three valid test runs must be conducted before and at least three after the physical or operational change. All operating parameters which may affect emissions must be held constant to the maximum feasible degree for all test runs.

(c) The addition of an affected facility to a stationary source as an expansion to that source or as a replacement for an existing facility shall not by itself bring within the applicability of this part any other facility within that source.

(d) [Reserved]

(e) The following shall not, by themselves, be considered modifications under this part:

(1) Maintenance, repair, and replacement which the Administrator determines to be routine for a source category, subject to the provisions of paragraph (c) of this section and § 60.15.

(2) An increase in production rate of an existing facility, if that increase can be accomplished without a capital expenditure on that facility.

(3) An increase in the hours of operation.

(4) Use of an alternative fuel or raw material if, prior to the date any standard under this part becomes applicable to that source type, as provided by § 60.1, the existing facility was designed to accommodate that alternative use. A facility shall be considered to be designed to accommodate an alternative fuel or raw material if that use could be accomplished under the facility's construction specifications as amended prior to the change. Conversion to coal required for energy considerations, as specified in section 111(a)(8) of the Act, shall not be considered a modification.

(5) The addition or use of any system or device whose primary function is the reduction of air pollutants, except

when an emission control system is removed or is replaced by a system which the Administrator determines to be less environmentally beneficial.

(6) The relocation or change in ownership of an existing facility.

(f) Special provisions set forth under an applicable subpart of this part shall supersede any conflicting provisions of this section.

(g) Within 180 days of the completion of any physical or operational change subject to the control measures specified in paragraph (a) of this section, compliance with all applicable standards must be achieved.

(h) No physical change, or change in the method of operation, at an existing electric utility steam generating unit shall be treated as a modification for the purposes of this section provided that such change does not increase the maximum hourly emissions of any pollutant regulated under this section above the maximum hourly emissions achievable at that unit during the 5 years prior to the change.

(i) Repowering projects that are awarded funding from the Department of Energy as permanent clean coal technology demonstration projects (or similar projects funded by EPA) are exempt from the requirements of this section provided that such change does not increase the maximum hourly emissions of any pollutant regulated under this section above the maximum hourly emissions achievable at that unit during the five years prior to the change.

(j)(1) Repowering projects that qualify for an extension under section 409(b) of the Clean Air Act are exempt from the requirements of this section, provided that such change does not increase the actual hourly emissions of any pollutant regulated under this section above the actual hourly emissions achievable at that unit during the 5 years prior to the change.

(2) This exemption shall not apply to any new unit that:

(i) Is designated as a replacement for an existing unit;

(ii) Qualifies under section 409(b) of the Clean Air Act for an extension of an emission limitation compliance date under section 405 of the Clean Air Act; and

(iii) Is located at a different site than the existing unit.

(k) The installation, operation, cessation, or removal of a temporary clean coal technology demonstration project is exempt from the requirements of this section. A *temporary clean coal control technology demonstration project*, for the purposes of this section is a clean coal technology demonstration project that is operated for a period of 5 years or less, and which complies with the State implementation plan for the State in which the project is located and other requirements necessary to attain and maintain the national ambient air quality standards during the project and after it is terminated.

(l) The reactivation of a very clean coal-fired electric utility steam generating unit is exempt from the requirements of this section.

[40 FR 58419, Dec. 16, 1975, amended at 43 FR 34347, Aug. 3, 1978; 45 FR 5617, Jan. 23, 1980; 57 FR 32339, July 21, 1992]

§ 60.15 Reconstruction.

(a) An existing facility, upon reconstruction, becomes an affected facility, irrespective of any change in emission rate.

(b) ''Reconstruction'' means the replacement of components of an existing facility to such an extent that:

(1) The fixed capital cost of the new components exceeds 50 percent of the fixed capital cost that would be required to construct a comparable entirely new facility, and

(2) It is technologically and economically feasible to meet the applicable standards set forth in this part.

(c) ''Fixed capital cost'' means the capital needed to provide all the depreciable components.

(d) If an owner or operator of an existing facility proposes to replace components, and the fixed capital cost of the new components exceeds 50 percent of the fixed capital cost that would be required to construct a comparable entirely new facility, he shall notify the Administrator of the proposed replacements. The notice must be postmarked 60 days (or as soon as practicable) before construction of the replacements is commenced and must include the following information:

(1) Name and address of the owner or operator.

(2) The location of the existing facility.

(3) A brief description of the existing facility and the components which are to be replaced.

(4) A description of the existing air pollution control equipment and the proposed air pollution control equipment.

(5) An estimate of the fixed capital cost of the replacements and of constructing a comparable entirely new facility.

(6) The estimated life of the existing facility after the replacements.

(7) A discussion of any economic or technical limitations the facility may have in complying with the applicable standards of performance after the proposed replacements.

(e) The Administrator will determine, within 30 days of the receipt of the notice required by paragraph (d) of this section and any additional information he may reasonably require, whether the proposed replacement constitutes reconstruction.

(f) The Administrator's determination under paragraph (e) shall be based on:

(1) The fixed capital cost of the replacements in comparison to the fixed capital cost that would be required to construct a comparable entirely new facility;

(2) The estimated life of the facility after the replacements compared to the life of a comparable entirely new facility;

(3) The extent to which the components being replaced cause or contribute to the emissions from the facility; and

(4) Any economic or technical limitations on compliance with applicable standards of performance which are inherent in the proposed replacements.

(g) Individual subparts of this part may include specific provisions which refine and delimit the concept of reconstruction set forth in this section.

[40 FR 58420, Dec. 16, 1975]

§ 60.16 Priority list.

PRIORITIZED MAJOR SOURCE CATEGORIES

Priority Number[1]	*Source Category*
1.	Synthetic Organic Chemical Manufacturing Industry (SOCMI) and Volatile Organic Liquid Storage Vessels and Handling Equipment
	(a) SOCMI unit processes
	(b) Volatile organic liquid (VOL) storage vessels and handling equipment
	(c) SOCMI fugitive sources
	(d) SOCMI secondary sources
2.	Industrial Surface Coating: Cans
3.	Petroleum Refineries: Fugitive Sources
4.	Industrial Surface Coating: Paper
5.	Dry Cleaning
	(a) Perchloroethylene
	(b) Petroleum solvent
6.	Graphic Arts
7.	Polymers and Resins: Acrylic Resins
8.	Mineral Wool (Deleted)
9.	Stationary Internal Combustion Engines
10.	Industrial Surface Coating: Fabric
11.	Industrial-Commercial-Institutional Steam Generating Units.
12.	Incineration: Non-Municipal (Deleted)
13.	Non-Metallic Mineral Processing
14.	Metallic Mineral Processing
15.	Secondary Copper (Deleted)
16.	Phosphate Rock Preparation
17.	Foundries: Steel and Gray Iron
18.	Polymers and Resins: Polyethylene
19.	Charcoal Production
20.	Synthetic Rubber
	(a) Tire manufacture
	(b) SBR production
21.	Vegetable Oil
22.	Industrial Surface Coating: Metal Coil
23.	Petroleum Transportation and Marketing
24.	By-Product Coke Ovens
25.	Synthetic Fibers
26.	Plywood Manufacture
27.	Industrial Surface Coating: Automobiles
28.	Industrial Surface Coating: Large Appliances
29.	Crude Oil and Natural Gas Production
30.	Secondary Aluminum
31.	Potash (Deleted)
32.	Lightweight Aggregate Industry: Clay, Shale, and Slate[2]
33.	Glass
34.	Gypsum
35.	Sodium Carbonate
36.	Secondary Zinc (Deleted)
37.	Polymers and Resins: Phenolic
38.	Polymers and Resins: Urea-Melamine
39.	Ammonia (Deleted)
40.	Polymers and Resins: Polystyrene
41.	Polymers and Resins: ABS-SAN Resins
42.	Fiberglass
43.	Polymers and Resins: Polypropylene
44.	Textile Processing
45.	Asphalt Processing and Asphalt Roofing Manufacture
46.	Brick and Related Clay Products
47.	Ceramic Clay Manufacturing (Deleted)
48.	Ammonium Nitrate Fertilizer
49.	Castable Refractories (Deleted)
50.	Borax and Boric Acid (Deleted)
51.	Polymers and Resins: Polyester Resins
52.	Ammonium Sulfate

PRIORITIZED MAJOR SOURCE CATEGORIES—Continued

Priority Number[1]	*Source Category*
53.	Starch
54.	Perlite
55.	Phosphoric Acid: Thermal Process (Deleted)
56.	Uranium Refining
57.	Animal Feed Defluorination (Deleted)
58.	Urea (for fertilizer and polymers)
59.	Detergent (Deleted)
	Other Source Categories
	Lead acid battery manufacture[3]
	Organic solvent cleaning[3]
	Industrial surface coating: metal furniture[3]
	Stationary gas turbines[4]
	Municipal solid waste landfills[4]

[1] Low numbers have highest priority, e.g., No. 1 is high priority, No. 59 is low priority.
[2] Formerly titled "Sintering: Clay and Fly Ash".
[3] Minor source category, but included on list since an NSPS is being developed for that source category.
[4] Not prioritized, since an NSPS for this major source category has already been promulgated.

[47 FR 951, Jan. 8, 1982, as amended at 47 FR 31876, July 23, 1982; 51 FR 42796, Nov. 25, 1986; 52 FR 11428, Apr. 8, 1987; 61 FR 9919, Mar. 12, 1996]

§ 60.17 Incorporations by reference.

The materials listed below are incorporated by reference in the corresponding sections noted. These incorporations by reference were approved by the Director of the Federal Register on the date listed. These materials are incorporated as they exist on the date of the approval, and a notice of any change in these materials will be published in the FEDERAL REGISTER. The materials are available for purchase at the corresponding address noted below, and all are available for inspection at the Office of the Federal Register, 800 North Capitol Street, NW., suite 700, Washington, DC and at the Library (MD–35), U.S. EPA, Research Triangle Park, NC.

(a) The following materials are available for purchase from at least one of the following addresses: American Society for Testing and Materials (ASTM), 1916 Race Street, Philadelphia, Pennsylvania 19103; or the University Microfilms International, 300 North Zeeb Road, Ann Arbor, MI 48106.

(1) ASTM D388–77, Standard Specification for Classification of Coals by Rank, incorporation by reference (IBR) approved for §§ 60.41(f); 60.45(f)(4)(i), (ii), (vi); 60.41a; 60.41b; 60.41c; 60.25(b), (c).

(2) ASTM D3178–73, Standard Test Methods for Carbon and Hydrogen in the Analysis Sample of Coal and Coke, IBR approved January 27, 1983 for § 60.45(f)(5)(i).

(3) ASTM D3176–74, Standard Method for Ultimate Analysis of Coal and Coke, IBR approved January 27, 1983, for § 60.45(f)(5)(i); appendix A to part 60, Method 19.

(4) ASTM D1137–53 (Reapproved 1975), Standard Method for Analysis of Natural Gases and Related Types of Gaseous Mixtures by the Mass Spectrometer, IBR approved January 27, 1983 for § 60.45(f)(5)(i).

(5) ASTM D1945–64 (Reapproved 1976), Standard Method for Analysis of Natural Gas by Gas Chromatography, IBR approved January 27, 1983 for § 60.45(f)(5)(i).

(6) ASTM D1946–77, Standard Method for Analysis of Reformed Gas by Gas Chromatography, IBR approved for §§ 60.45(f)(5)(i), 60.18(c)(3)(i), 60.18(f), 60.614(d)(2)(ii), 60.614(d)(4), 60.664(d)(2)(ii), 60.664(d)(4), 60.564(f), 60.704(d)(2)(ii) and 60.704(d)(4).

(7) ASTM D2015–77, Standard Test Method for Gross Calorific Value of Solid Fuel by the Adiabatic Bomb Calorimeter, IBR approved January 27, 1983 for § 60.45(f)(5)(ii); § 60.46(g); appendix A to part 60, Method 19.

(8) ASTM D1826–77, Standard Test Method for Calorific Value of Gases in Natural Gas Range by Continuous Recording Calorimeter, IBR approved January 27, 1983, for §§ 60.45(f)(5)(ii); 60.46(g); 60.296(f); appendix A to part 60, Method 19.

(9) ASTM D240–76, Standard Test Method for Heat of Combustion of Liquid Hydrocarbon Fuels by Bomb Calorimeter, IBR approved January 27, 1983, for § 60.46(g); 60.296(f); appendix A to part 60, Method 19.

(10) ASTM D396–78, Standard Specification for Fuel Oils, IBR approved for §§ 60.40b; 60.41b; 60.41c; 60.111(b); 60.111a(b).

(11) ASTM D2880–78, Standard Specification for Gas Turbine Fuel Oils, IBR approved January 27, 1983 for §§ 60.111(b), 60.111a(b), 60.335(b)(2).

(12) ASTM D975–78, Standard Specification for Diesel Fuel Oils, IBR approved January 27, 1983 for §§ 60.111(b), 60.111a(b).

(13) ASTM D323–82, Test Method for Vapor Pressure of Petroleum Products (Reid Method), IBR approved April 8, 1987 for §§ 60.111(1), 60.111a(g), 60.111b(g), and 60.116b(f)(2)(ii).

(14) ASTM A99–76, Standard Specification for Ferromanganese, IBR approved January 27, 1983 for § 60.261.

(15) ASTM A483–64 (Reapproved 1974), Standard Specification for Silicomanganese, IBR approved January 27, 1983 for § 60.261.

(16) ASTM A101–73, Standard Specification for Ferrochromium, IBR approved January 27, 1983 for § 60.261.

(17) ASTM A100–69 (Reapproved 1974), Standard Specification for Ferrosilicon, IBR approved January 27, 1983 for § 60.261.

(18) ASTM A482–76, Standard Specification for Ferrochromesilicon, IBR approved January 27, 1983 for § 60.261.

(19) ASTM A495–76, Standard Specification for Calcium-Silicon and Calcium Manganese-Silicon, IBR approved January 27, 1983 for § 60.261.

(20) ASTM D 1072–80, Standard Method for Total Sulfur in Fuel Gases, IBR approved July 31, 1984 for § 60.335(b)(2).

(21) ASTM D2986–71 (Reapproved 1978), Standard Method for Evaluation of Air, Assay Media by the Monodisperse DOP (Dioctyl Phthalate) Smoke Test, IBR approved January 27, 1983 for appendix A to part 60, Method 5, par. 3.1.1; Method 12, par. 4.1.1; Method 17, par. 3.1.1.

(22) ASTM D 1193–77, Standard Specification for Reagent Water, for appendix A to part 60, Method 6, par. 3.1.1; Method 7, par. 3.2.2; Method 7C, par. 3.1.1; Method 7D, par. 3.1.1; Method 8, par. 3.1.3; Method 12, par. 4.1.3; Method 25D, par. 3.2.2.4; Method 26A, par. 3.1.1; Method 29, pars. 4.2.2., 4.4.2., and 4.5.6.; Method 14A, par. 7.1.

(23) [Reserved]

(24) ASTM D2234–76, Standard Methods for Collection of a Gross Sample of Coal, IBR approved January 27, 1983, for appendix A to part 60, Method 19.

(25) ASTM D3173–73, Standard Test Method for Moisture in the Analysis Sample of Coal and Coke, IBR approved January 27, 1983, for appendix A to part 60, Method 19.

(26) ASTM D3177–75, Standard Test Methods for Total Sulfur in the Analysis Sample of Coal and Coke, IBR approved January 27, 1983, for appendix A to part 60, Method 19.

(27) ASTM D2013–72, Standard Method of Preparing Coal Samples for Analysis, IBR approved January 27, 1983, for appendix A to part 60, Method 19.

(28) ASTM D270–65 (Reapproved 1975), Standard Method of Sampling Petroleum and Petroleum Products, IBR approved January 27, 1983, for appendix A to part 60, Method 19.

(29) ASTM D737–85, Standard Test Method for Air Permeability of Textile Fabrics, IBR approved January 27, 1983 for §61.23(a).

(30) ASTM D1475–60 (Reapproved 1980), Standard Test Method for Density of Paint, Varnish, Lacquer, and Related Products, IBR approved January 27, 1983 for § 60.435(d)(1), appendix A to part 60, Method 24, par. 2.1, and Method 24A, par. 2.2.

(31) ASTM D2369–81, Standard Test Method for Volatile Content of Coatings, IBR approved January 27, 1983 for appendix A to part 60, Method 24.

(32) ASTM D3792–79, Standard Method for Water Content of Water-Reducible Paints by Direct Injection Into a Gas Chromatograph, IBR approved January 27, 1983 for appendix A to part 60, Method 24, par. 2.3.

(33) ASTM D4017–81, Standard Test Method for Water in Paints and Paint Materials by the Karl Fischer Titration Method, IBR approved January 27, 1983 for appendix A to part 60, Method 24, par. 2.4.

(34) ASTM E169–63 (Reapproved 1977), General Techniques of Ultraviolet Quantitative Analysis, IBR approved for § 60.485(d), § 60.593(b), and § 60.632(f).

(35) ASTM E168–67 (Reapproved 1977), General Techniques of Infrared Quantitative Analysis, IBR approved for § 60.485(d), § 60.593(b), and § 60.632(f).

(36) ASTM E260–73, General Gas Chromatography Procedures, IBR approved for § 60.485(d), § 60.593(b), and § 60.632(f).

(37) ASTM D2879–83, Test Method for Vapor Pressure—Temperature Relationship and Initial Decomposition Temperature of Liquids by Isoteniscope, IBR approved April 8, 1987 for §§ 60.485(e), 60.111b(f)(3), 60.116b(e)(3)(ii), and 60.116b(f)(2)(i).

(38) ASTM D2382–76, Heat of Combustion of Hydrocarbon Fuels by Bomb Calorimeter [High-Precision Method], IBR approved for §§ 60.18(f), 60.485(g), 60.614(d)(4), 60.664(d)(4), and 60.564(f), and 60.704(d)(4).

(39) ASTM D2504–67 (Reapproved 1977), Noncondensable Gases in C_3 and Lighter Hydrocarbon Products by Gas Chromatography, IBR approved for § 60.485(g).

(40) ASTM D86–78, Distillation of Petroleum Products, IBR approved for § 60.593(d), § 60.633(h), and § 60.562–2(d).

(41) [Reserved]

(42) ASTM D 3031–81, Standard Test Method for Total Sulfur in Natural Gas by Hydrogenation, IBR approved July 31, 1984 for § 60.335(b)(2).

(43) ASTM D 4084–82, Standard Method for Analysis of Hydrogen Sulfide in Gaseous Fuels (Lead Acetate Reaction Rate Method), IBR approved July 31, 1984 for § 60.335(b)(2).

(44) ASTM D 3246–81, Standard Method for Sulfur in Petroleum Gas by Oxidative Microcoulometry, IBR approved July 31, 1984 for § 60.335(b)(2).

(45) ASTM D2584–68, Standard Test Method for Ignition Loss of Cured Reinforced Resins, IBR approved February 25, 1985 for § 60.685(e).

(46) ASTM D3431–80, Standard Test Method for Trace Nitrogen in Liquid Petroleum Hydrocarbons (Microcoulometric Method), IBR approved November 25, 1986, for appendix A to part 60, Method 19.

(47) ASTM D129–64 (reapproved 1978), Standard Test Method for Sulfur in Petroleum Products (General Bomb Method), IBR approved for appendix A to part 60, Method 19.

(48) ASTM D1552–83, Standard Test Method for Sulfur in Petroleum Products (High Temperature Method), IBR approved for appendix A to part 60, Method 19.

(49) ASTM D1835–86, Standard Specification for Liquefied Petroleum (LP) Gases, to be approved for § 60.41b.

(50) ASTM D1835–86, Standard Specification for Liquefied Petroleum (LP) Gases, IBR approved for §§ 60.41b; 60.41c.

(51) ASTM D4057–81, Standard Practice for Manual Sampling of Petroleum and Petroleum Products, IBR approved for appendix A to part 60, Method 19.

(52) ASTM D4239–85, Standard Test Methods for Sulfur in the Analysis Sample of Coal and Coke Using High Temperature Tube Furnace Combustion Methods, IBR approved for appendix A to part 60, Method 19.

(53) ASTM D2016–74 (Reapproved 1983), Standard Test Methods for Moisture Content of Wood * * * for appendix A, Method 28.

(54) ASTM D4442–84, Standard Test Methods for Direct Moisture Content Measurement in Wood and Wood-base Materials * * * for appendix A, Method 28.

(55) [Reserved]

(56) ASTM D129–64 (Reapproved 1978), Standard Test Method for Sulfur in Petroleum Products (General Bomb Method), IBR approved August 17, 1989, for § 60.106(j)(2).

(57) ASTM D1552–83, Standard Test Method for Sulfur in Petroleum Products (High-Temperature Method), IBR approved August 17, 1989, for § 60.106(j)(2).

(58) ASTM D2622–87, Standard Test Method for Sulfur in Petroleum Products by X-Ray Spectrometry, IBR approved August 17, 1989, for § 60.106(j)(2).

(59) ASTM D1266–87, Standard Test Method for Sulfur in Petroleum Products (Lamp Method), IBR approved August 17, 1989, for § 60.106(j)(2).

(60) ASTM D2908–74, Standard Practice for Measuring Volatile Organic Matter in Water by Aqueous-Injection Gas Chromatography, IBR approved for § 60.564(j).

(61) ASTM D3370–76, Standard Practices for Sampling Water, IBR approved for § 60.564(j).

(62) ASTM D4457–85 Test Method for Determination of Dichloromethane and 1,1,1-Trichloroethane in Paints and Coatings by Direct Injection into a Gas Chromatograph, IBR approved for appendix A, Method 24.

(63) ASTM D 5403–93 Standard Test Methods for Volatile Content of Radiation Curable Materials. IBR approved September 11, 1995 for Method 24 of Appendix A.

(b) The following material is available for purchase from the Association of Official Analytical Chemists, 1111 North 19th Street, Suite 210, Arlington, VA 22209.

(1) AOAC Method 9, Official Methods of Analysis of the Association of Official Analytical Chemists, 11th edition, 1970, pp. 11–12, IBR approved January 27, 1983 for §§ 60.204(d)(2), 60.214(d)(2), 60.224(d)(2), 60.234(d)(2).

(c) The following material is available for purchase from the American Petroleum Institute, 1220 L Street NW., Washington, DC 20005.

(1) API Publication 2517, Evaporation Loss from External Floating Roof Tanks, Second Edition, February 1980, IBR approved January 27, 1983, for §§ 60.111(i), 60.111a(f), 60.111a(f)(1) and 60.116b(e)(2)(i).

(d) The following material is available for purchase from the Technical Association of the Pulp and Paper Industry (TAPPI), Dunwoody Park, Atlanta, GA 30341.

(1) TAPPI Method T624 os–68, IBR approved January 27, 1983 for § 60.285(d)(4).

(e) The following material is available for purchase from the Water Pollution Control Federation (WPCF), 2626 Pennsylvania Avenue NW., Washington, DC 20037.

(1) Method 209A, Total Residue Dried at 103–105 ° C, in Standard Methods for the Examination of Water and Wastewater, 15th Edition, 1980, IBR approved February 25, 1985 for § 60.683(b).

(f) The following material is available for purchase from the following address: Underwriter's Laboratories, Inc. (UL), 333 Pfingsten Road, Northbrook, IL 60062.

(1) UL 103, Sixth Edition revised as of September 3, 1986, Standard for Chimneys, Factory-built, Residential Type and Building Heating Appliance.

(g) The following material is available for purchase from the following address: West Coast Lumber Inspection Bureau, 6980 SW. Barnes Road, Portland, OR 97223.

(1) West Coast Lumber Standard Grading Rules No. 16, pages 5–21 and 90 and 91, September 3, 1970, revised 1984.

(h) The following material is available for purchase from the American Society of Mechanical Engineers (ASME), 345 East 47th Street, New York, NY 10017.

(1) ASME QRO–1–1994, Standard for the Qualification and Certification of Resource Recovery Facility Operators, IBR approved for §§ 60.56a, 60.54b(a), and 60.54b(b).

(2) ASME PTC 4.1–1964 (Reaffirmed 1991), Power Test Codes: Test Code for Steam Generating Units (with 1968 and 1969 Addenda), IBR approved for §§ 60.46b, 60.58a(h)(6)(ii), and 60.58b(i)(6)(ii).

(3) ASME Interim Supplement 19.5 on Instruments and Apparatus: Application, Part

II of Fluid Meters, 6th Edition (1971), IBR approved for §§ 60.58a(h)(6)(ii) and 60.58b(i)(6)(ii).

(i) Test Methods for Evaluating Solid Waste, Physical/Chemical Methods,'' EPA Publication SW–846 Third Edition (November 1986), as amended by Updates I (July, 1992), II (September 1994), IIA (August, 1993), and IIB (January, 1995). Test Method are incorporated by reference for appendix A to part 60, Method 29, pars. 2.2.1; 2.3.1; 2.5; 3.3.12.1; 3.3.12.2; 3.3.13; 3.3.14; 5.4.3; 6.2; 6.3; 7.2.1; 7.2.3; and Table 29–2. The Third Edition of SW–846 and Updates I, II, IIA, and IIB (document number 955–001–00000–1) are available from the Superintendent of Documents, U.S. Government Printing Office, Washington, DC 20402, (202) 512–1800. Copies may be obtained from the Library of the U.S. Environmental Protection Agency, 401 M Street, SW., Washington, DC 20460.

(j) Standard Methods for the Examination of Water and Wastewater, 16th edition, 1985. Method 303F Determination of Mercury by the Cold Vapor Technique. This document may be obtained from the American Public Health Association, 1015 18th Street, NW., Washington, DC 20036, and is incorporated by reference for Method 29, pars 5.4.3; 6.3; and 7.2.3 of appendix A to part 60.

(k) This material is available for purchase from the American Hospital Association (AHA) Service, Inc., Post Office Box 92683, Chicago, Illinois 60675–2683. You may inspect a copy at EPA's Air and Radiation Docket and Information Center (Docket A–91–61, Item IV–J–124), Room M–1500, 401 M Street SW., Washington, DC.

(1) An Ounce of Prevention: Waste Reduction Strategies for Health Care Facilities. American Society for Health Care Environmental Services of the American Hospital Association. Chicago, Illinois. 1993. AHA Catalog No. 057007. ISBN 0–87258–673–5. IBR approved for § 60.35e and § 60.55c.

(l) This material is available for purchase from the National Technical Information Services, 5285 Port Royal Road, Springfield, Virginia 22161. You may inspect a copy at EPA's Air and Radiation Docket and Information Center (Docket A–91–61, Item IV–J–125), Room M–1500, 401 M Street SW., Washington, DC.

(1) OMB Bulletin No. 93–17: Revised Statistical Definitions for Metropolitan Areas. Office of Management and Budget, June 30, 1993. NTIS No. PB 93–192–664. IBR approved for § 60.31e.

[48 FR 3735, Jan. 27, 1983]

EDITORIAL NOTE: For FEDERAL REGISTER citations affecting § 60.17, see the List of CFR Sections Affected in the Finding Aids section of this volume.

§ 60.18 General control device requirements.

(a) *Introduction.* This section contains requirements for control devices used to comply with applicable subparts of parts 60 and 61. The requirements are placed here for administrative convenience and only apply to facilities covered by subparts referring to this section.

(b) *Flares.* Paragraphs (c) through (f) apply to flares.

(c)(1) Flares shall be designed for and operated with no visible emissions as determined by the methods specified in paragraph (f), except for periods not to exceed a total of 5 minutes during any 2 consecutive hours.

(2) Flares shall be operated with a flame present at all times, as determined by the methods specified in paragraph (f).

(3) An owner/operator has the choice of adhering to either the heat content specifications in paragraph (c)(3)(ii) of this section and the maximum tip velocity specifications in paragraph (c)(4) of this section, or adhering to the requirements in paragraph (c)(3)(i) of this section.

(i)(A) Flares shall be used that have a diameter of 3 inches or greater, are nonassisted, have a hydrogen content of 8.0 percent (by volume), or greater, and are designed for and operated with an exit velocity less than 37.2 m/sec (122 ft/sec) and less than the velocity, V_{max}, as determined by the following equation:

$V_{max}=(X_{H2}-K_1)* K_2$

Where:

V_{max}=Maximum permitted velocity, m/sec.

K_1=Constant, 6.0 volume-percent hydrogen.

K_2=Constant, 3.9(m/sec)/volume-percent hydrogen.

X_{H2}=The volume-percent of hydrogen, on a wet basis, as calculated by using the American Society for Testing and Materials (ASTM) Method D1946–77. (Incorporated by reference as specified in §60.17).

(B) The actual exit velocity of a flare shall be determined by the method specified in paragraph (f)(4) of this section.

(ii) Flares shall be used only with the net heating value of the gas being combusted being 11.2 MJ/scm (300 Btu/scf) or greater if the flare is steam-assisted or air-assisted; or with the net heating value of the gas being combusted being 7.45 MJ/scm (200 Btu/scf) or greater if the flare is nonassisted. The net heating value of the gas being combusted shall be determined by the methods specified in paragraph (f)(3) of this section.

(4)(i) Steam-assisted and nonassisted flares shall be designed for and operated with an exit velocity, as determined by the methods specified in paragraph (f)(4) of this section, less than 18.3 m/sec (60 ft/sec), except as provided in paragraphs (c)(4) (ii) and (iii) of this section.

(ii) Steam-assisted and nonassisted flares designed for and operated with an exit velocity, as determined by the methods specified in paragraph (f)(4), equal to or greater than 18.3 m/sec (60 ft/sec) but less than 122 m/sec (400 ft/sec) are allowed if the net heating value of the gas being combusted is greater than 37.3 MJ/scm (1,000 Btu/scf).

(iii) Steam-assisted and nonassisted flares designed for and operated with an exit velocity, as determined by the methods specified in paragraph (f)(4), less than the velocity, V_{max}, as determined by the method specified in paragraph (f)(5), and less than 122 m/sec (400 ft/sec) are allowed.

(5) Air-assisted flares shall be designed and operated with an exit velocity less than the velocity, V_{max}, as determined by the method specified in paragraph (f)(6).

(6) Flares used to comply with this section shall be steam-assisted, air-assisted, or nonassisted.

(d) Owners or operators of flares used to comply with the provisions of this subpart shall monitor these control devices to ensure that they are operated and maintained in conformance with their designs. Applicable subparts will provide provisions stating how owners or operators of flares shall monitor these control devices.

(e) Flares used to comply with provisions of this subpart shall be operated at all times when emissions may be vented to them.

(f)(1) Reference Method 22 shall be used to determine the compliance of flares with the visible emission provisions of this subpart. The observation period is 2 hours and shall be used according to Method 22.

(2) The presence of a flare pilot flame shall be monitored using a thermocouple or any other equivalent device to detect the presence of a flame.

(3) The net heating value of the gas being combusted in a flare shall be calculated using the following equation:

$$H_T = K \sum_{i=1}^{n} C_i H_i$$

where:

H_T=Net heating value of the sample, MJ/scm; where the net enthalpy per mole of offgas is based on combustion at 25 °C and 760 mm Hg, but the standard temperature for determining the volume corresponding to one mole is 20 °C;

$$K = \text{Constant}, 1.740 \times 10^{-7} \left(\frac{1}{ppm}\right) \left(\frac{g\ mole}{scm}\right) \left(\frac{MJ}{kcal}\right)$$

where the standard temperature for $\left(\frac{g\ mole}{scm}\right)$ is 20°C;

C_i=Concentration of sample component i in ppm on a wet basis, as measured for organics by Reference Method 18 and measured for hydrogen and carbon monoxide by ASTM D1946–77 (Incorporated by reference as specified in § 60.17); and

H_i=Net heat of combustion of sample component i, kcal/g mole at 25 °C and 760 mm Hg. The heats of combustion may be determined using ASTM D2382–76 (incorporated by reference as specified in § 60.17) if published values are not available or cannot be calculated.

(4) The actual exit velocity of a flare shall be determined by dividing the volumetric flowrate (in units of standard temperature and pressure), as determined by Reference Methods 2, 2A, 2C, or 2D as appropriate; by the unobstructed (free) cross sectional area of the flare tip.

(5) The maximum permitted velocity, V_{max}, for flares complying with paragraph (c)(4)(iii) shall be determined by the following equation.

$$\text{Log}_{10}(V_{max})=(H_T+28.8)/31.7$$

V_{max}=Maximum permitted velocity, M/sec

28.8=Constant

31.7=Constant

H_T=The net heating value as determined in paragraph (f)(3).

(6) The maximum permitted velocity, V_{max}, for air-assisted flares shall be determined by the following equation.

$$V_{max}=8.706+0.7084\ (H_T)$$

V_{max}=Maximum permitted velocity, m/sec

8.706=Constant

0.7084=Constant

H_T=The net heating value as determined in paragraph (f)(3).

[51 FR 2701, Jan. 21, 1986, as amended at 63 FR 24444, May 4, 1998]

§ 60.19 General notification and reporting requirements.

(a) For the purposes of this part, time periods specified in days shall be measured in calendar days, even if the word ''calendar'' is absent, unless otherwise specified in an applicable requirement.

(b) For the purposes of this part, if an explicit postmark deadline is not specified in an applicable requirement for the submittal of a notification, application, report, or other written communication to the Administrator, the owner or operator shall postmark the submittal on or before the number of days specified in the applicable requirement. For example, if a notification must be submitted 15 days before a particular event is scheduled to take place, the notification shall be postmarked on or before 15 days preceding the event; likewise, if a notification must be submitted 15 days after a particular event takes place, the notification shall be delivered or postmarked on or before 15 days following the end of the event. The use of reliable non-Government mail carriers that provide indications of verifiable delivery of information required to be submitted to the Administrator, similar to the postmark provided by the U.S. Postal Service, or alternative means of delivery, including the use of electronic media, agreed to by the permitting authority, is acceptable.

(c) Notwithstanding time periods or postmark deadlines specified in this part for the submittal of information to the Administrator by an owner or operator, or the review of such information by the Administrator, such time periods or deadlines may be changed by mutual agreement between the owner or operator and the Administrator. Procedures governing the implementation of this provision are specified in paragraph (f) of this section.

(d) If an owner or operator of an affected facility in a State with delegated authority is required to submit periodic reports under this part to the State, and if the State has an established timeline for the submission of periodic reports that is consistent with the reporting frequency(ies) specified for such facility under this part, the owner or operator may change the dates by which periodic reports under this part shall be submitted (without changing the frequency of reporting) to be consistent with the State's schedule by mutual agreement between the owner or operator and the State. The allowance in the previous sentence applies in each State beginning 1 year after the affected facility is required to be in compliance with the applicable subpart in this part. Procedures governing the implementation of this provision are specified in paragraph (f) of this section.

(e) If an owner or operator supervises one or more stationary sources affected

by standards set under this part and standards set under part 61, part 63, or both such parts of this chapter, he/she may arrange by mutual agreement between the owner or operator and the Administrator (or the State with an approved permit program) a common schedule on which periodic reports required by each applicable standard shall be submitted throughout the year. The allowance in the previous sentence applies in each State beginning 1 year after the stationary source is required to be in compliance with the applicable subpart in this part, or 1 year after the stationary source is required to be in compliance with the applicable 40 CFR part 61 or part 63 of this chapter standard, whichever is latest. Procedures governing the implementation of this provision are specified in paragraph (f) of this section.

(f)(1)(i) Until an adjustment of a time period or postmark deadline has been approved by the Administrator under paragraphs (f)(2) and (f)(3) of this section, the owner or operator of an affected facility remains strictly subject to the requirements of this part.

(ii) An owner or operator shall request the adjustment provided for in paragraphs (f)(2) and (f)(3) of this section each time he or she wishes to change an applicable time period or postmark deadline specified in this part.

(2) Notwithstanding time periods or postmark deadlines specified in this part for the submittal of information to the Administrator by an owner or operator, or the review of such information by the Administrator, such time periods or deadlines may be changed by mutual agreement between the owner or operator and the Administrator. An owner or operator who wishes to request a change in a time period or postmark deadline for a particular requirement shall request the adjustment in writing as soon as practicable before the subject activity is required to take place. The owner or operator shall include in the request whatever information he or she considers useful to convince the Administrator that an adjustment is warranted.

(3) If, in the Administrator's judgment, an owner or operator's request for an adjustment to a particular time period or postmark deadline is warranted, the Administrator will approve the adjustment. The Administrator will notify the owner or operator in writing of approval or disapproval of the request for an adjustment within 15 calendar days of receiving sufficient information to evaluate the request.

(4) If the Administrator is unable to meet a specified deadline, he or she will notify the owner or operator of any significant delay and inform the owner or operator of the amended schedule.

[59 FR 12428, Mar. 16, 1994, as amended at 64 FR 7463, Feb. 12, 1998]

Subpart B—Adoption and Submittal of State Plans for Designated Facilities

SOURCE: 40 FR 53346, Nov. 17, 1975, unless otherwise noted.

§ 60.20 Applicability.

The provisions of this subpart apply to States upon publication of a final guideline document under § 60.22(a).

§ 60.21 Definitions.

Terms used but not defined in this subpart shall have the meaning given them in the Act and in subpart A:

(a) *Designated pollutant* means any air pollutant, emissions of which are subject to a standard of performance for new stationary sources but for which air quality criteria have not been issued, and which is not included on a list published under section 108(a) or section 112(b)(1)(A) of the Act.

(b) *Designated facility* means any existing facility (see § 60.2(aa)) which emits a designated pollutant and which would be subject to a standard of performance for that pollutant if the existing facility were an affected facility (see § 60.2(e)).

(c) *Plan* means a plan under section 111(d) of the Act which establishes emission standards for designated pollutants from designated facilities and provides for the implementation and enforcement of such emission standards.

(d) *Applicable plan* means the plan, or most recent revision thereof, which has

been approved under § 60.27(b) or promulgated under § 60.27(d).

(e) *Emission guideline* means a guideline set forth in subpart C of this part, or in a final guideline document published under § 60.22(a), which reflects the degree of emission reduction achievable through the application of the best system of emission reduction which (taking into account the cost of such reduction) the Administrator has determined has been adequately demonstrated for designated facilities.

(f) *Emission standard* means a legally enforceable regulation setting forth an allowable rate of emissions into the atmosphere, or prescribing equipment specifications for control of air pollution emissions.

(g) *Compliance schedule* means a legally enforceable schedule specifying a date or dates by which a source or category of sources must comply with specific emission standards contained in a plan or with any increments of progress to achieve such compliance.

(h) *Increments of progress* means steps to achieve compliance which must be taken by an owner or operator of a designated facility, including:

(1) Submittal of a final control plan for the designated facility to the appropriate air pollution control agency;

(2) Awarding of contracts for emission control systems or for process modifications, or issuance of orders for the purchase of component parts to accomplish emission control or process modification;

(3) Initiation of on-site construction or installation of emission control equipment or process change;

(4) Completion of on-site construction or installation of emission control equipment or process change; and

(5) Final compliance.

(i) *Region* means an air quality control region designated under section 107 of the Act and described in part 81 of this chapter.

(j) *Local agency* means any local governmental agency.

§ 60.22 Publication of guideline documents, emission guidelines, and final compliance times.

(a) Concurrently upon or after proposal of standards of performance for the control of a designated pollutant from affected facilities, the Administrator will publish a draft guideline document containing information pertinent to control of the designated pollutant form designated facilities. Notice of the availability of the draft guideline document will be published in the FEDERAL REGISTER and public comments on its contents will be invited. After consideration of public comments and upon or after promulgation of standards of performance for control of a designated pollutant from affected facilities, a final guideline document will be published and notice of its availability will be published in the FEDERAL REGISTER.

(b) Guideline documents published under this section will provide information for the development of State plans, such as:

(1) Information concerning known or suspected endangerment of public health or welfare caused, or contributed to, by the designated pollutant.

(2) A description of systems of emission reduction which, in the judgment of the Administrator, have been adequately demonstrated.

(3) Information on the degree of emission reduction which is achievable with each system, together with information on the costs and environmental effects of applying each system to designated facilities.

(4) Incremental periods of time normally expected to be necessary for the design, installation, and startup of identified control systems.

(5) An emission guideline that reflects the application of the best system of emission reduction (considering the cost of such reduction) that has been adequately demonstrated for designated facilities, and the time within which compliance with emission standards of equivalent stringency can be achieved. The Administrator will specify different emission guidelines or compliance times or both for different sizes, types, and classes of designated facilities when costs of control, physical limitations, geographical location, or similar factors make subcategorization appropriate. (6) Such other available information as the Administrator determines may contribute to the formulation of State plans.

(c) Except as provided in paragraph (d)(1) of this section, the emission guidelines and compliance times referred to in paragraph (b)(5) of this section will be proposed for comment upon publication of the draft guideline document, and after consideration of comments will be promulgated in subpart C of this part with such modifications as may be appropriate.

(d)(1) If the Administrator determines that a designated pollutant may cause or contribute to endangerment of public welfare, but that adverse effects on public health have not been demonstrated, he will include the determination in the draft guideline document and in the FEDERAL REGISTER notice of its availability. Except as provided in paragraph (d)(2) of this section, paragraph (c) of this section shall be inapplicable in such cases.

(2) If the Administrator determines at any time on the basis of new information that a prior determination under paragraph (d)(1) of this section is incorrect or no longer correct, he will publish notice of the determination in the FEDERAL REGISTER, revise the guideline document as necessary under paragraph (a) of this section, and propose and promulgate emission guidelines and compliance times under paragraph (c) of this section.

[40 FR 53346, Nov. 17, 1975, as amended at 54 FR 52189, Dec. 20, 1989]

§ 60.23 Adoption and submittal of State plans; public hearings.

(a)(1) Unless otherwise specified in the applicable subpart, within 9 months after notice of the availability of a final guideline document is published under § 60.22(a), each State shall adopt and submit to the Administrator, in accordance with § 60.4 of subpart A of this part, a plan for the control of the designated pollutant to which the guideline document applies.

(2) Within nine months after notice of the availability of a final revised guideline document is published as provided in § 60.22(d)(2), each State shall adopt and submit to the Administrator any plan revision necessary to meet the requirements of this subpart.

(b) If no designated facility is located within a State, the State shall submit a letter of certification to that effect to the Administrator within the time specified in paragraph (a) of this section. Such certification shall exempt the State from the requirements of this subpart for that designated pollutant.

(c)(1) Except as provided in paragraphs (c)(2) and (c)(3) of this section, the State shall, prior to the adoption of any plan or revision thereof, conduct one or more public hearings within the State on such plan or plan revision.

(2) No hearing shall be required for any change to an increment of progress in an approved compliance schedule unless the change is likely to cause the facility to be unable to comply with the final compliance date in the schedule.

(3) No hearing shall be required on an emission standard in effect prior to the effective date of this subpart if it was adopted after a public hearing and is at least as stringent as the corresponding emission guideline specified in the applicable guideline document published under § 60.22(a).

(d) Any hearing required by paragraph (c) of this section shall be held only after reasonable notice. Notice shall be given at least 30 days prior to the date of such hearing and shall include:

(1) Notification to the public by prominently advertising the date, time, and place of such hearing in each region affected;

(2) Availability, at the time of public announcement, of each proposed plan or revision thereof for public inspection in at least one location in each region to which it will apply;

(3) Notification to the Administrator;

(4) Notification to each local air pollution control agency in each region to which the plan or revision will apply; and

(5) In the case of an interstate region, notification to any other State included in the region.

(e) The State shall prepare and retain, for a minimum of 2 years, a record of each hearing for inspection by any interested party. The record shall contain, as a minimum, a list of witnesses together with the text of each presentation.

(f) The State shall submit with the plan or revision:

(1) Certification that each hearing required by paragraph (c) of this section was held in accordance with the notice required by paragraph (d) of this section; and

(2) A list of witnesses and their organizational affiliations, if any, appearing at the hearing and a brief written summary of each presentation or written submission.

(g) Upon written application by a State agency (through the appropriate Regional Office), the Administrator may approve State procedures designed to insure public participation in the matters for which hearings are required and public notification of the opportunity to participate if, in the judgment of the Administrator, the procedures, although different from the requirements of this subpart, in fact provide for adequate notice to and participation of the public. The Administrator may impose such conditions on his approval as he deems necessary. Procedures approved under this section shall be deemed to satisfy the requirements of this subpart regarding procedures for public hearings.

[40 FR 53346, Nov. 17, 1975, as amended at 60 FR 65414, Dec. 19, 1995]

§ 60.24 Emission standards and compliance schedules.

(a) Each plan shall include emission standards and compliance schedules.

(b)(1) Emission standards shall prescribe allowable rates of emissions except when it is clearly impracticable. Such cases will be identified in the guideline documents issued under § 60.22. Where emission standards prescribing equipment specifications are established, the plan shall, to the degree possible, set forth the emission reductions achievable by implementation of such specifications, and may permit compliance by the use of equipment determined by the State to be equivalent to that prescribed.

(2) Test methods and procedures for determining compliance with the emission standards shall be specified in the plan. Methods other than those specified in appendix A to this part may be specified in the plan if shown to be equivalent or alternative methods as defined in § 60.2 (t) and (u).

(3) Emission standards shall apply to all designated facilities within the State. A plan may contain emission standards adopted by local jurisdictions provided that the standards are enforceable by the State.

(c) Except as provided in paragraph (f) of this section, where the Administrator has determined that a designated pollutant may cause or contribute to endangerment of public health, emission standards shall be no less stringent than the corresponding emission guideline(s) specified in subpart C of this part, and final compliance shall be required as expeditiously as practicable but no later than the compliance times specified in subpart C of this part.

(d) Where the Administrator has determined that a designated pollutant may cause or contribute to endangerment of public welfare but that adverse effects on public health have not been demonstrated, States may balance the emission guidelines, compliance times, and other information provided in the applicable guideline document against other factors of public concern in establishing emission standards, compliance schedules, and variances. Appropriate consideration shall be given to the factors specified in § 60.22(b) and to information presented at the public hearing(s) conducted under § 60.23(c).

(e)(1) Any compliance schedule extending more than 12 months from the date required for submittal of the plan shall include legally enforceable increments of progress to achieve compliance for each designated facility or category of facilities. Increments of progress shall include, where practicable, each increment of progress specified in § 60.21(h) and shall include such additional increments of progress as may be necessary to permit close and effective supervision of progress toward final compliance.

(2) A plan may provide that compliance schedules for individual sources or categories of sources will be formulated after plan submittal. Any such schedule shall be the subject of a public hearing held according to § 60.23 and shall be submitted to the Administrator within 60 days after the date of adoption of the schedule but in no case

later than the date prescribed for submittal of the first semiannual report required by § 60.25(e).

(f) Unless otherwise specified in the applicable subpart on a case-by-case basis for particular designated facilities or classes of facilities, States may provide for the application of less stringent emissions standards or longer compliance schedules than those otherwise required by paragraph (c) of this section, provided that the State demonstrates with respect to each such facility (or class of facilities):

(1) Unreasonable cost of control resulting from plant age, location, or basic process design;

(2) Physical impossibility of installing necessary control equipment; or

(3) Other factors specific to the facility (or class of facilities) that make application of a less stringent standard or final compliance time significantly more reasonable.

(g) Nothing in this subpart shall be construed to preclude any State or political subdivision thereof from adopting or enforcing (1) emission standards more stringent than emission guidelines specified in subpart C of this part or in applicable guideline documents or (2) compliance schedules requiring final compliance at earlier times than those specified in subpart C or in applicable guideline documents.

[40 FR 53346, Nov. 17, 1975, as amended at 60 FR 65414, Dec. 19, 1995]

§ 60.25 Emission inventories, source surveillance, reports.

(a) Each plan shall include an inventory of all designated facilities, including emission data for the designated pollutants and information related to emissions as specified in appendix D to this part. Such data shall be summarized in the plan, and emission rates of designated pollutants from designated facilities shall be correlated with applicable emission standards. As used in this subpart, ''correlated'' means presented in such a manner as to show the relationship between measured or estimated amounts of emissions and the amounts of such emissions allowable under applicable emission standards.

(b) Each plan shall provide for monitoring the status of compliance with applicable emission standards. Each plan shall, as a minimum, provide for:

(1) Legally enforceable procedures for requiring owners or operators of designated facilities to maintain records and periodically report to the State information on the nature and amount of emissions from such facilities, and/or such other information as may be necessary to enable the State to determine whether such facilities are in compliance with applicable portions of the plan.

(2) Periodic inspection and, when applicable, testing of designated facilities.

(c) Each plan shall provide that information obtained by the State under paragraph (b) of this section shall be correlated with applicable emission standards (see § 60.25(a)) and made available to the general public.

(d) The provisions referred to in paragraphs (b) and (c) of this section shall be specifically identified. Copies of such provisions shall be submitted with the plan unless:

(1) They have been approved as portions of a preceding plan submitted under this subpart or as portions of an implementation plan submitted under section 110 of the Act, and

(2) The State demonstrates:

(i) That the provisions are applicable to the designated pollutant(s) for which the plan is submitted, and

(ii) That the requirements of § 60.26 are met.

(e) The State shall submit reports on progress in plan enforcement to the Administrator on an annual (calendar year) basis, commencing with the first full report period after approval of a plan or after promulgation of a plan by the Administrator. Information required under this paragraph must be included in the annual report required by § 51.321 of this chapter.

(f) Each progress report shall include:

(1) Enforcement actions initiated against designated facilities during the reporting period, under any emission standard or compliance schedule of the plan.

(2) Identification of the achievement of any increment of progress required by the applicable plan during the reporting period.

(3) Identification of designated facilities that have ceased operation during the reporting period.

(4) Submission of emission inventory data as described in paragraph (a) of this section for designated facilities that were not in operation at the time of plan development but began operation during the reporting period.

(5) Submission of additional data as necessary to update the information submitted under paragraph (a) of this section or in previous progress reports.

(6) Submission of copies of technical reports on all performance testing on designated facilities conducted under paragraph (b)(2) of this section, complete with concurrently recorded process data.

[40 FR 53346, Nov. 17, 1975, as amended at 44 FR 65071, Nov. 9, 1979]

§ 60.26 Legal authority.

(a) Each plan shall show that the State has legal authority to carry out the plan, including authority to:

(1) Adopt emission standards and compliance schedules applicable to designated facilities.

(2) Enforce applicable laws, regulations, standards, and compliance schedules, and seek injunctive relief.

(3) Obtain information necessary to determine whether designated facilities are in compliance with applicable laws, regulations, standards, and compliance schedules, including authority to require recordkeeping and to make inspections and conduct tests of designated facilities.

(4) Require owners or operators of designated facilities to install, maintain, and use emission monitoring devices and to make periodic reports to the State on the nature and amounts of emissions from such facilities; also authority for the State to make such data available to the public as reported and as correlated with applicable emission standards.

(b) The provisions of law or regulations which the State determines provide the authorities required by this section shall be specifically identified. Copies of such laws or regulations shall be submitted with the plan unless:

(1) They have been approved as portions of a preceding plan submitted under this subpart or as portions of an implementation plan submitted under section 110 of the Act, and

(2) The State demonstrates that the laws or regulations are applicable to the designated pollutant(s) for which the plan is submitted.

(c) The plan shall show that the legal authorities specified in this section are available to the State at the time of submission of the plan. Legal authority adequate to meet the requirements of paragraphs (a)(3) and (4) of this section may be delegated to the State under section 114 of the Act.

(d) A State governmental agency other than the State air pollution control agency may be assigned responsibility for carrying out a portion of a plan if the plan demonstrates to the Administrator's satisfaction that the State governmental agency has the legal authority necessary to carry out that portion of the plan.

(e) The State may authorize a local agency to carry out a plan, or portion thereof, within the local agency's jurisdiction if the plan demonstrates to the Administrator's satisfaction that the local agency has the legal authority necessary to implement the plan or portion thereof, and that the authorization does not relieve the State of responsibility under the Act for carrying out the plan or portion thereof.

§ 60.27 Actions by the Administrator.

(a) The Administrator may, whenever he determines necessary, extend the period for submission of any plan or plan revision or portion thereof.

(b) After receipt of a plan or plan revision, the Administrator will propose the plan or revision for approval or disapproval. The Administrator will, within four months after the date required for submission of a plan or plan revision, approve or disapprove such plan or revision or each portion thereof.

(c) The Administrator will, after consideration of any State hearing record, promptly prepare and publish proposed regulations setting forth a plan, or portion thereof, for a State if:

(1) The State fails to submit a plan within the time prescribed;

(2) The State fails to submit a plan revision required by §60.23(a)(2) within the time prescribed; or

(3) The Administrator disapproves the State plan or plan revision or any portion thereof, as unsatisfactory because the requirements of this subpart have not been met.

(d) The Administrator will, within six months after the date required for submission of a plan or plan revision, promulgate the regulations proposed under paragraph (c) of this section with such modifications as may be appropriate unless, prior to such promulgation, the State has adopted and submitted a plan or plan revision which the Administrator determines to be approvable.

(e)(1) Except as provided in paragraph (e)(2) of this section, regulations proposed and promulgated by the Administrator under this section will prescribe emission standards of the same stringency as the corresponding emission guideline(s) specified in the final guideline document published under § 60.22(a) and will require final compliance with such standards as expeditiously as practicable but no later than the times specified in the guideline document.

(2) Upon application by the owner or operator of a designated facility to which regulations proposed and promulgated under this section will apply, the Administrator may provide for the application of less stringent emission standards or longer compliance schedules than those otherwise required by this section in accordance with the criteria specified in § 60.24(f).

(f) If a State failed to hold a public hearing as required by § 60.23(c), the Administrator will provide opportunity for a hearing within the State prior to promulgation of a plan under paragraph (d) of this section.

§ 60.28 Plan revisions by the State.

(a) Plan revisions which have the effect of delaying compliance with applicable emission standards or increments of progress or of establishing less stringent emission standards shall be submitted to the Administrator within 60 days after adoption in accordance with the procedures and requirements applicable to development and submission of the original plan.

(b) More stringent emission standards, or orders which have the effect of accelerating compliance, may be submitted to the Administrator as plan revisions in accordance with the procedures and requirements applicable to development and submission of the original plan.

(c) A revision of a plan, or any portion thereof, shall not be considered part of an applicable plan until approved by the Administrator in accordance with this subpart.

§ 60.29 Plan revisions by the Administrator.

After notice and opportunity for public hearing in each affected State, the Administrator may revise any provision of an applicable plan if:

(a) The provision was promulgated by the Administrator, and

(b) The plan, as revised, will be consistent with the Act and with the requirements of this subpart.

Subpart C—Emission Guidelines and Compliance Times

§ 60.30 Scope.

The following subparts contain emission guidelines and compliance times for the control of certain designated pollutants in accordance with section 111(d) and section 129 of the Clean Air Act and subpart B of this part.

(a) Subpart Ca—[Reserved]

(b) Subpart Cb—Municipal Waste Combustors.

(c) Subpart Cc—Municipal Solid Waste Landfills.

(d) Subpart Cd—Sulfuric Acid Production Plants.

(e) Subpart Ce—Hospital/Medical/Infectious Waste Incinerators.

[62 FR 48379, Sept. 15, 1997]

§ 60.31 Definitions.

Terms used but not defined in this subpart have the meaning given them in the Act and in subparts A and B of this part.

[42 FR 55797, Oct. 18, 1977]

Subpart Ca [Reserved]

Subpart Cb—Emissions Guidelines and Compliance Times for Large Municipal Waste Combustors That are Constructed on or Before September 20, 1994

SOURCE: 60 FR 65415, Dec. 19, 1995, unless otherwise noted.

§ 60.30b Scope.

This subpart contains emission guidelines and compliance schedules for the control of certain designated pollutants from certain municipal waste combustors in accordance with section 111(d) and section 129 of the Clean Air Act and subpart B of this part. The provisions in these emission guidelines supersede the provisions of § 60.24(f) of subpart B of this part.

§ 60.31b Definitions.

Terms used but not defined in this subpart have the meaning given them in the Clean Air Act and subparts A, B, and Eb of this part.

Municipal waste combustor plant means one or more designated facilities (as defined in § 60.32b) at the same location.

[60 FR 65415, Dec. 19, 1995, as amended at 62 FR 45119, 45125, Aug. 25, 1997]

§ 60.32b Designated facilities.

(a) The designated facility to which these guidelines apply is each municipal waste combustor unit with a combustion capacity greater than 250 tons per day of municipal solid waste for which construction was commenced on or before September 20, 1994.

(b) Any municipal waste combustion unit that is capable of combusting more than 250 tons per day of municipal solid waste and is subject to a federally enforceable permit limiting the maximum amount of municipal solid waste that may be combusted in the unit to less than or equal to 11 tons per day is not subject to this subpart if the owner or operator:

(1) Notifies the EPA Administrator of an exemption claim,

(2) Provides a copy of the federally enforceable permit that limits the firing of municipal solid waste to less than 11 tons per day, and

(3) Keeps records of the amount of municipal solid waste fired on a daily basis.

(c) Physical or operational changes made to an existing municipal waste combustor unit primarily for the purpose of complying with emission guidelines under this subpart are not considered in determining whether the unit is a modified or reconstructed facility under subpart Ea or subpart Eb of this part.

(d) A qualifying small power production facility, as defined in section 3(17)(C) of the Federal Power Act (16 U.S.C. 796(17)(C)), that burns homogeneous waste (such as automotive tires or used oil, but not including refuse-derived fuel) for the production of electric energy is not subject to this subpart if the owner or operator of the facility notifies the EPA Administrator of this exemption and provides data documenting that the facility qualifies for this exemption.

(e) A qualifying cogeneration facility, as defined in section 3(18)(B) of the Federal Power Act (16 U.S.C. 796(18)(B)), that burns homogeneous waste (such as automotive tires or used oil, but not including refuse-derived fuel) for the production of electric energy and steam or forms of useful energy (such as heat) that are used for industrial, commercial, heating, or cooling purposes, is not subject to this subpart if the owner or operator of the facility notifies the EPA Administrator of this exemption and provides data documenting that the facility qualifies for this exemption.

(f) Any unit combusting a single-item waste stream of tires is not subject to this subpart if the owner or operator of the unit:

(1) Notifies the EPA Administrator of an exemption claim, and

(2) Provides data documenting that the unit qualifies for this exemption.

(g) Any unit required to have a permit under section 3005 of the Solid Waste Disposal Act is not subject to this subpart.

(h) Any materials recovery facility (including primary or secondary smelters) that combusts waste for the primary purpose of recovering metals is not subject to this subpart.

(i) Any cofired combustor, as defined under § 60.51b of subpart Eb of this part, that meets the capacity specifications in paragraph (a) of this section is not subject to this subpart if the owner or operator of the cofired combustor:

(1) Notifies the EPA Administrator of an exemption claim,

(2) Provides a copy of the federally enforceable permit (specified in the definition of cofired combustor in this section), and

(3) Keeps a record on a calendar quarter basis of the weight of municipal solid waste combusted at the cofired combustor and the weight of all other fuels combusted at the cofired combustor.

(j) Air curtain incinerators, as defined under § 60.51b of subpart Eb of this part, that meet the capacity specifications in paragraph (a) of this section, and that combust a fuel stream composed of 100 percent yard waste are exempt from all provisions of this subpart except the opacity standard under § 60.37b, the testing procedures under § 60.38b, and the reporting and recordkeeping provisions under § 60.39b.

(k) Air curtain incinerators that meet the capacity specifications in paragraph (a) of this section and that combust municipal solid waste other than yard waste are subject to all provisions of this subpart.

(l) Pyrolysis/combustion units that are an integrated part of a plastics/rubber recycling unit (as defined in § 60.51b) are not subject to this subpart if the owner or operator of the plastics/rubber recycling unit keeps records of the weight of plastics, rubber, and/or rubber tires processed on a calendar quarter basis; the weight of chemical plant feedstocks and petroleum refinery feedstocks produced and marketed on a calendar quarter basis; and the name and address of the purchaser of the feedstocks. The combustion of gasoline, diesel fuel, jet fuel, fuel oils, residual oil, refinery gas, petroleum coke, liquified petroleum gas, propane, or butane produced by chemical plants or petroleum refineries that use feedstocks produced by plastics/rubber recycling units are not subject to this subpart.

(m) Cement kilns firing municipal solid waste are not subject to this subpart.

[60 FR 65415, Dec. 19, 1995, as amended at 62 FR 45119, 45125, Aug. 25, 1997]

§ 60.33b Emission guidelines for municipal waste combustor metals, acid gases, organics, and nitrogen oxides.

(a) The emission limits for municipal waste combustor metals are specified in paragraphs (a)(1) through (a)(3) of this section.

(1) For approval, a State plan shall include emission limits for particulate matter and opacity at least as protective as the emission limits for particulate matter and opacity specified in paragraphs (a)(1)(i) through (a)(1)(iii) of this section.

(i) The emission limit for particulate matter contained in the gases discharged to the atmosphere from a designated facility is 27 milligrams per dry standard cubic meter, corrected to 7 percent oxygen.

(ii) [Reserved]

(iii) The emission limit for opacity exhibited by the gases discharged to the atmosphere from a designated facility is 10 percent (6-minute average).

(2) For approval, a State plan shall include emission limits for cadmium and lead at least as protective as the emission limits for cadmium and lead specified in paragraphs (a)(2)(i) through (a)(2)(iv) of this section.

(i) The emission limit for cadmium contained in the gases discharged to the atmosphere from a designated facility is 0.040 milligrams per dry standard cubic meter, corrected to 7 percent oxygen.

(ii) [Reserved]

(iii) The emission limit for lead contained in the gases discharged to the atmosphere from a designated facility is 0.49 milligrams per dry standard cubic meter, corrected to 7 percent oxygen.

(iv) [Reserved]

(3) For approval, a State plan shall include emission limits for mercury at least as protective as the emission limits specified in this paragraph. The

emission limit for mercury contained in the gases discharged to the atmosphere from a designated facility is 0.080 milligrams per dry standard cubic meter or 15 percent of the potential mercury emission concentration (85-percent reduction by weight), corrected to 7 percent oxygen, whichever is less stringent.

(4) For approval, a State plan shall be submitted by August 25, 1998 and shall include an emission limit for lead at least as protective as the emission limit for lead specified in this paragraph. The emission limit for lead contained in the gases discharged to the atmosphere from a designated facility is 0.44 milligrams per dry standard cubic meter, corrected to 7 percent oxygen.

(b) The emission limits for municipal waste combustor acid gases, expressed as sulfur dioxide and hydrogen chloride, are specified in paragraphs (b)(1) and (b)(2) of this section.

(1) For approval, a State plan shall include emission limits for sulfur dioxide at least as protective as the emission limits for sulfur dioxide specified in paragraphs (b)(1)(i) and (b)(1)(ii) of this section.

(i) The emission limit for sulfur dioxide contained in the gases discharged to the atmosphere from a designated facility is 31 parts per million by volume or 25 percent of the potential sulfur dioxide emission concentration (75-percent reduction by weight or volume), corrected to 7 percent oxygen (dry basis), whichever is less stringent. Compliance with this emission limit is based on a 24-hour daily geometric mean.

(ii) [Reserved]

(2) For approval, a State plan shall include emission limits for hydrogen chloride at least as protective as the emission limits for hydrogen chloride specified in paragraphs (b)(2)(i) and (b)(2)(ii) of this section.

(i) The emission limit for hydrogen chloride contained in the gases discharged to the atmosphere from a designated facility is 31 parts per million by volume or 5 percent of the potential hydrogen chloride emission concentration (95-percent reduction by weight or volume), corrected to 7 percent oxygen (dry basis), whichever is less stringent.

(ii) [Reserved]

(3) For approval, a State plan shall be submitted by August 25, 1998 and shall include emission limits for sulfur dioxide and hydrogen chloride at least as protective as the emission limits specified in paragraphs (b)(3)(i) and (b)(3)(ii) of this section.

(i) The emission limit for sulfur dioxide contained in the gases discharged to the atmosphere from a designated facility is 29 parts per million by volume or 25 percent of the potential sulfur dioxide emission concentration (75-percent reduction by weight or volume), corrected to 7 percent oxygen (dry basis), whichever is less stringent. Compliance with this emission limit is based on a 24-hour daily geometric mean.

(ii) The emission limit for hydrogen chloride contained in the gases discharged to the atmosphere from a designated facility is 29 parts per million by volume or 5 percent of the potential hydrogen chloride emission concentration (95-percent reduction by weight or volume), corrected to 7 percent oxygen (dry basis), whichever is less stringent.

(c) The emission limits for municipal waste combustor organics, expressed as total mass dioxins/furans, are specified in paragraphs (c)(1) and (c)(2) of this section.

(1) For approval, a State plan shall include an emission limit for dioxins/furans contained in the gases discharged to the atmosphere from a designated facility at least as protective as the emission limit for dioxins/furans specified in either paragraph (c)(1)(i) or (c)(1)(ii) of this section, as applicable.

(i) The emission limit for designated facilities that employ an electrostatic precipitator-based emission control system is 60 nanograms per dry standard cubic meter (total mass), corrected to 7 percent oxygen.

(ii) The emission limit for designated facilities that do not employ an electrostatic precipitator-based emission control system is 30 nanograms per dry standard cubic meter (total mass), corrected to 7 percent oxygen.

(2) [Reserved]

(d) For approval, a State plan shall include emission limits for nitrogen oxides at least as protective as the emission limits listed in table 1 of this

subpart for designated facilities. Table 1 provides emission limits for the nitrogen oxides concentration level for each type of designated facility.

TABLE 1—NITROGEN OXIDES GUIDELINES FOR DESIGNATED FACILITIES

Municipal waste combustor technology	Nitrogen oxides emission limit (parts per million by volume) [a]
Mass burn waterwall	205
Mass burn rotary waterwall	250
Refuse-derived fuel combustor	250
Fluidized bed combustor	240
Mass burn refractory combustors	no limit

[a] Corrected to 7 percent oxygen, dry basis.

(1) A State plan may allow nitrogen oxides emissions averaging as specified in paragraphs (d)(1)(i) through (d)(1)(v) of this section.

(i) The owner or operator of a municipal waste combustor plant may elect to implement a nitrogen oxides emissions averaging plan for the designated facilities that are located at that plant and that are subject to subpart Cb, except as specified in paragraphs (d)(1)(i)(A) and (d)(1)(i)(B) of this section.

(A) Municipal waste combustor units subject to subpart Ea or Eb cannot be included in the emissions averaging plan.

(B) Mass burn refractory municipal waste combustor units and other municipal waste combustor technologies not listed in paragraph (d)(1)(iii) of this section may not be included in the emissions averaging plan.

(ii) The designated facilities included in the nitrogen oxides emissions averaging plan must be identified in the initial compliance report specified in § 60.59b(f) or in the annual report specified in § 60.59b(g), as applicable, prior to implementing the averaging plan. The designated facilities being included in the averaging plan may be redesignated each calendar year. Partial year redesignation is allowable with State approval.

(iii) To implement the emissions averaging plan, the average daily (24-hour) nitrogen oxides emission concentration level for gases discharged from the designated facilities being included in the emissions averaging plan must be no greater than the levels specified in table 2 of this subpart. Table 2 provides emission limits for the nitrogen oxides concentration level for each type of designated facility.

TABLE 2—NITROGEN OXIDES LIMITS FOR EXISTING DESIGNATED FACILITIES INCLUDED IN AN EMISSIONS AVERAGING PLAN AT A MUNICPIAL WASTE COMBUSTOR PLANT[a]

Municipal waste combustor technology	Nitrogen oxides emission limit (parts per million by volume)[b]
Mass burn waterwall	185
Mass burn rotary waterwall	220
Refuse-derived fuel combustor	230
Fluidized bed combustor	220

[a] Mass burn refractory municipal waste combustors and other MWC technologies not listed above may not be included in an emissions averaging plan.

[b] Corrected to 7 percent oxygen, dry basis.

(iv) Under the emissions averaging plan, the average daily nitrogen oxides emissions specified in paragraph (d)(1)(iii) of this section shall be calculated using equation (1). Designated facilities that are offline shall not be included in calculating the average daily nitrogen oxides emission level.

$$NO_{X_{24-hr}} = \frac{\sum_{i=1}^{h}\left(NO_{X_i}\right)\left(S_i\right)}{\sum_{i=1}^{h}\left(S_i\right)} \qquad (1)$$

where:

$NO_{X\,24\text{-}hr}$=24-hr daily average nitrogen oxides emission concentration level for the emissions averaging plan (parts per million by volume corrected to 7 percent oxygen).

$NO_{X\,i\text{-}hr}$=24-hr daily average nitrogen oxides emission concentration level for designated facility i (parts per million by volume, corrected to 7 percent oxygen), calculated according to the procedures in § 60.58b(h) of this subpart.

S_i=maximum demonstrated municipal waste combustor unit load for designated facility i (pounds per hour steam or feedwater flow as determined in the most recent dioxin/furan performance test).

h=total number of designated facilities being included in the daily emissions average.

(v) For any day in which any designated facility included in the emissions averaging plan is offline, the owner or operator of the municipal waste combustor plant must demonstrate compliance according to either paragraph (d)(1)(v)(A) of this section or both paragraphs (d)(1)(v)(B) and (d)(1)(v)(C) of this section.

(A) Compliance with the applicable limits specified in table 2 of this subpart shall be demonstrated using the averaging procedure specified in paragraph (d)(1)(iv) of this section for the designated facilities that are online.

(B) For each of the designated facilities included in the emissions averaging plan, the nitrogen oxides emissions on a daily average basis shall be calculated and shall be equal to or less than the maximum daily nitrogen oxides emission level achieved by that designated facility on any of the days during which the emissions averaging plan was achieved with all designated facilities online during the most recent calendar quarter. The requirements of this paragraph do not apply during the first quarter of operation under the emissions averaging plan.

(C) The average nitrogen oxides emissions (kilograms per day) calculated according to paragraph (d)(1)(v)(C)(*2*) of this section shall not exceed the average nitrogen oxides emissions (kilograms per day) calculated according to paragraph (d)(1)(v)(C)(*1*) of this section.

(*1*) For all days during which the emissions averaging plan was implemented and achieved and during which all designated facilities were online, the average nitrogen oxides emissions shall be calculated. The average nitrogen oxides emissions (kilograms per day) shall be calculated on a calendar year basis according to paragraphs (d)(1)(v)(C)(*1*)(*i*) through (d)(1)(v)(C)(*1*)(*iii*) of this section.

(*i*) For each designated facility included in the emissions averaging plan, the daily amount of nitrogen oxides emitted (kilograms per day) shall be calculated based on the hourly nitrogen oxides data required under §60.38b(a) and specified under §60.58b(h)(5) of subpart Eb of this part, the flue gas flow rate determined using table 19–1 of EPA Reference Method 19 or a State-approved method, and the hourly average steam or feedwater flow rate.

(*ii*) The daily total nitrogen oxides emissions shall be calculated as the sum of the daily nitrogen oxides emissions from each designated facility calculated under paragraph (d)(1)(v)(C)(*1*)(*i*) of this section.

(*iii*) The average nitrogen oxides emissions (kilograms per day) on a calendar year basis shall be calculated as the sum of all daily total nitrogen oxides emissions calculated under paragraph (d)(1)(v)(C)(*1*)(*ii*) of this section divided by the number of calendar days for which a daily total was calculated.

(*2*) For all days during which one or more of the designated facilities under the emissions averaging plan was offline, the average nitrogen oxides emissions shall be calculated. The average nitrogen oxides emissions (kilograms per day) shall be calculated on a calendar year basis according to paragraphs (d)(1)(v)(C)(*2*)(*i*) through (d)(1)(v)(C)(*2*)(*iii*) of this section.

(*i*) For each designated facility included in the emissions averaging plan, the daily amount of nitrogen oxides emitted (kilograms per day) shall be calculated based on the hourly nitrogen oxides data required under §60.38b(a) and specified under §60.58b(h)(5) of subpart Eb of this part, the flue gas flow rate determined using table 19–1 of EPA Reference Method 19 or a State-approved method, and the hourly average steam or feedwater flow rate.

(*ii*) The daily total nitrogen oxides emissions shall be calculated as the sum of the daily nitrogen oxides emissions from each designated facility calculated under paragraph (d)(1)(v)(C)(*2*)(*i*) of this section.

(*iii*) The average nitrogen oxides emissions (kilograms per day) on a calendar year basis shall be calculated as the sum of all daily total nitrogen oxides emissions calculated under paragraph (d)(1)(v)(C)(*2*)(*ii*) of this section divided by the number of calendar days for which a daily total was calculated.

(2) A State plan may establish a program to allow owners or operators of municipal waste combustor plants to

engage in trading of nitrogen oxides emission credits. A trading program must be approved by the Administrator before implementation.

(3) For approval, a State plan shall be submitted by August 25, 1998 and shall include emission limits for nitrogen oxides from fluidized bed combustors at least as protective as the emission limits listed in paragraphs (d)(3)(i) and (d)(3)(ii) of this section.

(i) The emission limit for nitrogen oxides contained in the gases discharged to the atmosphere from a designated facility that is a fluidized bed combustor is 180 parts per million by volume, corrected to 7 percent oxygen.

(ii) If a State plan allows nitrogen oxides emissions averaging as specified in paragraphs (d)(1)(i) through (d)(1)(v) of this section, the emission limit for nitrogen oxides contained in the gases discharged to the atmosphere from a designated facility that is a fluidized bed combustor is 165 parts per million by volume, corrected to 7 percent oxygen.

[60 FR 65415, Dec. 19, 1995, as amended at 62 FR 45119, 45125, Aug. 25, 1997]

§ 60.34b Emission guidelines for municipal waste combustor operating practices.

(a) For approval, a State plan shall include emission limits for carbon monoxide at least as protective as the emission limits for carbon monoxide listed in table 3 of this subpart. Table 3 provides emission limits for the carbon monoxide concentration level for each type of designated facility.

TABLE 3.—MUNICIPAL WASTE COMBUSTOR OPERATING GUIDELINES

Municipal waste combustor technology	Carbon monoxide emissions level (parts per million by volume)[a]	Averaging time (hrs)[b]
Mass burn waterwall	100	4
Mass burn refractory	100	4
Mass burn rotary refractory	100	24
Mass burn rotary waterwall	250	24
Modular starved air	50	4
Modular excess air	50	4
Refuse-derived fuel stoker	200	24
Buddling fluidized bed combustor	100	4
Circulating fluidized bed combustor	100	4
Pulverized coal/refuse-derived fuel mixed fuel-fired combustor	150	4
Spreader stoker coal/refuse-derived fuel mixed fuel-fired combustor	200	24

[a] Measured at the combustor outlet in conjunction with a measurement of oxygen concentration, corrected to 7 percent oxygen, dry basis. Calculated as an arithmetic average.
[b] Averaging times are 4-hour or 24-hour block averages.

(b) For approval, a State plan shall include requirements for municipal waste combustor operating practices at least as protective as those requirements listed in § 60.53b(b) and (c) of subpart Eb of this part.

[60 FR 65415, Dec. 19, 1995, as amended at 62 FR 45120, 45125, Aug. 25, 1997]

§ 60.35b Emission guidelines for municipal waste combustor operator training and certification.

For approval, a State plan shall include requirements for designated facilities for municipal waste combustor operator training and certification at least as protective as those requirements listed in § 60.54b of subpart Eb of this part. The State plan shall require compliance with these requirements according to the schedule specified in § 60.39b(c)(4).

[60 FR 65415, Dec. 19, 1995, as amended at 62 FR 45120, Aug. 25, 1997]

§ 60.36b Emission guidelines for municipal waste combustor fugitive ash emissions.

For approval, a State plan shall include requirements for municipal waste combustor fugitive ash emissions at least as protective as those requirements listed in § 60.55b of subpart Eb of this part.

§ 60.37b Emission guidelines for air curtain incinerators.

For approval, a State plan shall include emission limits for opacity for air curtain incinerators at least as protective as those listed in § 60.56b of subpart Eb of this part.

§ 60.38b Compliance and performance testing.

(a) For approval, a State plan shall include the performance testing methods listed in § 60.58b of subpart Eb of this part, as applicable, except as provided for under § 60.24(b)(2) of subpart B of this part and paragraphs (b) and (c) of this section.

(b) For approval, a State plan shall include for designated facilities the alternative performance testing schedule for dioxins/furans specified in § 60.58b(g)(5)(iii) of subpart Eb of this part, as applicable, for those designated facilities that achieve a dioxin/furan emission level less than or equal to 15 nanograms per dry standard cubic meter total mass, corrected to 7 percent oxygen.

(c) [Reserved]

[60 FR 65415, Dec. 19, 1995, as amended at 62 FR 45120, Aug. 25, 1997]

§ 60.39b Reporting and recordkeeping guidelines and compliance schedules.

(a) For approval, a State plan shall include the reporting and recordkeeping provisions listed in § 60.59b of subpart Eb of this part, as applicable, except for the siting requirements under § 60.59b(a), (b)(5), and (d)(11) of subpart Eb of this part.

(b) Not later than December 19, 1996, each State in which a designated facility is located shall submit to the EPA Administrator a plan to implement and enforce all provisions of this subpart except those specified under § 60.33b (a)(4), (b)(3), and (d)(3). The compliance schedule specified in this paragraph is in accordance with section 129(b)(2) of the Act and supersedes the compliance schedule provided in § 60.23(a)(1) of subpart B of this part.

(c) For approval, a State plan shall include the compliance schedules specified in paragraphs (c)(1) through (c)(5) of this section.

(1) A State plan shall allow designated facilities to comply with all requirements of a State plan (or close) within 1 year after approval of the State plan, except as provided by paragraph (c)(1)(i) and (c)(1)(ii) of this section.

(i) A State plan that allows designated facilities more than 1 year but less than 3 years following the date of issuance of a revised construction or operation permit, if a permit modification is required, or more than 1 year but less than 3 years following approval of the State plan, if a permit modification is not required, shall include measurable and enforceable incremental steps of progress toward compliance. Suggested measurable and enforceable activities are specified in paragraphs (c)(1)(i)(A) through (c)(1)(i)(J) of this section.

(A) Date for obtaining services of an architectural and engineering firm regarding the air pollution control device(s);

(B) Date for obtaining design drawings of the air pollution control device(s);

(C) Date for submittal of permit modifications, if necessary;

(D) Date for submittal of the final control plan to the Administrator. [§ 60.21 (h)(1) of subpart B of this part.];

(E) Date for ordering the air pollution control device(s);

(F) Date for obtaining the major components of the air pollution control device(s);

(G) Date for initiation of site preparation for installation of the air pollution control device(s);

(H) Date for initiation of installation of the air pollution control device(s);

(I) Date for initial startup of the air pollution control device(s); and

(J) Date for initial performance test(s) of the air pollution control device(s).

(ii) A State plan that allows designated facilities more than 1 year but up to 3 years after State plan approval to close shall require a closure agreement. The closure agreement must include the date of plant closure.

(2) If the State plan requirements for a designated facility include a compliance schedule longer than 1 year after

approval of the State plan in accordance with paragraph (c)(1)(i) or (c)(1)(ii) of this section, the State plan submittal (for approval) shall include performance test results for dioxin/furan emissions for each designated facility that has a compliance schedule longer than 1 year following the approval of the State plan, and the performance test results shall have been conducted during or after 1990. The performance test shall be conducted according to the procedures in § 60.38b.

(3) [Reserved]

(4) A State plan shall require compliance with the municipal waste combustor operator training and certification requirements under § 60.35b according to the schedule specified in paragraphs (c)(4)(i) through (c)(4)(iii) of this section.

(i) [Reserved]

(ii) For designated facilities, the State plan shall require compliance with the municipal waste combustor operator training and certification requirements specified under § 60.54b (a) through (c) of subpart Eb of this part by the date 6 months after the date of startup or 12 months after State plan approval, whichever is later.

(iii) For designated facilities, the State plan shall require compliance with the requirements specified in § 60.54b (d), (f), and (g) of subpart Eb of this part no later than 6 months after startup or 12 months after State plan approval, whichever is later.

(A) The requirement specified in § 60.54b(d) of subpart Eb of this part does not apply to chief facility operators, shift supervisors, and control room operators who have obtained full certification from the American Society of Mechanical Engineers on or before the date of State plan approval.

(B) The owner or operator of a designated facility may request that the EPA Administrator waive the requirement specified in § 60.54b(d) of subpart Eb of this part for chief facility operators, shift supervisors, and control room operators who have obtained provisional certification from the American Society of Mechanical Engineers on or before the date of State plan approval.

(C) The initial training requirements specified in § 60.54b(f)(1) of subpart Eb of this part shall be completed no later than the date specified in paragraph (c)(4)(iii)(C)(*1*), (c)(4)(iii)(C)(*2*), or (c)(4)(iii)(C)(*3*), of this section whichever is later.

(*1*) The date 6 months after the date of startup of the affected facility;

(*2*) Twelve months after State plan approval; or

(*3*) The date prior to the day when the person assumes responsibilities affecting municipal waste combustor unit operation.

(5) A State plan shall require all designated facilities for which construction, modification, or reconstruction is commenced after June 26, 1987 to comply with the emission limit for mercury specified in § 60.33b(a)(3) and the emission limit for dioxins/furans specified in § 60.33b(c)(1) within 1 year following issuance of a revised construction or operation permit, if a permit modification is required, or within 1 year following approval of the State plan, whichever is later.

(d) In the event no plan for implementing the emission guidelines is approved by EPA, all designated facilities meeting the applicability requirements under § 60.32b shall be in compliance with all of the guidelines, except those specified under § 60.33b (a)(4), (b)(3), and (d)(3), no later than December 19, 2000.

(e) Not later than August 25, 1998, each State in which a designated facility is operating shall submit to the EPA Administrator a plan to implement and enforce all provisions of this subpart specified in § 60.33b (a)(4), (b)(3), and (d)(3).

(f) In the event no plan for implementing the emission guidelines is approved by EPA, all designated facilities meeting the applicability requirements under § 60.32b shall be in compliance with all of the guidelines, including those specified under § 60.33b (a)(4), (b)(3), and (d)(3), no later than August 26, 2002.

[60 FR 65415, Dec. 19, 1995, as amended at 62 FR 45120, 45125, Aug. 25, 1997]

Subpart Cc—Emission Guidelines and Compliance Times for Municipal Solid Waste Landfills

SOURCE: 61 FR 9919, Mar. 12, 1996, unless otherwise noted.

§ 60.30c Scope.

This subpart contains emission guidelines and compliance times for the control of certain designated pollutants from certain designated municipal solid waste landfills in accordance with section 111(d) of the Act and subpart B.

§ 60.31c Definitions.

Terms used but not defined in this subpart have the meaning given them in the Act and in subparts A, B, and WWW of this part.

Municipal solid waste landfill or *MSW landfill* means an entire disposal facility in a contiguous geographical space where household waste is placed in or on land. An MSW landfill may also receive other types of RCRA Subtitle D wastes such as commercial solid waste, nonhazardous sludge, conditionally exempt small quantity generator waste, and industrial solid waste. Portions of an MSW landfill may be separated by access roads. An MSW landfill may be publicly or privately owned. An MSW landfill may be a new MSW landfill, an existing MSW landfill or a lateral expansion.

§ 60.32c Designated facilities.

(a) The designated facility to which the guidelines apply is each existing MSW landfill for which construction, reconstruction or modification was commenced before May 30, 1991.

(b) Physical or operational changes made to an existing MSW landfill solely to comply with an emission guideline are not considered a modification or reconstruction and would not subject an existing MSW landfill to the requirements of subpart WWW [see § 60.750 of Subpart WWW].

(c) For purposes of obtaining an operating permit under title V of the Act, the owner or operator of a MSW landfill subject to this subpart with a design capacity less than 2.5 million megagrams or 2.5 million cubic meters is not subject to the requirement to obtain an operating permit for the landfill under part 70 or 71 of this chapter, unless the landfill is otherwise subject to either part 70 or 71. For purposes of submitting a timely application for an operating permit under part 70 or 71, the owner or operator of a MSW landfill subject to this subpart with a design capacity greater than or equal to 2.5 million megagrams and 2.5 million cubic meters on the effective date of EPA approval of the State's program under section 111(d) of the Act, and not otherwise subject to either part 70 or 71, becomes subject to the requirements of §§ 70.5(a)(1)(i) or 71.5(a)(1)(i) of this chapter 90 days after the effective date of such 111(d) program approval, even if the design capacity report is submitted earlier.

(d) When a MSW landfill subject to this subpart is closed, the owner or operator is no longer subject to the requirement to maintain an operating permit under part 70 or 71 of this chapter for the landfill if the landfill is not otherwise subject to the requirements of either part 70 or 71 and if either of the following conditions are met.

(1) The landfill was never subject to the requirement for a control system under § 60.33c(c) of this subpart; or

(2) The owner or operator meets the conditions for control system removal specified in § 60.752(b)(2)(v) of subpart WWW.

[61 FR 9919, Mar. 12, 1996, as amended at 63 FR 32750, June 16, 1998]

§ 60.33c Emission guidelines for municipal solid waste landfill emissions.

(a) For approval, a State plan shall include control of MSW landfill emissions at each MSW landfill meeting the following three conditions:

(1) The landfill has accepted waste at any time since November 8, 1987, or has additional design capacity available for future waste deposition;

(2) The landfill has a design capacity greater than or equal to 2.5 million megagrams and 2.5 million cubic meters. The landfill may calculate design capacity in either megagrams or cubic meters for comparison with the exemption values. Any density conversions

shall be documented and submitted with the design capacity report; and

(3) The landfill has a nonmethane organic compound emission rate of 50 megagrams per year or more.

(b) For approval, a State plan shall include the installation of a collection and control system meeting the conditions provided in §60.752(b)(2)(ii) of this part at each MSW landfill meeting the conditions in paragraph (a) of this section. The State plan shall include a process for State review and approval of the site-specific design plans for the gas collection and control system(s).

(c) For approval, a State plan shall include provisions for the control of collected MSW landfill emissions through the use of control devices meeting the requirements of paragraph (c)(1), (2), or (3) of this section, except as provided in §60.24.

(1) An open flare designed and operated in accordance with the parameters established in §60.18; or

(2) A control system designed and operated to reduce NMOC by 98 weight percent; or

(3) An enclosed combustor designed and operated to reduce the outlet NMOC concentration to 20 parts per million as hexane by volume, dry basis at 3 percent oxygen, or less.

(d) For approval, a State plan shall require each owner or operator of an MSW landfill having a design capacity less than 2.5 million megagrams by mass or 2.5 million cubic meters by volume to submit an initial design capacity report to the Administrator as provided in §60.757(a)(2) of subpart WWW by the date specified in §60.35c of this subpart. The landfill may calculate design capacity in either megagrams or cubic meters for comparison with the exemption values. Any density conversions shall be documented and submitted with the report. Submittal of the initial design capacity report shall fulfill the requirements of this subpart except as provided in paragraph (d)(1) and (d)(2) of this section.

(1) The owner or operator shall submit an amended design capacity report as provided in §60.757(a)(3) of subpart WWW. [Guidance: Note that if the design capacity increase is the result of a modification, as defined in §60.751 of subpart WWW, that was commenced on or after May 30, 1991, the landfill will become subject to subpart WWW instead of this subpart. If the design capacity increase is the result of a change in operating practices, density, or some other change that is not a modification, the landfill remains subject to this subpart.]

(2) When an increase in the maximum design capacity of a landfill with an initial design capacity less than 2.5 million megagrams or 2.5 million cubic meters results in a revised maximum design capacity equal to or greater than 2.5 million megagrams and 2.5 million cubic meters, the owner or operator shall comply with paragraph (e) of this section.

(e) For approval, a State plan shall require each owner or operator of an MSW landfill having a design capacity equal to or greater than 2.5 million megagrams and 2.5 million cubic meters to either install a collection and control system as provided in paragraph (b) of this section and §60.752(b)(2) of subpart WWW or calculate an initial NMOC emission rate for the landfill using the procedures specified in §60.34c of this subpart and §60.754 of subpart WWW. The NMOC emission rate shall be recalculated annually, except as provided in §60.757(b)(1)(ii) of subpart WWW.

(1) If the calculated NMOC emission rate is less than 50 megagrams per year, the owner or operator shall:

(i) Submit an annual emission report, except as provided for in §60.757(b)(1)(ii); and

(ii) Recalculate the NMOC emission rate annually using the procedures specified in §60.754(a)(1) of subpart WWW until such time as the calculated NMOC emission rate is equal to or greater than 50 megagrams per year, or the landfill is closed.

(2)(i) If the NMOC emission rate, upon initial calculation or annual recalculation required in paragraph (e)(1)(ii) of this section, is equal to or greater than 50 megagrams per year, the owner or operator shall install a collection and control system as provided in paragraph (b) of this section and §60.752(b)(2) of subpart WWW.

(ii) If the landfill is permanently closed, a closure notification shall be

submitted to the Administrator as provided in §60.35c of this subpart and §60.757(d) of subpart WWW.

[61 FR 9919, Mar. 12, 1996, as amended at 63 FR 32750, June 16, 1998; 64 FR 9261, Feb. 24, 1999]

§ 60.34c Test methods and procedures.

For approval, a State plan shall include provisions for: the calculation of the landfill NMOC emission rate listed in §60.754, as applicable, to determine whether the landfill meets the condition in §60.33c(a)(3); the operational standards in §60.753; the compliance provisions in §60.755; and the monitoring provisions in §60.756.

§ 60.35c Reporting and recordkeeping guidelines.

For approval, a State plan shall include the recordkeeping and reporting provisions listed in §§60.757 and 60.758, as applicable, except as provided under §60.24.

(a) For existing MSW landfills subject to this subpart the initial design capacity report shall be submitted no later than 90 days after the effective date of EPA approval of the State's plan under section 111(d) of the Act.

(b) For existing MSW landfills covered by this subpart with a design capacity equal to or greater than 2.5 million megagrams and 2.5 million cubic meters, the initial NMOC emission rate report shall be submitted no later than 90 days after the effective date of EPA approval of the State's plan under section 111(d) of the Act.

[61 FR 9919, Mar. 12, 1996, as amended at 64 FR 9262, Feb. 24, 1999]

§ 60.36c Compliance times.

(a) Except as provided for under paragraph (b) of this section, planning, awarding of contracts, and installation of MSW landfill air emission collection and control equipment capable of meeting the emission guidelines established under §60.33c shall be accomplished within 30 months after the date the initial NMOC emission rate report shows NMOC emissions equal or exceed 50 megagrams per year.

(b) For each existing MSW landfill meeting the conditions in §60.33c(a)(1) and §60.33c(a)(2) whose NMOC emission rate is less than 50 megagrams per year on the effective date of the State emission standard, installation of collection and control systems capable of meeting emission guidelines in §60.33c shall be accomplished within 30 months of the date when the condition in §60.33c(a)(3) is met (i.e., the date of the first annual nonmethane organic compounds emission rate which equals or exceeds 50 megagrams per year).

[61 FR 9919, Mar. 12, 1996, as amended at 63 FR 32750, June 16, 1998]

Subpart Cd—Emissions Guidelines and Compliance Times for Sulfuric Acid Production Units

SOURCE: 60 FR 65414, Dec. 19, 1995, unless otherwise noted.

§ 60.30d Designated facilities.

Sulfuric acid production units. The designated facility to which §§60.31d and 60.32d apply is each existing ''sulfuric acid production unit'' as defined in §60.81(a) of subpart H of this part.

§ 60.31d Emissions guidelines.

Sulfuric acid production units. The emission guideline for designated facilities is 0.25 grams sulfuric acid mist (as measured by EPA Reference Method 8 of appendix A of this part) per kilogram (0.5 pounds per ton) of sulfuric acid produced, the production being expressed as 100 percent sulfuric acid.

§ 60.32d Compliance times.

Sulfuric acid production units. Planning, awarding of contracts, and installation of equipment capable of attaining the level of the emission guideline established under §60.31d can be accomplished within 17 months after the effective date of a State emission standard for sulfuric acid mist.

Subpart Ce—Emission Guidelines and Compliance Times for Hospital/Medical/Infectious Waste Incinerators

SOURCE: 62 FR 48379, Sept. 15, 1997, unless otherwise noted.

§ 60.30e Scope.

This subpart contains emission guidelines and compliance times for the control of certain designated pollutants from hospital/medical/infectious waste incinerator(s) (HMIWI) in accordance with sections 111 and 129 of the Clean Air Act and subpart B of this part. The provisions in these emission guidelines supersede the provisions of § 60.24(f) of subpart B of this part.

§ 60.31e Definitions.

Terms used but not defined in this subpart have the meaning given them in the Clean Air Act and in subparts A, B, and Ec of this part.

Standard Metropolitan Statistical Area or *SMSA* means any areas listed in OMB Bulletin No. 93–17 entitled ''Revised Statistical Definitions for Metropolitan Areas'' dated June 30, 1993 (incorporated by reference, see § 60.17).

§ 60.32e Designated facilities.

(a) Except as provided in paragraphs (b) through (h) of this section, the designated facility to which the guidelines apply is each individual HMIWI for which construction was commenced on or before June 20, 1996.

(b) A combustor is not subject to this subpart during periods when only pathological waste, low-level radioactive waste, and/or chemotherapeutic waste (all defined in § 60.51c) is burned, provided the owner or operator of the combustor:

(1) Notifies the Administrator of an exemption claim; and

(2) Keeps records on a calendar quarter basis of the periods of time when only pathological waste, low-level radioactive waste, and/or chemotherapeutic waste is burned.

(c) Any co-fired combustor (defined in § 60.51c) is not subject to this subpart if the owner or operator of the co-fired combustor:

(1) Notifies the Administrator of an exemption claim;

(2) Provides an estimate of the relative weight of hospital waste, medical/infectious waste, and other fuels and/or wastes to be combusted; and

(3) Keeps records on a calendar quarter basis of the weight of hospital waste and medical/infectious waste combusted, and the weight of all other fuels and wastes combusted at the co-fired combustor.

(d) Any combustor required to have a permit under Section 3005 of the Solid Waste Disposal Act is not subject to this subpart.

(e) Any combustor which meets the applicability requirements under subpart Cb, Ea, or Eb of this part (standards or guidelines for certain municipal waste combustors) is not subject to this subpart.

(f) Any pyrolysis unit (defined in § 60.51c) is not subject to this subpart.

(g) Cement kilns firing hospital waste and/or medical/infectious waste are not subject to this subpart.

(h) Physical or operational changes made to an existing HMIWI unit solely for the purpose of complying with emission guidelines under this subpart are not considered a modification and do not result in an existing HMIWI unit becoming subject to the provisions of subpart Ec (see § 60.50c).

(i) Beginning September 15, 2000, or on the effective date of an EPA approved operating permit program under Clean Air Act title V and the implementing regulations under 40 CFR part 70 in the State in which the unit is located, whichever date is later, designated facilities subject to this subpart shall operate pursuant to a permit issued under the EPA-approved operating permit program.

§ 60.33e Emission guidelines.

(a) For approval, a State plan shall include the requirements for emission limits at least as protective as those requirements listed in Table 1 of this subpart, except as provided for in paragraph (b) of this section.

(b) For approval, a State plan shall include the requirements for emission limits at least as protective as those requirements listed in Table 2 of this subpart for any small HMIWI which is located more than 50 miles from the boundary of the nearest Standard Metropolitan Statistical Area (defined in § 60.31e) and which burns less than 2,000 pounds per week of hospital waste and medical/infectious waste. The 2,000 lb/week limitation does not apply during performance tests.

(c) For approval, a State plan shall include the requirements for stack

opacity at least as protective as § 60.52c(b) of subpart Ec of this part.

§ 60.34e Operator training and qualification guidelines.

For approval, a State plan shall include the requirements for operator training and qualification at least as protective as those requirements listed in § 60.53c of subpart Ec of this part. The State plan shall require compliance with these requirements according to the schedule specified in § 60.39e(e).

§ 60.35e Waste management guidelines.

For approval, a State plan shall include the requirements for a waste management plan at least as protective as those requirements listed in § 60.55c of subpart Ec of this part.

§ 60.36e Inspection guidelines.

(a) For approval, a State plan shall require that each small HMIWI subject to the emission limits under § 60.33e(b) undergo an initial equipment inspection that is at least as protective as the following within 1 year following approval of the State plan:

(1) At a minimum, an inspection shall include the following:

(i) Inspect all burners, pilot assemblies, and pilot sensing devices for proper operation; clean pilot flame sensor, as necessary;

(ii) Ensure proper adjustment of primary and secondary chamber combustion air, and adjust as necessary;

(iii) Inspect hinges and door latches, and lubricate as necessary;

(iv) Inspect dampers, fans, and blowers for proper operation;

(v) Inspect HMIWI door and door gaskets for proper sealing;

(vi) Inspect motors for proper operation;

(vii) Inspect primary chamber refractory lining; clean and repair/replace lining as necessary;

(viii) Inspect incinerator shell for corrosion and/or hot spots;

(ix) Inspect secondary/tertiary chamber and stack, clean as necessary;

(x) Inspect mechanical loader, including limit switches, for proper operation, if applicable;

(xi) Visually inspect waste bed (grates), and repair/seal, as appropriate;

(xii) For the burn cycle that follows the inspection, document that the incinerator is operating properly and make any necessary adjustments;

(xiii) Inspect air pollution control device(s) for proper operation, if applicable;

(xiv) Inspect waste heat boiler systems to ensure proper operation, if applicable;

(xv) Inspect bypass stack components;

(xvi) Ensure proper calibration of thermocouples, sorbent feed systems and any other monitoring equipment; and

(xvii) Generally observe that the equipment is maintained in good operating condition.

(2) Within 10 operating days following an equipment inspection all necessary repairs shall be completed unless the owner or operator obtains written approval from the State agency establishing a date whereby all necessary repairs of the designated facility shall be completed.

(b) For approval, a State plan shall require that each small HMIWI subject to the emission limits under § 60.33e(b) undergo an equipment inspection annually (no more than 12 months following the previous annual equipment inspection), as outlined in paragraphs (a)(1) and (a)(2) of this section.

§ 60.37e Compliance, performance testing, and monitoring guidelines.

(a) Except as provided in paragraph (b) of this section, for approval, a State plan shall include the requirements for compliance and performance testing listed in § 60.56c of subpart Ec of this part, excluding the fugitive emissions testing requirements under § 60.56c(b)(12) and (c)(3).

(b) For approval, a State plan shall require any small HMIWI subject to the emission limits under § 60.33e(b) to meet the following compliance and performance testing requirements:

(1) Conduct the performance testing requirements in § 60.56c(a), (b)(1) through (b)(9), (b)(11) (Hg only), and (c)(1) of subpart Ec of this part. The 2,000 lb/week limitation under

§60.33e(b) does not apply during performance tests.

(2) Establish maximum charge rate and minimum secondary chamber temperature as site-specific operating parameters during the initial performance test to determine compliance with applicable emission limits.

(3) Following the date on which the initial performance test is completed or is required to be completed under §60.8, whichever date comes first, ensure that the designated facility does not operate above the maximum charge rate or below the minimum secondary chamber temperature measured as 3-hour rolling averages (calculated each hour as the average of the previous 3 operating hours) at all times except during periods of startup, shutdown and malfunction. Operating parameter limits do not apply during performance tests. Operation above the maximum charge rate or below the minimum secondary chamber temperature shall constitute a violation of the established operating parameter(s).

(4) Except as provided in paragraph (b)(5) of this section, operation of the designated facility above the maximum charge rate and below the minimum secondary chamber temperature (each measured on a 3-hour rolling average) simultaneously shall constitute a violation of the PM, CO, and dioxin/furan emission limits.

(5) The owner or operator of a designated facility may conduct a repeat performance test within 30 days of violation of applicable operating parameter(s) to demonstrate that the designated facility is not in violation of the applicable emission limit(s). Repeat performance tests conducted pursuant to this paragraph must be conducted using the identical operating parameters that indicated a violation under paragraph (b)(4) of this section.

(c) For approval, a State plan shall include the requirements for monitoring listed in §60.57c of subpart Ec of this part, except as provided for under paragraph (d) of this section.

(d) For approval, a State plan shall include requirements for any small HMIWI subject to the emission limits under §60.33e(b) to meet the following monitoring requirements:

(1) Install, calibrate (to manufacturers' specifications), maintain, and operate a device for measuring and recording the temperature of the secondary chamber on a continuous basis, the output of which shall be recorded, at a minimum, once every minute throughout operation.

(2) Install, calibrate (to manufacturers' specifications), maintain, and operate a device which automatically measures and records the date, time, and weight of each charge fed into the HMIWI.

(3) The owner or operator of a designated facility shall obtain monitoring data at all times during HMIWI operation except during periods of monitoring equipment malfunction, calibration, or repair. At a minimum, valid monitoring data shall be obtained for 75 percent of the operating hours per day and for 90 percent of the operating hours per calendar quarter that the designated facility is combusting hospital waste and/or medical/infectious waste.

§60.38e Reporting and recordkeeping guidelines.

(a) For approval, a State plan shall include the reporting and recordkeeping requirements listed in §60.58c(b), (c), (d), (e), and (f) of subpart Ec of this part, excluding §60.58c(b)(2)(ii) (fugitive emissions) and (b)(7) (siting).

(b) For approval, a State plan shall require the owner or operator of each small HMIWI subject to the emission limits under §60.33e(b) to:

(1) Maintain records of the annual equipment inspections, any required maintenance, and any repairs not completed within 10 days of an inspection or the timeframe established by the State regulatory agency; and

(2) Submit an annual report containing information recorded under paragraph (b)(1) of this section no later than 60 days following the year in which data were collected. Subsequent reports shall be sent no later than 12 calendar months following the previous report (once the unit is subject to permitting requirements under Title V of the Act, the owner or operator must submit these reports semiannually).

The report shall be signed by the facilities manager.

§ 60.39e Compliance times.

(a) Not later than September 15, 1998, each State in which a designated facility is operating shall submit to the Administrator a plan to implement and enforce the emission guidelines.

(b) Except as provided in paragraphs (c) and (d) of this section, State plans shall provide that designated facilities comply with all requirements of the State plan on or before the date 1 year after EPA approval of the State plan, regardless of whether a designated facility is identified in the State plan inventory required by §60.25(a) of subpart B of this part.

(c) State plans that specify measurable and enforceable incremental steps of progress towards compliance for designated facilities planning to install the necessary air pollution control equipment may allow compliance on or before the date 3 years after EPA approval of the State plan (but not later than the September 16, 2002. Suggested measurable and enforceable activities to be included in State plans are:

(1) Date for submitting a petition for site specific operating parameters under §60.56c(i) of subpart Ec of this part.

(2) Date for obtaining services of an architectural and engineering firm regarding the air pollution control device(s);

(3) Date for obtaining design drawings of the air pollution control device(s);

(4) Date for ordering the air pollution control device(s);

(5) Date for obtaining the major components of the air pollution control device(s);

(6) Date for initiation of site preparation for installation of the air pollution control device(s);

(7) Date for initiation of installation of the air pollution control device(s);

(8) Date for initial startup of the air pollution control device(s); and

(9) Date for initial compliance test(s) of the air pollution control device(s).

(d) State plans that include provisions allowing designated facilities to petition the State for extensions beyond the compliance times required in paragraph (b) of this section shall:

(1) Require that the designated facility requesting an extension submit the following information in time to allow the State adequate time to grant or deny the extension within 1 year after EPA approval of the State plan:

(i) Documentation of the analyses undertaken to support the need for an extension, including an explanation of why up to 3 years after EPA approval of the State plan is sufficient time to comply with the State plan while 1 year after EPA approval of the State plan is not sufficient. The documentation shall also include an evaluation of the option to transport the waste offsite to a commercial medical waste treatment and disposal facility on a temporary or permanent basis; and

(ii) Documentation of measurable and enforceable incremental steps of progress to be taken towards compliance with the emission guidelines.

(2) Include procedures for granting or denying the extension; and

(3) If an extension is granted, require compliance with the emission guidelines on or before the date 3 years after EPA approval of the State plan (but not later than September 16, 2002.

(e) For approval, a State plan shall require compliance with §60.34e—Operator training and qualification guidelines and §60.36e—Inspection guidelines by the date 1 year after EPA approval of a State plan.

(f) The Administrator shall develop, implement, and enforce a plan for existing HMIWI located in any State that has not submitted an approvable plan within date 2 years after September 15, 1997. Such plans shall ensure that each designated facility is in compliance with the provisions of this subpart no later than date 5 years after September 15, 1997.

TABLE 1 TO SUBPART CE—EMISSION LIMITS FOR SMALL, MEDIUM, AND LARGE HMIWI

Pollutant	Units (7 percent oxygen, dry basis)	Emission limits		
		HMIWI size		
		Small	Medium	Large
Particulate matter	Milligrams per dry standard cubic meter (grains per dry standard cubic foot).	115 (0.05)	69 (0.03)	34 (0.015).
Carbon monoxide	Parts per million by volume	40	40	40.
Dioxins/furans	Nanograms per dry standard cubic meter total dioxins/furans (grains per billion dry standard cubic feet) or nanograms per dry standard cubic meter TEQ (grains per billion dry standard cubic feet).	125 (55) or 2.3 (1.0)	125 (55) or 2.3 (1.0)	125 (55) or 2.3 (1.0).
Hydrogen chloride	Parts per million by volume or percent reduction	100 or 93%	100 or 93%	100 or 93%.
Sulfur dioxide	Parts per million by volume	55	55	55.
Nitrogen oxides	Parts per million by volume	250	250	250.
Lead	Milligrams per dry standard cubic meter (grains per thousand dry standard cubic feet) or percent reduction.	1.2 (0.52) or 70%	1.2 (0.52) or 70%	1.2 (0.52) or 70%.
Cadmium	Milligrams per dry standard cubic meter (grains per thousand dry standard cubic feet) or percent reduction.	0.16 (0.07) or 65%	0.16 (0.07) or 65%..	
Mercury	Milligrams per dry standard cubic meter (grains per thousand dry standard cubic feet) or percent reduction.	0.55 (0.24) or 85%	0.55 (0.24) or 85%	0.55 (0.24) or 85%.

TABLE 2 TO SUBPART CE—EMISSIONS LIMITS FOR SMALL HMIWI WHICH MEET THE CRITERIA UNDER § 60.33E(B)

Pollutant	Units (7 percent oxygen, dry basis)	HMIWI emission limits
Particulate matter	Milligrams per dry standard cubic meter (grains per dry standard cubic foot).	197 (0.086).
Carbon monoxide	Parts per million by volume	40.
Dioxins/furans	nanograms per dry standard cubic meter total dioxins/furans (grains per billion dry standard cubic feet) or nanograms per dry standard cubic meter TEQ (grains per billion dry standard cubic feet).	800 (350) or 15 (6.6).
Hydrogen chloride	Parts per million by volume	3100.
Sulfur dioxide	Parts per million by volume	55.
Nitrogen oxides	Parts per million by volume	250.
Lead	Milligrams per dry standard cubic meter (grains per thousand dry standard cubic feet).	10 (4.4).
Cadmium	Milligrams per dry standard cubic meter (grains per thousand dry standard cubic feet).	4 (1.7).
Mercury	Milligrams per dry standard cubic meter (grains per thousands dry standard cubic feet).	7.5 (3.3).

Subpart D—Standards of Performance for Fossil-Fuel-Fired Steam Generators for Which Construction is Commenced After August 17, 1971

§ 60.40 Applicability and designation of affected facility.

(a) The affected facilities to which the provisions of this subpart apply are:

(1) Each fossil-fuel-fired steam generating unit of more than 73 megawatts heat input rate (250 million Btu per hour).

(2) Each fossil-fuel and wood-residue-fired steam generating unit capable of firing fossil fuel at a heat input rate of more than 73 megawatts (250 million Btu per hour).

(b) Any change to an existing fossil-fuel-fired steam generating unit to accommodate the use of combustible materials, other than fossil fuels as defined in this subpart, shall not bring that unit under the applicability of this subpart.

(c) Except as provided in paragraph (d) of this section, any facility under paragraph (a) of this section that commenced construction or modification after August 17, 1971, is subject to the requirements of this subpart.

(d) The requirements of §§ 60.44 (a)(4), (a)(5), (b) and (d), and 60.45(f)(4)(vi) are applicable to lignite-fired steam generating units that commenced construction or modification after December 22, 1976.

(e) Any facility covered under subpart Da is not covered under this subpart.

[42 FR 37936, July 25, 1977, as amended at 43 FR 9278, Mar. 7, 1978; 44 FR 33612, June 17, 1979]

§ 60.41 Definitions.

As used in this subpart, all terms not defined herein shall have the meaning given them in the Act, and in subpart A of this part.

(a) *Fossil-fuel fired steam generating unit* means a furnace or boiler used in the process of burning fossil fuel for the purpose of producing steam by heat transfer.

(b) *Fossil fuel* means natural gas, petroleum, coal, and any form of solid, liquid, or gaseous fuel derived from such materials for the purpose of creating useful heat.

(c) *Coal refuse* means waste-products of coal mining, cleaning, and coal preparation operations (e.g. culm, gob, etc.) containing coal, matrix material, clay, and other organic and inorganic material.

(d) *Fossil fuel and wood residue-fired steam generating unit* means a furnace or boiler used in the process of burning fossil fuel and wood residue for the purpose of producing steam by heat transfer.

(e) *Wood residue* means bark, sawdust, slabs, chips, shavings, mill trim, and other wood products derived from wood processing and forest management operations.

(f) *Coal* means all solid fuels classified as anthracite, bituminous, subbituminous, or lignite by the American Society and Testing and Materials, Designation D388–77 (incorporated by reference—see §60.17).

[39 FR 20791, June 14, 1974, as amended at 40 FR 2803, Jan. 16, 1975; 41 FR 51398, Nov. 22, 1976; 43 FR 9278, Mar. 7, 1978; 48 FR 3736, Jan. 27, 1983]

§ 60.42 Standard for particulate matter.

(a) On and after the date on which the performance test required to be conducted by §60.8 is completed, no owner or operator subject to the provisions of this subpart shall cause to be discharged into the atmosphere from any affected facility any gases which:

(1) Contain particulate matter in excess of 43 nanograms per joule heat input (0.10 lb per million Btu) derived from fossil fuel or fossil fuel and wood residue.

(2) Exhibit greater than 20 percent opacity except for one six-minute period per hour of not more than 27 percent opacity.

(b)(1) On or after December 28, 1979, no owner or operator shall cause to be discharged into the atmosphere from the Southwestern Public Service Company's Harrington Station #1, in Amarillo, TX, any gases which exhibit greater than 35% opacity, except that a maximum or 42% opacity shall be permitted for not more than 6 minutes in any hour.

(2) Interstate Power Company shall not cause to be discharged into the atmosphere from its Lansing Station Unit No. 4 in Lansing, IA, any gases which exhibit greater than 32% opacity, except that a maximum of 39% opacity shall be permitted for not more than six minutes in any hour.

[39 FR 20792, June 14, 1974, as amended at 41 FR 51398, Nov. 22, 1976; 42 FR 61537, Dec. 5, 1977; 44 FR 76787, Dec. 28, 1979; 45 FR 36077, May 29, 1980; 45 FR 47146, July 14, 1980; 46 FR 57498, Nov. 24, 1981; 61 FR 49976, Sept. 24, 1996]

§ 60.43 Standard for sulfur dioxide.

(a) On and after the date on which the performance test required to be conducted by §60.8 is completed, no owner or operator subject to the provisions of this subpart shall cause to be discharged into the atmosphere from any affected facility any gases which contain sulfur dioxide in excess of:

(1) 340 nanograms per joule heat input (0.80 lb per million Btu) derived from liquid fossil fuel or liquid fossil fuel and wood residue.

(2) 520 nanograms per joule heat input (1.2 lb per million Btu) derived from solid fossil fuel or solid fossil fuel and wood residue, except as provided in paragraph (e) of this section.

(b) When different fossil fuels are burned simultaneously in any combination, the applicable standard (in ng/J) shall be determined by proration using the following formula:

$$PS_{SO2}=[y(340)+z(520)]/(y+z)$$

where:

PS_{SO2} is the prorated standard for sulfur dioxide when burning different fuels simultaneously, in nanograms per joule heat input derived from all fossil fuels fired or from all fossil fuels and wood residue fired,

y is the percentage of total heat input derived from liquid fossil fuel, and

z is the percentage of total heat input derived from solid fossil fuel.

(c) Compliance shall be based on the total heat input from all fossil fuels burned, including gaseous fuels.

(d) [Reserved]

(e) Units 1 and 2 (as defined in appendix G) at the Newton Power Station owned or operated by the Central Illinois Public Service Company will be in compliance with paragraph (a)(2) of this section if Unit 1 and Unit 2 individually comply with paragraph (a)(2) of this section or if the combined emission rate from Units 1 and 2 does not exceed 470 nanograms per joule (1.1 lb per million Btu) combined heat input to Units 1 and 2.

[39 FR 20792, June 14, 1974, as amended at 41 FR 51398, Nov. 22, 1976; 52 FR 28954, Aug. 4, 1987]

§ 60.44 Standard for nitrogen oxides.

(a) On and after the date on which the performance test required to be conducted by §60.8 is completed, no owner or operator subject to the provisions of this subpart shall cause to be discharged into the atmosphere from any affected facility any gases which contain nitrogen oxides, expressed as NO_2 in excess of:

(1) 86 nanograms per joule heat input (0.20 lb per million Btu) derived from gaseous fossil fuel.

(2) 129 nanograms per joule heat input (0.30 lb per million Btu) derived from liquid fossil fuel, liquid fossil fuel and wood residue, or gaseous fossil fuel and wood residue.

(3) 300 nanograms per joule heat input (0.70 lb per million Btu) derived from solid fossil fuel or solid fossil fuel and wood residue (except lignite or a solid fossil fuel containing 25 percent, by weight, or more of coal refuse).

(4) 260 nanograms per joule heat input (0.60 lb per million Btu) derived from lignite or lignite and wood residue (except as provided under paragraph (a)(5) of this section).

(5) 340 nanograms per joule heat input (0.80 lb per million Btu) derived from lignite which is mined in North Dakota, South Dakota, or Montana and which is burned in a cyclone-fired unit.

(b) Except as provided under paragraphs (c) and (d) of this section, when different fossil fuels are burned simultaneously in any combination, the applicable standard (in ng/J) is determined by proration using the following formula:

$$PS_{NOx} = \frac{w(260) + x(86) + y(130) + z(300)}{w + x + y + z}$$

where:

PS_{NOx}=is the prorated standard for nitrogen oxides when burning different fuels simultaneously, in nanograms per joule heat input derived from all fossil fuels fired or from all fossil fuels and wood residue fired;

w= is the percentage of total heat input derived from lignite;

x= is the percentage of total heat input derived from gaseous fossil fuel;

y= is the percentage of total heat input derived from liquid fossil fuel; and

z= is the percentage of total heat input derived from solid fossil fuel (except lignite).

(c) When a fossil fuel containing at least 25 percent, by weight, of coal refuse is burned in combination with gaseous, liquid, or other solid fossil fuel or wood residue, the standard for nitrogen oxides does not apply.

(d) Cyclone-fired units which burn fuels containing at least 25 percent of lignite that is mined in North Dakota, South Dakota, or Montana remain subject to paragraph (a)(5) of this section regardless of the types of fuel combusted in combination with that lignite.

[39 FR 20792, June 14, 1974, as amended at 41 FR 51398, Nov. 22, 1976; 43 FR 9278, Mar. 7, 1978; 51 FR 42797, Nov. 25, 1986]

§ 60.45 Emission and fuel monitoring.

(a) Each owner or operator shall install, calibrate, maintain, and operate continuous monitoring systems for measuring the opacity of emissions, sulfur dioxide emissions, nitrogen oxides emissions, and either oxygen or carbon dioxide except as provided in paragraph (b) of this section.

(b) Certain of the continuous monitoring system requirements under paragraph (a) of this section do not apply to owners or operators under the following conditions:

(1) For a fossil fuel-fired steam generator that burns only gaseous fossil fuel, continuous monitoring systems for measuring the opacity of emissions and sulfur dioxide emissions are not required.

(2) For a fossil fuel-fired steam generator that does not use a flue gas desulfurization device, a continuous monitoring system for measuring sulfur dioxide emissions is not required if the owner or operator monitors sulfur dioxide emissions by fuel sampling and analysis under paragraph (d) of this section.

(3) Notwithstanding §60.13(b), installation of a continuous monitoring system for nitrogen oxides may be delayed until after the initial performance tests under §60.8 have been conducted. If the owner or operator demonstrates during the performance test that emissions of nitrogen oxides are less than 70 percent of the applicable standards in §60.44, a continuous monitoring system for measuring nitrogen oxides emissions is not required. If the initial performance test results show that nitrogen oxide emissions are greater than 70 percent of the applicable standard, the owner or operator shall install a continuous monitoring system for nitrogen oxides within one year after the date of the initial performance tests under §60.8 and comply with all other

applicable monitoring requirements under this part.

(4) If an owner or operator does not install any continuous monitoring systems for sulfur oxides and nitrogen oxides, as provided under paragraphs (b)(1) and (b)(3) or paragraphs (b)(2) and (b)(3) of this section a continuous monitoring system for measuring either oxygen or carbon dioxide is not required.

(c) For performance evaluations under § 60.13(c) and calibration checks under § 60.13(d), the following procedures shall be used:

(1) Methods 6, 7, and 3B, as applicable, shall be used for the performance evaluations of sulfur dioxide and nitrogen oxides continuous monitoring systems. Acceptable alternative methods for Methods 6, 7, and 3B are given in § 60.46(d).

(2) Sulfur dioxide or nitric oxide, as applicable, shall be used for preparing calibration gas mixtures under Performance Specification 2 of appendix B to this part.

(3) For affected facilities burning fossil fuel(s), the span value for a continuous monitoring system measuring the opacity of emissions shall be 80, 90, or 100 percent and for a continuous monitoring system measuring sulfur oxides or nitrogen oxides the span value shall be determined as follows:

[In parts per million]

Fossil fuel	Span value for sulfur dioxide	Span value for nitrogen oxides
Gas	(1)	500
Liquid	1,000	500
Solid	1,500	1000
Combinations	1,000y+1,500z	500(x+y)+1,000z

[1] Not applicable.

where:

x=the fraction of total heat input derived from gaseous fossil fuel, and

y=the fraction of total heat input derived from liquid fossil fuel, and

z=the fraction of total heat input derived from solid fossil fuel.

(4) All span values computed under paragraph (c)(3) of this section for burning combinations of fossil fuels shall be rounded to the nearest 500 ppm.

(5) For a fossil fuel-fired steam generator that simultaneously burns fossil fuel and nonfossil fuel, the span value of all continuous monitoring systems shall be subject to the Administrator's approval.

(d) [Reserved]

(e) For any continuous monitoring system installed under paragraph (a) of this section, the following conversion procedures shall be used to convert the continuous monitoring data into units of the applicable standards (ng/J, lb/million Btu):

(1) When a continuous monitoring system for measuring oxygen is selected, the measurement of the pollutant concentration and oxygen concentration shall each be on a consistent basis (wet or dry). Alternative procedures approved by the Administrator shall be used when measurements are on a wet basis. When measurements are on a dry basis, the following conversion procedure shall be used:

$E=CF[20.9/(20.9—\text{percent } O_2)]$

where:

E, C, F, and $\%O_2$ are determined under paragraph (f) of this section.

(2) When a continuous monitoring system for measuring carbon dioxide is selected, the measurement of the pollutant concentration and carbon dioxide concentration shall each be on a consistent basis (wet or dry) and the following conversion procedure shall be used:

$E=CF_c$ [100/percent CO_2]

where:

E, C, F_c and $\%CO_2$ are determined under paragraph (f) of this section.

(f) The values used in the equations under paragraphs (e) (1) and (2) of this section are derived as follows:

(1) E=pollutant emissions, ng/J (lb/million Btu).

(2) C=pollutant concentration, ng/dscm (lb/dscf), determined by multiplying the average concentration (ppm) for each one-hour period by 4.15×10^4 M ng/dscm per ppm (2.59×10^{-9} M lb/dscf per ppm) where M=pollutant molecular weight, g/g-mole (lb/lb-mole). M=64.07 for sulfur dioxide and 46.01 for nitrogen oxides.

(3) $\%O_2$, $\%CO_2$=oxygen or carbon dioxide volume (expressed as percent), determined with equipment specified under paragraph (a) of this section.

(4) F, F_c=a factor representing a ratio of the volume of dry flue gases generated to the calorific value of the fuel

combusted (F), and a factor representing a ratio of the volume of carbon dioxide generated to the calorific value of the fuel combusted (F_c), respectively. Values of F and F_c are given as follows:

(i) For anthracite coal as classified according to ASTM D388–77 (incorporated by reference—see §60.17), $F=2{,}723\times10^{-17}$ dscm/J (10,140 dscf/million Btu and $F_c=0.532\times10^{-17}$ scm CO_2/J (1,980 scf CO_2/million Btu).

(ii) For subbituminous and bituminous coal as classified according to ASTM D388–77 (incorporated by reference—see §60.17), $F=2.637\times10^{-7}$ dscm/J (9,820 dscf/million Btu) and $F_c=0.486\times10^{-7}$ scm CO_2/J (1,810 scf CO_2/million Btu).

(iii) For liquid fossil fuels including crude, residual, and distillate oils, $F=2.476\times10^{-7}$ dscm/J (9,220 dscf/million Btu) and $F_c=0.384\times10^{-7}$ scm CO_2/J (1,430 scf CO_2/million Btu).

(iv) For gaseous fossil fuels, $F=2.347\times10^{-7}$ dscm/J (8,740 dscf/million Btu). For natural gas, propane, and butane fuels, $F_c=0.279\times10^{-7}$ scm CO_2/J (1,040 scf CO_2/million Btu) for natural gas, 0.322×10^{-7} scm CO_2/J (1,200 scf CO_2/million Btu) for propane, and 0.338×10^{-7} scm CO_2/J (1,260 scf CO_2/million Btu) for butane.

(v) For bark $F=2.589\times10^{-7}$ dscm/J (9,640 dscf/million Btu) and $F_c=0.500\times10^{-7}$ scm CO_2/J (1,840 scf CO_2/million Btu). For wood residue other than bark $F=2.492\times10^{-7}$ dscm/J (9,280 dscf/million Btu) and $F_c=0.494\times10^{-7}$ scm CO_2/J (1,860 scf CO_2/ million Btu).

(vi) For lignite coal as classified according to ASTM D388–77 (incorporated by reference—see §60.17), $F=2.659\times10^{-7}$ dscm/J (9,900 dscf/million Btu) and $F_c=0.516\times10^{-7}$ scm CO_2/J (1,920 scf CO_2/million Btu).

(5) The owner or operator may use the following equation to determine an *F* factor (dscm/J or dscf/million Btu) on a dry basis (if it is desired to calculate *F* on a wet basis, consult the Administrator) or F_c factor (scm CO_2/J, or scf CO_2/million Btu) on either basis in lieu of the *F* or F_c factors specified in paragraph (f)(4) of this section:

$$F = 10^{-6}\frac{\left[227.2\,(\text{pct. II}) + 95.5\,(\text{pct. C}) + 35.6\,(\text{pct. S}) + 8.7\,(\text{pct. N}) - 28.7\,(\text{pct. O})\right]}{\text{GCV}}$$

$$F_c = \frac{2.0\times10^{-5}\,(\text{pct. C})}{\text{GCV}\,(\text{SI units})}$$

$$F = \frac{10^6\left[3.64(\%H) + 1.53(\%C) + 0.57(\%S) + 0.14(\%N) - 0.46(\%O)\right]}{GCV\,(\text{English units})}$$

$$F_c = \frac{20.0(\%C)}{GCV\,(\text{SI units})}$$

$$F_c = \frac{321\times10^3(\%C)}{GCV\,(\text{English units})}$$

(i) H, C, S, N, and O are content by weight of hydrogen, carbon, sulfur, nitrogen, and oxygen (expressed as percent), respectively, as determined on the same basis as GCV by ultimate analysis of the fuel fired, using ASTM method D3178–74 or D3176 (solid fuels) or computed from results using ASTM method D1137–53(75), D1945–64(76), or D1946–77 (gaseous fuels) as applicable. (These five methods are incorporated by reference—see §60.17.)

(ii) GVC is the gross calorific value (kJ/kg, Btu/lb) of the fuel combusted determined by the ASTM test methods D2015–77 for solid fuels and D1826–77 for gaseous fuels as applicable. (These two methods are incorporated by reference—see §60.17.)

(iii) For affected facilities which fire both fossil fuels and nonfossil fuels, the F or F_c value shall be subject to the Administrator's approval.

(6) For affected facilities firing combinations of fossil fuels or fossil fuels and wood residue, the F or F_c factors determined by paragraphs (f)(4) or (f)(5) of this section shall be prorated in accordance with the applicable formula as follows:

$$F = \sum_{i=1}^{n} X_i F_i \text{ or } F_c = \sum_{i=1}^{n} X_i (F_c)_i$$

where:

X_i=the fraction of total heat input derived from each type of fuel (e.g. natural gas, bituminous coal, wood residue, etc.)

F_i or $(F_c)_i$=the applicable F or F_c factor for each fuel type determined in accordance with paragraphs (f)(4) and (f)(5) of this section.

n=the number of fuels being burned in combination.

(g) Excess emission and monitoring system performance reports shall be submitted to the Administrator semiannually for each six-month period in the calendar year. All semiannual reports shall be postmarked by the 30th day following the end of each six-month period. Each excess emission and MSP report shall include the information required in §60.7(c). Periods of excess emissions and monitoring systems (MS) downtime that shall be reported are defined as follows:

(1) *Opacity*. Excess emissions are defined as any six-minute period during which the average opacity of emissions exceeds 20 percent opacity, except that one six-minute average per hour of up to 27 percent opacity need not be reported.

(i) For sources subject to the opacity standard of §60.42(b)(1), excess emissions are defined as any six-minute period during which the average opacity of emissions exceeds 35 percent opacity, except that one six-minute average per hour of up to 42 percent opacity need not be reported.

(ii) For sources subject to the opacity standard of §60.42(b)(2), excess emissions are defined as any six-minute period during which the average opacity of emissions exceeds 32 percent opacity, except that one six-minute average per hour of up to 39 percent opacity need not be reported.

(2) *Sulfur dioxide.* Excess emissions for affected facilities are defined as:

(i) Any three-hour period during which the average emissions (arithmetic average of three contiguous one-hour periods) of sulfur dioxide as measured by a continuous monitoring system exceed the applicable standard under §60.43.

(3) *Nitrogen oxides.* Excess emissions for affected facilities using a continuous monitoring system for measuring nitrogen oxides are defined as any three-hour period during which the average emissions (arithmetic average of three contiguous one-hour periods) exceed the applicable standards under §60.44.

[40 FR 46256, Oct. 6, 1975]

EDITORIAL NOTE: For FEDERAL REGISTER citations affecting §60.45, see the List of CFR Sections Affected in the Finding Aids section of this volume.

§ 60.46 Test methods and procedures.

(a) In conducting the performance tests required in §60.8, the owner or operator shall use as reference methods and procedures the test methods in appendix A of this part or other methods and procedures as specified in this section, except as provided in §60.8(b). Acceptable alternative methods and procedures are given in paragraph (d) of this section.

(b) The owner or operator shall determine compliance with the particulate matter, SO_2, and NO_x standards in §§60.42, 60.43, and 60.44 as follows:

(1) The emission rate (E) of particulate matter, SO_2, or NO_x shall be computed for each run using the following equation:

$E = C\ F_d\ (20.9)/(20.9 - \%\ O_2)$

E = emission rate of pollutant, ng/J (1b/million Btu).

C = concentration of pollutant, ng/dscm (1b/dscf).

$\%O_2$ = oxygen concentration, percent dry basis.

F_d = factor as determined from Method 19.

(2) Method 5 shall be used to determine the particular matter concentration (C) at affected facilities without wet flue-gas-desulfurization (FGD) systems and Method 5B shall be used to

determine the particulate matter concentration (C) after FGD systems.

(i) The sampling time and sample volume for each run shall be at least 60 minutes and 0.85 dscm (30 dscf). The probe and filter holder heating systems in the sampling train may be set to provide a gas temperature no greater than 160±14 °C (320±25 °F).

(ii) The emission rate correction factor, integrated or grab sampling and analysis procedure of Method 3B shall be used to determine the O_2 concentration ($\%O_2$). The O_2 sample shall be obtained simultaneously with, and at the same traverse points as, the particulate sample. If the grab sampling procedure is used, the O_2 concentration for the run shall be the arithmetic mean of all the individual O_2 sample concentrations at each traverse point.

(iii) If the particulate run has more than 12 traverse points, the O_2 traverse points may be reduced to 12 provided that Method 1 is used to locate the 12 O_2 traverse points.

(3) Method 9 and the procedures in §60.11 shall be used to determine opacity.

(4) Method 6 shall be used to determine the SO_2 concentration.

(i) The sampling site shall be the same as that selected for the particulate sample. The sampling location in the duct shall be at the centroid of the cross section or at a point no closer to the walls than 1 m (3.28 ft). The sampling time and sample volume for each sample run shall be at least 20 minutes and 0.020 dscm (0.71 dscf). Two samples shall be taken during a 1-hour period, with each sample taken within a 30-minute interval.

(ii) The emission rate correction factor, integrated sampling and analysis procedure of Method 3B shall be used to determine the O_2 concentration ($\%O_2$). The O_2 sample shall be taken simultaneously with, and at the same point as, the SO_2 sample. The SO_2 emission rate shall be computed for each pair of SO_2 and O_2 samples. The SO_2 emission rate (E) for each run shall be the arithmetic mean of the results of the two pairs of samples.

(5) Method 7 shall be used to determine the NO_x concentration.

(i) The sampling site and location shall be the same as for the SO_2 sample. Each run shall consist of four grab samples, with each sample taken at about 15-minute intervals.

(ii) For each NO_x sample, the emission rate correction factor, grab sampling and analysis procedure of Method 3B shall be used to determine the O_2 concentration ($\%O_2$). The sample shall be taken simultaneously with, and at the same point as, the NO_x sample.

(iii) The NO_x emission rate shall be computed for each pair of NO_x and O_2 samples. The NO_x emission rate (E) for each run shall be the arithmetic mean of the results of the four pairs of samples.

(c) When combinations of fossil fuels or fossil fuel and wood residue are fired, the owner or operator (in order to compute the prorated standard as shown in §§60.43(b) and 60.44(b)) shall determine the percentage (w, x, y, or z) of the total heat input derived from each type of fuel as follows:

(1) The heat input rate of each fuel shall be determined by multiplying the gross calorific value of each fuel fired by the rate of each fuel burned.

(2) ASTM Methods D 2015–77 (solid fuels), D 240–76 (liquid fuels), or D 1826–77 (gaseous fuels) (incorporated by reference—see §60.17) shall be used to determine the gross calorific values of the fuels. The method used to determine the calorific value of wood residue must be approved by the Administrator.

(3) Suitable methods shall be used to determine the rate of each fuel burned during each test period, and a material balance over the steam generating system shall be used to confirm the rate.

(d) The owner or operator may use the following as alternatives to the reference methods and procedures in this section or in other sections as specified:

(1) The emission rate (E) of particulate matter, SO_2 and NO_x may be determined by using the F_c factor, provided that the following procedure is used:

(i) The emission rate (E) shall be computed using the following equation:

$$E = C\ F_c\ (100/\%CO_2)$$

where:

E=emission rate of pollutant, ng/J (lb/million Btu).

C=concentration of pollutant, ng/dscm (lb/dscf).

$\%CO_2$=carbon dioxide concentration, percent dry basis.

F_c=factor as determined in appropriate sections of Method 19.

(ii) If and only if the average F_c factor in Method 19 is used to calculate E and either E is from 0.97 to 1.00 of the emission standard or the relative accuracy of a continuous emission monitoring system is from 17 to 20 percent, then three runs of Method 3B shall be used to determine the O_2 and CO_2 concentration according to the procedures in paragraph (b) (2)(ii), (4)(ii), or (5)(ii) of this section. Then if F_o (average of three runs), as calculated from the equation in Method 3B, is more than ±3 percent than the average F_o value, as determined from the average values of F_d and F_c in Method 19, i.e., F_{oa}=0.209 (F_{da}/F_{ca}), then the following procedure shall be followed:

(A) When F_o is less than 0.97 F_{oa}, then E shall be increased by that proportion under 0.97 F_{oa}, e.g., if F_o is 0.95 F_{oa}, E shall be increased by 2 percent. This recalculated value shall be used to determine compliance with the emission standard.

(B) When F_o is less than 0.97 F_{oa} and when the average difference (d) between the continuous monitor minus the reference methods is negative, then E shall be increased by that proportion under 0.97 F_{oa}, e.g., if F_o is 0.95 F_{oa}, E shall be increased by 2 percent. This recalculated value shall be used to determine compliance with the relative accuracy specification.

(C) When F_o is greater than 1.03 F_{oa} and when the average difference d is positive, then E shall be decreased by that proportion over 1.03 F_{oa}, e.g., if F_o is 1.05 F_{oa}, E shall be decreased by 2 percent. This recalculated value shall be used to determine compliance with the relative accuracy specification.

(2) For Method 5 or 5B, Method 17 may be used at facilities with or without wet FGD systems if the stack gas temperature at the sampling location does not exceed an average temperature of 160 °C (320 °F). The procedures of sections 2.1 and 2.3 of Method 5B may be used with Method 17 only if it is used after wet FGD systems. Method 17 shall not be used after wet FGD systems if the effluent gas is saturated or laden with water droplets.

(3) Particulate matter and SO_2 may be determined simultaneously with the Method 5 train provided that the following changes are made:

(i) The filter and impinger apparatus in sections 2.1.5 and 2.1.6 of Method 8 is used in place of the condenser (section 2.1.7) of Method 5.

(ii) All applicable procedures in Method 8 for the determination of SO_2 (including moisture) are used:

(4) For Method 6, Method 6C may be used. Method 6A may also be used whenever Methods 6 and 3B data are specified to determine the SO_2 emission rate, under the conditions in paragraph (d)(1) of this section.

(5) For Method 7, Method 7A, 7C, 7D, or 7E may be used. If Method 7C, 7D, or 7E is used, the sampling time for each run shall be at least 1 hour and the integrated sampling approach shall be used to determine the O_2 concentration ($\%O_2$) for the emission rate correction factor.

(6) For Method 3, Method 3A or 3B may be used.

(7) For Method 3B, Method 3A may be used.

[54 FR 6662, Feb. 14, 1989; 54 FR 21344, May 17, 1989, as amended at 55 FR 5212, Feb. 14, 1990]

Subpart Da—Standards of Performance for Electric Utility Steam Generating Units for Which Construction is Commenced After September 18, 1978

SOURCE: 44 FR 33613, June 11, 1979, unless otherwise noted.

§ 60.40a Applicability and designation of affected facility.

(a) The affected facility to which this subpart applies is each electric utility steam generating unit:

(1) That is capable of combusting more than 73 megawatts (250 million Btu/hour) heat input of fossil fuel (either alone or in combination with any other fuel); and

(2) For which construction or modification is commenced after September 18, 1978.

(b) Unless and until subpart GG of this part extends the applicability of

subpart GG of this part to electric utility steam generators, this subpart applies to electric utility combined cycle gas turbines that are capable of combusting more than 73 megawatts (250 million Btu/hour) heat input of fossil fuel in the steam generator. Only emissions resulting from combustion of fuels in the steam generating unit are subject to this subpart. (The gas turbine emissions are subject to subpart GG of this part.)

(c) Any change to an existing fossil-fuel-fired steam generating unit to accommodate the use of combustible materials, other than fossil fuels, shall not bring that unit under the applicability of this subpart.

(d) Any change to an existing steam generating unit originally designed to fire gaseous or liquid fossil fuels, to accommodate the use of any other fuel (fossil or nonfossil) shall not bring that unit under the applicability of this subpart.

[44 FR 33613, June 11, 1979, as amended at 63 FR 49453, Sept. 16, 1998]

§ 60.41a Definitions.

As used in this subpart, all terms not defined herein shall have the meaning given them in the Act and in subpart A of this part.

Steam generating unit means any furnace, boiler, or other device used for combusting fuel for the purpose of producing steam (including fossil-fuel-fired steam generators associated with combined cycle gas turbines; nuclear steam generators are not included).

Electric utility steam generating unit means any steam electric generating unit that is constructed for the purpose of supplying more than one-third of its potential electric output capacity and more than 25 MW electrical output to any utility power distribution system for sale. Any steam supplied to a steam distribution system for the purpose of providing steam to a steam-electric generator that would produce electrical energy for sale is also considered in determining the electrical energy output capacity of the affected facility.

Fossil fuel means natural gas, petroleum, coal, and any form of solid, liquid, or gaseous fuel derived from such material for the purpose of creating useful heat.

Subbituminous coal means coal that is classified as subbituminous A, B, or C according to the American Society of Testing and Materials (ASTM) Standard Specification for Classification of Coals by Rank D388–77 (incorporated by reference—see §60.17).

Lignite means coal that is classified as lignite A or B according to the American Society of Testing and Materials' (ASTM) Standard Specification for Classification of Coals by Rank D388–77 (incorporated by reference—see §60.17).

Coal refuse means waste products of coal mining, physical coal cleaning, and coal preparation operations (e.g. culm, gob, etc.) containing coal, matrix material, clay, and other organic and inorganic material.

Potential combustion concentration means the theoretical emissions (ng/J, lb/million Btu heat input) that would result from combustion of a fuel in an uncleaned state without emission control systems) and:

(a) For particulate matter is:

(1) 3,000 ng/J (7.0 lb/million Btu) heat input for solid fuel; and

(2) 75 ng/J (0.17 lb/million Btu) heat input for liquid fuels.

(b) For sulfur dioxide is determined under §60.48a(b).

(c) For nitrogen oxides is:

(1) 290 ng/J (0.67 lb/million Btu) heat input for gaseous fuels;

(2) 310 ng/J (0.72 lb/million Btu) heat input for liquid fuels; and

(3) 990 ng/J (2.30 lb/million Btu) heat input for solid fuels.

Combined cycle gas turbine means a stationary turbine combustion system where heat from the turbine exhaust gases is recovered by a steam generating unit.

Interconnected means that two or more electric generating units are electrically tied together by a network of power transmission lines, and other power transmission equipment.

Electric utility company means the largest interconnected organization, business, or governmental entity that generates electric power for sale (e.g., a holding company with operating subsidiary companies).

Principal company means the electric utility company or companies which own the affected facility.

Neighboring company means any one of those electric utility companies with one or more electric power interconnections to the principal company and which have geographically adjoining service areas.

Net system capacity means the sum of the net electric generating capability (not necessarily equal to rated capacity) of all electric generating equipment owned by an electric utility company (including steam generating units, internal combustion engines, gas turbines, nuclear units, hydroelectric units, and all other electric generating equipment) plus firm contractual purchases that are interconnected to the affected facility that has the malfunctioning flue gas desulfurization system. The electric generating capability of equipment under multiple ownership is prorated based on ownership unless the proportional entitlement to electric output is otherwise established by contractual arrangement.

System load means the entire electric demand of an electric utility company's service area interconnected with the affected facility that has the malfunctioning flue gas desulfurization system plus firm contractual sales to other electric utility companies. Sales to other electric utility companies (e.g., emergency power) not on a firm contractual basis may also be included in the system load when no available system capacity exists in the electric utility company to which the power is supplied for sale.

System emergency reserves means an amount of electric generating capacity equivalent to the rated capacity of the single largest electric generating unit in the electric utility company (including steam generating units, internal combustion engines, gas turbines, nuclear units, hydroelectric units, and all other electric generating equipment) which is interconnected with the affected facility that has the malfunctioning flue gas desulfurization system. The electric generating capability of equipment under multiple ownership is prorated based on ownership unless the proportional entitlement to electric output is otherwise established by contractual arrangement.

Available system capacity means the capacity determined by subtracting the system load and the system emergency reserves from the net system capacity.

Spinning reserve means the sum of the unutilized net generating capability of all units of the electric utility company that are synchronized to the power distribution system and that are capable of immediately accepting additional load. The electric generating capability of equipment under multiple ownership is prorated based on ownership unless the proportional entitlement to electric output is otherwise established by contractual arrangement.

Available purchase power means the lesser of the following:

(a) The sum of available system capacity in all neighboring companies.

(b) The sum of the rated capacities of the power interconnection devices between the principal company and all neighboring companies, minus the sum of the electric power load on these interconnections.

(c) The rated capacity of the power transmission lines between the power interconnection devices and the electric generating units (the unit in the principal company that has the malfunctioning flue gas desulfurization system and the unit(s) in the neighboring company supplying replacement electrical power) less the electric power load on these transmission lines.

Spare flue gas desulfurization system module means a separate system of sulfur dioxide emission control equipment capable of treating an amount of flue gas equal to the total amount of flue gas generated by an affected facility when operated at maximum capacity divided by the total number of nonspare flue gas desulfurization modules in the system.

Emergency condition means that period of time when:

(a) The electric generation output of an affected facility with a malfunctioning flue gas desulfurization system cannot be reduced or electrical output must be increased because:

(1) All available system capacity in the principal company interconnected with the affected facility is being operated, and

(2) All available purchase power interconnected with the affected facility is being obtained, or

(b) The electric generation demand is being shifted as quickly as possible from an affected facility with a malfunctioning flue gas desulfurization system to one or more electrical generating units held in reserve by the principal company or by a neighboring company, or

(c) An affected facility with a malfunctioning flue gas desulfurization system becomes the only available unit to maintain a part or all of the principal company's system emergency reserves and the unit is operated in spinning reserve at the lowest practical electric generation load consistent with not causing significant physical damage to the unit. If the unit is operated at a higher load to meet load demand, an emergency condition would not exist unless the conditions under (a) of this definition apply.

Electric utility combined cycle gas turbine means any combined cycle gas turbine used for electric generation that is constructed for the purpose of supplying more than one-third of its potential electric output capacity and more than 25 MW electrical output to any utility power distribution system for sale. Any steam distribution system that is constructed for the purpose of providing steam to a steam electric generator that would produce electrical power for sale is also considered in determining the electrical energy output capacity of the affected facility.

Potential electrical output capacity is defined as 33 percent of the maximum design heat input capacity of the steam generating unit (e.g., a steam generating unit with a 100–MW (340 million Btu/hr) fossil-fuel heat input capacity would have a 33–MW potential electrical output capacity). For electric utility combined cycle gas turbines the potential electrical output capacity is determined on the basis of the fossil-fuel firing capacity of the steam generator exclusive of the heat input and electrical power contribution by the gas turbine.

Anthracite means coal that is classified as anthracite according to the American Society of Testing and Materials' (ASTM) Standard Specification for Classification of Coals by Rank D388–77 (incorporated by reference—see §60.17).

Solid-derived fuel means any solid, liquid, or gaseous fuel derived from solid fuel for the purpose of creating useful heat and includes, but is not limited to, solvent refined coal, liquified coal, and gasified coal.

24-hour period means the period of time between 12:01 a.m. and 12:00 midnight.

Resource recovery unit means a facility that combusts more than 75 percent non-fossil fuel on a quarterly (calendar) heat input basis.

Noncontinental area means the State of Hawaii, the Virgin Islands, Guam, American Samoa, the Commonwealth of Puerto Rico, or the Northern Mariana Islands.

Boiler operating day means a 24-hour period during which fossil fuel is combusted in a steam generating unit for the entire 24 hours.

Gross output means the gross useful work performed by the steam generated. For units generating only electricity, the gross useful work performed is the gross electrical output from the turbine/generator set. For cogeneration units, the gross useful work performed is the gross electrical output plus one half the useful thermal output (i.e., steam delivered to an industrial process).

[44 FR 33613, June 11, 1979, as amended at 48 FR 3737, Jan. 27, 1983; 63 FR 49453, Sept. 16, 1998]

§ 60.42a Standard for particulate matter.

(a) On and after the date on which the performance test required to be conducted under §60.8 is completed, no owner or operator subject to the provisions of this subpart shall cause to be discharged into the atmosphere from any affected facility any gases which contain particulate matter in excess of:

(1) 13 ng/J (0.03 lb/million Btu) heat input derived from the combustion of solid, liquid, or gaseous fuel;

(2) 1 percent of the potential combustion concentration (99 percent reduction) when combusting solid fuel; and

(3) 30 percent of potential combustion concentration (70 percent reduction) when combusting liquid fuel.

(b) On and after the date the particulate matter performance test required

to be conducted under § 60.8 is completed, no owner or operator subject to the provisions of this subpart shall cause to be discharged into the atmosphere from any affected facility any gases which exhibit greater than 20 percent opacity (6-minute average), except for one 6-minute period per hour of not more than 27 percent opacity.

§ 60.43a Standard for sulfur dioxide.

(a) On and after the date on which the initial performance test required to be conducted under § 60.8 is completed, no owner or operator subject to the provisions of this subpart shall cause to be discharged into the atmosphere from any affected facility which combusts solid fuel or solid-derived fuel, except as provided under paragraphs (c), (d), (f) or (h) of this section, any gases which contain sulfur dioxide in excess of:

(1) 520 ng/J (1.20 lb/million Btu) heat input and 10 percent of the potential combustion concentration (90 percent reduction), or

(2) 30 percent of the potential combustion concentration (70 percent reduction), when emissions are less than 260 ng/J (0.60 lb/million Btu) heat input.

(b) On and after the date on which the initial performance test required to be conducted under § 60.8 is completed, no owner or operator subject to the provisions of this subpart shall cause to be discharged into the atmosphere from any affected facility which combusts liquid or gaseous fuels (except for liquid or gaseous fuels derived from solid fuels and as provided under paragraphs (e) or (h) of this section), any gases which contain sulfur dioxide in excess of:

(1) 340 ng/J (0.80 lb/million Btu) heat input and 10 percent of the potential combustion concentration (90 percent reduction), or

(2) 100 percent of the potential combustion concentration (zero percent reduction) when emissions are less than 86 ng/J (0.20 lb/million Btu) heat input.

(c) On and after the date on which the initial performance test required to be conducted under § 60.8 is complete, no owner or operator subject to the provisions of this subpart shall cause to be discharged into the atmosphere from any affected facility which combusts solid solvent refined coal (SRC–I) any gases which contain sulfur dioxide in excess of 520 ng/J (1.20 lb/million Btu) heat input and 15 percent of the potential combustion concentration (85 percent reduction) except as provided under paragraph (f) of this section; compliance with the emission limitation is determined on a 30-day rolling average basis and compliance with the percent reduction requirement is determined on a 24-hour basis.

(d) Sulfur dioxide emissions are limited to 520 ng/J (1.20 lb/million Btu) heat input from any affected facility which:

(1) Combusts 100 percent anthracite,

(2) Is classified as a resource recovery facility, or

(3) Is located in a noncontinental area and combusts solid fuel or solid-derived fuel.

(e) Sulfur dioxide emissions are limited to 340 ng/J (0.80 lb/million Btu) heat input from any affected facility which is located in a noncontinental area and combusts liquid or gaseous fuels (excluding solid-derived fuels).

(f) The emission reduction requirements under this section do not apply to any affected facility that is operated under an SO_2 commercial demonstration permit issued by the Administrator in accordance with the provisions of § 60.45a.

(g) Compliance with the emission limitation and percent reduction requirements under this section are both determined on a 30-day rolling average basis except as provided under paragraph (c) of this section.

(h) When different fuels are combusted simultaneously, the applicable standard is determined by proration using the following formula:

(1) If emissions of sulfur dioxide to the atmosphere are greater than 260 ng/J (0.60 lb/million Btu) heat input

$E_s=(340x+520\ y)/100$ and
$\%P_s=10$

(2) If emissions of sulfur dioxide to the atmosphere are equal to or less than 260 ng/J (0.60 lb/million Btu) heat input:

$E_s=(340x+520\ y)/100$ and
$\%P_s=(10x+30\ y)/100$

where:

E_s is the prorated sulfur dioxide emission limit (ng/J heat input),

$\%P_s$ is the percentage of potential sulfur dioxide emission allowed.

x is the percentage of total heat input derived from the combustion of liquid or gaseous fuels (excluding solid-derived fuels)

y is the percentage of total heat input derived from the combustion of solid fuel (including solid-derived fuels)

[44 FR 33613, June 11, 1979, as amended at 54 FR 6663, Feb. 14, 1989; 54 FR 21344, May 17, 1989]

§ 60.44a Standard for nitrogen oxides.

(a) On and after the date on which the initial performance test required to be conducted under § 60.8 is completed, no owner or operator subject to the provisions of this subpart shall cause to be discharged into the atmosphere from any affected facility, except as provided under paragraphs (b) and (d) of this section, any gases which contain nitrogen oxides (expressed as NO_2) in excess of the following emission limits, based on a 30-day rolling average:

(1) *NO_x emission limits.*

Fuel type	Emission limit for heat input	
	ng/J	(lb/million Btu)
Gaseous fuels:		
Coal-derived fuels	210	0.50
All other fuels	86	0.20
Liquid fuels:		
Coal-derived fuels	210	0.50
Shale oil	210	0.50
All other fuels	130	0.30
Solid fuels:		
Coal-derived fuels	210	0.50
Any fuel containing more than 25%, by weight, coal refuse	[1]	[1]
Any fuel containing more than 25%, by weight, lignite if the lignite is mined in North Dakota, South Dakota, or Montana, and is combusted in a slag tap furnace[2]	340	0.80
Any fuel containing more than 25%, by weight, lignite not subject to the 340 ng/J heat input emission limit[2]..		
Subbituminous coal	210	0.50
Bituminous coal	260	0.60
Anthracite coal	260	0.60
All other fuels	260	0.60

[1] Exempt from NO_x standards and NO_x monitoring requirements.

[2] Any fuel containing less than 25%, by weight, lignite is not prorated but its percentage is added to the percentage of the predominant fuel.

(2) *NO_x reduction requirement.*

Fuel type	Percent reduction of potential combustion concentration
Gaseous fuels	25
Liquid fuels	30
Solid fuels	65

(b) The emission limitations under paragraph (a) of this section do not apply to any affected facility which is combusting coal-derived liquid fuel and is operating under a commercial demonstration permit issued by the Administrator in accordance with the provisions of § 60.45a.

(c) Except as provided under paragraph (d) of this section, when two or more fuels are combusted simultaneously, the applicable standard is determined by proration using the following formula:

$$E_n=[86\ w+130\times+210\ y+260\ z+340\ v]/100$$

where:

E_n is the applicable standard for nitrogen oxides when multiple fuels are combusted simultaneously (ng/J heat input);

w is the percentage of total heat input derived from the combustion of fuels subject to the 86 ng/J heat input standard;

x is the percentage of total heat input derived from the combustion of fuels subject to the 130 ng/J heat input standard;

y is the percentage of total heat input derived from the combustion of fuels subject to the 210 ng/J heat input standard;

z is the percentage of total heat input derived from the combustion of fuels subject to the 260 ng/J heat input standard; and

v is the percentage of total heat input delivered from the combustion of fuels subject to the 340 ng/J heat input standard.

(d)(1) On and after the date on which the initial performance test required to be conducted under § 60.8 is completed, no new source owner or operator subject to the provisions of this subpart shall cause to be discharged into the atmosphere from any affected facility for which construction commenced after July 9, 1997 any gases which contain nitrogen oxides (expressed as NO_2) in excess of 200 nanograms per joule 1.6 pounds per megawatt-hour) gross energy output, based on a 30-day rolling average.

(2) On and after the date on which the initial performance test required to be conducted under § 60.8 is completed, no existing source owner or operator

subject to the provisions of this subpart shall cause to be discharged into the atmosphere from any affected facility for which modification or reconstruction commenced after July 9, 1997 any gases which contain nitrogen oxides (expressed as NO_2) in excess of 65 ng/J_1 (0.15 pounds per million Btu) heat input, based on a 30-day rolling average.

[44 FR 33613, June 11, 1979, as amended at 54 FR 6664, Feb. 14, 1989; 63 FR 49453, Sept. 16, 1998]

§ 60.45a Commercial demonstration permit.

(a) An owner or operator of an affected facility proposing to demonstrate an emerging technology may apply to the Administrator for a commercial demonstration permit. The Administrator will issue a commercial demonstration permit in accordance with paragraph (e) of this section. Commercial demonstration permits may be issued only by the Administrator, and this authority will not be delegated.

(b) An owner or operator of an affected facility that combusts solid solvent refined coal (SRC–I) and who is issued a commercial demonstration permit by the Administrator is not subject to the SO_2 emission reduction requirements under §60.43a(c) but must, as a minimum, reduce SO_2 emissions to 20 percent of the potential combustion concentration (80 percent reduction) for each 24-hour period of steam generator operation and to less than 520 ng/J (1.20 lb/million Btu) heat input on a 30-day rolling average basis.

(c) An owner or operator of a fluidized bed combustion electric utility steam generator (atmospheric or pressurized) who is issued a commercial demonstration permit by the Administrator is not subject to the SO_2 emission reduction requirements under §60.43a(a) but must, as a minimum, reduce SO_2 emissions to 15 percent of the potential combustion concentration (85 percent reduction) on a 30-day rolling average basis and to less than 520 ng/J (1.20 lb/million Btu) heat input on a 30-day rolling average basis.

(d) The owner or operator of an affected facility that combusts coal-derived liquid fuel and who is issued a commercial demonstration permit by the Administrator is not subject to the applicable NO_x emission limitation and percent reduction under §60.44a(a) but must, as a minimum, reduce emissions to less than 300 ng/J (0.70 lb/million Btu) heat input on a 30-day rolling average basis.

(e) Commercial demonstration permits may not exceed the following equivalent MW electrical generation capacity for any one technology category, and the total equivalent MW electrical generation capacity for all commercial demonstration plants may not exceed 15,000 MW.

Technology	Pollutant	Equivalent electrical capacity (MW electrical output)
Solid solvent refined coal (SRC I)	SO_2	6,000–10,000
Fluidized bed combustion (atmospheric)	SO_2	400–3,000
Fluidized bed combustion (pressurized)	SO_2	400–1,200
Coal liquification	NO_x	750–10,000
Total allowable for all technologies	.....	15,000

§ 60.46a Compliance provisions.

(a) Compliance with the particulate matter emission limitation under §60.42a(a)(1) constitutes compliance with the percent reduction requirements for particulate matter under §60.42a(a)(2) and (3).

(b) Compliance with the nitrogen oxides emission limitation under §60.44a(a) constitutes compliance with the percent reduction requirements under §60.44a(a)(2).

(c) The particulate matter emission standards under §60.42a and the nitrogen oxides emission standards under §60.44a apply at all times except during periods of startup, shutdown, or malfunction. The sulfur dioxide emission standards under §60.43a apply at all times except during periods of startup, shutdown, or when both emergency conditions exist and the procedures under paragraph (d) of this section are implemented.

(d) During emergency conditions in the principal company, an affected facility with a malfunctioning flue gas

desulfurization system may be operated if sulfur dioxide emissions are minimized by:

(1) Operating all operable flue gas desulfurization system modules, and bringing back into operation any malfunctioned module as soon as repairs are completed,

(2) Bypassing flue gases around only those flue gas desulfurization system modules that have been taken out of operation because they were incapable of any sulfur dioxide emission reduction or which would have suffered significant physical damage if they had remained in operation, and

(3) Designing, constructing, and operating a spare flue gas desulfurization system module for an affected facility larger than 365 MW (1,250 million Btu/hr) heat input (approximately 125 MW electrical output capacity). The Administrator may at his discretion require the owner or operator within 60 days of notification to demonstrate spare module capability. To demonstrate this capability, the owner or operator must demonstrate compliance with the appropriate requirements under paragraph (a), (b), (d), (e), and (h) under §60.43a for any period of operation lasting from 24 hours to 30 days when:

(i) Any one flue gas desulfurization module is not operated,

(ii) The affected facility is operating at the maximum heat input rate,

(iii) The fuel fired during the 24-hour to 30-day period is representative of the type and average sulfur content of fuel used over a typical 30-day period, and

(iv) The owner or operator has given the Administrator at least 30 days notice of the date and period of time over which the demonstration will be performed.

(e) After the initial performance test required under §60.8, compliance with the sulfur dioxide emission limitations and percentage reduction requirements under §60.43a and the nitrogen oxides emission limitations under §60.44a is based on the average emission rate for 30 successive boiler operating days. A separate performance test is completed at the end of each boiler operating day after the initial performance test, and a new 30 day average emission rate for both sulfur dioxide and nitrogen oxides and a new percent reduction for sulfur dioxide are calculated to show compliance with the standards.

(f) For the initial performance test required under §60.8, compliance with the sulfur dioxide emission limitations and percent reduction requirements under §60.43a and the nitrogen oxides emission limitation under §60.44a is based on the average emission rates for sulfur dioxide, nitrogen oxides, and percent reduction for sulfur dioxide for the first 30 successive boiler operating days. The initial performance test is the only test in which at least 30 days prior notice is required unless otherwise specified by the Administrator. The initial performance test is to be scheduled so that the first boiler operating day of the 30 successive boiler operating days is completed within 60 days after achieving the maximum production rate at which the affected facility will be operated, but not later than 180 days after initial startup of the facility.

(g) Compliance is determined by calculating the arithmetic average of all hourly emission rates for SO_2 and NO_x for the 30 successive boiler operating days, except for data obtained during startup, shutdown, malfunction (NO_x only), or emergency conditions (SO_2 only). Compliance with the percentage reduction requirement for SO_2 is determined based on the average inlet and average outlet SO_2 emission rates for the 30 successive boiler operating days.

(h) If an owner or operator has not obtained the minimum quantity of emission data as required under §60.47a of this subpart, compliance of the affected facility with the emission requirements under §§60.43a and 60.44a of this subpart for the day on which the 30-day period ends may be determined by the Administrator by following the applicable procedures in section 7 of Method 19.

(i) *Compliance provisions for sources subject to §60.44a(d).* (1) The owner or operator of an affected facility subject to §60.44a(d)(1) (new source constructed after July 7, 1997) shall calculate NO_X emissions by multiplying the average hourly NO_X output concentration measured according to the provisions of §60.47a(c) by the average hourly flow

rate measured according to the provisions of § 60.47a(1) and divided by the average hourly gross heat rate measured according to the provisions of § 60.47a(k).

(2) The owner or operator of an affected facility subject to § 60.44a(d)(2) (modified or reconstructed source after July 7, 1997) shall demonstrate compliance according to the provisions of paragraph (g) of this section.

[44 FR 33613, June 11, 1979, as amended at 54 FR 6664, Feb. 14, 1989; 63 FR 49454, Sept. 16, 1998]

§ 60.47a Emission monitoring.

(a) The owner or operator of an affected facility shall install, calibrate, maintain, and operate a continuous monitoring system, and record the output of the system, for measuring the opacity of emissions discharged to the atmosphere, except where gaseous fuel is the only fuel combusted. If opacity interference due to water droplets exists in the stack (for example, from the use of an FGD system), the opacity is monitored upstream of the interference (at the inlet to the FGD system). If opacity interference is experienced at all locations (both at the inlet and outlet of the sulfur dioxide control system), alternate parameters indicative of the particulate matter control system's performance are monitored (subject to the approval of the Administrator).

(b) The owner or operator of an affected facility shall install, calibrate, maintain, and operate a continuous monitoring system, and record the output of the system, for measuring sulfur dioxide emissions, except where natural gas is the only fuel combusted, as follows:

(1) Sulfur dioxide emissions are monitored at both the inlet and outlet of the sulfur dioxide control device.

(2) For a facility which qualifies under the provisions of § 60.43a(d), sulfur dioxide emissions are only monitored as discharged to the atmosphere.

(3) An ''as fired'' fuel monitoring system (upstream of coal pulverizers) meeting the requirements of Method 19 (appendix A) may be used to determine potential sulfur dioxide emissions in place of a continuous sulfur dioxide emission monitor at the inlet to the sulfur dioxide control device as required under paragraph (b)(1) of this section.

(c)(1) The owner or operator of an affected facility shall install, calibrate, maintain, and operate a continuous monitoring system, and record the output of the system, for measuring nitrogen oxides emissions discharged to the atmosphere; or

(2) If the owner or operator has installed a nitrogen oxides emission rate continuous emission monitoring system (CEMS) to meet the requirements of part 75 of this chapter and is continuing to meet the ongoing requirements of part 75 of this chapter, that CEMS may be used to meet the requirements of this section, except that the owner or operator shall also meet the requirements of § 60.49a. Data reported to meet the requirements of § 60.49a shall not include data substituted using the missing data procedures in subpart D of part 75 of this chapter, nor shall the data have been bias adjusted according to the procedures of part 75 of this chapter.

(d) The owner or operator of an affected facility shall install, calibrate, maintain, and operate a continuous monitoring system, and record the output of the system, for measuring the oxygen or carbon dioxide content of the flue gases at each location where sulfur dioxide or nitrogen oxides emissions are monitored.

(e) The continuous monitoring systems under paragraphs (b), (c), and (d) of this section are operated and data recorded during all periods of operation of the affected facility including periods of startup, shutdown, malfunction or emergency conditions, except for continuous monitoring system breakdowns, repairs, calibration checks, and zero and span adjustments.

(f) The owner or operator shall obtain emission data for at least 18 hours in at least 22 out of 30 successive boiler operating days. If this minimum data requirement cannot be met with a continuous monitoring system, the owner or operator shall supplement emission data with other monitoring systems approved by the Administrator or the reference methods and procedures as described in paragraph (h) of this section.

(g) The 1-hour averages required under paragraph § 60.13(h) are expressed in ng/J (lbs/million Btu) heat input and used to calculate the average emission rates under § 60.46a. The 1-hour averages are calculated using the data points required under § 60.13(b). At least two data points must be used to calculate the 1-hour averages.

(h) When it becomes necessary to supplement continuous monitoring system data to meet the minimum data requirements in paragraph (f) of this section, the owner or operator shall use the reference methods and procedures as specified in this paragraph. Acceptable alternative methods and procedures are given in paragraph (j) of this section.

(1) Method 6 shall be used to determine the SO_2 concentration at the same location as the SO_2 monitor. Samples shall be taken at 60-minute intervals. The sampling time and sample volume for each sample shall be at least 20 minutes and 0.020 dscm (0.71 dscf). Each sample represents a 1-hour average.

(2) Method 7 shall be used to determine the NO_x concentration at the same location as the NO_x monitor. Samples shall be taken at 30-minute intervals. The arithmetic average of two consecutive samples represents a 1-hour average.

(3) The emission rate correction factor, integrated bag sampling and analysis procedure of Method 3B shall be used to determine the O_2 or CO_2 concentration at the same location as the O_2 or CO_2 monitor. Samples shall be taken for at least 309 minutes in each hour. Each sample represents a 1-hour average.

(4) The procedures in Method 19 shall be used to compute each 1-hour average concentration in ng/J (1b/million Btu) heat input.

(i) The owner or operator shall use methods and procedures in this paragraph to conduct monitoring system performance evaluations under § 60.13(c) and calibration checks under § 60.13(d). Acceptable alternative methods and procedures are given in paragraph (j) of this section.

(1) Methods 6, 7, and 3B, as applicable, shall be used to determine O_2, SO_2, and NO_x concentrations.

(2) SO_2 or NO_x (NO), as applicable, shall be used for preparing the calibration gas mixtures (in N_2, as applicable) under Performance Specification 2 of appendix B of this part.

(3) For affected facilities burning only fossil fuel, the span value for a continuous monitoring system for measuring opacity is between 60 and 80 percent and for a continuous monitoring system measuring nitrogen oxides is determined as follows:

Fossil fuel	Span value for nitrogen oxides (ppm)
Gas	500
Liquid	500
Solid	1,000
Combination	500 (x+y)+1,000z

where:
x is the fraction of total heat input derived from gaseous fossil fuel,
y is the fraction of total heat input derived from liquid fossil fuel, and
z is the fraction of total heat input derived from solid fossil fuel.

(4) All span values computed under paragraph (b)(3) of this section for burning combinations of fossil fuels are rounded to the nearest 500 ppm.

(5) For affected facilities burning fossil fuel, alone or in combination with non-fossil fuel, the span value of the sulfur dioxide continuous monitoring system at the inlet to the sulfur dioxide control device is 125 percent of the maximum estimated hourly potential emissions of the fuel fired, and the outlet of the sulfur dioxide control device is 50 percent of maximum estimated hourly potential emissions of the fuel fired.

(j) The owner or operator may use the following as alternatives to the reference methods and procedures specified in this section:

(1) For Method 6, Method 6A or 6B (whenever Methods 6 and 3 or 3B data are used) or 6C may be used. Each Method 6B sample obtained over 24 hours represents 24 1-hour averages. If Method 6A or 6B is used under paragraph (i) of this section, the conditions under § 60.46(d)(1) apply; these conditions do not apply under paragraph (h) of this section.

(2) For Method 7, Method 7A, 7C, 7D, or 7E may be used. If Method 7C, 7D, or 7E is used, the sampling time for each run shall be 1 hour.

(3) For Method 3, Method 3A or 3B may be used if the sampling time is 1 hour.

(4) For Method 3B, Method 3A may be used.

(k) The procedures specified in paragraphs (k)(1) through (k)(3) of this section shall be used to determine gross heat rate for sources demonstrating compliance with the output-based standard under § 60.44a(d)(1).

(1) The owner or operator of an affected facility with electricity generation shall install, calibrate, maintain, and operate a wattmeter; measure gross electrical output in megawatt-hour on a continuous basis; and record the output of the monitor.

(2) The owner or operator of an affected facility with process steam generation shall install, calibrate, maintain, and operate meters for steam flow, temperature, and pressure; measure gross process steam output in joules per hour (or Btu per hour) on a continuous basis; and record the output of the monitor.

(3) For affected facilities generating process steam in combination with electrical generation, the gross energy output is determined from the gross electrical output measured in accordance with paragraph (k)(1) of this section plus 50 percent of the gross thermal output of the process steam measured in accordance with paragraph (k)(2) of this section.

(l) The owner or operator of an affected facility demonstrating compliance with the output-based standard under § 60.44a(d)(1) shall, install, certify, operate, and maintain a continuous flow monitoring system, and record the output of the system, for measuring the flow of exhaust gases discharged to the atmosphere.

[44 FR 33613, June 11, 1979, as amended at 54 FR 6664, Feb. 14, 1989; 55 FR 5212, Feb. 14, 1990; 55 FR 18876, May 7, 1990; 63 FR 49454, Sept. 16, 1998]

§ 60.48a Compliance determination procedures and methods.

(a) In conducting the performance tests required in § 60.8, the owner or operator shall use as reference methods and procedures the methods in appendix A of this part or the methods and procedures as specified in this section, except as provided in § 60.8(b). Section 60.8(f) does not apply to this section for SO_2 and NO_x. Acceptable alternative methods are given in paragraph (e) of this section.

(b) The owner or operator shall determine compliance with the particulate matter standards in § 60.42a as follows:

(1) The dry basis F factor (O_2) procedures in Method 19 shall be used to compute the emission rate of particulate matter.

(2) For the particular matter concentration, Method 5 shall be used at affected facilities without wet FGD systems and Method 5B shall be used after wet FGD systems.

(i) The sampling time and sample volume for each run shall be at least 120 minutes and 1.70 dscm (60 dscf). The probe and filter holder heating system in the sampling train may be set to provide an average gas temperature of no greater than 160±14 ° C (320±25° F).

(ii) For each particulate run, the emission rate correction factor, integrated or grab sampling and analysis procedures of Method 3B shall be used to determine the O_2 concentration. The O_2 sample shall be obtained simultaneously with, and at the same traverse points as, the particulate run. If the particulate run has more than 12 traverse points, the O_2 traverse points may be reduced to 12 provided that Method 1 is used to locate the 12 O_2 traverse points. If the grab sampling procedure is used, the O_2 concentration for the run shall be the arithmetic mean of all the individual O_2 concentrations at each traverse point.

(3) Method 9 and the procedures in § 60.11 shall be used to determine opacity.

(c) The owner or operator shall determine compliance with the SO_2 standards in § 60.43a as follows:

(1) The percent of potential SO_2 emissions ($\%P_s$) to the atmosphere shall be computed using the following equation:

$$\%P_s=[(100—\%R_f)\ (100—\%R_g)]/100$$

where:

$\%P_s$=percent of potential SO_2 emissions, percent.

$\%R_f$=percent reduction from fuel pretreatment, percent.

$\%R_g$=percent reduction by SO_2 control system, percent.

(2) The procedures in Method 19 may be used to determine percent reduction ($\%R_f$) of sulfur by such processes as fuel pretreatment (physical coal cleaning, hydrodesulfurization of fuel oil, etc.), coal pulverizers, and bottom and flyash interactions. This determination is optional.

(3) The procedures in Method 19 shall be used to determine the percent SO_2 reduction ($\%R_g$ of any SO_2 control system. Alternatively, a combination of an ''as fired'' fuel monitor and emission rates measured after the control system, following the procedures in Method 19, may be used if the percent reduction is calculated using the average emission rate from the SO_2 control device and the average SO_2 input rate from the ''as fired'' fuel analysis for 30 successive boiler operating days.

(4) The appropriate procedures in Method 19 shall be used to determine the emission rate.

(5) The continuous monitoring system in §60.47a (b) and (d) shall be used to determine the concentrations of SO_2 and CO_2 or O_2.

(d) The owner or operator shall determine compliance with the NO_x standard in §60.44a as follows:

(1) The appropriate procedures in Method 19 shall be used to determine the emission rate of NO_x.

(2) The continous monitoring system in §60.47a (c) and (d) shall be used to determine the concentrations of NO_x and CO_2 or O_2.

(e) The owner or operator may use the following as alternatives to the reference methods and procedures specified in this section:

(1) For Method 5 or 5B, Method 17 may be used at facilities with or without wet FGD systems if the stack temperature at the sampling location does not exceed an average temperature of 160 °C (320 °F). The procedures of §§2.1 and 2.3 of Method 5B may be used in Method 17 only if it is used after wet FGD systems. Method 17 shall not be used after wet FGD systems if the effluent is saturated or laden with water droplets.

(2) The F_c factor (CO_2) procedures in Method 19 may be used to compute the emission rate of particulate matter under the stipulations of §60.46(d)(1). The CO_2 shall be determined in the same manner as the O_2 concentration.

(f) Electric utility combined cycle gas turbines are performance tested for particulate matter, sulfur dioxide, and nitrogen oxides using the procedures of Method 19 (appendix A). The sulfur dioxide and nitrogen oxides emission rates from the gas turbine used in Method 19 (appendix A) calculations are determined when the gas turbine is performance tested under subpart GG. The potential uncontrolled particulate matter emission rate from a gas turbine is defined as 17 ng/J (0.04 lb/million Btu) heat input.

[44 FR 33613, June 11, 1979, as amended at 54 FR 6664, Feb. 14, 1989; 55 FR 5212, Feb. 14, 1990]

§ 60.49a Reporting requirements.

(a) For sulfur dioxide, nitrogen oxides, and particulate matter emissions, the performance test data from the initial performance test and from the performance evaluation of the continuous monitors (including the transmissometer) are submitted to the Administrator.

(b) For sulfur dioxide and nitrogen oxides the following information is reported to the Administrator for each 24-hour period.

(1) Calendar date.

(2) The average sulfur dioxide and nitrogen oxide emission rates (ng/J or lb/million Btu) for each 30 successive boiler operating days, ending with the last 30-day period in the quarter; reasons for non-compliance with the emission standards; and, description of corrective actions taken.

(3) Percent reduction of the potential combustion concentration of sulfur dioxide for each 30 successive boiler operating days, ending with the last 30-day period in the quarter; reasons for noncompliance with the standard; and, description of corrective actions taken.

(4) Identification of the boiler operating days for which pollutant or dilutent data have not been obtained by an approved method for at least 18 hours of operation of the facility; justification for not obtaining sufficient data; and description of corrective actions taken.

(5) Identification of the times when emissions data have been excluded

from the calculation of average emission rates because of startup, shutdown, malfunction (NO_x only), emergency conditions (SO_2 only), or other reasons, and justification for excluding data for reasons other than startup, shutdown, malfunction, or emergency conditions.

(6) Identification of ''F'' factor used for calculations, method of determination, and type of fuel combusted.

(7) Identification of times when hourly averages have been obtained based on manual sampling methods.

(8) Identification of the times when the pollutant concentration exceeded full span of the continuous monitoring system.

(9) Description of any modifications to the continuous monitoring system which could affect the ability of the continuous monitoring system to comply with Performance Specifications 2 or 3.

(c) If the minimum quantity of emission data as required by §60.47a is not obtained for any 30 successive boiler operating days, the following information obtained under the requirements of §60.46a(h) is reported to the Administrator for that 30-day period:

(1) The number of hourly averages available for outlet emission rates (n_o) and inlet emission rates (n_i) as applicable.

(2) The standard deviation of hourly averages for outlet emission rates (s_o) and inlet emission rates (s_i) as applicable.

(3) The lower confidence limit for the mean outlet emission rate (E_o*) and the upper confidence limit for the mean inlet emission rate (E_i*) as applicable.

(4) The applicable potential combustion concentration.

(5) The ratio of the upper confidence limit for the mean outlet emission rate (E_o*) and the allowable emission rate (E_{std}) as applicable.

(d) If any standards under §60.43a are exceeded during emergency conditions because of control system malfunction, the owner or operator of the affected facility shall submit a signed statement:

(1) Indicating if emergency conditions existed and requirements under §60.46a(d) were met during each period, and

(2) Listing the following information:

(i) Time periods the emergency condition existed;

(ii) Electrical output and demand on the owner or operator's electric utility system and the affected facility;

(iii) Amount of power purchased from interconnected neighboring utility companies during the emergency period;

(iv) Percent reduction in emissions achieved;

(v) Atmospheric emission rate (ng/J) of the pollutant discharged; and

(vi) Actions taken to correct control system malfunction.

(e) If fuel pretreatment credit toward the sulfur dioxide emission standard under §60.43a is claimed, the owner or operator of the affected facility shall submit a signed statement:

(1) Indicating what percentage cleaning credit was taken for the calendar quarter, and whether the credit was determined in accordance with the provisions of §60.48a and Method 19 (appendix A); and

(2) Listing the quantity, heat content, and date each pretreated fuel shipment was received during the previous quarter; the name and location of the fuel pretreatment facility; and the total quantity and total heat content of all fuels received at the affected facility during the previous quarter.

(f) For any periods for which opacity, sulfur dioxide or nitrogen oxides emissions data are not available, the owner or operator of the affected facility shall submit a signed statement indicating if any changes were made in operation of the emission control system during the period of data unavailability. Operations of the control system and affected facility during periods of data unavailability are to be compared with operation of the control system and affected facility before and following the period of data unavailability.

(g) The owner or operator of the affected facility shall submit a signed statement indicating whether:

(1) The required continuous monitoring system calibration, span, and drift checks or other periodic audits

have or have not been performed as specified.

(2) The data used to show compliance was or was not obtained in accordance with approved methods and procedures of this part and is representative of plant performance.

(3) The minimum data requirements have or have not been met; or, the minimum data requirements have not been met for errors that were unavoidable.

(4) Compliance with the standards has or has not been achieved during the reporting period.

(h) For the purposes of the reports required under § 60.7, periods of excess emissions are defined as all 6-minute periods during which the average opacity exceeds the applicable opacity standards under § 60.42a(b). Opacity levels in excess of the applicable opacity standard and the date of such excesses are to be submitted to the Administrator each calendar quarter.

(i) The owner or operator of an affected facility shall submit the written reports required under this section and subpart A to the Administrator semiannually for each six-month period. All semiannual reports shall be postmarked by the 30th day following the end of each six-month period.

(j) The owner or operator of an affected facility may submit electronic quarterly reports for SO_2 and/or NO_x and/or opacity in lieu of submitting the written reports required under paragraphs (b) and (h) of this section. The format of each quarterly electronic report shall be coordinated with the permitting authority. The electronic report(s) shall be submitted no later than 30 days after the end of the calendar quarter and shall be accompanied by a certification statement from the owner or operator, indicating whether compliance with the applicable emission standards and minimum data requirements of this subpart was achieved during the reporting period. Before submitting reports in the electronic format, the owner or operator shall coordinate with the permitting authority to obtain their agreement to submit reports in this alternative format.

[44 FR 33613, June 11, 1979, as amended at 63 FR 49454, Sept. 16, 1998; 64 FR 7464, Feb. 12, 1999]

Subpart Db—Standards of Performance for Industrial-Commercial-Institutional Steam Generating Units

§ 60.40b Applicability and delegation of authority.

(a) The affected facility to which this subpart applies is each steam generating unit that commences construction, modification, or reconstruction after June 19, 1984, and that has a heat input capacity from fuels combusted in the steam generating unit of greater than 29 MW (100 million Btu/hour).

(b) Any affected facility meeting the applicability requirements under paragraph (a) of this section and commencing construction, modification, or reconstruction after June 19, 1984, but on or before June 19, 1986, is subject to the following standards:

(1) Coal-fired affected facilities having a heat input capacity between 29 and 73 MW (100 and 250 million Btu/hour), inclusive, are subject to the particulate matter and nitrogen oxides standards under this subpart.

(2) Coal-fired affected facilities having a heat input capacity greater than 73 MW (250 million Btu/hour) and meeting the applicability requirements under subpart D (Standards of performance for fossil-fuel-fired steam generators; § 60.40) are subject to the particulate matter and nitrogen oxides standards under this subpart and to the sulfur dioxide standards under subpart D (§ 60.43).

(3) Oil-fired affected facilities having a heat input capacity between 29 and 73 MW (100 and 250 million Btu/hour), inclusive, are subject to the nitrogen oxides standards under this subpart.

(4) Oil-fired affected facilities having a heat input capacity greater than 73 MW (250 million Btu/hour) and meeting the applicability requirements under subpart D (Standards of performance for fossil-fuel-fired steam generators; § 60.40) are also subject to the nitrogen oxides standards under this subpart and the particulate matter and sulfur dioxide standards under subpart D (§ 60.42 and § 60.43).

(c) Affected facilities which also meet the applicability requirements under subpart J (Standards of performance for petroleum refineries; § 60.104)

are subject to the particulate matter and nitrogen oxides standards under this subpart and the sulfur dioxide standards under subpart J (§60.104).

(d) Affected facilities which also meet the applicability requirements under subpart E (Standards of performance for incinerators; §60.50) are subject to the nitrogen oxides and particulate matter standards under this subpart.

(e) Steam generating units meeting the applicability requirements under subpart Da (Standards of performance for electric utility steam generating units; §60.40a) are not subject to this subpart.

(f) Any change to an existing steam generating unit for the sole purpose of combusting gases containing TRS as defined under §60.281 is not considered a modification under §60.14 and the steam generating unit is not subject to this subpart.

(g) In delegating implementation and enforcement authority to a State under section 111(c) of the Act, the following authorities shall be retained by the Administrator and not transferred to a State.

(1) Section 60.44b(f).

(2) Section 60.44b(g).

(3) Section 60.49b(a)(4).

(h) Affected facilities which meet the applicability requirements under subpart Eb (Standards of performance for municipal waste combustors; §60.50b) are not subject to this subpart.

(i) Unless and until subpart GG of this part is revised to extend the applicability of subpart GG of this part to steam generator units subject to this subpart, this subpart will continue to apply to combined cycle gas turbines that are capable of combusting more than 29 MW (100 million Btu/hour) heat input of fossil fuel in the steam generator. Only emissions resulting from combustion of fuels in the steam generating unit are subject to this subpart. (The gas turbine emissions are subject to subpart GG of this part.)

[52 FR 47842, Dec. 16, 1987, as amended at 63 FR 49454, Sept. 16, 1998]

§60.41b Definitions.

As used in this subpart, all terms not defined herein shall have the meaning given them in the Act and in subpart A of this part.

Annual capacity factor means the ratio between the actual heat input to a steam generating unit from the fuels listed in §60.42b(a), §60.43b(a), or §60.44b(a), as applicable, during a calendar year and the potential heat input to the steam generating unit had it been operated for 8,760 hours during a calendar year at the maximum steady state design heat input capacity. In the case of steam generating units that are rented or leased, the actual heat input shall be determined based on the combined heat input from all operations of the affected facility in a calendar year.

Byproduct/waste means any liquid or gaseous substance produced at chemical manufacturing plants or petroleum refineries (except natural gas, distillate oil, or residual oil) and combusted in a steam generating unit for heat recovery or for disposal. Gaseous substances with carbon dioxide levels greater than 50 percent or carbon monoxide levels greater than 10 percent are not byproduct/waste for the purposes of this subpart.

Chemical manufacturing plants means industrial plants which are classified by the Department of Commerce under Standard Industrial Classification (SIC) Code 28.

Coal means all solid fuels classified as anthracite, bituminous, subbituminous, or lignite by the American Society of Testing and Materials in ASTM D388–77, Standard Specification for Classification of Coals by Rank (IBR—see §60.17), coal refuse, and petroleum coke. Coal-derived synthetic fuels, including but not limited to solvent refined coal, gasified coal, coal-oil mixtures, and coal-water mixtures, are also included in this definition for the purposes of this subpart.

Coal refuse means any byproduct of coal mining or coal cleaning operations with an ash content greater than 50 percent, by weight, and a heating value less than 13,900 kJ/kg (6,000 Btu/lb) on a dry basis.

Combined cycle system means a system in which a separate source, such as a gas turbine, internal combustion engine, kiln, etc., provides exhaust gas to a heat recovery steam generating unit.

Conventional technology means wet flue gas desulfurization (FGD) technology, dry FGD technology, atmospheric fluidized bed combustion technology, and oil hydrodesulfurization technology.

Distillate oil means fuel oils that contain 0.05 weight percent nitrogen or less and comply with the specifications for fuel oil numbers 1 and 2, as defined by the American Society of Testing and Materials in ASTM D396–78, Standard Specifications for Fuel Oils (incorporated by reference—see § 60.17).

Dry flue gas desulfurization technology means a sulfur dioxide control system that is located downstream of the steam generating unit and removes sulfur oxides from the combustion gases of the steam generating unit by contacting the combustion gases with an alkaline slurry or solution and forming a dry powder material. This definition includes devices where the dry powder material is subsequently converted to another form. Alkaline slurries or solutions used in dry flue gas desulfurization technology include but are not limited to lime and sodium.

Duct burner means a device that combusts fuel and that is placed in the exhaust duct from another source, such as a stationary gas turbine, internal combustion engine, kiln, etc., to allow the firing of additional fuel to heat the exhaust gases before the exhaust gases enter a heat recovery steam generating unit.

Emerging technology means any sulfur dioxide control system that is not defined as a conventional technology under this section, and for which the owner or operator of the facility has applied to the Administrator and received approval to operate as an emerging technology under § 60.49b(a)(4).

Federally enforceable means all limitations and conditions that are enforceable by the Administrator, including the requirements of 40 CFR parts 60 and 61, requirements within any applicable State Implementation Plan, and any permit requirements established under 40 CFR 52.21 or under 40 CFR 51.18 and 40 CFR 51.24.

Fluidized bed combustion technology means combustion of fuel in a bed or series of beds (including but not limited to bubbling bed units and circulating bed units) of limestone aggregate (or other sorbent materials) in which these materials are forced upward by the flow of combustion air and the gaseous products of combustion.

Fuel pretreatment means a process that removes a portion of the sulfur in a fuel before combustion of the fuel in a steam generating unit.

Full capacity means operation of the steam generating unit at 90 percent or more of the maximum steady-state design heat input capacity.

Heat input means heat derived from combustion of fuel in a steam generating unit and does not include the heat input from preheated combustion air, recirculated flue gases, or exhaust gases from other sources, such as gas turbines, internal combustion engines, kilns, etc.

Heat release rate means the steam generating unit design heat input capacity (in MW or Btu/hour) divided by the furnace volume (in cubic meters or cubic feet); the furnace volume is that volume bounded by the front furnace wall where the burner is located, the furnace side waterwall, and extending to the level just below or in front of the first row of convection pass tubes.

Heat transfer medium means any material that is used to transfer heat from one point to another point.

High heat release rate means a heat release rate greater than 730,000 J/sec-m^3 (70,000 Btu/hour-ft^3).

Lignite means a type of coal classified as lignite A or lignite B by the American Society of Testing and Materials in ASTM D388–77, Standard Specification for Classification of Coals by Rank (IBR—see § 60.17).

Low heat release rate means a heat release rate of 730,000 J/sec-m^3 (70,000 Btu/hour-ft^3) or less.

Mass-feed stoker steam generating unit means a steam generating unit where solid fuel is introduced directly into a retort or is fed directly onto a grate where it is combusted.

Maximum heat input capacity means the ability of a steam generating unit to combust a stated maximum amount of fuel on a steady state basis, as determined by the physical design and characteristics of the steam generating unit.

Municipal-type solid waste means refuse, more than 50 percent of which is waste consisting of a mixture of paper, wood, yard wastes, food wastes, plastics, leather, rubber, and other combustible materials, and noncombustible materials such as glass and rock.

Natural gas means (1) a naturally occurring mixture of hydrocarbon and nonhydrocarbon gases found in geologic formations beneath the earth's surface, of which the principal constituent is methane; or (2) liquid petroleum gas, as defined by the American Society for Testing and Materials in ASTM D1835–82, ''Standard Specification for Liquid Petroleum Gases'' (IBR—see § 60.17).

Noncontinental area means the State of Hawaii, the Virgin Islands, Guam, American Samoa, the Commonwealth of Puerto Rico, or the Northern Mariana Islands.

Oil means crude oil or petroleum or a liquid fuel derived from crude oil or petroleum, including distillate and residual oil.

Petroleum refinery means industrial plants as classified by the Department of Commerce under Standard Industrial Classification (SIC) Code 29.

Potential sulfur dioxide emission rate means the theoretical sulfur dioxide emissions (ng/J, lb/million Btu heat input) that would result from combusting fuel in an uncleaned state and without using emission control systems.

Process heater means a device that is primarily used to heat a material to initiate or promote a chemical reaction in which the material participates as a reactant or catalyst.

Pulverized coal-fired steam generating unit means a steam generating unit in which pulverized coal is introduced into an air stream that carries the coal to the combustion chamber of the steam generating unit where it is fired in suspension. This includes both conventional pulverized coal-fired and micropulverized coal-fired steam generating units.

Residual oil means crude oil, fuel oil numbers 1 and 2 that have a nitrogen content greater than 0.05 weight percent, and all fuel oil numbers 4, 5 and 6, as defined by the American Society of Testing and Materials in ASTM D396–78, Standard Specifications for Fuel Oils (IBR—see § 60.17).

Spreader stoker steam generating unit means a steam generating unit in which solid fuel is introduced to the combustion zone by a mechanism that throws the fuel onto a grate from above. Combustion takes place both in suspension and on the grate.

Steam generating unit means a device that combusts any fuel or byproduct/waste to produce steam or to heat water or any other heat transfer medium. This term includes any municipal-type solid waste incinerator with a heat recovery steam generating unit or any steam generating unit that combusts fuel and is part of a cogeneration system or a combined cycle system. This term does not include process heaters as they are defined in this subpart.

Steam generating unit operating day means a 24-hour period between 12:00 midnight and the following midnight during which any fuel is combusted at any time in the steam generating unit. It is not necessary for fuel to be combusted continuously for the entire 24-hour period.

Very low sulfur oil means an oil that contains no more than 0.5 weight percent sulfur or that, when combusted without sulfur dioxide emission control, has a sulfur dioxide emission rate equal to or less than 215 ng/J (0.5 lb/million Btu) heat input.

Wet flue gas desulfurization technology means a sulfur dioxide control system that is located downstream of the steam generating unit and removes sulfur oxides from the combustion gases of the steam generating unit by contacting the combustion gas with an alkaline slurry or solution and forming a liquid material. This definition applies to devices where the aqueous liquid material product of this contact is subsequently converted to other forms. Alkaline reagents used in wet flue gas desulfurization technology include, but are not limited to, lime, limestone, and sodium.

Wet scrubber system means any emission control device that mixes an aqueous stream or slurry with the exhaust gases from a steam generating unit to control emissions of particulate matter or sulfur dioxide.

Wood means wood, wood residue, bark, or any derivative fuel or residue thereof, in any form, including, but not limited to, sawdust, sanderdust, wood chips, scraps, slabs, millings, shavings, and processed pellets made from wood or other forest residues.

[52 FR 47842, Dec. 16, 1987, as amended at 54 FR 51819, Dec. 18, 1989]

§ 60.42b Standard for sulfur dioxide.

(a) Except as provided in paragraphs (b), (c), (d), or (j) of this section, on and after the date on which the performance test is completed or required to be completed under §60.8 of this part, whichever date comes first, no owner or operator of an affected facility that combusts coal or oil shall cause to be discharged into the atmosphere any gases that contain sulfur dioxide in excess of 10 percent (0.10) of the potential sulfur dioxide emission rate (90 percent reduction) and that contain sulfur dioxide in excess of the emission limit determined according to the following formula:

$E_s=(K_a H_a+K_b H_b)/(H_a+H_b)$

where:

E_s is the sulfur dioxide emission limit, in ng/J or lb/million Btu heat input,

K_a is 520 ng/J (or 1.2 lb/million Btu),

K_b is 340 ng/J (or 0.80 lb/million Btu),

H_a is the heat input from the combustion of coal, in J (million Btu),

H_b is the heat input from the combustion of oil, in J (million Btu).

Only the heat input supplied to the affected facility from the combustion of coal and oil is counted under this section. No credit is provided for the heat input to the affected facility from the combustion of natural gas, wood, municipal-type solid waste, or other fuels or heat input to the affected facility from exhaust gases from another source, such as gas turbines, internal combustion engines, kilns, etc.

(b) On and after the date on which the performance test is completed or required to be completed under §60.8 of this part, whichever comes first, no owner or operator of an affected facility that combusts coal refuse alone in a fluidized bed combustion steam generating unit shall cause to be discharged into the atmosphere any gases that contain sulfur dioxide in excess of 20 percent of the potential sulfur dioxide emission rate (80 percent reduction) and that contain sulfur dioxide in excess of 520 ng/J (1.2 lb/million Btu) heat input. If coal or oil is fired with coal refuse, the affected facility is subject to paragraph (a) or (d) of this section, as applicable.

(c) On and after the date on which the performance test is completed or is required to be completed under §60.8 of this part, whichever comes first, no owner or operator of an affected facility that combusts coal or oil, either alone or in combination with any other fuel, and that uses an emerging technology for the control of sulfur dioxide emissions, shall cause to be discharged into the atmosphere any gases that contain sulfur dioxide in excess of 50 percent of the potential sulfur dioxide emission rate (50 percent reduction) and that contain sulfur dioxide in excess of the emission limit determined according to the following formula:

$E_s=(K_c H_c+K_d H_d)/H_c+H_d)$

where:

E_s is the sulfur dioxide emission limit, expressed in ng/J (lb/million Btu) heat input,

K_c is 260 ng/J (0.60 lb/million Btu),

K_d is 170 ng/J (0.40 lb/million Btu),

H_c is the heat input from the combustion of coal, J (million Btu),

H_d is the heat input from the combustion of oil, J (million Btu).

Only the heat input supplied to the affected facility from the combustion of coal and oil is counted under this section. No credit is provided for the heat input to the affected facility from the combustion of natural gas, wood, municipal-type solid waste, or other fuels, or from the heat input to the affected facility from exhaust gases from another source, such as gas turbines, internal combustion engines, kilns, etc.

(d) On and after the date on which the performance test is completed or required to be completed under §60.8 of this part, whichever comes first, no owner or operator of an affected facility listed in paragraphs (d) (1), (2), or (3) of this section shall cause to be discharged into the atmosphere any gases that contain sulfur dioxide in excess of 520 ng/J (1.2 lb/million Btu) heat input if the affected facility combusts coal, or 215 ng/J (0.5 lb/million Btu) heat

input if the affected facility combusts oil other than very low sulfur oil. Percent reduction requirements are not applicable to affected facilities under this paragraph.

(1) Affected facilities that have an annual capacity factor for coal and oil of 30 percent (0.30) or less and are subject to a Federally enforceable permit limiting the operation of the affected facility to an annual capacity factor for coal and oil of 30 percent (0.30) or less;

(2) Affected facilities located in a noncontinental area; or

(3) Affected facilities combusting coal or oil, alone or in combination with any other fuel, in a duct burner as part of a combined cycle system where 30 percent (0.30) or less of the heat input to the steam generating unit is from combustion of coal and oil in the duct burner and 70 percent (0.70) or more of the heat input to the steam generating unit is from the exhaust gases entering the duct burner.

(e) Except as provided in paragraph (f) of this section, compliance with the emission limits, fuel oil sulfur limits, and/or percent reduction requirements under this section are determined on a 30-day rolling average basis.

(f) Except as provided in paragraph (j)(2) of this section, compliance with the emission limits or fuel oil sulfur limits under this section is determined on a 24-hour average basis for affected facilities that (1) have a Federally enforceable permit limiting the annual capacity factor for oil to 10 percent or less, (2) combust only very low sulfur oil, and (3) do not combust any other fuel.

(g) Except as provided in paragraph (i) of this section, the sulfur dioxide emission limits and percent reduction requirements under this section apply at all times, including periods of start-up, shutdown, and malfunction.

(h) Reductions in the potential sulfur dioxide emission rate through fuel pretreatment are not credited toward the percent reduction requirement under paragraph (c) of this section unless:

(1) Fuel pretreatment results in a 50 percent or greater reduction in potential sulfur dioxide emissions and

(2) Emissions from the pretreated fuel (without combustion or post combustion sulfur dioxide control) are equal to or less than the emission limits specified in paragraph (c) of this section.

(i) An affected facility subject to paragraph (a), (b), or (c) of this section may combust very low sulfur oil or natural gas when the sulfur dioxide control system is not being operated because of malfunction or maintenance of the sulfur dioxide control system.

(j) Percent reduction requirements are not applicable to affected facilities combusting only very low sulfur oil. The owner or operator of an affected facility combusting very low sulfur oil shall demonstrate that the oil meets the definition of very low sulfur oil by: (1) Following the performance testing procedures as described in § 60.45b(c) or § 60.45b(d), and following the monitoring procedures as described in § 60.47b(a) or § 60.47b(b) to determine sulfur dioxide emission rate or fuel oil sulfur content; or (2) maintaining fuel receipts as described in § 60.49b(r).

[52 FR 47842, Dec. 16, 1987, as amended at 54 FR 51819, Dec. 18, 1989]

§ 60.43b Standard for particulate matter.

(a) On and after the date on which the initial performance test is completed or is required to be completed under § 60.8 of this part, whichever comes first, no owner or operator of an affected facility which combusts coal or combusts mixtures of coal with other fuels, shall cause to be discharged into the atmosphere from that affected facility any gases that contain particulate matter in excess of the following emission limits:

(1) 22 ng/J (0.05 lb/million Btu) heat input,

(i) If the affected facility combusts only coal, or

(ii) If the affected facility combusts coal and other fuels and has an annual capacity factor for the other fuels of 10 percent (0.10) or less.

(2) 43 ng/J (0.10 lb/million Btu) heat input if the affected facility combusts coal and other fuels and has an annual capacity factor for the other fuels greater than 10 percent (0.10) and is

subject to a federally enforceable requirement limiting operation of the affected facility to an annual capacity factor greater than 10 percent (0.10) for fuels other than coal.

(3) 86 ng/J (0.20 lb/million Btu) heat input if the affected facility combusts coal or coal and other fuels and

(i) Has an annual capacity factor for coal or coal and other fuels of 30 percent (0.30) or less,

(ii) Has a maximum heat input capacity of 73 MW (250 million Btu/hour) or less,

(iii) Has a federally enforceable requirement limiting operation of the affected facility to an annual capacity factor of 30 percent (0.30) or less for coal or coal and other solid fuels, and

(iv) Construction of the affected facility commenced after June 19, 1984, and before November 25, 1986.

(b) On and after the date on which the performance test is completed or required to be completed under 60.8 of this part, whichever date comes first, no owner or operator of an affected facility that combusts oil (or mixtures of oil with other fuels) and uses a conventional or emerging technology to reduce sulfur dioxide emissions shall cause to be discharged into the atmosphere from that affected facility any gases that contain particulate matter in excess of 43 ng/J (0.10 lb/million Btu) heat input.

(c) On and after the date on which the initial performance test is completed or is required to be completed under § 60.8 of this part, whichever date comes first, no owner or operator of an affected facility that combusts wood, or wood with other fuels, except coal, shall cause to be discharged from that affected facility any gases that contain particulate matter in excess of the following emission limits:

(1) 43 ng/J (0.10 lb/million Btu) heat input if the affected facility has an annual capacity factor greater than 30 percent (0.30) for wood.

(2) 86 ng/J (0.20 lb/million Btu) heat input if

(i) The affected facility has an annual capacity factor of 30 percent (0.30) or less for wood,

(ii) Is subject to a federally enforceable requirement limiting operation of the affected facility to an annual capacity factor of 30 percent (0.30) or less for wood, and

(iii) Has a maximum heat input capacity of 73 MW (250 million Btu/hour) or less.

(d) On and after the date on which the initial performance test is completed or is required to be completed under § 60.8 of this part, whichever date comes first, no owner or operator of an affected facility that combusts municipal-type solid waste or mixtures of municipal-type solid waste with other fuels, shall cause to be discharged into the atmosphere from that affected facility any gases that contain particulate matter in excess of the following emission limits:

(1) 43 ng/J (0.10 lb/million Btu) heat input,

(i) If the affected facility combusts only municipal-type solid waste, or

(ii) If the affected facility combusts municipal-type solid waste and other fuels and has an annual capacity factor for the other fuels of 10 percent (0.10) or less.

(2) 86 ng/J (0.20 lb/million Btu) heat input if the affected facility combusts municipal-type solid waste or municipal-type solid waste and other fuels; and

(i) Has an annual capacity factor for municipal-type solid waste and other fuels of 30 percent (0.30) or less,

(ii) Has a maximum heat input capacity of 73 MW (250 million Btu/hour) or less,

(iii) Has a federally enforceable requirement limiting operation of the affected facility to an annual capacity factor of 30 percent (0.30) for municipal-type solid waste, or municipal-type solid waste and other fuels, and

(iv) Construction of the affected facility commenced after June 19, 1984, but before November 25, 1986.

(e) For the purposes of this section, the annual capacity factor is determined by dividing the actual heat input to the steam generating unit during the calendar year from the combustion of coal, wood, or municipal-type solid waste, and other fuels, as applicable, by the potential heat input to the steam generating unit if the steam generating unit had been operated for 8,760 hours at the maximum design heat input capacity.

(f) On and after the date on which the initial performance test is completed or is required to be completed under 60.8 of this part, whichever date comes first, no owner or operator of an affected facility that combusts coal, oil, wood, or mixtures of these fuels with any other fuels shall cause to be discharged into the atmosphere any gases that exhibit greater than 20 percent opacity (6-minute average), except for one 6-minute period per hour of not more than 27 percent opacity.

(g) The particulate matter and opacity standards apply at all times, except during periods of startup, shutdown or malfunction.

[52 FR 47842, Dec. 16, 1987, as amended at 54 FR 51819, Dec. 18, 1989]

§ 60.44b Standard for nitrogen oxides.

(a) Except as provided under paragraphs (k) and (l) of this section, on and after the date on which the initial performance test is completed or is required to be completed under § 60.8 of this part, whichever date comes first, no owner or operator of an affected facility that is subject to the provisions of this section and that combusts only coal, oil, or natural gas shall cause to be discharged into the atmosphere from that affected facility any gases that contain nitrogen oxides (expressed as NO_2) in excess of the following emission limits:

Fuel/Steam generating unit type	Nitrogen oxide emission limits ng/J (lb/million Btu) (expressed as NO_2) heat input
(1) Natural gas and distillate oil, except (4):	
(i) Low heat release rate	43 (0.10)
(ii) High heat release rate	86 (0.20)
(2) Residual oil:	
(i) Low heat release rate	130 (0.30)
(ii) High heat release rate	170 (0.40)
(3) Coal:	
(i) Mass-feed stoker	210 (0.50)
(ii) Spreader stoker and fluidized bed combustion	260 (0.60)
(iii) Pulverized coal	300 (0.70)
(iv) Lignite, except (v)	260 (0.60)
(v) Lignite mined in North Dakota, South Dakota, or Montana and combusted in a slag tap furnace	340 (0.80)
(vi) Coal-derived synthetic fuels	210 (0.50)
(4) Duct burner used in a combined cycle system:	
(i) Natural gas and distillate oil	86 (0.20)
(ii) Residual oil	170 (0.40)

(b) Except as provided under paragraphs (k) and (l) of this section, on and after the date on which the initial performance test is completed or is required to be completed under § 60.8 of this part, whichever date comes first, no owner or operator of an affected facility that simultaneously combusts mixtures of coal, oil, or natural gas shall cause to be discharged into the atmosphere from that affected facility any gases that contain nitrogen oxides in excess of a limit determined by the use of the following formula:

$$E_n=[(EL_{go} H_{go})+(EL_{ro} H_{ro})+(EL_c H_c)]/(H_{go}+H_{ro}+H_c)$$

where:

E_n is the nitrogen oxides emission limit (expressed as NO_2), ng/J (lb/million Btu)

EL_{go} is the appropriate emission limit from paragraph (a)(1) for combustion of natural gas or distillate oil, ng/J (lb/million Btu)

H_{go} is the heat input from combustion of natural gas or distillate oil,

EL_{ro} is the appropriate emission limit from paragraph (a)(2) for combustion of residual oil,

H_{ro} is the heat input from combustion of residual oil,

EL_c is the appropriate emission limit from paragraph (a)(3) for combustion of coal, and

H_c is the heat input from combustion of coal.

(c) Except as provided under paragraph (l) of this section, on and after the date on which the initial performance test is completed or is required to be completed under § 60.8 of this part, whichever date comes first, no owner or operator of an affected facility that simultaneously combusts coal or oil, or a mixture of these fuels with natural gas, and wood, municipal-type solid waste, or any other fuel shall cause to be discharged into the atmosphere any gases that contain nitrogen oxides in excess of the emission limit for the coal or oil, or mixtures of these fuels with natural gas combusted in the affected facility, as determined pursuant to paragraph (a) or (b) of this section, unless the affected facility has an annual capacity factor for coal or oil, or mixture of these fuels with natural gas of 10 percent (0.10) or less and is subject to a federally enforceable requirement that limits operation of the affected facility to an annual capacity factor of 10

percent (0.10) or less for coal, oil, or a mixture of these fuels with natural gas.

(d) On and after the date on which the initial performance test is completed or is required to be completed under § 60.8 of this part, whichever date comes first, no owner or operator of an affected facility that simultaneously combusts natural gas with wood, municipal-type solid waste, or other solid fuel, except coal, shall cause to be discharged into the atmosphere from that affected facility any gases that contain nitrogen oxides in excess of 130 ng/J (0.30 lb/million Btu) heat input unless the affected facility has an annual capacity factor for natural gas of 10 percent (0.10) or less and is subject to a federally enforceable requirement that limits operation of the affected facility to an annual capacity factor of 10 percent (0.10) or less for natural gas.

(e) Except as provided under paragraph (l) of this section, on and after the date on which the initial performance test is completed or is required to be completed under § 60.8 of this part, whichever date comes first, no owner or operator of an affected facility that simultaneously combusts coal, oil, or natural gas with byproduct/waste shall cause to be discharged into the atmosphere any gases that contain nitrogen oxides in excess of the emission limit determined by the following formula unless the affected facility has an annual capacity factor for coal, oil, and natural gas of 10 percent (0.10) or less and is subject to a federally enforceable requirement that limits operation of the affected facility to an annual capacity factor of 10 percent (0.10) or less:

$$E_n=[(EL_{go}\ H_{go})+(EL_{ro}\ H_{ro})+\ (EL_c\ H_c)]/(H_{go}+H_{ro}+H_c)$$

where:

E_n is the nitrogen oxides emission limit (expressed as NO_2), ng/J (lb/million Btu)

EL_{go} is the appropriate emission limit from paragraph (a)(1) for combustion of natural gas or distillate oil, ng/J (lb/million Btu).

H_{go} is the heat input from combustion of natural gas, distillate oil and gaseous byproduct/waste, ng/J (lb/million Btu).

EL_{ro} is the appropriate emission limit from paragraph (a)(2) for combustion of residual oil, ng/J (lb/million Btu)

H_{ro} is the heat input from combustion of residual oil and/or liquid byproduct/waste.

EL_c is the appropriate emission limit from paragraph (a)(3) for combustion of coal, and

H_c is the heat input from combustion of coal.

(f) Any owner or operator of an affected facility that combusts byproduct/waste with either natural gas or oil may petition the Administrator within 180 days of the initial startup of the affected facility to establish a nitrogen oxides emission limit which shall apply specifically to that affected facility when the byproduct/waste is combusted. The petition shall include sufficient and appropriate data, as determined by the Administrator, such as nitrogen oxides emissions from the affected facility, waste composition (including nitrogen content), and combustion conditions to allow the Administrator to confirm that the affected facility is unable to comply with the emission limits in paragraph (e) of this section and to determine the appropriate emission limit for the affected facility.

(1) Any owner or operator of an affected facility petitioning for a facility-specific nitrogen oxides emission limit under this section shall:

(i) Demonstrate compliance with the emission limits for natural gas and distillate oil in paragraph (a)(1) of this section or for residual oil in paragraph (a)(2) of this section, as appropriate, by conducting a 30-day performance test as provided in § 60.46b(e). During the performance test only natural gas, distillate oil, or residual oil shall be combusted in the affected facility; and

(ii) Demonstrate that the affected facility is unable to comply with the emission limits for natural gas and distillate oil in paragraph (a)(1) of this section or for residual oil in paragraph (a)(2) of this section, as appropriate, when gaseous or liquid byproduct/waste is combusted in the affected facility under the same conditions and using the same technological system of emission reduction applied when demonstrating compliance under paragraph (f)(1)(i) of this section.

(2) The nitrogen oxides emission limits for natural gas or distillate oil in paragraph (a)(1) of this section or for residual oil in paragraph (a)(2) of this section, as appropriate, shall be applicable to the affected facility until and

unless the petition is approved by the Administrator. If the petition is approved by the Administrator, a facility-specific nitrogen oxides emission limit will be established at the nitrogen oxides emission level achievable when the affected facility is combusting oil or natural gas and byproduct/waste in a manner that the Administrator determines to be consistent with minimizing nitrogen oxides emissions.

(g) Any owner or operator of an affected facility that combusts hazardous waste (as defined by 40 CFR part 261 or 40 CFR part 761) with natural gas or oil may petition the Administrator within 180 days of the initial startup of the affected facility for a waiver from compliance with the nitrogen oxides emission limit which applies specifically to that affected facility. The petition must include sufficient and appropriate data, as determined by the Administrator, on nitrogen oxides emissions from the affected facility, waste destruction efficiencies, waste composition (including nitrogen content), the quantity of specific wastes to be combusted and combustion conditions to allow the Administrator to determine if the affected facility is able to comply with the nitrogen oxides emission limits required by this section. The owner or operator of the affected facility shall demonstrate that when hazardous waste is combusted in the affected facility, thermal destruction efficiency requirements for hazardous waste specified in an applicable federally enforceable requirement preclude compliance with the nitrogen oxides emission limits of this section. The nitrogen oxides emission limits for natural gas or distillate oil in paragraph (a)(1) of this section or for residual oil in paragraph (a)(2) of this section, as appropriate, are applicable to the affected facility until and unless the petition is approved by the Administrator. (See 40 CFR 761.70 for regulations applicable to the incineration of materials containing polychlorinated biphenyls (PCB's).)

(h) For purposes of paragraph (i) of this section, the nitrogen oxide standards under this section apply at all times including periods of startup, shutdown, or malfunction.

(i) Except as provided under paragraph (j) of this section, compliance with the emission limits under this section is determined on a 30-day rolling average basis.

(j) Compliance with the emission limits under this section is determined on a 24-hour average basis for the initial performance test and on a 3-hour average basis for subsequent performance tests for any affected facilities that:

(1) Combust, alone or in combination, only natural gas, distillate oil, or residual oil with a nitrogen content of 0.30 weight percent or less;

(2) Have a combined annual capacity factor of 10 percent or less for natural gas, distillate oil, and residual oil with a nitrogen content of 0.30 weight percent or less; and

(3) Are subject to a Federally enforceable requirement limiting operation of the affected facility to the firing of natural gas, distillate oil, and/or residual oil with a nitrogen content of 0.30 weight percent or less and limiting operation of the affected facility to a combined annual capacity factor of 10 percent or less for natural gas, distillate oil, and residual oil and a nitrogen content of 0.30 weight percent or less.

(k) Affected facilities that meet the criteria described in paragraphs (j) (1), (2), and (3) of this section, and that have a heat input capacity of 73 MW (250 million Btu/hour) or less, are not subject to the nitrogen oxides emission limits under this section.

(l) On and after the date on which the initial performance test is completed or is required to be completed under § 60.8 of this part, whichever date comes first, no owner or operator of an affected facility which commenced construction, modification, or reconstruction after July 9, 1997 shall cause to be discharged into the atmosphere from that affected facility any gases that contain nitrogen oxides (expressed as NO_2) in excess of the following limits:

(1) If the affected facility combusts coal, oil, or natural gas, or a mixture of these fuels, or with any other fuels: A limit of 86 ng/J_I (0.20 lb/million Btu) heat input unless the affected facility has an annual capacity factor for coal, oil, and natural gas of 10 percent (0.10)

or less and is subject to a federally enforceable requirement that limits operation of the facility to an annual capacity factor of 10 percent (0.10) or less for coal, oil, and natural gas; or

(2) If the affected facility has a low heat release rate and combusts natural gas or distillate oil in excess of 30 percent of the heat input from the combustion of all fuels, a limit determined by use of the following formula:

$E_n = [(0.10 * H_{go})+(0.20 * H_r)]/(H_{go}+H_r)$

Where:

E_n is the NO_X emission limit, (lb/million Btu),

H_{go} is the heat input from combustion of natural gas or distillate oil, and

H_r is the heat input from combustion of any other fuel.

[52 FR 47842, Dec. 16, 1987, as amended at 54 FR 51825, Dec. 18, 1989; 63 FR 49454, Sept. 16, 1998]

§ 60.45b Compliance and performance test methods and procedures for sulfur dioxide.

(a) The sulfur dioxide emission standards under § 60.42b apply at all times.

(b) In conducting the performance tests required under § 60.8, the owner or operator shall use the methods and procedures in appendix A of this part or the methods and procedures as specified in this section, except as provided in § 60.8(b). Section 60.8(f) does not apply to this section. The 30-day notice required in § 60.8(d) applies only to the initial performance test unless otherwise specified by the Administrator.

(c) The owner or operator of an affected facility shall conduct performance tests to determine compliance with the percent of potential sulfur dioxide emission rate (% P_s) and the sulfur dioxide emission rate (E_s) pursuant to § 60.42b following the procedures listed below, except as provided under paragraph (d) of this section.

(1) The initial performance test shall be conducted over the first 30 consecutive operating days of the steam generating unit. Compliance with the sulfur dioxide standards shall be determined using a 30-day average. The first operating day included in the initial performance test shall be scheduled within 30 days after achieving the maximum production rate at which the affected facility will be operated, but not later than 180 days after initial startup of the facility.

(2) If only coal or only oil is combusted, the following procedures are used:

(i) The procedures in Method 19 are used to determine the hourly sulfur dioxide emission rate (E_{ho}) and the 30-day average emission rate (E_{ao}). The hourly averages used to compute the 30-day averages are obtained from the continuous emission monitoring system of § 60.47b (a) or (b).

(ii) The percent of potential sulfur dioxide emission rate (% P_s) emitted to the atmosphere is computed using the following formula:

$$\% P_s = 100 (1 - \% R_g/100)(1 - \% R_f/100)$$

where:

% R_g is the sulfur dioxide removal efficiency of the control device as determined by Method 19, in percent.

% R_f is the sulfur dioxide removal efficiency of fuel pretreatment as determined by Method 19, in percent.

(3) If coal or oil is combusted with other fuels, the same procedures required in paragraph (c)(2) of this section are used, except as provided in the following:

(i) An adjusted hourly sulfur dioxide emission rate (E_{ho}^o) is used in Equation 19–19 of Method 19 to compute an adjusted 30-day average emission rate (E_{ao}^o). The E_{ho} is computed using the following formula:

$$E_{ho}^o = [E_{ho} - E_w(1 - X_k)]/X_k$$

where:

E_{ho}^o is the adjusted hourly sulfur dioxide emission rate, ng/J (lb/million Btu).

E_{ho} is the hourly sulfur dioxide emission rate, ng/J (lb/million Btu).

E_w is the sulfur dioxide concentration in fuels other than coal and oil combusted in the affected facility, as determined by the fuel sampling and analysis procedures in Method 19, ng/J (lb/million Btu). The value E_w for each fuel lot is used for each hourly average during the time that the lot is being combusted.

X_k is the fraction of total heat input from fuel combustion derived from coal, oil, or coal and oil, as determined by applicable procedures in Method 19.

(ii) To compute the percent of potential sulfur dioxide emission rate (% P_s), an adjusted % R_g (% R_g^o) is computed from the adjusted E_{ao}^o from paragraph (b)(3)(i) of this section and an adjusted

average sulfur dioxide inlet rate (E_{ai}^o) using the following formula:

$$\%\ R_g^o = 100\ (1.0 - E_{ao}^o / E_{ai}^o)$$

To compute E_{ai}^o, an adjusted hourly sulfur dioxide inlet rate (E_{hi}^o) is used. The E_{hi}^o is computed using the following formula:

$$E_{hi}^o = [E_{hi} - E_w(1 - X_k)]/X_k$$

where:

E_{hi}^o is the adjusted hourly sulfur dioxide inlet rate, ng/J (lb/million Btu).

E_{hi} is the hourly sulfur dioxide inlet rate, ng/J (lb/million Btu).

(4) The owner or operator of an affected facility subject to paragraph (b)(3) of this section does not have to measure parameters E_w or X_k if the owner or operator elects to assume that X_k=1.0. Owners or operators of affected facilities who assume X_k=1.0 shall

(i) Determine % P_s following the procedures in paragraph (c)(2) of this section, and

(ii) Sulfur dioxide emissions (E_s) are considered to be in compliance with sulfur dioxide emission limits under § 60.42b.

(5) The owner or operator of an affected facility that qualifies under the provisions of § 60.42b(d) does not have to measure parameters E_w or X_k under paragraph (b)(3) of this section if the owner or operator of the affected facility elects to measure sulfur dioxide emission rates of the coal or oil following the fuel sampling and analysis procedures under Method 19.

(d) Except as provided in paragraph (j), the owner or operator of an affected facility that combusts only very low sulfur oil, has an annual capacity factor for oil of 10 percent (0.10) or less, and is subject to a Federally enforceable requirement limiting operation of the affected facility to an annual capacity factor for oil of 10 percent (0.10) or less shall:

(1) Conduct the initial performance test over 24 consecutive steam generating unit operating hours at full load;

(2) Determine compliance with the standards after the initial performance test based on the arithmetic average of the hourly emissions data during each steam generating unit operating day if a continuous emission measurement system (CEMS) is used, or based on a daily average if Method 6B or fuel sampling and analysis procedures under Method 19 are used.

(e) The owner or operator of an affected facility subject to § 60.42b(d)(1) shall demonstrate the maximum design capacity of the steam generating unit by operating the facility at maximum capacity for 24 hours. This demonstration will be made during the initial performance test and a subsequent demonstration may be requested at any other time. If the 24-hour average firing rate for the affected facility is less than the maximum design capacity provided by the manufacturer of the affected facility, the 24-hour average firing rate shall be used to determine the capacity utilization rate for the affected facility, otherwise the maximum design capacity provided by the manufacturer is used.

(f) For the initial performance test required under § 60.8, compliance with the sulfur dioxide emission limits and percent reduction requirements under § 60.42b is based on the average emission rates and the average percent reduction for sulfur dioxide for the first 30 consecutive steam generating unit operating days, except as provided under paragraph (d) of this section. The initial performance test is the only test for which at least 30 days prior notice is required unless otherwise specified by the Administrator. The initial performance test is to be scheduled so that the first steam generating unit operating day of the 30 successive steam generating unit operating days is completed within 30 days after achieving the maximum production rate at which the affected facility will be operated, but not later than 180 days after initial startup of the facility. The boiler load during the 30-day period does not have to be the maximum design load, but must be representative of future operating conditions and include at least one 24-hour period at full load.

(g) After the initial performance test required under § 60.8, compliance with the sulfur dioxide emission limits and percent reduction requirements under § 60.42b is based on the average emission rates and the average percent reduction for sulfur dioxide for 30 successive steam generating unit operating

days, except as provided under paragraph (d). A separate performance test is completed at the end of each steam generating unit operating day after the initial performance test, and a new 30-day average emission rate and percent reduction for sulfur dioxide are calculated to show compliance with the standard.

(h) Except as provided under paragraph (i) of this section, the owner or operator of an affected facility shall use all valid sulfur dioxide emissions data in calculating % P_s and E_{ho} under paragraph (c), of this section whether or not the minimum emissions data requirements under §60.46b are achieved. All valid emissions data, including valid sulfur dioxides emission data collected during periods of startup, shutdown and malfunction, shall be used in calculating % P_s and E_{ho} pursuant to paragraph (c) of this section.

(i) During periods of malfunction or maintenance of the sulfur dioxide control systems when oil is combusted as provided under §60.42b(i), emission data are not used to calculate % P_s or E_s under §60.42b (a), (b) or (c), however, the emissions data are used to determine compliance with the emission limit under §60.42b(i).

(j) The owner or operator of an affected facility that combusts very low sulfur oil is not subject to the compliance and performance testing requirements of this section if the owner or operator obtains fuel receipts as described in §60.49b(r).

[52 FR 47842, Dec. 16, 1987, as amended at 54 FR 51820, 51825, Dec. 18, 1989]

§60.46b Compliance and performance test methods and procedures for particulate matter and nitrogen oxides.

(a) The particulate matter emission standards and opacity limits under §60.43b apply at all times except during periods of startup, shutdown, or malfunction. The nitrogen oxides emission standards under §60.44b apply at all times.

(b) Compliance with the particulate matter emission standards under §60.43b shall be determined through performance testing as described in paragraph (d) of this section.

(c) Compliance with the nitrogen oxides emission standards under §60.44b shall be determined through performance testing under paragraph (e) or (f), or under paragraphs (g) and (h) of this section, as applicable.

(d) To determine compliance with the particulate matter emission limits and opacity limits under §60.43b, the owner or operator of an affected facility shall conduct an initial performance test as required under §60.8 using the following procedures and reference methods:

(1) Method 3B is used for gas analysis when applying Method 5 or Method 17.

(2) Method 5, Method 5B, or Method 17 shall be used to measure the concentration of particulate matter as follows:

(i) Method 5 shall be used at affected facilities without wet flue gas desulfurization (FGD) systems; and

(ii) Method 17 may be used at facilities with or without wet scrubber systems provided the stack gas temperature does not exceed a temperature of 160 °C (320 °F). The procedures of sections 2.1 and 2.3 of Method 5B may be used in Method 17 only if it is used after a wet FGD system. Do not use Method 17 after wet FGD systems if the effluent is saturated or laden with water droplets.

(iii) Method 5B is to be used only after wet FGD systems.

(3) Method 1 is used to select the sampling site and the number of traverse sampling points. The sampling time for each run is at least 120 minutes and the minimum sampling volume is 1.7 dscm (60 dscf) except that smaller sampling times or volumes may be approved by the Administrator when necessitated by process variables or other factors.

(4) For Method 5, the temperature of the sample gas in the probe and filter holder is monitored and is maintained at 160 °C (320 °F).

(5) For determination of particulate matter emissions, the oxygen or carbon dioxide sample is obtained simultaneously with each run of Method 5, Method 5B or Method 17 by traversing the duct at the same sampling location.

(6) For each run using Method 5, Method 5B or Method 17, the emission

rate expressed in nanograms per joule heat input is determined using:

(i) The oxygen or carbon dioxide measurements and particulate matter measurements obtained under this section,

(ii) The dry basis F factor, and

(iii) The dry basis emission rate calculation procedure contained in Method 19 (appendix A).

(7) Method 9 is used for determining the opacity of stack emissions.

(e) To determine compliance with the emission limits for nitrogen oxides required under § 60.44b, the owner or operator of an affected facility shall conduct the performance test as required under § 60.8 using the continuous system for monitoring nitrogen oxides under § 60.48(b).

(1) For the initial compliance test, nitrogen oxides from the steam generating unit are monitored for 30 successive steam generating unit operating days and the 30-day average emission rate is used to determine compliance with the nitrogen oxides emission standards under § 60.44b. The 30-day average emission rate is calculated as the average of all hourly emissions data recorded by the monitoring system during the 30-day test period.

(2) Following the date on which the initial performance test is completed or is required to be completed under § 60.8 of this part, whichever date comes first, the owner or operator of an affected facility which combusts coal or which combusts residual oil having a nitrogen content greater than 0.30 weight percent shall determine compliance with the nitrogen oxides emission standards under § 60.44b on a continuous basis through the use of a 30-day rolling average emission rate. A new 30-day rolling average emission rate is calculated each steam generating unit operating day as the average of all of the hourly nitrogen oxides emission data for the preceding 30 steam generating unit operating days.

(3) Following the date on which the initial performance test is completed or is required to be completed under § 60.8 of this part, whichever date comes first, the owner or operator of an affected facility which has a heat input capacity greater than 73 MW (250 million Btu/hour) and which combusts natural gas, distillate oil, or residual oil having a nitrogen content of 0.30 weight percent or less shall determine compliance with the nitrogen oxides standards under § 60.44b on a continuous basis through the use of a 30-day rolling average emission rate. A new 30-day rolling average emission rate is calculated each steam generating unit operating day as the average of all of the hourly nitrogen oxides emission data for the preceding 30 steam generating unit operating days.

(4) Following the date on which the initial performance test is completed or required to be completed under § 60.8 of this part, whichever date comes first, the owner or operator of an affected facility which has a heat input capacity of 73 MW (250 million Btu/hour) or less and which combusts natural gas, distillate oil, or residual oil having a nitrogen content of 0.30 weight percent or less shall upon request determine compliance with the nitrogen oxides standards under § 60.44b through the use of a 30-day performance test. During periods when performance tests are not requested, nitrogen oxides emissions data collected pursuant to § 60.48b(g)(1) or § 60.48b(g)(2) are used to calculate a 30-day rolling average emission rate on a daily basis and used to prepare excess emission reports, but will not be used to determine compliance with the nitrogen oxides emission standards. A new 30-day rolling average emission rate is calculated each steam generating unit operating day as the average of all of the hourly nitrogen oxides emission data for the preceding 30 steam generating unit operating days.

(5) If the owner or operator of an affected facility which combusts residual oil does not sample and analyze the residual oil for nitrogen content, as specified in § 60.49b(e), the requirements of paragraph (iii) of this section apply and the provisions of paragraph (iv) of this section are inapplicable.

(f) To determine compliance with the emission limit for nitrogen oxides required by § 60.44b(a)(4) for duct burners used in combined cycle systems, the owner or operator of an affected facility shall conduct the performance test required under § 60.8 using the nitrogen

oxides and oxygen measurement procedures in 40 CFR part 60 appendix A, Method 20. During the performance test, one sampling site shall be located as close as practicable to the exhaust of the turbine, as provided by section 6.1.1 of Method 20. A second sampling site shall be located at the outlet to the steam generating unit. Measurements of nitrogen oxides and oxygen shall be taken at both sampling sites during the performance test. The nitrogen oxides emission rate from the combined cycle system shall be calculated by subtracting the nitrogen oxides emission rate measured at the sampling site at the outlet from the turbine from the nitrogen oxides emission rate measured at the sampling site at the outlet from the steam generating unit.

(g) The owner or operator of an affected facility described in §60.44b(j) or §60.44b(k) shall demonstrate the maximum heat input capacity of the steam generating unit by operating the facility at maximum capacity for 24 hours. The owner or operator of an affected facility shall determine the maximum heat input capacity using the heat loss method described in sections 5 and 7.3 of the ASME *Power Test Codes* 4.1 (see IBR §60.17(h)). This demonstration of maximum heat input capacity shall be made during the initial performance test for affected facilities that meet the criteria of §60.44b(j). It shall be made within 60 days after achieving the maximum production rate at which the affected facility will be operated, but not later than 180 days after initial start-up of each facility, for affected facilities meeting the criteria of §60.44b(k). Subsequent demonstrations may be required by the Administrator at any other time. If this demonstration indicates that the maximum heat input capacity of the affected facility is less than that stated by the manufacturer of the affected facility, the maximum heat input capacity determined during this demonstration shall be used to determine the capacity utilization rate for the affected facility. Otherwise, the maximum heat input capacity provided by the manufacturer is used.

(h) The owner or operator of an affected facility described in §60.44b(j) that has a heat input capacity greater than 73 MW (250 million Btu/hour) shall:

(1) Conduct an initial performance test as required under §60.8 over a minimum of 24 consecutive steam generating unit operating hours at maximum heat input capacity to demonstrate compliance with the nitrogen oxides emission standards under §60.44b using Method 7, 7A, 7E, or other approved reference methods; and

(2) Conduct subsequent performance tests once per calendar year or every 400 hours of operation (whichever comes first) to demonstrate compliance with the nitrogen oxides emission standards under §60.44b over a minimum of 3 consecutive steam generating unit operating hours at maximum heat input capacity using Method 7, 7A, 7E, or other approved reference methods.

[52 FR 47842, Dec. 16, 1987, as amended at 54 FR 51820, 51825, Dec. 18, 1989; 55 FR 18876, May 7, 1990]

§60.47b Emission monitoring for sulfur dioxide.

(a) Except as provided in paragraphs (b) and (f) of this section, the owner or operator of an affected facility subject to the sulfur dioxide standards under §60.42b shall install, calibrate, maintain, and operate continuous emission monitoring systems (CEMS) for measuring sulfur dioxide concentrations and either oxygen (O_2) or carbon dioxide (CO_2) concentrations and shall record the output of the systems. The sulfur dioxide and either oxygen or carbon dioxide concentrations shall both be monitored at the inlet and outlet of the sulfur dioxide control device.

(b) As an alternative to operating CEMS as required under paragraph (a) of this section, an owner or operator may elect to determine the average sulfur dioxide emissions and percent reduction by:

(1) Collecting coal or oil samples in an as-fired condition at the inlet to the steam generating unit and analyzing them for sulfur and heat content according to Method 19. Method 19 provides procedures for converting these measurements into the format to be used in calculating the average sulfur dioxide input rate, or

(2) Measuring sulfur dioxide according to Method 6B at the inlet or outlet to the sulfur dioxide control system. An initial stratification test is required to verify the adequacy of the Method 6B sampling location. The stratification test shall consist of three paired runs of a suitable sulfur dioxide and carbon dioxide measurement train operated at the candidate location and a second similar train operated according to the procedures in section 3.2 and the applicable procedures in section 7 of Performance Specification 2. Method 6B, Method 6A, or a combination of Methods 6 and 3 or 3B or Methods 6C and 3A are suitable measurement techniques. If Method 6B is used for the second train, sampling time and timer operation may be adjusted for the stratification test as long as an adequate sample volume is collected; however, both sampling trains are to be operated similarly. For the location to be adequate for Method 6B 24-hour tests, the mean of the absolute difference between the three paired runs must be less than 10 percent.

(3) A daily sulfur dioxide emission rate, E_D, shall be determined using the procedure described in Method 6A, section 7.6.2 (Equation 6A–8) and stated in ng/J (lb/million Btu) heat input.

(4) The mean 30-day emission rate is calculated using the daily measured values in ng/J (lb/million Btu) for 30 successive steam generating unit operating days using equation 19–20 of Method 19.

(c) The owner or operator of an affected facility shall obtain emission data for at least 75 percent of the operating hours in at least 22 out of 30 successive boiler operating days. If this minimum data requirement is not met with a single monitoring system, the owner or operator of the affected facility shall supplement the emission data with data collected with other monitoring systems as approved by the Administrator or the reference methods and procedures as described in paragraph (b) of this section.

(d) The 1-hour average sulfur dioxide emission rates measured by the CEMS required by paragraph (a) of this section and required under § 60.13(h) is expressed in ng/J or lb/million Btu heat input and is used to calculate the average emission rates under § 60.42b. Each 1-hour average sulfur dioxide emission rate must be based on more than 30 minutes of steam generating unit operation and include at least 2 data points with each representing a 15-minute period. Hourly sulfur dioxide emission rates are not calculated if the affected facility is operated less than 30 minutes in a 1-hour period and are not counted toward determination of a steam generating unit operating day.

(e) The procedures under § 60.13 shall be followed for installation, evaluation, and operation of the CEMS.

(1) All CEMS shall be operated in accordance with the applicable procedures under Performance Specifications 1, 2, and 3 (appendix B).

(2) Quarterly accuracy determinations and daily calibration drift tests shall be performed in accordance with Procedure 1 (appendix F).

(3) For affected facilities combusting coal or oil, alone or in combination with other fuels, the span value of the sulfur dioxide CEMS at the inlet to the sulfur dioxide control device is 125 percent of the maximum estimated hourly potential sulfur dioxide emissions of the fuel combusted, and the span value of the CEMS at the outlet to the sulfur dioxide control device is 50 percent of the maximum estimated hourly potential sulfur dioxide emissions of the fuel combusted.

(f) The owner or operator of an affected facility that combusts very low sulfur oil is not subject to the emission monitoring requirements of this section if the owner or operator obtains fuel receipts as described in § 60.49b(r).

[52 FR 47842, Dec. 16, 1987, as amended at 54 FR 51820, Dec. 18, 1989; 55 FR 5212, Feb. 14, 1990; 55 FR 18876, May 7, 1990]

§ 60.48b Emission monitoring for particulate matter and nitrogen oxides.

(a) The owner or operator of an affected facility subject to the opacity standard under § 60.43b shall install, calibrate, maintain, and operate a continuous monitoring system for measuring the opacity of emissions discharged to the atmosphere and record the output of the system.

(b) Except as provided under paragraphs (g), (h), and (i) of this section,

the owner or operator of an affected facility shall comply with either paragraphs (b)(1) or (b)(2) of this section.

(1) Install, calibrate, maintain, and operate a continuous monitoring system, and record the output of the system, for measuring nitrogen oxides emissions discharged to the atmosphere; or

(2) If the owner or operator has installed a nitrogen oxides emission rate continuous emission monitoring system (CEMS) to meet the requirements of part 75 of this chapter and is continuing to meet the ongoing requirements of part 75 of this chapter, that CEMS may be used to meet the requirements of this section, except that the owner or operator shall also meet the requirements of §60.49b. Data reported to meet the requirements of §60.49b shall not include data substituted using the missing data procedures in subpart D of part 75 of this chapter, nor shall the data have been bias adjusted according to the procedures of part 75 of this chapter.

(c) The continuous monitoring systems required under paragraph (b) of this section shall be operated and data recorded during all periods of operation of the affected facility except for continuous monitoring system breakdowns and repairs. Data is recorded during calibration checks, and zero and span adjustments.

(d) The 1-hour average nitrogen oxides emission rates measured by the continuous nitrogen oxides monitor required by paragraph (b) of this section and required under §60.13(h) shall be expressed in ng/J or lb/million Btu heat input and shall be used to calculate the average emission rates under §60.44b. The 1-hour averages shall be calculated using the data points required under §60.13(b). At least 2 data points must be used to calculate each 1-hour average.

(e) The procedures under §60.13 shall be followed for installation, evaluation, and operation of the continuous monitoring systems.

(1) For affected facilities combusting coal, wood or municipal-type solid waste, the span value for a continuous monitoring system for measuring opacity shall be between 60 and 80 percent.

(2) For affected facilities combusting coal, oil, or natural gas, the span value for nitrogen oxides is determined as follows:

Fuel	Span values for nitrogen oxides (PPM)
Natural gas	500
Oil	500
Coal	1,000
Mixtures	500(x+y)+1,000z

where:

x is the fraction of total heat input derived from natural gas,

y is the fraction of total heat input derived from oil, and

z is the fraction of total heat input derived from coal.

(3) All span values computed under paragraph (e)(2) of this section for combusting mixtures of regulated fuels are rounded to the nearest 500 ppm.

(f) When nitrogen oxides emission data are not obtained because of continuous monitoring system breakdowns, repairs, calibration checks and zero and span adjustments, emission data will be obtained by using standby monitoring systems, Method 7, Method 7A, or other approved reference methods to provide emission data for a minimum of 75 percent of the operating hours in each steam generating unit operating day, in at least 22 out of 30 successive steam generating unit operating days.

(g) The owner or operator of an affected facility that has a heat input capacity of 73 MW (250 million Btu/hour) or less, and which has an annual capacity factor for residual oil having a nitrogen content of 0.30 weight percent or less, natural gas, distillate oil, or any mixture of these fuels, greater than 10 percent (0.10) shall:

(1) Comply with the provisions of paragraphs (b), (c), (d), (e)(2), (e)(3), and (f) of this section, or

(2) Monitor steam generating unit operating conditions and predict nitrogen oxides emission rates as specified in a plan submitted pursuant to §60.49b(c).

(h) The owner or operator of an affected facility which is subject to the nitrogen oxides standards of §60.44b(a)(4) is not required to install or operate a continuous monitoring system to measure nitrogen oxides emissions.

(i) The owner or operator of an affected facility described in §60.44b(j) or

§ 60.44b(k) is not required to install or operate a continuous monitoring system for measuring nitrogen oxides emissions.

[52 FR 47842, Dec. 16, 1987, as amended at 54 FR 51825, Dec. 18, 1989; 63 FR 49455, Sept. 16, 1998]

§ 60.49b Reporting and recordkeeping requirements.

(a) The owner or operator of each affected facility shall submit notification of the date of initial startup, as provided by § 60.7. This notification shall include:

(1) The design heat input capacity of the affected facility and identification of the fuels to be combusted in the affected facility,

(2) If applicable, a copy of any Federally enforceable requirement that limits the annual capacity factor for any fuel or mixture of fuels under §§ 60.42b(d)(1), 60.43b(a)(2), (a)(3)(iii), (c)(2)(ii), (d)(2)(iii), 60.44b(c), (d), (e), (i), (j), (k), 60.45b(d), (g), 60.46b(h), or 60.48b(i),

(3) The annual capacity factor at which the owner or operator anticipates operating the facility based on all fuels fired and based on each individual fuel fired, and,

(4) Notification that an emerging technology will be used for controlling emissions of sulfur dioxide. The Administrator will examine the description of the emerging technology and will determine whether the technology qualifies as an emerging technology. In making this determination, the Administrator may require the owner or operator of the affected facility to submit additional information concerning the control device. The affected facility is subject to the provisions of § 60.42b(a) unless and until this determination is made by the Administrator.

(b) The owner or operator of each affected facility subject to the sulfur dioxide, particulate matter, and/or nitrogen oxides emission limits under §§ 60.42b, 60.43b, and 60.44b shall submit to the Administrator the performance test data from the initial performance test and the performance evaluation of the CEMS using the applicable performance specifications in appendix B. The owner or operator of each affected facility described in § 60.44b(j) or § 60.44b(k) shall submit to the Administrator the maximum heat input capacity data from the demonstration of the maximum heat input capacity of the affected facility.

(c) The owner or operator of each affected facility subject to the nitrogen oxides standard of § 60.44b who seeks to demonstrate compliance with those standards through the monitoring of steam generating unit operating conditions under the provisions of § 60.48b(g)(2) shall submit to the Administrator for approval a plan that identifies the operating conditions to be monitored under § 60.48b(g)(2) and the records to be maintained under § 60.49b(j). This plan shall be submitted to the Administrator for approval within 360 days of the initial startup of the affected facility. The plan shall:

(1) Identify the specific operating conditions to be monitored and the relationship between these operating conditions and nitrogen oxides emission rates (i.e., ng/J or lbs/million Btu heat input). Steam generating unit operating conditions include, but are not limited to, the degree of staged combustion (i.e., the ratio of primary air to secondary and/or tertiary air) and the level of excess air (i.e., flue gas oxygen level);

(2) Include the data and information that the owner or operator used to identify the relationship between nitrogen oxides emission rates and these operating conditions;

(3) Identify how these operating conditions, including steam generating unit load, will be monitored under § 60.48b(g) on an hourly basis by the owner or operator during the period of operation of the affected facility; the quality assurance procedures or practices that will be employed to ensure that the data generated by monitoring these operating conditions will be representative and accurate; and the type and format of the records of these operating conditions, including steam generating unit load, that will be maintained by the owner or operator under § 60.49b(j).

If the plan is approved, the owner or operator shall maintain records of predicted nitrogen oxide emission rates

and the monitored operating conditions, including steam generating unit load, identified in the plan.

(d) The owner or operator of an affected facility shall record and maintain records of the amounts of each fuel combusted during each day and calculate the annual capacity factor individually for coal, distillate oil, residual oil, natural gas, wood, and municipal-type solid waste for the reporting period. The annual capacity factor is determined on a 12-month rolling average basis with a new annual capacity factor calculated at the end of each calendar month.

(e) For an affected facility that combusts residual oil and meets the criteria under §§ 60.46b(e)(4), 60.44b (j), or (k), the owner or operator shall maintain records of the nitrogen content of the residual oil combusted in the affected facility and calculate the average fuel nitrogen content for the reporting period. The nitrogen content shall be determined using ASTM Method D3431–80, Test Method for Trace Nitrogen in Liquid Petroleum Hydrocarbons (IBR-see § 60.17), or fuel suppliers. If residual oil blends are being combusted, fuel nitrogen specifications may be prorated based on the ratio of residual oils of different nitrogen content in the fuel blend.

(f) For facilities subject to the opacity standard under § 60.43b, the owner or operator shall maintain records of opacity.

(g) Except as provided under paragraph (p) of this section, the owner or operator of an affected facility subject to the nitrogen oxides standards under § 60.44b shall maintain records of the following information for each steam generating unit operating day:

(1) Calendar date.

(2) The average hourly nitrogen oxides emission rates (expressed as NO_2) (ng/J or lb/million Btu heat input) measured or predicted.

(3) The 30-day average nitrogen oxides emission rates (ng/J or lb/million Btu heat input) calculated at the end of each steam generating unit operating day from the measured or predicted hourly nitrogen oxide emission rates for the preceding 30 steam generating unit operating days.

(4) Identification of the steam generating unit operating days when the calculated 30-day average nitrogen oxides emission rates are in excess of the nitrogen oxides emissions standards under § 60.44b, with the reasons for such excess emissions as well as a description of corrective actions taken.

(5) Identification of the steam generating unit operating days for which pollutant data have not been obtained, including reasons for not obtaining sufficient data and a description of corrective actions taken.

(6) Identification of the times when emission data have been excluded from the calculation of average emission rates and the reasons for excluding data.

(7) Identification of ''F'' factor used for calculations, method of determination, and type of fuel combusted.

(8) Identification of the times when the pollutant concentration exceeded full span of the continuous monitoring system.

(9) Description of any modifications to the continuous monitoring system that could affect the ability of the continuous monitoring system to comply with Performance Specification 2 or 3.

(10) Results of daily CEMS drift tests and quarterly accuracy assessments as required under appendix F, Procedure 1.

(h) The owner or operator of any affected facility in any category listed in paragraphs (h) (1) or (2) of this section is required to submit excess emission reports for any excess emissions which occurred during the reporting period.

(1) Any affected facility subject to the opacity standards under § 60.43b(e) or to the operating parameter monitoring requirements under § 60.13(i)(1).

(2) Any affected facility that is subject to the nitrogen oxides standard of § 60.44b, and that

(i) Combusts natural gas, distillate oil, or residual oil with a nitrogen content of 0.3 weight percent or less, or

(ii) Has a heat input capacity of 73 MW (250 million Btu/hour) or less and is required to monitor nitrogen oxides emissions on a continuous basis under § 60.48b(g)(1) or steam generating unit operating conditions under § 60.48b(g)(2).

(3) For the purpose of § 60.43b, excess emissions are defined as all 6-minute periods during which the average opacity exceeds the opacity standards under § 60.43b(f).

(4) For purposes of § 60.48b(g)(1), excess emissions are defined as any calculated 30-day rolling average nitrogen oxides emission rate, as determined under § 60.46b(e), which exceeds the applicable emission limits in § 60.44b.

(i) The owner or operator of any affected facility subject to the continuous monitoring requirements for nitrogen oxides under § 60.48(b) shall submit reports containing the information recorded under paragraph (g) of this section.

(j) The owner or operator of any affected facility subject to the sulfur dioxide standards under § 60.42b shall submit reports.

(k) For each affected facility subject to the compliance and performance testing requirements of § 60.45b and the reporting requirement in paragraph (j) of this section, the following information shall be reported to the Administrator:

(1) Calendar dates covered in the reporting period.

(2) Each 30-day average sulfur dioxide emission rate (ng/J or 1b/million Btu heat input) measured during the reporting period, ending with the last 30-day period; reasons for noncompliance with the emission standards; and a description of corrective actions taken.

(3) Each 30-day average percent reduction in sulfur dioxide emissions calculated during the reporting period, ending with the last 30-day period; reasons for noncompliance with the emission standards; and a description of corrective actions taken.

(4) Identification of the steam generating unit operating days that coal or oil was combusted and for which sulfur dioxide or diluent (oxygen or carbon dioxide) data have not been obtained by an approved method for at least 75 percent of the operating hours in the steam generating unit operating day; justification for not obtaining sufficient data; and description of corrective action taken.

(5) Identification of the times when emissions data have been excluded from the calculation of average emission rates; justification for excluding data; and description of corrective action taken if data have been excluded for periods other than those during which coal or oil were not combusted in the steam generating unit.

(6) Identification of ''F'' factor used for calculations, method of determination, and type of fuel combusted.

(7) Identification of times when hourly averages have been obtained based on manual sampling methods.

(8) Identification of the times when the pollutant concentration exceeded full span of the CEMS.

(9) Description of any modifications to the CEMS that could affect the ability of the CEMS to comply with Performance Specification 2 or 3.

(10) Results of daily CEMS drift tests and quarterly accuracy assessments as required under appendix F, Procedure 1.

(11) The annual capacity factor of each fired as provided under paragraph (d) of this section.

(l) For each affected facility subject to the compliance and performance testing requirements of § 60.45b(d) and the reporting requirements of paragraph (j) of this section, the following information shall be reported to the Administrator:

(1) Calendar dates when the facility was in operation during the reporting period;

(2) The 24-hour average sulfur dioxide emission rate measured for each steam generating unit operating day during the reporting period that coal or oil was combusted, ending in the last 24-hour period in the quarter; reasons for noncompliance with the emission standards; and a description of corrective actions taken;

(3) Identification of the steam generating unit operating days that coal or oil was combusted for which sulfur dioxide or diluent (oxygen or carbon dioxide) data have not been obtained by an approved method for at least 75 percent of the operating hours; justification for not obtaining sufficient data; and description of corrective action taken.

(4) Identification of the times when emissions data have been excluded from the calculation of average emission rates; justification for excluding

data; and description of corrective action taken if data have been excluded for periods other than those during which coal or oil were not combusted in the steam generating unit.

(5) Identification of ''F'' factor used for calculations, method of determination, and type of fuel combusted.

(6) Identification of times when hourly averages have been obtained based on manual sampling methods.

(7) Identification of the times when the pollutant concentration exceeded full span of the CEMS.

(8) Description of any modifications to the CEMS which could affect the ability of the CEMS to comply with Performance Specification 2 or 3.

(9) Results of daily CEMS drift tests and quarterly accuracy assessments as required under appendix F, Procedure 1.

(m) For each affected facility subject to the sulfur dioxide standards under §60.42(b) for which the minimum amount of data required under §60.47b(f) were not obtained during the reporting period, the following information is reported to the Administrator in addition to that required under paragraph (k) of this section:

(1) The number of hourly averages available for outlet emission rates and inlet emission rates.

(2) The standard deviation of hourly averages for outlet emission rates and inlet emission rates, as determined in Method 19, section 7.

(3) The lower confidence limit for the mean outlet emission rate and the upper confidence limit for the mean inlet emission rate, as calculated in Method 19, section 7.

(4) The ratio of the lower confidence limit for the mean outlet emission rate and the allowable emission rate, as determined in Method 19, section 7.

(n) If a percent removal efficiency by fuel pretreatment (i.e., % R_f) is used to determine the overall percent reduction (i.e., % R_o) under §60.45b, the owner or operator of the affected facility shall submit a signed statement with the report.

(1) Indicating what removal efficiency by fuel pretreatment (i.e., % R_f) was credited during the reporting period;

(2) Listing the quantity, heat content, and date each pre-treated fuel shipment was received during the reporting period, the name and location of the fuel pretreatment facility; and the total quantity and total heat content of all fuels received at the affected facility during the reporting period.

(3) Documenting the transport of the fuel from the fuel pretreatment facility to the steam generating unit.

(4) Including a signed statement from the owner or operator of the fuel pretreatment facility certifying that the percent removal efficiency achieved by fuel pretreatment was determined in accordance with the provisions of Method 19 (appendix A) and listing the heat content and sulfur content of each fuel before and after fuel pretreatment.

(o) All records required under this section shall be maintained by the owner or operator of the affected facility for a period of 2 years following the date of such record.

(p) The owner or operator of an affected facility described in §60.44b(j) or (k) shall maintain records of the following information for each steam generating unit operating day:

(1) Calendar date,

(2) The number of hours of operation, and

(3) A record of the hourly steam load.

(q) The owner or operator of an affected facility described in §60.44b(j) or §60.44b(k) shall submit to the Administrator a report containing:

(1) The annual capacity factor over the previous 12 months;

(2) The average fuel nitrogen content during the reporting period, if residual oil was fired; and

(3) If the affected facility meets the criteria described in §60.44b(j), the results of any nitrogen oxides emission tests required during the reporting period, the hours of operation during the reporting period, and the hours of operation since the last nitrogen oxides emission test.

(r) The owner or operator of an affected facility who elects to demonstrate that the affected facility combusts only very low sulfur oil under §60.42b(j)(2) shall obtain and maintain at the affected facility fuel receipts from the fuel supplier which certify

that the oil meets the definition of distillate oil as defined in § 60.41b. For the purposes of this section, the oil need not meet the fuel nitrogen content specification in the definition of distillate oil. Reports shall be submitted to the Administrator certifying that only very low sulfur oil meeting this definition was combusted in the affected facility during the reporting period.

(s) The reporting period for the reports required under this subpart is each six-month period. All reports shall be submitted to the Administrator and shall be postmarked by the 30th day following the end of the reporting period.

(t) Facility-specific nitrogen oxides standard for Rohm and Haas Kentucky Incorporated's Boiler No. 100 located in Louisville, Kentucky:

(1) *Definitions.*

Air ratio control damper is defined as the part of the low nitrogen oxides burner that is adjusted to control the split of total combustion air delivered to the reducing and oxidation portions of the combustion flame.

Flue gas recirculation line is defined as the part of Boiler No. 100 that recirculates a portion of the boiler flue gas back into the combustion air.

(2) *Standard for nitrogen oxides.* (i) When fossil fuel alone is combusted, the nitrogen oxides emission limit for fossil fuel in § 60.44b(a) applies.

(ii) When fossil fuel and chemical by-product waste are simultaneously combusted, the nitrogen oxides emission limit is 473 ng/J (1.1 lb/million Btu), and the air ratio control damper tee handle shall be at a minimum of 5 inches (12.7 centimeters) out of the boiler, and the flue gas recirculation line shall be operated at a minimum of 10 percent open as indicated by its valve opening position indicator.

(3) *Emission monitoring for nitrogen oxides.* (i) The air ratio control damper tee handle setting and the flue gas recirculation line valve opening position indicator setting shall be recorded during each 8-hour operating shift.

(ii) The nitrogen oxides emission limit shall be determined by the compliance and performance test methods and procedures for nitrogen oxides in § 60.46b.

(iii) The monitoring of the nitrogen oxides emission limit shall be performed in accordance with § 60.48b.

(4) *Reporting and recordkeeping requirements.* (i) The owner or operator of Boiler No. 100 shall submit a report on any excursions from the limits required by paragraph (b)(2) of this section to the Administrator with the quarterly report required by § 60.49b(i).

(ii) The owner or operator of Boiler No. 100 shall keep records of the monitoring required by paragraph (b)(3) of this section for a period of 2 years following the date of such record.

(iii) The owner or operator of Boiler No. 100 shall perform all the applicable reporting and recordkeeping requirements of § 60.49b.

(u) *Site-specific standard for Merck & Co., Inc.'s Stonewall Plant in Elkton, Virginia.* (1) This paragraph applies only to the pharmaceutical manufacturing facility, commonly referred to as the Stonewall Plant, located at Route 340 South, in Elkton, Virginia (''site'') and only to the natural gas-fired boilers installed as part of the powerhouse conversion required pursuant to 40 CFR 52.2454(g). The requirements of this paragraph shall apply, and the requirements of §§ 60.40b through 60.49b(t) shall not apply, to the natural gas-fired boilers installed pursuant to 40 CFR 52.2454(g).

(i) The site shall equip the natural gas-fired boilers with low nitrogen oxide (NO_X) technology.

(ii) The site shall install, calibrate, maintain, and operate a continuous monitoring and recording system for measuring NO_X emissions discharged to the atmosphere and opacity using a continuous emissions monitoring system or a predictive emissions monitoring system.

(iii) Within 180 days of the completion of the powerhouse conversion, as required by 40 CFR 52.2454, the site shall perform a stack test to quantify criteria pollutant emissions.

(2) [Reserved]

(v) The owner or operator of an affected facility may submit electronic quarterly reports for SO_2 and/or NO_X and/or opacity in lieu of submitting the written reports required under paragraphs (h), (i), (j), (k) or (l) of this section. The format of each quarterly

electronic report shall be coordinated with the permitting authority. The electronic report(s) shall be submitted no later than 30 days after the end of the calendar quarter and shall be accompanied by a certification statement from the owner or operator, indicating whether compliance with the applicable emission standards and minimum data requirements of this subpart was achieved during the reporting period. Before submitting reports in the electronic format, the owner or operator shall coordinate with the permitting authority to obtain their agreement to submit reports in this alternative format.

[52 FR 47842, Dec. 16, 1987, as amended at 54 FR 51820, 51825, Dec. 18, 1989; 60 FR 28062, May 30, 1995; 61 FR 14031, Mar. 29, 1996; 62 FR 52641, Oct. 8, 1997; 63 FR 49455, Sept. 16, 1998; 64 FR 7464, Feb. 12, 1999]

Subpart Dc—Standards of Performance for Small Industrial-Commercial-Institutional Steam Generating Units

SOURCE: 55 FR 37683, Sept. 12, 1990, unless otherwise noted.

§ 60.40c Applicability and delegation of authority.

(a) Except as provided in paragraph (d) of this section, the affected facility to which this subpart applies is each steam generating unit for which construction, modification, or reconstruction is commenced after June 9, 1989 and that has a maximum design heat input capacity of 29 megawatts (MW) (100 million Btu per hour (Btu/hr)) or less, but greater than or equal to 2.9 MW (10 million Btu/hr).

(b) In delegating implementation and enforcement authority to a State under section 111(c) of the Clean Air Act, §60.48c(a)(4) shall be retained by the Administrator and not transferred to a State.

(c) Steam generating units which meet the applicability requirements in paragraph (a) of this section are not subject to the sulfur dioxide (SO_2) or particulate matter (PM) emission limits, performance testing requirements, or monitoring requirements under this subpart (§§60.42c, 60.43c, 60.44c, 60.45c, 60.46c, or 60.47c) during periods of combustion research, as defined in §60.41c.

(d) Any temporary change to an existing steam generating unit for the purpose of conducting combustion research is not considered a modification under §60.14.

[55 FR 37683, Sept. 12, 1990, as amended at 61 FR 20736, May 8, 1996]

§ 60.41c Definitions.

As used in this subpart, all terms not defined herein shall have the meaning given them in the Clean Air Act and in subpart A of this part.

Annual capacity factor means the ratio between the actual heat input to a steam generating unit from an individual fuel or combination of fuels during a period of 12 consecutive calendar months and the potential heat input to the steam generating unit from all fuels had the steam ch a separate source (such as a stationary gas turbine, internal combustion engine, or kiln) provides exhaust gas to a steam generating unit.

Coal means all solid fuels classified as anthracite, bituminous, subbituminous, or lignite by the American Society for Testing and Materials in ASTM D388–77, ''Standard Specification for Classification of Coals by Rank'' (incorporated by reference—see §60.17); coal refuse; and petroleum coke. Synthetic fuels derived from coal for the purpose of creating useful heat, including but not limited to solvent-refined coal, gasified coal, coal-oil mixtures, and coal-water mixtures, are included in this definition for the purposes of this subpart.

Coal refuse means any by-product of coal mining or coal cleaning operations with an ash content greater than 50 percent (by weight) and a heating value less than 13,900 kilojoules per kilogram (kJ/kg) (6,000 Btu per pound (Btu/lb) on a dry basis.

Cogeneration steam generating unit means a steam generating unit that simultaneously produces both electrical (or mechanical) and thermal energy from the same primary energy source.

Combined cycle system means a system in which a separate source (such as a stationary gas turbine, internal combustion engine, or kiln) provides exhaust gas to a steam generating unit.

Combustion research means the experimental firing of any fuel or combination of fuels in a steam generating unit for the purpose of conducting research and development of more efficient combustion or more effective prevention or control of air pollutant emissions from combustion, provided that, during these periods of research and development, the heat generated is not used for any purpose other than preheating combustion air for use by that steam generating unit (i.e., the heat generated is released to the atmosphere without being used for space heating, process heating, driving pumps, preheating combustion air for other units, generating electricity, or any other purpose).

Conventional technology means wet flue gas desulfurization technology, dry flue gas desulfurization technology, atmospheric fluidized bed combustion technology, and oil hydrodesulfurization technology.

Distillate oil means fuel oil that complies with the specifications for fuel oil numbers 1 or 2, as defined by the American Society for Testing and Materials in ASTM D396–78, ''Standard Specification for Fuel Oils'' (incorporated by reference—see §60.17).

Dry flue gas desulfurization technology means a sulfur dioxide (SO_2) control system that is located between the steam generating unit and the exhaust vent or stack, and that removes sulfur oxides from the combustion gases of the steam generating unit by contacting the combustion gases with an alkaline slurry or solution and forming a dry powder material. This definition includes devices where the dry powder material is subsequently converted to another form. Alkaline reagents used in dry flue gas desulfurization systems include, but are not limited to, lime and sodium compounds.

Duct burner means a device that combusts fuel and that is placed in the exhaust duct from another source (such as a stationary gas turbine, internal combustion engine, kiln, etc.) to allow the firing of additional fuel to heat the exhaust gases before the exhaust gases enter a steam generating unit.

Emerging technology means any SO_2 control system that is not defined as a conventional technology under this section, and for which the owner or operator of the affected facility has received approval from the Administrator to operate as an emerging technology under §60.48c(a)(4).

Federally enforceable means all limitations and conditions that are enforceable by the Administrator, including the requirements of 40 CFR Parts 60 and 61, requirements within any applicable State implementation plan, and any permit requirements established under 40 CFR 52.21 or under 40 CFR 51.18 and 40 CFR 51.24.

Fluidized bed combustion technology means a device wherein fuel is distributed onto a bed (or series of beds) of limestone aggregate (or other sorbent materials) for combustion; and these materials are forced upward in the device by the flow of combustion air and the gaseous products of combustion. Fluidized bed combustion technology includes, but is not limited to, bubbling bed units and circulating bed units.

Fuel pretreatment means a process that removes a portion of the sulfur in a fuel before combustion of the fuel in a steam generating unit.

Heat input means heat derived from combustion of fuel in a steam generating unit and does not include the heat derived from preheated combustion air, recirculated flue gases, or exhaust gases from other sources (such as stationary gas turbines, internal combustion engines, and kilns).

Heat transfer medium means any material that is used to transfer heat from one point to another point.

Maximum design heat input capacity means the ability of a steam generating unit to combust a stated maximum amount of fuel (or combination of fuels) on a steady state basis as determined by the physical design and characteristics of the steam generating unit.

Natural gas means (1) a naturally occurring mixture of hydrocarbon and nonhydrocarbon gases found in geologic formations beneath the earth's surface, of which the principal constituent is methane, or (2) liquefied petroleum (LP) gas, as defined by the American Society for Testing and Materials in ASTM D1835–86, ''Standard Specification for Liquefied Petroleum

Gases'' (incorporated by reference—see § 60.17).

Noncontinental area means the State of Hawaii, the Virgin Islands, Guam, American Samoa, the Commonwealth of Puerto Rico, or the Northern Mariana Islands.

Oil means crude oil or petroleum, or a liquid fuel derived from crude oil or petroleum, including distillate oil and residual oil.

Potential sulfur dioxide emission rate means the theoretical SO_2 emissions (nanograms per joule [ng/J], or pounds per million Btu [lb/million Btu] heat input) that would result from combusting fuel in an uncleaned state and without using emission control systems.

Process heater means a device that is primarily used to heat a material to initiate or promote a chemical reaction in which the material participates as a reactant or catalyst.

Residual oil means crude oil, fuel oil that does not comply with the specifications under the definition of distillate oil, and all fuel oil numbers 4, 5, and 6, as defined by the American Society for Testing and Materials in ASTM D396–78, ''Standard Specification for Fuel Oils'' (incorporated by reference—see § 60.17).

Steam generating unit means a device that combusts any fuel and produces steam or heats water or any other heat transfer medium. This term includes any duct burner that combusts fuel and is part of a combined cycle system. This term does not include process heaters as defined in this subpart.

Steam generating unit operating day means a 24-hour period between 12:00 midnight and the following midnight during which any fuel is combusted at any time in the steam generating unit. It is not necessary for fuel to be combusted continuously for the entire 24-hour period.

Wet flue gas desulfurization technology means an SO_2 control system that is located between the steam generating unit and the exhaust vent or stack, and that removes sulfur oxides from the combustion gases of the steam generating unit by contacting the combustion gases with an alkaline slurry or solution and forming a liquid material. This definition includes devices where the liquid material is subsequently converted to another form. Alkaline reagents used in wet flue gas desulfurization systems include, but are not limited to, lime, limestone, and sodium compounds.

Wet scrubber system means any emission control device that mixes an aqueous stream or slurry with the exhaust gases from a steam generating unit to control emissions of particulate matter (PM) or SO_2.

Wood means wood, wood residue, bark, or any derivative fuel or residue thereof, in any form, including but not limited to sawdust, sanderdust, wood chips, scraps, slabs, millings, shavings, and processed pellets made from wood or other forest residues.

[55 FR 37683, Sept. 12, 1990, as amended at 61 FR 20736, May 8, 1996]

§ 60.42c Standard for sulfur dioxide.

(a) Except as provided in paragraphs (b), (c), and (e) of this section, on and after the date on which the initial performance test is completed or required to be completed under § 60.8 of this part, whichever date comes first, the owner the operator of an affected facility that combusts only coal shall neither: (1) cause to be discharged into the atmosphere from that affected facility any gases that contain SO_2 in excess of 10 percent (0.10) of the potential SO_2 emission rate (90 percent reduction); nor (2) cause to be discharged into the atmosphere from that affected facility any gases that contain SO_2 in excess of 520 ng/J (1.2 lb/million Btu) heat input. If coal is combusted with other fuels, the affected facility is subject to the 90 percent SO_2 reduction requirement specified in this paragraph and the emission limit is determined pursuant to paragraph (e)(2) of this section.

(b) Except as provided in paragraphs (c) and (e) of this section, on and after the date on which the initial performance test is completed or required to be completed under § 60.8 of this part, whichever date comes first, the owner or operator of an affected facility that:

(1) Combusts coal refuse alone in a fluidized bed combustion steam generating unit shall neither:

(i) Cause to be discharged into the atmosphere from that affected facility any gases that contain SO_2 in excess of

20 percent (0.20) of the potential SO_2 emission rate (80 percent reduction); nor

(ii) Cause to be discharged into the atmosphere from that affected facility any gases that contain SO_2 in excess of 520 ng/J (1.2 lb/million Btu) heat input. If coal is fired with coal refuse, the affected facility is subject to paragraph (a) of this section. If oil or any other fuel (except coal) is fired with coal refuse, the affected facility is subject to the 90 percent SO_2 reduction requirement specified in paragraph (a) of this section and the emission limit determined pursuant to paragraph (e)(2) of this section.

(2) Combusts only coal and that uses an emerging technology for the control of SO_2 emissions shall neither:

(i) Cause to be discharged into the atmosphere from that affected facility any gases that contain SO_2 in excess of 50 percent (0.50) of the potential SO_2 emission rate (50 percent reduction); nor

(ii) Cause to be discharged into the atmosphere from that affected facility any gases that contain SO_2 in excess of 260 ng/J (0.60 lb/million Btu) heat input. If coal is combusted with other fuels, the affected facility is subject to the 50 percent SO_2 reduction requirement specified in this paragraph and the emission limit determined pursuant to paragraph (e)(2) of this section.

(c) On and after the date on which the initial performance test is completed or required to be completed under §60.8 of this part, whichever date comes first, no owner or operator of an affected facility that combusts coal, alone or in combination with any other fuel, and is listed in paragraphs (c)(1), (2), (3), or (4) of this section shall cause to be discharged into the atmosphere from that affected facility any gases that contain SO_2 in excess of the emission limit determined pursuant to paragraph (e)(2) of this section. Percent reduction requirements are not applicable to affected facilities under this paragraph.

(1) Affected facilities that have a heat input capacity of 22 MW (75 million Btu/hr) or less.

(2) Affected facilities that have an annual capacity for coal of 55 percent (0.55) or less and are subject to a Federally enforceable requirement limiting operation of the affected facility to an annual capacity factor for coal of 55 percent (0.55) or less.

(3) Affected facilities located in a noncontinental area.

(4) Affected facilities that combust coal in a duct burner as part of a combined cycle system where 30 percent (0.30) or less of the heat entering the steam generating unit is from combustion of coal in the duct burner and 70 percent (0.70) or more of the heat entering the steam gen erating unit is from exhaust gases entering the duct burner.

(d) On and after the date on which the initial performance test is completed or required to be completed under §60.8 of this part, whichever date comes first, no owner or operator of an affected facility that combusts oil shall cause to be discharged into the atmosphere from that affected facility any gases that contain SO_2 in excess of 215 ng/J (0.50 lb/million Btu) heat input; or, as an alternative, no owner or operator of an affected facility that combusts oil shall combust oil in the affected facility that contains greater than 0.5 weight percent sulfur. The percent reduction requirements are not applicable to affected facilities under this paragraph.

(e) On and after the date on which the initial performance test is completed or required to be completed under §60.8 of this part, whichever date comes first, no owner or operator of an affected facility that combusts coal, oil, or coal and oil with any other fuel shall cause to be discharged into the atmosphere from that affected facility any gases that contain SO_2 in excess of the following:

(1) The percent of potential SO_2 emission rate required under paragraph (a) or (b)(2) of this section, as applicable, for any affected facility that

(i) Combusts coal in combination with any other fuel,

(ii) Has a heat input capacity greater than 22 MW (75 million Btu/hr), and

(iii) Has an annual capacity factor for coal greater than 55 percent (0.55); and

(2) The emission limit determined according to the following formula for any affected facility that combusts

coal, oil, or coal and oil with any other fuel:

$$E_s=(K_a H_a+K_b H_b+K_c H_c)/H_a+H_b+H_c)$$

where:

E_s is the SO_2 emission limit, expressed in ng/J or lb/million Btu heat input,

K_a is 520 ng/J (1.2 lb/million Btu),

K_b is 260 ng/J (0.60 lb/million Btu),

K_c is 215 ng/J (0.50 lb/million Btu),

H_a is the heat input from the combustion of coal, except coal combusted in an affected facility subject to paragraph (b)(2) of this section, in Joules (J) [million Btu]

H_b is the heat input from the combustion of coal in an affected facility subject to paragraph (b)(2) of this section, in J (million Btu)

H_c is the heat input from the combustion of oil, in J (million Btu).

(f) Reduction in the potential SO_2 emission rate through fuel pretreatment is not credited toward the percent reduction requirement under paragraph (b)(2) of this section unless:

(1) Fuel pretreatment results in a 50 percent (0.50) or greater reduction in the potential SO_2 emission rate; and

(2) Emissions from the pretreated fuel (without either combustion or post-combustion SO_2 control) are equal to or less than the emission limits specified under paragraph (b)(2) of this section.

(g) Except as provided in paragraph (h) of this section, compliance with the percent reduction requirements, fuel oil sulfur limits, and emission limits of this section shall be determined on a 30-day rolling average basis.

(h) For affected facilities listed under paragraphs (h)(1), (2), or (3) of this section, compliance with the emission limits or fuel oil sulfur limits under this section may be determined based on a certification from the fuel supplier, as described under §60.48c(f)(1), (2), or (3), as applicable.

(1) Distillate oil-fired affected facilities with heat input capacities between 2.9 and 29 MW (10 and 100 million Btu/hr).

(2) Residual oil-fired affected facilities with heat input capacities between 2.9 and 8.7 MW (10 and 30 million Btu/hr).

(3) Coal-fired facilities with heat input capacities between 2.9 and 8.7 MW (10 and 30 million Btu/hr).

(i) The SO_2 emission limits, fuel oil sulfur limits, and percent reduction requirements under this section apply at all times, including periods of startup, shutdown, and malfunction.

(j) Only the heat input supplied to the affected facility from the combustion of coal and oil is counted under this section. No credit is provided for the heat input to the affected facility from wood or other fuels or for heat derived from exhaust gases from other sources, such as stationary gas turbines, internal combustion engines, and kilns.

§60.43c Standard for particulate matter.

(a) On and after the date on which the initial performance test is completed or required to be completed under §60.8 of this part, whichever date comes first, no owner or operator of an affected facility that combusts coal or combusts mixtures of coal with other fuels and has a heat input capacity of 8.7 MW (30 million Btu/hr) or greater, shall cause to be discharged into the atmosphere from that affected facility any gases that contain PM in excess of the following emission limits:

(1) 22 ng/J (0.05 lb/million Btu) heat input if the affected facility combusts only coal, or combusts coal with other fuels and has an annual capacity factor for the other fuels of 10 percent (0.10) or less.

(2) 43 ng/J (0.10 lb/million Btu) heat imput if the affected facility combusts coal with other fuels, has an annual capacity factor for the other fuels greater than 10 percent (0.10), and is subject to a federally enforceable requirement limiting operation of the affected facility to an annual capacity factor greater than 10 percent (0.10) for fuels other than coal.

(b) On and after the date on which the initial performance test is completed or required to be completed under §60.8 of this part, whichever date comes first, no owner or operator of an affected facility that combusts wood or combusts mixtures of wood with other fuels (except coal) and has a heat input capacity of 8.7 MW (30 million Btu/hr) or greater, shall cause to be discharged into the atmosphere from that affected facility any gases that contain PM in

excess of the following emissions limits:

(1) 43 ng/J (0.10 lb/million Btu) heat input if the affected facility has an annual capacity factor for wood greater than 30 percent (0.30); or

(2) 130 ng/J (0.30 lb/million Btu) heat input if the affected facility has an annual capacity factor for wood of 30 percent (0.30) or less and is subject to a federally enforceable requirement limiting operation of the affected facility to an annual capacity factor for wood of 30 percent (0.30) or less.

(c) On and after the date on which the initial performance test is completed or required to be completed under §60.8 of this part, whichever date comes first, no owner or operator of an affected facility that combusts coal, wood, or oil and has a heat input capacity of 8.7 MW (30 million Btu/hr) or greater shall cause to be discharged into the atmosphere from that affected facility any gases that exhibit greater than 20 percent opacity (6-minute average), except for one 6-minute period per hour of not more than 27 percent opacity.

(d) The PM and opacity standards under this section apply at all times, except during periods of startup, shutdown, or malfunction.

§60.44c Compliance and performance test methods and procedures for sulfur dioxide.

(a) Except as provided in paragraphs (g) and (h) of this section and in §60.8(b), performance tests required under §60.8 shall be conducted following the procedures specified in paragraphs (b), (c), (d), (e), and (f) of this section, as applicable. Section 60.8(f) does not apply to this section. The 30-day notice required in §60.8(d) applies only to the initial performance test unless otherwise specified by the Administrator.

(b) The initial performance test required under §60.8 shall be conducted over 30 consecutive operating days of the steam generating unit. Compliance with the percent reduction requirements and SO_2 emission limits under §60.42c shall be determined using a 30-day average. The first operating day included in the initial performance test shall be scheduled within 30 days after achieving the maximum production rate at which the affect facility will be operated, but not later than 180 days after the initial startup of the facility. The steam generating unit load during the 30-day period does not have to be the maximum design heat input capacity, but must be representative of future operating conditions.

(c) After the initial performance test required under paragraph (b) and §60.8, compliance with the percent reduction requirements and SO_2 emission limits under §60.42c is based on the average percent reduction and the average $S0_2$ emission rates for 30 consecutive steam generating unit operating days. A separate performance test is completed at the end of each steam generating unit operating day, and a new 30-day average percent reduction and SO_2 emission rate are calculated to show compliance with the standard.

(d) If only coal, only oil, or a mixture of coal and oil is combusted in an affected facility, the procedures in Method 19 are used to determine the hourly SO_2 emission rate (E_{ho}) and the 30-day average SO_2 emission rate (E_{ao}). The hourly averages used to compute the 30-day averages are obtained from the continuous emission monitoring system (CEMS). Method 19 shall be used to calculate E_{ao} when using daily fuel sampling or Method 6B.

(e) If coal, oil, or coal and oil are combusted with other fuels:

(1) An adjusted E_{ho} ($E_{ho}o$) is used in Equation 19–19 of Method 19 to compute the adjusted E_{ao} ($E_{ao}o$). The $E_{ho}o$ is computed using the following formula:

$$E_{ho}o=[E_{ho}-E_w(1-X_k)]/X_k$$

where:

$E_{ho}o$ is the adjusted E_{ho}, ng/J (lb/million Btu)

E_{ho} is the hourly SO_2 emission rate, ng/J (lb/million Btu)

E_w is the SO_2 concentration in fuels other than coal and oil combusted in the affected facility, as determined by fuel sampling and analysis procedures in Method 9, ng/J (lb/million Btu). The value E_w for each fuel lot is used for each hourly average during the time that the lot is being combusted. The owner or operator does not have to measure E_w if the owner or operator elects to assume E_w=0.

X_k is the fraction of the total heat input from fuel combustion derived from coal and oil, as determined by applicable procedures in Method 19.

(2) The owner or operator of an affected facility that qualifies under the provisions of §60.42c(c) or (d) [where percent reduction is not required] does not have to measure the parameters E_w or X_k if the owner or operator of the affected facility elects to measure emission rates of the coal or oil using the fuel sampling and analysis procedures under Method 19.

(f) Affected facilities subject to the percent reduction requirements under §60.42c(a) or (b) shall determine compliance with the SO_2 emission limits under §60.42c pursuant to paragraphs (d) or (e) of this section, and shall determine compliance with the percent reduction requirements using the following procedures:

(1) If only coal is combusted, the percent of potential SO_2 emission rate is computed using the following formula:

$$\%P_s = 100(1 - \%R_g/100)(1 - \%R_f/100)$$

where

$\%P_s$ is the percent of potential SO_2 emission rate, in percent

$\%R_g$ is the SO_2 removal efficiency of the control device as determined by Method 19, in percent

$\%R_f$ is the SO_2 removal efficiency of fuel pretreatment as determined by Method 19, in percent

(2) If coal, oil, or coal and oil are combusted with other fuels, the same procedures required in paragraph (f)(1) of this section are used, except as provided for in the following:

(i) To compute the $\%P_s$, an adjusted $\%R_g$ ($\%R_go$) is computed from $E_{ao}o$ from paragraph (e)(1) of this section and an adjusted average SO_2 inlet rate ($E_{ai}o$) using the following formula:

$$\%R_go = 100\,[1.0 - E_{ao}o/E_{ai}o)]$$

where:

$\%R_go$ is the adjusted $\%R_g$, in percent

$E_{ao}o$ is the adjusted E_{ao}, ng/J (lb/million Btu)

$E_{ai}o$ is the adjusted average SO_2 inlet rate, ng/J (lb/million Btu)

(ii) To compute $E_{ai}o$, an adjusted hourly SO_2 inlet rate ($E_{hi}o$) is used. The $E_{hi}o$ is computed using the following formula:

$$E_{hi}o = [E_{hi} - E_w\,(1 - X_k)]/X_k$$

where:

$E_{hi}o$ is the adjusted E_{hi}, ng/J (lb/million Btu)

E_{hi} is the hourly SO_2 inlet rate, ng/J (lb/million Btu)

E_w is the SO_2 concentration in fuels other than coal and oil combusted in the affected facility, as determined by fuel sampling and analysis procedures in Method 19, ng/J (lb/million Btu). The value E_w for each fuel lot is used for each hourly average during the time that the lot is being combusted. The owner or operator does not have to measure E_w if the owner or operator elects to assume E_w = O.

X_k is the fraction of the total heat input from fuel combustion derived from coal and oil, as determined by applicable procedures in Method 19.

(g) For oil-fired affected facilities where the owner or operator seeks to demonstrate compliance with the fuel oil sulfur limits under §60.42c based on shipment fuel sampling, the initial performance test shall consist of sampling and analyzing the oil in the initial tank of oil to be fired in the steam generating unit to demonstrate that the oil contains 0.5 weight percent sulfur or less. Thereafter, the owner or operator of the affected facility shall sample the oil in the fuel tank after each new shipment of oil is received, as described under §60.46c(d)(2).

(h) For affected facilities subject to §60.42c(h)(1), (2), or (3) where the owner or operator seeks to demonstrate compliance with the SO_2 standards based on fuel supplier certification, the performance test shall consist of the certification, the certification from the fuel supplier, as described under §60.48c(f)(1), (2), or (3), as applicable.

(i) The owner or operator of an affected facility seeking to demonstrate compliance with the SO_2 standards under §60.42c(c)(2) shall demonstrate the maximum design heat input capacity of the steam generating unit by operating the steam generating unit at this capacity for 24 hours. This demonstration shall be made during the initial performance test, and a subsequent demonstration may be requested at any other time. If the demonstrated 24-hour averaged firing rate for the affected facility is less than the maximum design heat input capacity stated by the manufacturer of the affected facility, the demonstrated 24-hour average firing rate shall be used to determine the annual capacity factor for the

affected facility; otherwise, the maximum design heat input capacity provided by the manufacturer shall be used.

(j) The owner or operator of an affected facility shall use all valid SO_2 emissions data in calculating $\%P_s$ and E_{ho} under paragraphs (d), (e), or (f) of this section, as applicable, whether or not the minimum emissions data requirements under § 60.46c(f) are achieved. All valid emissions data, including valid data collected during periods of startup, shutdown, and malfunction, shall be used in calculating $\%P_s$ or E_{ho} pursuant to paragraphs (d), (e), or (f) of this section, as applicable.

§ 60.45c Compliance and performance test methods and procedures for particulate matter.

(a) The owner or operator of an affected facility subject to the PM and/or opacity standards under § 60.43c shall conduct an initial performance test as required under § 60.8, and shall conduct subsequent performance tests as requested by the Administrator, to determine compliance with the standards using the following procedures and reference methods.

(1) Method 1 shall be used to select the sampling site and the number of traverse sampling points. The sampling time for each run shall be at least 120 minutes and the minimum sampling volume shall be 1.7 dry square cubic meters (dscm) [60 dry square cubic feet (dscf)] except that smaller sampling times or volumes may be approved by the Administrator when necessitated by process variables or other factors.

(2) Method 3 shall be used for gas analysis when applying Method 5, Method 5B, of Method 17.

(3) Method 5, Method 5B, or Method 17 shall be used to measure the concentration of PM as follows:

(i) Method 5 may be used only at affected facilities without wet scrubber systems.

(ii) Method 17 may be used at affected facilities with or without wet scrubber systems provided the stack gas temperature does not exceed a temperature of 160 °C (320 °F). The procedures of Sections 2.1 and 2.3 of Method 5B may be used in Method 17 only if Method 17 is used in conjuction with a wet scrubber system. Method 17 shall not be used in conjuction with a wet scrubber system if the effluent is saturated or laden with water droplets.

(iii) Method 5B may be used in conjunction with a wet scrubber system.

(4) For Method 5 or Method 5B, the temperature of the sample gas in the probe and filter holder shall be monitored and maintained at 160 °C (320 °F).

(5) For determination of PM emissions, an oxygen or carbon dioxide measurement shall be obtained simultaneously with each run of Method 5, Method 5B, or Method 17 by traversing the duct at the same sampling location.

(6) For each run using Method 5, Method 5B, or Method 17, the emission rates expressed in ng/J (lb/million Btu) heat input shall be determined using:

(i) The oxygen or carbon dioxide measurements and PM measurements obtained under this section,

(ii) The dry basis F-factor, and

(iii) The dry basis emission rate calculation procedure contained in Method 19 (appendix A).

(7) Method 9 (6-minute average of 24 observations) shall be used for determining the opacity of stack emissions.

(b) The owner or operator of an affected facility seeking to demonstrate compliance with the PM standards under § 60.43c(b)(2) shall demonstrate the maximum design heat input capacity of the steam generating unit by operating the steam generating unit at this capacity for 24 hours. This demonstration shall be made during the initial performance test, and a subsequent demonstration may be requested at any other time. If the demonstrated 24-hour average firing rate for the affected facility is less than the maximum design heat input capacity stated by the manufacturer of the affected facility, the demonstrated 24-hour average firing rate shall be used to determine the annual capacity factor for the affected facility; otherwise, the maximum design heat input capacity provided by the manufacturer shall be used.

§ 60.46c Emission monitoring for sulfur dioxide

(a) Except as provided in paragraphs (d) and (e) of this section, the owner or

operator of an affected facility subject to the SO_2 emission limits under § 60.42c shall install, calibrate, maintain, and operate a CEMS for measuring SO_2 concentrations and either oxygen or carbon dioxide concentrations at the outlet of the SO_2 control device (or the outlet of the steam generating unit if no SO_2 control device is used), and shall record the output of the system. The owner or operator of an affected facility subject to the percent reduction requirements under § 60.42c shall measure SO_2 concentrations and either oxygen or carbon dioxide concentrations at both the inlet and outlet of the SO_2 control device.

(b) The 1-hour average SO_2 emission rates measured by a CEM shall be expressed in ng/J or lb/million Btu heat input and shall be used to calculate the average emission rates under § 60.42c. Each 1-hour average SO_2 emission rate must be based on at least 30 minutes of operation and include at least 2 data points representing two 15-minute periods. Hourly SO_2 emission rates are not calculated if the affected facility is operated less than 30 minutes in a 1-hour period and are not counted toward determination of a steam generating unit operating day.

(c) The procedures under § 60.13 shall be followed for installation, evaluation, and operation of the CEMS.

(1) All CEMS shall be operated in accordance with the applicable procedures under Performance Specifications 1, 2, and 3 (appendix B).

(2) Quarterly accuracy determinations and daily calibration drift tests shall be performed in accordance with Procedure 1 (appendix F).

(3) For affected facilities subject to the percent reduction requirements under § 60.42c, the span value of the SO_2 CEMS at the inlet to the SO_2 control device shall be 125 percent of the maximum estimated hourly potential SO_2 emission rate of the fuel combusted, and the span value of the SO_2 CEMS at the outlet from the SO_2 control device shall be 50 percent of the maximum estimated hourly potential SO_2 emission rate of the fuel combusted.

(4) For affected facilities that are not subject to the percent reduction requirements of § 60.42c, the span value of the SO_2 CEMS at the outlet from the SO_2 control device (or outlet of the steam generating unit if no SO_2 control device is used) shall be 125 percent of the maximum estimated hourly potential SO_2 emission rate of the fuel combusted.

(d) As an alternative to operating a CEMS at the inlet to the SO_2 control device (or outlet of the steam generating unit if no SO_2 control device is used) as required under paragraph (a) of this section, an owner or operator may elect to determine the average SO_2 emission rate by sampling the fuel prior to combustion. As an alternative to operating a CEM at the outlet from the SO_2 control device (or outlet of the steam generating unit if no SO_2 control device is used) as required under paragraph (a) of this section, an owner or operator may elect to determine the average SO_2 emission rate by using Method 6B. Fuel sampling shall be conducted pursuant to either paragraph (d)(1) or (d)(2) of this section. Method 6B shall be conducted pursuant to paragraph (d)(3) of this section.

(1) For affected facilities combusting coal or oil, coal or oil samples shall be collected daily in an as-fired condition at the inlet to the steam generating unit and analyzed for sulfur content and heat content according the Method 19. Method 19 provides procedures for converting these measurements into the format to be used in calculating the average SO_2 input rate.

(2) As an alternative fuel sampling procedure for affected facilities combusting oil, oil samples may be collected from the fuel tank for each steam generating unit immediately after the fule tank is filled and before any oil is combusted. The owner or operator of the affected facility shall analyze the oil sample to determine the sulfur content of the oil. If a partially empty fuel tank is refilled, a new sample and analysis of the fuel in the tank would be required upon filling. Results of the fuel analysis taken after each new shipment of oil is received shall be used as the daily value when calculating the 30-day rolling average until the next shipment is received. If the fuel analysis shows that the sulfur content in the fuel tank is greater than 0.5 weight percent sulfur, the owner or operator shall ensure that the sulfur

content of subsequent oil shipments is low enough to cause the 30-day rolling average sulfur content to be 0.5 weight percent sulfur or less.

(3) Method 6B may be used in lieu of CEMS to measure SO_2 at the inlet or outlet of the SO_2 control system. An initial stratification test is required to verify the adequacy of the Method 6B sampling location. The stratification test shall consist of three paired runs of a suitable SO_2 and carbon dioxide measurement train operated at the candidate location and a second similar train operated according to the procedures in §3.2 and the applicable procedures in section 7 of Performance Specification 2 (appendix B). Method 6B, Method 6A, or a combination of Methods 6 and 3 or Methods 6C and 3A are suitable measurement techniques. If Method 6B is used for the second train, sampling time and timer operation may be adjusted for the stratification test as long as an adequate sample volume is collected; however, both sampling trains are to be operated similarly. For the location to be adequate for Method 6B 24-hour tests, the mean of the absolute difference between the three paired runs must be less than 10 percent (0.10).

(e) The monitoring requirements of paragraphs (a) and (d) of this section shall not apply to affected facilities subject to §60.42c(h) (1), (2), or (3) where the owner or operator of the affected facility seeks to demonstrate compliance with the SO_2 standards based on fuel supplier certification, as described under §60.48c(f) (1), (2), or (3), as applicable.

(f) The owner or operator of an affected facility operating a CEMS pursuant to paragraph (a) of this section, or conducting as-fired fuel sampling pursuant to paragraph (d)(1) of this section, shall obtain emission data for at least 75 percent of the operating hours in at least 22 out of 30 successive steam generating unit operating days. If this minimum data requirement is not met with a single monitoring system, the owner or operator of the affected facility shall supplement the emission data with data collected with other monitoring systems as approved by the Administrator.

§ 60.47c Emission monitoring for particulate matter.

(a) The owner or operator of an affected facility combusting coal, residual oil, or wood that is subject to the opacity standards under §60.43c shall install, calibrate, maintain, and operate a CEMS for measuring the opacity of the emissions discharged to the atmosphere and record the output of the system.

(b) All CEMS for measuring opacity shall be operated in accordance with the applicable procedures under Performance Specification 1 (appendix B). The span value of the opacity CEMS shall be between 60 and 80 percent.

§ 60.48c Reporting and recordkeeping requirements.

(a) The owner or operator of each affected facility shall submit notification of the date of construction or reconstruction, anticipated startup, and actual startup, as provided by §60.7 of this part. This notification shall include:

(1) The design heat input capacity of the affected facility and identification of fuels to be combusted in the affected facility.

(2) If applicable, a copy of any Federally enforceable requirement that limits the annual capacity factor for any fuel or mixture of fuels under §60.42c, or §60.43c.

(3) The annual capacity factor at which the owner or operator anticipates operating the affected facility based on all fuels fired and based on each individual fuel fired.

(4) Notification if an emerging technology will be used for controlling SO_2 emissions. The Administrator will examine the description of the control device and will determine whether the technology qualifies as an emerging technology. In making this determination, the Administrator may require the owner or operator of the affected facility to submit additional information concerning the control device. The affected facility is subject to the provisions of §60.42c(a) or (b)(1), unless and until this determination is made by the Administrator.

(b) The owner or operator of each affected facility subject to the SO_2 emission limits of §60.42c, or the PM or

opacity limits of § 60.43c, shall submit to the Administrator the performance test data from the initial and any subsequent performance tests and, if applicable, the performance evaluation of the CEMS using the applicable performance specifications in appendix B.

(c) The owner or operator of each coal-fired, residual oil-fired, or wood-fired affected facility subject to the opacity limits under § 60.43c(c) shall submit excess emission reports for any excess emissions from the affected facility which occur during the reporting period.

(d) The owner or operator of each affected facility subject to the SO_2 emission limits, fuel oil sulfur limits, or percent reduction requirements under § 60.42c shall submit reports to the Administrator.

(e) The owner or operator of each affected facility subject to the SO_2 emission limits, fuel oil sulfur limits, or percent reduction requirements under § 60.43c shall keep records and submit reports as required under paragraph (d) of this section, including the following information, as applicable.

(1) Calendar dates covered in the reporting period.

(2) Each 30-day average SO_2 emission rate (nj/J or lb/million Btu), or 30-day average sulfur content (weight percent), calculated during the reporting period, ending with the last 30-day period; reasons for any noncompliance with the emission standards; and a description of corrective actions taken.

(3) Each 30-day average percent of potential SO_2 emission rate calculated during the reporting period, ending with the last 30-day period; reasons for any noncompliance with the emission standards; and a description of the corrective actions taken.

(4) Identification of any steam generating unit operating days for which SO_2 or diluent (oxygen or carbon dioxide) data have not been obtained by an approved method for at least 75 percent of the operating hours; justification for not obtaining sufficient data; and a description of corrective actions taken.

(5) Identification of any times when emissions data have been excluded from the calculation of average emission rates; justification for excluding data; and a description of corrective actions taken if data have been excluded for periods other than those during which coal or oil were not combusted in the steam generating unit.

(6) Identification of the F factor used in calculations, method of determination, and type of fuel combusted.

(7) Identification of whether averages have been obtained based on CEMS rather than manual sampling methods.

(8) If a CEMS is used, identification of any times when the pollutant concentration exceeded the full span of the CEMS.

(9) If a CEMS is used, description of any modifications to the CEMS that could affect the ability of the CEMS to comply with Performance Specifications 2 or 3 (appendix B).

(10) If a CEMS is used, results of daily CEMS drift tests and quarterly accuracy assessments as required under appendix F, Procedure 1.

(11) If fuel supplier certification is used to demonstrate compliance, records of fuel supplier certification is used to demonstrate compliance, records of fuel supplier certification as described under paragraph (f)(1), (2), or (3) of this section, as applicable. In addition to records of fuel supplier certifications, the report shall include a certified statement signed by the owner or operator of the affected facility that the records of fuel supplier certifications submitted represent all of the fuel combusted during the reporting period.

(f) Fuel supplier certification shall include the following information:

(1) For distillate oil:

(i) The name of the oil supplier; and

(ii) A statement from the oil supplier that the oil complies with the specifications under the definition of distillate oil in § 60.41c.

(2) For residual oil:

(i) The name of the oil supplier;

(ii) The location of the oil when the sample was drawn for analysis to determine the sulfur content of the oil, specifically including whether the oil was sampled as delivered to the affected facility, or whether the sample was drawn from oil in storage at the oil supplier's or oil refiner's facility, or other location;

(iii) The sulfur content of the oil from which the shipment came (or of the shipment itself); and

(iv) The method used to determine the sulfur content of the oil.

(3) For coal:

(i) The name of the coal supplier;

(ii) The location of the coal when the sample was collected for analysis to determine the properties of the coal, specifically including whether the coal was sampled as delivered to the affected facility or whether the sample was collected from coal in storage at the mine, at a coal preparation plant, at a coal supplier's facility, or at another location. The certification shall include the name of the coal mine (and coal seam), coal storage facility, or coal preparation plant (where the sample was collected);

(iii) The results of the analysis of the coal from which the shipment came (or of the shipment itself) including the sulfur content, moisture content, ash content, and heat content; and

(iv) The methods used to determine the properties of the coal.

(g) The owner or operator of each affected facility shall record and maintain records of the amounts of each fuel combusted during each day.

(h) The owner or operator of each affected facility subject to a Federally enforceable requirement limiting the annual capacity factor for any fuel or mixture of fuels under §60.42c or §60.43c shall calculate the annual capacity factor individually for each fuel combusted. The annual capacity factor is determined on a 12-month rolling average basis with a new annual capacity factor calculated at the end of the calendar month.

(i) All records required under this section shall be maintained by the owner or operator of the affected facility for a period of two years following the date of such record.

(j) The reporting period for the reports required under this subpart is each six-month period. All reports shall be submitted to the Administrator and shall be postmarked by the 30th day following the end of the reporting period.

[55 FR 37683, Sept. 12, 1990, as amended at 64 FR 7465, Feb. 12, 1999]

Subpart E—Standards of Performance for Incinerators

§ 60.50 Applicability and designation of affected facility.

(a) The provisions of this subpart are applicable to each incinerator of more than 45 metric tons per day charging rate (50 tons/day), which is the affected facility.

(b) Any facility under paragraph (a) of this section that commences construction or modification after August 17, 1971, is subject to the requirements of this subpart.

[42 FR 37936, July 25, 1977]

§ 60.51 Definitions.

As used in this subpart, all terms not defined herein shall have the meaning given them in the Act and in subpart A of this part.

(a) *Incinerator* means any furnace used in the process of burning solid waste for the purpose of reducing the volume of the waste by removing combustible matter.

(b) *Solid waste* means refuse, more than 50 percent of which is municipal type waste consisting of a mixture of paper, wood, yard wastes, food wastes, plastics, leather, rubber, and other combustibles, and noncombustible materials such as glass and rock.

(c) *Day* means 24 hours.

[36 FR 24877, Dec. 23, 1971, as amended at 39 FR 20792, June 14, 1974]

§ 60.52 Standard for particulate matter.

(a) On and after the date on which the performance test required to be conducted by §60.8 is completed, no owner or operator subject to the provisions of this part shall cause to be discharged into the atmosphere from any affected facility any gases which contain particulate matter in excess of 0.18 g/dscm (0.08 gr/dscf) corrected to 12 percent CO_2.

[39 FR 20792, June 14, 1974]

§ 60.53 Monitoring of operations.

(a) The owner or operator of any incinerator subject to the provisions of this part shall record the daily charging rates and hours of operation.

§ 60.54 Test methods and procedures.

(a) In conducting the performance tests required in § 60.8, the owner or operator shall use as reference methods and procedures the test methods in appendix A of this part or other methods and procedures as specified in this section, except as provided in § 60.8(b).

(b) The owner or operator shall determine compliance with the particulate matter standard in § 60.52 as follows:

(1) The emission rate (c_{12}) of particulate matter, corrected to 12 percent CO_2, shall be computed for each run using the following equation:

$$c_{12} = c_s (12/\%CO_2)$$

where:

c_{12}=concentration of particulate matter, corrected to 12 percent CO_2, g/dscm (gr/dscf).

c_s=concentration of particulate matter, g/dscm (gr/dscf).

$\%CO_2$=CO_2 concentration, percent dry basis.

(2) Method 5 shall be used to determine the particulate matter concentration (c_s). The sampling time and sample volume for each run shall be at least 60 minutes and 0.85 dscm (30 dscf).

(3) The emission rate correction factor, integrated or grab sampling and analysis procedure of Method 3B shall be used to determine CO_2 concentration ($\%CO_2$).

(i) The CO_2 sample shall be obtained simultaneously with, and at the same traverse points as, the particulate run. If the particulate run has more than 12 traverse points, the CO_2 traverse points may be reduced to 12 if Method 1 is used to locate the 12 CO_2 traverse points. If individual CO_2 samples are taken at each traverse point, the CO_2 concentration ($\%CO_2$) used in the correction equation shall be the arithmetic mean of all the individual CO_2 sample concentrations at each traverse point.

(ii) If sampling is conducted after a wet scrubber, an ''adjusted'' CO_2 concentration [$(\%CO_2)_{adj}$], which accounts for the effects of CO_2 absorption and dilution air, may be used instead of the CO_2 concentration determined in this paragraph. The adjusted CO_2 concentration shall be determined by either of the procedures in paragraph (c) of this section.

(c) The owner or operator may use either of the following procedures to determine the adjusted CO_2 concentration.

(1) The volumetric flow rates at the inlet and outlet of the wet scrubber and the inlet CO_2 concentration may be used to determine the adjusted CO_2 concentration [$(\%CO_2)_{adj}$] using the following equation:

$$(\%CO_2)_{adj}=(\%CO_2)_{di}\ (Q_{di}/Q_{do})$$

where:

$(\%CO_2)_{adj}$=adjusted outlet CO_2 concentration, percent dry basis.

$(\%CO_2)_{di}$=CO_2 concentration measured before the scrubber, percent dry basis.

Q_{di}=volumetric flow rate of effluent gas before the wet scrubber, dscm/min (dscf/min).

Q_{do}=volumetric flow rate of effluent gas after the wet scrubber, dscm/min (dscf/min).

(i) At the outlet, Method 5 is used to determine the volumetric flow rate (Q_{do}) of the effluent gas.

(ii) At the inlet, Method 2 is used to determine the volumetric flow rate (Q_{di}) of the effluent gas as follows: Two full velocity traverses are conducted, one immediately before and one immediately after each particulate run conducted at the outlet, and the results are averaged.

(iii) At the inlet, the emission rate correction factor, integrated sampling and analysis procedure of Method 3B is used to determine the CO_2 concentration [$(\%CO_2)_{di}$] as follows: At least nine sampling points are selected randomly from the velocity traverse points and are divided randomly into three sets, equal in number of points; the first set of three or more points is used for the first run, the second set for the second run, and the third set for the third run. The CO_2 sample is taken simultaneously with each particulate run being conducted at the outlet, by traversing the three sampling points (or more) and sampling at each point for equal increments of time.

(2) Excess air measurements may be used to determine the adjusted CO_2 concentration [$(\%CO_2)_{adj}$] using the following equation:

$$(\%CO_2)_{adj}=(\%CO_2)_{di}\ [(100+\%EA_i)/(100+\%EA_o)]$$

where:

$(\%CO_2)_{adj}$=adjusted outlet CO_2 concentration, percent dry basis.

$(\%CO_2)_{di}$=CO_2 concentration at the inlet of the wet scrubber, percent dry basis.

$\%EA_i$=excess air at the inlet of the scrubber, percent.

$\%EA_o$=excess air at the outlet of the scrubber, percent.

(i) A gas sample is collected as in paragraph (c)(1)(iii) of this section and the gas samples at both the inlet and outlet locations are analyzed for CO_2, O_2, and N_2.

(ii) Equation 3B–3 of Method 3B is used to compute the percentages of excess air at the inlet and outlet of the wet scrubber.

[54 FR 6665, Feb. 14, 1989, as amended at 55 FR 5212, Feb. 14, 1990]

Subpart Ea—Standards of Performance for Municipal Waste Combustors for Which Construction is Commenced After December 20, 1989 and on or Before September 20, 1994

SOURCE: 56 FR 5507, Feb. 11, 1991, unless otherwise noted.

§ 60.50a Applicability and delegation of authority.

(a) The affected facility to which this subpart applies is each municipal waste combustor unit with a municipal waste combustor unit capacity greater than 225 megagrams per day (250 tons per day) of municipal solid waste for which construction, modification, or reconstruction is commenced as specified in paragraphs (a)(1) and (a)(2) of this section.

(1) Construction is commenced after December 20, 1989 and on or before September 20, 1994.

(2) Modification or reconstruction is commenced after December 20, 1989 and on or before June 19, 1996.

(b) [Reserved]

(c) Any unit combusting a single-item waste stream of tires is not subject to this subpart if the owner or operator of the unit:

(1) Notifies the Administrator of an exemption claim; and

(2) Provides data documenting that the unit qualifies for this exemption.

(d) Any cofired combustor, as defined under §60.51a, located at a plant that meets the capacity specifications in paragraph (a) of this section is not subject to this subpart if the owner or operator of the cofired combustor:

(1) Notifies the Administrator of an exemption claim;

(2) Provides a copy of the federally enforceable permit (specified in the definition of cofired combustor in this section); and

(3) Keeps a record on a calendar quarter basis of the weight of municipal solid waste combusted at the cofired combustor and the weight of all other fuels combusted at the cofired combustor.

(e) Any cofired combustor that is subject to a federally enforceable permit limiting the operation of the combustor to no more than 225 megagrams per day (250 tons per day) of municipal solid waste is not subject to this subpart.

(f) Physical or operational changes made to an existing municipal waste combustor unit primarily for the purpose of complying with emission guidelines under subpart Cb are not considered a modification or reconstruction and do not result in an existing municipal waste combustor unit becoming subject to this subpart.

(g) A qualifying small power production facility, as defined in section 3(17)(C) of the Federal Power Act (16 U.S.C. 796(17)(C)), that burns homogeneous waste (such as automotive tires or used oil, but not including refuse-derived fuel) for the production of electric energy is not subject to this subpart if the owner or operator of the facility notifies the Administrator of an exemption claim and provides data documenting that the facility qualifies for this exemption.

(h) A qualifying cogeneration facility, as defined in section 3(18)(B) of the Federal Power Act (16 U.S.C. 796(18)(B)), that burns homogeneous waste (such as automotive tires or used oil, but not including refuse-derived fuel) for the production of electric energy and steam or forms of useful energy (such as heat) that are used for industrial, commercial, heating, or cooling purposes, is not subject to this subpart if the owner or operator of the facility notifies the Administrator of an exemption claim and provides data documenting that the facility qualifies for this exemption.

(i) Any unit required to have a permit under section 3005 of the Solid Waste Disposal Act is not subject to this subpart.

(j) Any materials recovery facility (including primary or secondary smelters) that combusts waste for the primary purpose of recovering metals is not subject to this subpart.

(k) Pyrolysis/combustion units that are an integrated part of a plastics/rubber recycling unit (as defined in § 60.51a) are not subject to this subpart if the owner or operator of the plastics/rubber recycling unit keeps records of: the weight of plastics, rubber, and/or rubber tires processed on a calendar quarter basis; the weight of chemical plant feedstocks and petroleum refinery feedstocks produced and marketed on a calendar quarter basis; and the name and address of the purchaser of the feedstocks. The combustion of gasoline, diesel fuel, jet fuel, fuel oils, residual oil, refinery gas, petroleum coke, liquified petroleum gas, propane, or butane produced by chemical plants or petroleum refineries that use feedstocks produced by plastics/rubber recycling units are not subject to this subpart.

(l) The following authorities shall be retained by the Administrator and not transferred to a State:

None.

(m) This subpart shall become effective on August 12, 1991.

[56 FR 5507, Feb. 11, 1991, as amended at 60 FR 65384, Dec. 19, 1995]

§ 60.51a Definitions.

ASME means the American Society of Mechanical Engineers.

Batch MWC means an MWC unit designed such that it cannot combust MSW continuously 24 hours per day because the design does not allow waste to be fed to the unit or ash to be removed while combustion is occurring.

Bubbling fluidized bed combustor means a fluidized bed combustor in which the majority of the bed material remains in a fluidized state in the primary combustion zone.

Calendar quarter means a consecutive 3-month period (nonoverlapping) beginning on January 1, April 1, July 1, and October 1.

Chief facility operator means the person in direct charge and control of the operation of an MWC and who is responsible for daily on-site supervision, technical direction, management, and overall performance of the facility.

Circulating fluidized bed combustor means a fluidized bed combustor in which the majority of the fluidized bed material is carried out of the primary combustion zone and is transported back to the primary zone through a recirculation loop.

Clean wood means untreated wood or untreated wood products including clean untreated lumber, tree stumps (whole or chipped), and tree limbs (whole or chipped). Clean wood does not include yard waste, which is defined elsewhere in this section, or construction, renovation, and demolition wastes (which includes but is not limited to railroad ties and telephone poles), which are exempt from the definition of municipal solid waste in this section.

Cofired combustor means a unit combusting municipal solid waste with nonmunicipal solid waste fuel (e.g., coal, industrial process waste) and subject to a federally enforceable permit limiting the unit to combusting a fuel feed stream, 30 percent or less of the weight of which is comprised, in aggregate, of municipal solid waste as measured on a calendar quarter basis.

Continuous emission monitoring system or *CEMS* means a monitoring system for continuously measuring the emissions of a pollutant from an affected facility.

Dioxin/furan means total tetra- through octachlorinated dibenzo-p-dioxins and dibenzofurans.

Federally-enforceable means all limitations and conditions that are enforceable by the Administrator including the requirements of 40 CFR parts 60 and 61, requirements within any applicable State implementation plan, and any permit requirements established under 40 CFR 52.21 or under 40 CFR 51.18 and 40 CFR 51.24.

Four-hour block average or *4-hour block average* means the average of all hourly emission rates when the affected facility is operating and combusting MSW measured over 4-hour periods of time from 12 midnight to 4

a.m., 4 a.m. to 8 a.m., 8 a.m. to 12 noon, 12 noon to 4 p.m., 4 p.m. to 8 p.m., and 8 p.m. to 12 midnight.

Large municipal waste combustor plant means a municipal waste combustor plant with a municipal waste combustor aggregate plant capacity for affected facilities that is greater than 225 megagrams per day (250 tons per day) of municipal solid waste.

Mass burn refractory municipal waste combustor means a field-erected combustor that combusts municipal solid waste in a refractory wall furnace. Unless otherwise specified, this includes combustors with a cylindrical rotary refractory wall furnace.

Mass burn rotary waterwall municipal waste combustor means a field-erected combustor that combusts municipal solid waste in a cylindrical rotary waterwall furnace.

Mass burn waterwall municipal waste combustor means a field-erected combustor that combusts municipal solid waste in a waterwall furnace.

Maximum demonstrated municipal waste combustor unit load means the highest 4-hour arithmetic average municipal waste combustor unit load achieved during four consecutive hours during the most recent dioxin/furan performance test demonstrating compliance with the applicable limit for municipal waste combustor organics specified under §60.53a.

Maximum demonstrated particulate matter control device temperature means the highest 4-hour arithmetic average flue gas temperature measured at the particulate matter control device inlet during four consecutive hours during the most recent dioxin/furan performance test demonstrating compliance with the applicable limit for municipal waste combustor organics specified under §60.53a.

Modification or *modified municipal waste combustor unit* means a municipal waste combustor unit to which changes have been made if the cumulative cost of the changes, over the life of the unit, exceed 50 percent of the original cost of construction and installation of the unit (not including the cost of any land purchased in connection with such construction or installation) updated to current costs; or any physical change in the municipal waste combustor unit or change in the method of operation of the municipal waste combustor unit increases the amount of any air pollutant emitted by the unit for which standards have been established under section 129 or section 111. Increases in the amount of any air pollutant emitted by the municipal waste combustor unit are determined at 100-percent physical load capability and downstream of all air pollution control devices, with no consideration given for load restrictions based on permits or other nonphysical operational restrictions.

Modular excess air MWC means a combustor that combusts MSW and that is not field-erected and has multiple combustion chambers, all of which are designed to operate at conditions with combustion air amounts in excess of theoretical air requirements.

Modular starved air MWC means a combustor that combusts MSW and that is not field-erected and has multiple combustion chambers in which the primary combustion chamber is designed to operate at substoichiometric conditions.

Municipal solid waste or *municipal-type solid waste* or *MSW* means household, commercial/retail, and/or institutional waste. Household waste includes material discarded by single and multiple residential dwellings, hotels, motels, and other similar permanent or temporary housing establishments or facilities. Commercial/retail waste includes material discarded by stores, offices, restaurants, warehouses, nonmanufacturing activities at industrial facilities, and other similar establishments or facilities. Institutional waste includes material discarded by schools, nonmedical waste discarded by hospitals, material discarded by nonmanufacturing activities at prisons and government facilities, and material discarded by other similar establishments or facilities. Household, commercial/retail, and institutional waste does not include used oil; sewage sludge; wood pallets; construction, renovation, and demolition wastes (which includes but is not limited to railroad ties and telephone poles); clean wood; industrial process or manufacturing wastes; medical waste; or motor vehicles (including motor vehicle parts or vehicle fluff).

Household, commercial/retail, and institutional wastes include:

(1) Yard waste;

(2) Refuse-derived fuel; and

(3) Motor vehicle maintenance materials limited to vehicle batteries and tires except as specified in § 60.50a(c).

Municipal waste combustor, MWC, or *municipal waste combustor unit:* (1) Means any setting or equipment that combusts solid, liquid, or gasified MSW including, but not limited to, field-erected incinerators (with or without heat recovery), modular incinerators (starved-air or excess-air), boilers (i.e., steam-generating units), furnaces (whether suspension-fired, grate-fired, mass-fired, air curtain incinerators, or fluidized bed-fired), and pyrolysis/combustion units. Municipal waste combustors do not include pyrolysis/combustion units located at plastics/ rubber recycling units (as specified in § 60.50a(k) of this section). Municipal waste combustors do not include internal combustion engines, gas turbines, or other combustion devices that combust landfill gases collected by landfill gas collection systems.

(2) The boundaries of an MWC are defined as follows. The MWC unit includes, but is not limited to, the MSW fuel feed system, grate system, flue gas system, bottom ash system, and the combustor water system. The MWC boundary starts at the MSW pit or hopper and extends through:

(i) The combustor flue gas system, which ends immediately following the heat recovery equipment or, if there is no heat recovery equipment, immediately following the combustion chamber;

(ii) The combustor bottom ash system, which ends at the truck loading station or similar ash handling equipment that transfer the ash to final disposal, including all ash handling systems that are connected to the bottom ash handling system; and

(iii) The combustor water system, which starts at the feed water pump and ends at the piping exiting the steam drum or superheater.

(3) The MWC unit does not include air pollution control equipment, the stack, water treatment equipment, or the turbine generator set.

Municipal waste combustor plant means one or more MWC units at the same location for which construction, modification, or reconstruction is commenced after December 20, 1989 and on or before September 20, 1994.

Municipal waste combustor plant capacity means the aggregate MWC unit capacity of all MWC units at an MWC plant for which construction, modification, or reconstruction of the units commenced after December 20, 1989 and on or before September 20, 1994. Any MWC units for which construction, modification, or reconstruction is commenced on or before December 20, 1989 or after September 20, 1994 are not included for determining applicability under this subpart.

Municipal waste combustor unit capacity means the maximum design charging rate of an MWC unit expressed in megagrams per day (tons per day) of MSW combusted, calculated according to the procedures under § 60.58a(j). Municipal waste combustor unit capacity is calculated using a design heating value of 10,500 kilojoules per kilogram (4,500 British thermal units per pound) for MSW. The calculational procedures under § 60.58a(j) include procedures for determining MWC unit capacity for continuous and batch feed MWC's.

Municipal waste combustor unit load means the steam load of the MWC unit measured as specified in § 60.58a(h)(6).

MWC acid gases means all acid gases emitted in the exhaust gases from MWC units including, but not limited to, sulfur dioxide and hydrogen chloride gases.

MWC metals means metals and metal compounds emitted in the exhaust gases from MWC units.

MWC organics means organic compounds emitted in the exhaust gases from MWC units and includes total tetra- through octa-chlorinated dibenzo-p-dioxins and dibenzofurans.

Particulate matter means total particulate matter emitted from MWC units as measured by Method 5 (see § 60.58a).

Plastics/rubber recycling unit means an integrated processing unit where plastics, rubber, and/or rubber tires are the only feed materials (incidental contaminants may be included in the feed materials) and they are processed into

a chemical plant feedstock or petroleum refinery feedstock, where the feedstock is marketed to and used by a chemical plant or petroleum refinery as input feedstock. The combined weight of the chemical plant feedstock and petroleum refinery feedstock produced by the plastics/rubber recycling unit on a calendar quarter basis shall be more than 70 percent of the combined weight of the plastics, rubber, and rubber tires processed by the plastics/rubber recycling unit on a calendar quarter basis. The plastics, rubber, and/or rubber tire feed materials to the plastics/rubber recycling unit may originate from the separation or diversion of plastics, rubber, or rubber tires from MSW or industrial solid waste, and may include manufacturing scraps, trimmings, and off-specification plastics, rubber, and rubber tire discards. The plastics, rubber, and rubber tire feed materials to the plastics/rubber recycling unit may contain incidental contaminants (e.g., paper labels on plastic bottles, metal rings on plastic bottle caps, etc.).

Potential hydrogen chloride emission rate means the hydrogen chloride emission rate that would occur from combustion of MSW in the absence of any hydrogen chloride emissions control.

Potential sulfur dioxide emission rate means the sulfur dioxide emission rate that would occur from combustion of MSW in the absence of any sulfur dioxide emissions control.

Pulverized coal/refuse-derived fuel mixed fuel-fired combustor or *pulverized coal/RDF mixed fuel-fired combustor* means a combustor that fires coal and RDF simultaneously, in which pulverized coal is introduced into an air stream that carries the coal to the combustion chamber of the unit where it is fired in suspension. This includes both conventional pulverized coal and micropulverized coal.

Pyrolysis/combustion unit means a unit that produces gases, liquids, or solids through the heating of MSW, and the gases, liquids, or solids produced are combusted and emissions vented to the atmosphere.

Reconstruction means rebuilding an MWC unit for which the cumulative costs of the construction over the life of the unit exceed 50 percent of the original cost of construction and installation of the unit (not including any cost of land purchased in connection with such construction or installation) updated to current costs (current dollars).

Refractory unit or *refractory wall furnace* means a combustion unit having no energy recovery (e.g., via a waterwall) in the furnace (i.e., radiant heat transfer section) of the combustor.

Refuse-derived fuel or *RDF* means a type of MSW produced by processing MSW through shredding and size classification.

This includes all classes of RDF including low density fluff RDF through densified RDF and RDF fuel pellets.

RDF stoker means a steam generating unit that combusts RDF in a semi-suspension firing mode using air-fed distributors.

Same location means the same or contiguous property that is under common ownership or control, including properties that are separated only by a street, road, highway, or other public right-of-way. Common ownership or control includes properties that are owned, leased, or operated by the same entity, parent entity, subsidiary, subdivision, or any combination thereof, including any municipality or other governmental unit, or any quasi-governmental authority (e.g., a public utility district or regional waste disposal authority).

Shift supervisor means the person in direct charge and control of the operation of an MWC and who is responsible for on-site supervision, technical direction, management, and overall performance of the facility during an assigned shift.

Spreader stoker coal/refuse-derived fuel mixed fuel-fired combustor or *spreader stoker coal/RDF mixed fuel-fired combustor* means a combustor that fires coal and refuse-derived fuel simultaneously, in which coal is introduced to the combustion zone by a mechanism that throws the fuel onto a grate from above. Combustion takes place both in suspension and on the grate.

Standard conditions means a temperature of 20 °C (68 °F) and a pressure of 101.3 kilopascals (29.92 inches of mercury).

Twenty-four hour daily average or *24-hour daily average* means the arithmetic or geometric mean (as specified in §60.58a (e), (g), or (h) as applicable) of all hourly emission rates when the affected facility is operating and firing MSW measured over a 24-hour period between 12 midnight and the following midnight.

Untreated lumber means wood or wood products that have been cut or shaped and include wet, air-dried, and kiln-dried wood products. Untreated lumber does not include wood products that have been painted, pigment-stained, or ''pressure-treated.'' Pressure-treating compounds include, but are not limited to, chromate copper arsenate, pentachlorophenol, and creosote.

Waterwall furnace means a combustion unit having energy (heat) recovery in the furnace (i.e., radiant heat transfer section) of the combustor.

Yard waste means grass, grass clippings, bushes, shrubs, and clippings from bushes and shrubs that are generated by residential, commercial/retail, institutional, and/or industrial sources as part of maintenance activities associated with yards or other private or public lands. Yard waste does not include construction, renovation, and demolition wastes, which are exempt from the definition of MSW in this section. Yard waste does not include clean wood, which is exempt from the definition of MSW in this section.

[56 FR 5507, Feb. 11, 1991, as amended at 60 FR 65384, Dec. 19, 1995]

§60.52a Standard for municipal waste combustor metals.

(a) On and after the date on which the initial compliance test is completed or is required to be completed under §60.8, no owner or operator of an affected facility located within a large MWC plant shall cause to be discharged into the atmosphere from that affected facility any gases that contain particulate matter in excess of 34 milligrams per dry standard cubic meter (0.015 grains per dry standard cubic foot), corrected to 7 percent oxygen (dry basis).

(b) On and after the date on which the initial compliance test is completed or is required to be completed under §60.8, no owner or operator of an affected facility subject to the particulate matter emission limit under paragraph (a) of this section shall cause to be discharged into the atmosphere from that affected facility any gases that exhibit greater than 10 percent opacity (6-minute average).

(c) [Reserved]

§60.53a Standard for municipal waste combustor organics.

(a) [Reserved]

(b) On and after the date on which the initial compliance test is completed or is required to be completed under §60.8, no owner or operator of an affected facility located within a large MWC plant shall cause to be discharged into the atmosphere from that affected facility any gases that contain dioxin/furan emissions that exceed 30 nanograms per dry standard cubic meter (12 grains per billion dry standard cubic feet), corrected to 7 percent oxygen (dry basis).

§60.54a Standard for municipal waste combustor acid gases.

(a)—(b) [Reserved]

(c) On and after the date on which the initial compliance test is completed or is required to be completed under §60.8, no owner or operator of an affected facility located within a large MWC plant shall cause to be discharged into the atmosphere from that affected facility any gases that contain sulfur dioxide in excess of 20 percent of the potential sulfur dioxide emission rate (80 percent reduction by weight or volume) or 30 parts per million by volume, corrected to 7 percent oxygen (dry basis), whichever is less stringent. The averaging time is specified in §60.58a(e).

(d) On and after the date on which the initial compliance test is completed or is required to be completed under §60.8, no owner or operator of an affected facility located within a large MWC plant shall cause to be discharged into the atmosphere from that affected facility any gases that contain hydrogen chloride in excess of 5 percent of the potential hydrogen chloride emission rate (95 percent reduction by weight or volume) or 25 parts per million by volume, corrected to 7 percent

oxygen (dry basis), whichever is less stringent.

§ 60.55a Standard for nitrogen oxides.

On and after the date on which the initial compliance test is completed or is required to be completed under § 60.8, no owner or operator of an affected facility located within a large MWC plant shall cause to be discharged into the atmosphere from that affected facility any gases that contain nitrogen oxides in excess of 180 parts per million by volume, corrected to 7 percent oxygen (dry basis). The averaging time is specified under § 60.58a(g).

§ 60.56a Standards for municipal waste combustor operating practices.

(a) On and after the date on which the initial compliance test is completed or is required to be completed under § 60.8, no owner or operator of an affected facility located within a large MWC plant shall cause such facility to exceed the carbon monoxide standards shown in table 1.

TABLE 1—MWC OPERATING STANDARDS

MWC technology	Carbon monoxide emission limit (parts per million by volume)[1]
Mass burn waterwall	100
Mass burn refractory	100
Mass burn rotary waterwall	100
Modular starved air	50
Modular excess air	50
RDF stoker	150
Bubbling fluidized bed combustor	100
Circulating fluidized bed combustor	100
Pulverized coal/RDF mixed fuel-fired combustor	150
Spreader stoker coal/RDF mixed fuel-fird combustor	150

[1] Measured at the combustor outlet in conjunction with a measurement of oxygen concentration, corrected to 7 percent oxygen (dry basis). The averaging times are specified in § 60.58a(h).

(b) No owner or operator of an affected facility located within a large MWC plant shall cause such facility to operate at a load level greater than 110 percent of the *maximum demonstrated MWC unit load* as defined in § 60.51a. The averaging time is specified under § 60.58a(h).

(c) No owner or operator of an affected facility located within a large MWC plant shall cause such facility to operate at a temperature, measured at the final particulate matter control device inlet, exceeding 17 °Centigrade (30 °Fahrenheit) above the *maximum demonstrated* particulate matter control device temperature as defined in § 60.51a. The averaging time is specified under § 60.58a(h).

(d) Within 24 months from the date of start-up of an affected facility or before February 11, 1993, whichever is later, each chief facility operator and shift supervisor of an affected faciltiy located within a large MWC plant shall obtain and keep current either a provisional or operator certification in accordance with ASME QRO–1–1994 (incorporated by reference, see § 60.17) or an equivalent State-approved certification program.

(e) No owner or operator of an affected facility shall allow such affected facility located at a large MWC plant to operate at any time without a certified shift supervisor, as provided under paragraph (d) of this section, on duty at the affected facility. This requirement shall take effect 24 months after the date of start-up of the affected facility or on and after February 11, 1993, whichever is later.

(f) The owner or operator of an affected facility located within a large MWC plant shall develop and update on a yearly basis a sitespecific operating manual that shall, at a minimum, address the following elements of MWC unit operation:

(1) Summary of the applicable standards under this subpart;

(2) Description of basic combustion theory applicable to an MWC unit;

(3) Procedures for receiving, handling, and feeding MSW;

(4) MWC unit start-up, shutdown, and malfunction procedures;

(5) Procedures for maintaining proper combustion air supply levels;

(6) Procedures for operating the MWC unit within the standards established under this subpart;

(7) Procedures for responding to periodic upset or off-specification conditions;

(8) Procedures for minimizing particulate matter carryover;

(9) [Reserved]

(10) Procedures for handling ash;

(11) Procedures for monitoring MWC unit emissions; and

(12) Reporting and recordkeeping procedures.

(g) The owner or operator of an affected facility located within a large MWC plant shall establish a program for reviewing the operating manual annually with each person who has responsibilities affecting the operation of an affected facility including, but not limited to, chief facility operators, shift supervisors, control room operators, ash handlers, maintenance personnel, and crane/load handlers.

(h) The initial review of the operating manual, as specified under paragraph (g) of this section, shall be conducted prior to assumption of responsibilities affecting MWC unit operation by any person required to undergo training under paragraph (g) of this section. Subsequent reviews of the manual shall be carried out annually by each such person.

(i) The operating manual shall be kept in a readily accessible location for all persons required to undergo training under paragraph (g) of this section. The operating manual and records of training shall be available for inspection by EPA or its delegated enforcement agent upon request.

(j)—(k) [Reserved]

[56 FR 5507, Feb. 11, 1991, as amended at 60 FR 65386, Dec. 19, 1995]

§ 60.57a [Reserved]

§ 60.58a Compliance and performance testing.

(a) The standards under this subpart apply at all times, except during periods of start-up, shutdown, or malfunction; provided, however, that the duration of start-up, shutdown, or malfunction shall not exceed 3 hours per occurrence.

(1) The start-up period commences when the affected facility begins the continuous burning of MSW and does not include any warm-up period when the affected facility is combusting only a fossil fuel or other non-MSW fuel and no MSW is being combusted.

(2) Continuous burning is the continuous, semicontinuous, or batch feeding of MSW for purposes of waste disposal, energy production, or providing heat to the combustion system in preparation for waste disposal or energy production. The use of MSW solely to provide thermal protection of grate or hearth during the start-up period shall not be considered to be continuous burning.

(b) The following procedures and test methods shall be used to determine compliance with the emission limits for particulate matter under § 60.52a:

(1) Method 1 shall be used to select sampling site and number of traverse points.

(2) Method 3 shall be used for gas analysis.

(3) Method 5 shall be used for determining compliance with the particulate matter emission standard. The minimum sample volume shall be 1.7 cubic meters (60 cubic feet). The probe and filter holder heating systems in the sample train shall be set to provide a gas temperature no greater than 160°±14 °Centigrade (320°±25 °Fahrenheit). An oxygen or carbon dioxide measurement shall be obtained simultaneously with each Method 5 run.

(4) For each Method 5 run, the emission rate shall be determined using:

(i) Oxygen or carbon dioxide measurements,

(ii) Dry basis F factor, and

(iii) Dry basis emission rate calculation procedures in Method 19.

(5) An owner or operator may request that compliance be determined using carbon dioxide measurements corrected to an equivalent of 7 percent oxygen. The relationship between oxygen and carbon dioxide levels for the affected facility shall be established during the initial compliance test.

(6) The owner or operator of an affected facility shall conduct an initial compliance test for particulate matter and opacity as required under § 60.8.

(7) Method 9 shall be used for determining compliance with the opacity limit.

(8) The owner or operator of an affected facility shall install, calibrate, maintain, and operate a CEMS for measuring opacity and record the output of the system on a 6-minute average basis.

(9) Following the date the initial compliance test for particulate matter is completed or is required to be completed under § 60.8 for an affected facility located within a large MWC plant,

the owner or operator shall conduct a performance test for particulate matter on an annual basis (no more than 12 calendar months following the previous compliance test).

(10) [Reserved]

(c) [Reserved]

(d) The following procedures and test methods shall be used to determine compliance with the limits for dioxin/furan emissions under § 60.53a:

(1) Method 23 shall be used for determining compliance with the dioxin/furan emission limits. The minimum sample time shall be 4 hours per test run.

(2) The owner or operator of an affected facility shall conduct an initial compliance test for dioxin/furan emissions as required under § 60.8.

(3) Following the date of the initial compliance test or the date on which the initial compliance test is required to be completed under § 60.8, the owner or operator of an affected facility located within a large MWC plant shall conduct a performance test for dioxin/furan emissions on an annual basis (no more than 12 calendar months following the previous compliance test).

(4) [Reserved]

(5) An owner or operator may request that compliance with the dioxin/furan emissions limit be determined using carbon dioxide measurements corrected to an equivalent of 7 percent oxygen. The relationship between oxygen and carbon dioxide levels for the affected facility shall be established during the initial compliance test.

(e) The following procedures and test methods shall be used for determining compliance with the sulfur dioxide limit under § 60.54a:

(1) Method 19, section 5.4, shall be used to determine the daily geometric average percent reduction in the potential sulfur dioxide emission rate.

(2) Method 19, section 4.3, shall be used to determine the daily geometric average sulfur dioxide emission rate.

(3) An owner or operator may request that compliance with the sulfur dioxide emissions limit be determined using carbon dioxide measurements corrected to an equivalent of 7 percent oxygen. The relationship between oxygen and carbon dioxide levels for the affected facility shall be established during the initial compliance test.

(4) The owner or operator of an affected facility shall conduct an initial compliance test for sulfur dioxide as required under § 60.8. Compliance with the sulfur dioxide emission limit and percent reduction is determined by using a CEMS to measure sulfur dioxide and calculating a 24-hour daily geometric mean emission rate and daily geometric mean percent reduction using Method 19 sections 4.3 and 5.4, as applicable, except as provided under paragraph (e)(5) of this section.

(5) For batch MWC's or MWC units that do not operate continuously, compliance shall be determined using a daily geometric mean of all hourly average values for the hours during the day that the affected facility is combusting MSW.

(6) The owner or operator of an affected facility shall install, calibrate, maintain, and operate a CEMS for measuring sulfur dioxide emissions discharged to the atmosphere and record the output of the system.

(7) Following the date of the initial compliance test or the date on which the initial compliance test is required to be completed under § 60.8, compliance with the sulfur dioxide emission limit or percent reduction shall be determined based on the geometric mean of the hourly arithmetic average emission rates during each 24-hour daily period measured between 12:00 midnight and the following midnight using: CEMS inlet and outlet data, if compliance is based on a percent reduction; or CEMS outlet data only if compliance is based on an emission limit.

(8) At a minimum, valid CEMS data shall be obtained for 75 percent of the hours per day for 75 percent of the days per month the affected facility is operated and combusting MSW.

(9) The 1-hour arithmetic averages required under paragraph (e)(7) of this section shall be expressed in parts per million (dry basis) and used to calculate the 24-hour daily geometric mean emission rates. The 1-hour arithmetic averages shall be calculated using the data points required under § 60.13(e)(2). At least two data points shall be used to calculate each 1-hour arithmetic average.

(10) All valid CEMS data shall be used in calculating emission rates and percent reductions even if the minimum CEMS data requirements of paragraph (e)(8) of this Section are not met.

(11) The procedures under §60.1 3 shall be followed for installation, evaluation, and operation of the CEMS.

(12) The CEMS shall be operated according to Performance Specifications 1, 2, and 3 (appendix B of part 60).

(13) Quarterly accuracy determinations and daily calibration drift tests shall be performed in accordance with Procedure 1 (appendix F of part 60).

(14) The span value of the CEMS at the inlet to the sulfur dioxide control device is 125 percent of the maximum estimated hourly potential sulfur dioxide emissions of the MWC unit, and the span value of the CEMS at the outlet to the sulfur dioxide control device is 50 percent of the maximum estimated hourly potential sulfur dioxide emissions of the MWC unit.

(15) When sulfur dioxide emissions data are not obtained because of CEMS breakdowns, repairs, calibration checks and zero and span adjustments, emissions data shall be obtained by using other monitoring systems as approved by the Administrator or Method 19 to provide as necessary valid emission data for a minimum of 75 percent of the hours per day for 75 percent of the days per month the unit is operated and combusting MSW.

(16) Not operating a sorbent injection system for the sole purpose of testing in order to demonstrate compliance with the percent reduction standards for MWC acid gases shall not be considered a *physical change in the method of operation* under 40 CFR 52.21, or under regulations approved pursuant to 40 CFR 51.166 or 40 CFR 51.165 (a) and (b).

(f) The following procedures and test methods shall be used for determining compliance with the hydrogen chloride limits under §60.54a:

(1) The percentage reduction in the potential hydrogen chloride emissions ($\%P_{HCl}$) is computed using the following formula:

$$\%P_{HCl} = \frac{(E_i - E_o)}{E_i} \times 100$$

where:

E_i is the potential hydrogen chloride emission rate.

E_o is the hydrogen chloride emission rate measured at the outlet of the acid gas control device.

(2) Method 26 shall be used for determining the hydrogen chloride emission rate. The minimum sampling time for Method 26 shall be 1 hour.

(3) An owner or operator may request that compliance with the hydrogen chloride emissions limit be determined using carbon dioxide measurements corrected to an equivalent of 7 percent oxygen. The relationship between oxygen and carbon dioxide levels for the affected facility shall be established during the initial compliance test.

(4) The owner or operator of an affected facility shall conduct an initial compliance test for hydrogen chloride as required under §60.8.

(5) Following the date of the initial compliance test or the date on which the initial compliance test is required under §60.8, the owner or operator of an affected facility located within a large MWC plant shall conduct a performance test for hydrogen chloride on an annual basis (no more than 12 calendar months following the previous compliance test).

(6) [Reserved]

(7) Not operating a sorbent injection system for the sole purpose of testing in order to demonstrate compliance with the percent reduction standards for MWC acid gases shall not be considered a *physical change in the method of operation* under 40 CFR 52.21, or under regulations approved pursuant to 40 CFR 51.166 or 40 CFR 51.165 (a) and (b).

(g) The following procedures and test methods shall be used to determine compliance with the nitrogen oxides limit under §60.55a:

(1) Method 19, section 4.1, shall be used for determining the daily arithmetic average nitrogen oxides emission rate.

(2) An owner or operator may request that compliance with the nitrogen oxides emissions limit be determined using carbon dioxide measurements corrected to an equivalent of 7 percent oxygen. The relationship between oxygen and carbon dioxide levels for the affected facility shall be established during the initial compliance test.

(3) The owner or operator of an affected facility subject to the nitrogen oxides limit under § 60.55a shall conduct an initial compliance test for nitrogen oxides as required under § 60.8. Compliance with the nitrogen oxides emission standard shall be determined by using a CEMS for measuring nitrogen oxides and calculating a 24-hour daily arithmetic average emission rate using Method 19, section 4.1, except as specified under paragraph (g)(4) of this section.

(4) For batch MWC's or MWC's that do not operate continuously, compliance shall be determined using a daily arithmetic average of all hourly average values for the hours during the day that the affected facility is combusting MSW.

(5) The owner or operator of an affected facility subject to the nitrogen oxides emissions limit under § 60.55a shall install, calibrate, maintain, and operate a CEMS for measuring nitrogen oxides discharged to the atmosphere and record the output of the system.

(6) Following the initial compliance test or the date on which the initial compliance test is required to be completed under § 60.8, compliance with the emission limit for nitrogen oxides required under § 60.55a shall be determined based on the arithmetic average of the arithmetic average hourly emission rates during each 24-hour daily period measured between 12:00 midnight and the following midnight using CEMS data.

(7) At a minimum valid CEMS data shall be obtained for 75 percent of the hours per day for 75 percent of the days per month the affected facility is operated and combusting MSW.

(8) The 1-hour arithmetic averages required by paragraph (g)(6) of this section shall be expressed in parts per million volume (dry basis) and used to calculate the 24-hour daily arithmetic average emission rates. The 1-hour arithmetic averages shall be calculated using the data points required under § 60.13(b). At least two data points shall be used to calculate each 1-hour arithmetic average.

(9) All valid CEMS data must be used in calculating emission rates even if the minimum CEMS data requirements of paragraph (g)(7) of this section are not met.

(10) The procedures under § 60.13 shall be followed for installation, evaluation, and operation of the CEMS.

(11) Quarterly accuracy determinations and daily calibration drift tests shall be performed in accordance with Procedure 1 (appendix F of part 60).

(12) When nitrogen oxides emissions data are not obtained because of CEMS breakdowns, repairs, calibration checks, and zero and span adjustments, emission data calculations to determine compliance shall be made using other monitoring systems as approved by the Administrator or Method 19 to provide as necessary valid emission data for a minimum of 75 percent of the hours per day for 75 percent of the days per month the unit is operated and combusting MSW.

(h) The following procedures shall be used for determining compliance with the operating standards under § 60.56a:

(1) Compliance with the carbon monoxide emission limits in § 60.56a(a) shall be determined using a 4-hour block arithmetic average for all types of affected facilities except mass burn rotary waterwall MWC's, RDF stokers, and spreader stoker/RDF mixed fuel-fired combustors.

(2) For affected mass burn rotary waterwall MWC's, RDF stokers, and spreader stoker/RDF mixed fuel-fired combustors, compliance with the carbon monoxide emission limits in § 60.56a(a) shall be determined using a 24-hour daily arithmetic average.

(3) The owner or operator of an affected facility shall install, calibrate, maintain, and operate a CEMS for measuring carbon monoxide at the combustor outlet and record the output of the system.

(4) The 4-hour and 24-hour daily arithmetic averages in paragraphs (h)(1) and (2) of this section shall be calculated from 1-hour arithmetic averages expressed in parts per million by volume (dry basis). The 1-hour arithmetic averages shall be calculated using the data points generated by the CEMS. At least two data points shall be used to calculate each 1-hour arithmetic average.

(5) An owner or operator may request that compliance with the carbon monoxide emission limit be determined using carbon dioxide measurements corrected to an equivalent of 7 percent oxygen. The relationship between oxygen and carbon dioxide levels for the affected facility shall be established during the initial compliance test.

(6) The following procedures shall be used to determine compliance with load level requirements under §60.56a(b):

(i) The owner or operator of an affected facility with steam generation capability shall install, calibrate, maintain, and operate a steam flow meter or a feedwater flow meter; measure steam or feedwater flow in kilograms per hour (pounds per hour) on a continuous basis; and record the output of the monitor. Steam or feedwater flow shall be calculated in 4-hour block arithmetic averages.

(ii) The method included in ''American Society of Mechanical Engineers Power Test Codes: Test Code for Steam Generating Units, Power Test Code 4.1—1964'', Section 4 (incorporated by reference, see §60.17) shall be used for calculating the steam (or feedwater flow) required under paragraph (h)(6)(i) of this section. The recommendations of ''American Society of Mechanical Engineers Interim Supplement 19.5 on Instruments and Apparatus: Application, Part II of Fluid Meters, 6th edition (1971),'' chapter 4 (incorporated by reference, see §60.17) shall be followed for design, construction, installation, calibration, and use of nozzles and orifices except as specified in (h)(6)(iii) of this section.

(iii) Measurement devices such as flow nozzles and orifices are not required to be recalibrated after they are installed.

(iv) All signal conversion elements associated with steam (or feedwater flow) measurements must be calibrated according to the manufacturer's instructions before each dioxin/furan compliance and performance test, and at least once per year.

(v) The owner or operator of an affected facility without heat recovery shall:

(A) [Reserved]

(7) To determine compliance with the maximum particulate matter control device temperature requirements under §60.56a(c), the owner or operator of an affected facility shall install, calibrate, maintain, and operate a device for measuring temperature of the flue gas stream at the inlet to the final particulate matter control device on a continuous basis and record the output of the device. Temperature shall be calculated in 4-hour block arithmetic averages.

(8) Maximum demonstrated MWC unit load shall be determined during the initial compliance test for dioxins/furans and each subsequent performance test during which compliance with the dioxin/furan emission limit under §60.53a is achieved. Maximum demonstrated MWC unit load shall be the maximum 4-hour arithmetic average load achieved during the most recent test during which compliance with the dioxin/furan limit was achieved.

(9) The maximum demonstrated particulate matter control device temperature shall be determined during the initial compliance test for dioxins/furans and each subsequent performance test during which compliance with the dioxin/furan emission limit under §60.53a is achieved. Maximum demonstrated particulate matter control device temperature shall be the maximum 4-hour arithmetic average temperature achieved at the final particulate matter control device inlet during the most recent test during which compliance with the dioxin/furan limit was achieved.

(10) At a minimum, valid CEMS data for carbon monoxide, steam or feedwater flow, and particulate matter control device inlet temperature shall be obtained 75 percent of the hours per day for 75 percent of the days per month the affected facility is operated and combusting MSW.

(11) All valid data must be used in calculating the parameters specified under paragraph (h) of this section even if the minimum data requirements of paragraph (h)(10) of this section are not met.

(12) Quarterly accuracy determinations and daily calibration drift tests for carbon monoxide CEMS shall be

performed in accordance with Procedure 1 (appendix F).

(i) [Reserved]

(j) The following procedures shall be used for calculating *MWC unit capacity* as defined under § 60.51a:

(1) For MWC units capable of combusting MSW continuously for a 24-hour period, MWC unit capacity, in megagrams per day (tons per day) of MSW combusted, shall be calculated based on 24 hours of operation at the maximum design charging rate. The design heating values under paragraph (j)(4) of this section shall be used in calculating the design charging rate.

(2) For batch MWC units, MWC unit capacity, in megagrams per day (tons per day) of MSW combusted, shall be calculated as the maximum design amount of MSW that can be charged per batch multiplied by the maximum number of batches that could be processed in a 24-hour period. The maximum number of batches that could be processed in a 24-hour period is calculated as 24 hours divided by the design number of hours required to process one batch of MSW, and may include fractional batches.[1] The design heating values under paragraph (j)(4) of this section shall be used in calculating the MWC unit capacity in megagrams per day (tons per day) of MSW.

(3) [Reserved]

(4) The MWC unit capacity shall be calculated using a design heating value of 10,500 kilojoules per kilogram (4,500 British thermal units per pound) for all MSW.

[56 FR 5507, Feb. 11, 1991, as amended at 60 FR 65387, Dec. 19, 1995]

§ 60.59a Reporting and recordkeeping requirements.

(a) The owner or operator of an affected facility located at an MWC plant with a capacity greater than 225 megagrams per day (250 tons per day) shall provide notification of intent to construct and of planned initial startup date and the type(s) of fuels that they plan to combust in the affected facility. The MWC unit capacity and MWC plant capacity and supporting capacity calculations shall be provided at the time of the notification of construction.

(b) The owner or operator of an affected facility located within a small or large MWC plant and subject to the standards under § 60.52a, § 60.53a, § 60.54a, § 60.55a, § 60.56a, or § 60.57a shall maintain records of the following information for each affected facility for a period of at least 2 years:

(1) Calendar date.

(2) The emission rates and parameters measured using CEMS as specified under (b)(2) (i) and (ii) of this section:

(i) The following measurements shall be recorded in computer-readable format and on paper:

(A) All 6-minute average opacity levels required under § 60.58a(b).

(B) All 1 hour average sulfur dioxide emission rates at the inlet and outlet of the acid gas control device if compliance is based on a percent reduction, or at the outlet only if compliance is based on the outlet emission limit, as specified under § 60.58a(e).

(C) All 1-hour average nitrogen oxides emission rates as specified under § 60.58a(g).

(D) All 1-hour average carbon monoxide emission rates, MWC unit load measurements, and particulate matter control device inlet temperatures as specified under § 60.58a(h).

(ii) The following average rates shall be computed and recorded:

(A) All 24-hour daily geometric average percent reductions in sulfur dioxide emissions and all 24-hour daily geometric average sulfur dioxide emission rates as specified under § 60.58a(e).

(B) All 24-hour daily arithmetic average nitrogen oxides emission rates as specified under § 60.58a(g).

(C) All 4-hour block or 24-hour daily arithmetic average carbon monoxide emission rates, as applicable, as specified under § 60.58a(h).

(D) All 4-hour block arithmetic average MWC unit load levels and particulate matter control device inlet temperatures as specified under § 60.58a(h).

(3) Identification of the operating days when any of the average emission rates, percent reductions, or operating parameters specified under paragraph (b)(2)(ii) of this section or the opacity

[1] For example, if one batch requires 16 hours, then 24/16, or 1.5 batches, could be combusted in a 24-hour period.

level exceeded the applicable limits, with reasons for such exceedances as well as a description of corrective actions taken.

(4) Identification of operating days for which the minimum number of hours of sulfur dioxide or nitrogen oxides emissions or operational data (carbon monoxide emissions, unit load, particulate matter control device temperature) have not been obtained, including reasons for not obtaining sufficient data and a description of corrective actions taken.

(5) Identification of the times when sulfur dioxide or nitrogen oxides emission or operational data (carbon monoxide emissions, unit load, particulate matter control device temperature) have been excluded from the calculation of average emission rates or parameters and the reasons for excluding data.

(6) The results of daily sulfur dioxide, nitrogen oxides, and carbon monoxide CEMS drift tests and accuracy assessments as required under appendix F, Procedure 1.

(7) The results of all annual performance tests conducted to determine compliance with the particulate matter, dioxin/furan and hydrogen chloride limits. For all annual dioxin/furan tests, the maximum demonstrated MWC unit load and maximum demonstrated particulate matter control device temperature shall be recorded along with supporting calculations.

(8)—(15) [Reserved]

(c) Following the initial compliance test as required under §§ 60.8 and 60.58a, the owner or operator of an affected facility located within a large MWC plant shall submit the initial compliance test data, the performance evaluation of the CEMS using the applicable performance specifications in appendix B, and the maximum demonstrated MWC unit load and maximum demonstrated particulate matter control device temperature established during the dioxin/furan compliance test.

(d) [Reserved]

(e)(1) The owner or operator of an affected facility located within a large MWC plant shall submit annual compliance reports for sulfur dioxide, nitrogen oxide (if applicable), carbon monoxide, load level, and particulate matter control device temperature to the Administrator containing the information recorded under paragraphs (b)(1), (2)(ii), (4), (5), and (6) of this section for each pollutant or parameter. The hourly average values recorded under paragraph (b)(2)(i) of this section are not required to be included in the annual reports. Combustors firing a mixture of medical waste and other MSW shall also provide the information under paragraph (b)(15) of this section, as applicable, in each annual report. The owner or operator of an affected facility must submit reports semiannually once the affected facility is subject to permitting requirements under Title V of the Act.

(2) The owner or operator shall submit a semiannual report for any pollutant or parameter that does not comply with the pollutant or parameter limits specified in this subpart. Such report shall include the information recorded under paragraph (b)(3) of this section. For each of the dates reported, include the sulfur dioxide, nitrogen oxide, carbon monoxide, load level, and particulate matter control device temperature data, as applicable, recorded under paragraphs (b)(2)(ii)(A) through (D) of this section.

(3) Reports shall be postmarked no later than the 30th day following the end of the annual or semiannual period, as applicable.

(f)(1) The owner or operator of an affected facility located within a large MWC plant shall submit annual compliance reports, as applicable, for opacity. The annual report shall list the percent of the affected facility operating time for the reporting period that the opacity CEMS was operating and collecting valid data. Once the unit is subject to permitting requirements under Title V of the Act, the owner or operator of an affected facility must submit these reports semiannually.

(2) The owner or operator shall submit a semiannual report for all periods when the 6-minute average levels exceeded the opacity limit under § 60.52a. The semiannual report shall include all information recorded under paragraph (b)(3) of this section which pertains to opacity, and a listing of the 6-minute average opacity levels recorded under

paragraph (b)(2)(i)(A) of this section, which exceeded the opacity limit.

(3) Reports shall be postmarked no later than the 30th day following the end of the annual of semiannual period, as applicable.

(g)(1) The owner or operator of an affected facility located within a large MWC plant shall submit reports to the Administrator of all annual performance tests for particulate matter, dioxin/furan, and hydrogen chloride as recorded under paragraph (b)(7) of this section, as applicable, from the affected facility. For each annual dioxin/furan compliance test, the maximum demonstrated MWC unit load and maximum demonstrated particulate matter control device temperature shall be reported. Such reports shall be submitted when available and in no case later than the date of required submittal of the annual report specified under paragraphs (e) and (f) of this section, or within six months of the date the test was conducted, whichever is earlier.

(2) The owner or operator shall submit a report of test results which document any particulate matter, dioxin/furan, and hydrogen chloride levels that were above the applicable pollutant limit. The report shall include a copy of the test report documenting the emission levels and shall include the corrective action taken. Such reports shall be submitted when available and in no case later than the date required for submittal of any semiannual report required in paragraphs (e) or (f) of this section, or within six months of the date the test was conducted, whichever is earlier.

(h) [Reserved]

(i) Records of CEMS data for opacity, sulfur dioxide, nitrogen oxides, and carbon monoxide, load level data, and particulate matter control device temperature data shall be maintained for at least 2 years after date of recordation and be made available for inspection upon request.

(j) Records showing the names of persons who have completed review of the operating manual, including the date of the initial review and all subsequent annual reviews, shall be maintained for at least 2 years after date of review and be made available for inspection upon request.

[56 FR 5507, Feb. 11, 1991, as amended at 60 FR 65387, Dec. 19, 1995; 64 FR 7465, Feb. 12, 1999]

Subpart Eb—Standards of Performance for Large Municipal Waste Combustors for Which Construction is Commenced After September 20, 1994 or for Which Modification or Reconstruction is Commenced After June 19, 1996

SOURCE: 60 FR 65419, Dec. 19, 1995, unless otherwise noted.

§ 60.50b Applicability and delegation of authority.

(a) The affected facility to which this subpart applies is each municipal waste combustor unit with a combustion capacity greater than 250 tons per day of municipal solid waste for which construction is commenced after September 20, 1994 or for which modification or reconstruction is commenced after June 19, 1996.

(b) Any waste combustion unit that is capable of combusting more than 250 tons per day of municipal solid waste and is subject to a federally enforceable permit limiting the maximum amount of municipal solid waste that may be combusted in the unit to less than or equal to 11 tons per day is not subject to this subpart if the owner or operator:

(1) Notifies the EPA Administrator of an exemption claim;

(2) Provides a copy of the federally enforceable permit that limits the firing of municipal solid waste to less than 11 tons per day; and

(3) Keeps records of the amount of municipal solid waste fired on a daily basis.

(c) An affected facility to which this subpart applies is not subject to subpart E or Ea of this part.

(d) Physical or operational changes made to an existing municipal waste combustor unit primarily for the purpose of complying with emission guidelines under subpart Cb are not considered a modification or reconstruction

and do not result in an existing municipal waste combustor unit becoming subject to this subpart.

(e) A qualifying small power production facility, as defined in section 3(17)(C) of the Federal Power Act (16 U.S.C. 796(17)(C)), that burns homogeneous waste (such as automotive tires or used oil, but not including refuse-derived fuel) for the production of electric energy is not subject to this subpart if the owner or operator of the facility notifies the EPA Administrator of this exemption and provides data documenting that the facility qualifies for this exemption.

(f) A qualifying cogeneration facility, as defined in section 3(18)(B) of the Federal Power Act (16 U.S.C. 796(18)(B)), that burns homogeneous waste (such as automotive tires or used oil, but not including refuse-derived fuel) for the production of electric energy and steam or forms of useful energy (such as heat) that are used for industrial, commercial, heating, or cooling purposes, is not subject to this subpart if the owner or operator of the facility notifies the EPA Administrator of this exemption and provides data documenting that the facility qualifies for this exemption.

(g) Any unit combusting a single-item waste stream of tires is not subject to this subpart if the owner or operator of the unit:

(1) Notifies the EPA Administrator of an exemption claim; and

(2) [Reserved]

(3) Provides data documenting that the unit qualifies for this exemption.

(h) Any unit required to have a permit under section 3005 of the Solid Waste Disposal Act is not subject to this subpart.

(i) Any materials recovery facility (including primary or secondary smelters) that combusts waste for the primary purpose of recovering metals is not subject to this subpart.

(j) Any cofired combustor, as defined under §60.51b, that meets the capacity specifications in paragraph (a) of this section is not subject to this subpart if the owner or operator of the cofired combustor:

(1) Notifies the EPA Administrator of an exemption claim;

(2) Provides a copy of the federally enforceable permit (specified in the definition of cofired combustor in this section); and

(3) Keeps a record on a calendar quarter basis of the weight of municipal solid waste combusted at the cofired combustor and the weight of all other fuels combusted at the cofired combustor.

(k) Air curtain incinerators, as defined under §60.51b, located at a plant that meet the capacity specifications in paragraph (a) of this section and that combust a fuel stream composed of 100 percent yard waste are exempt from all provisions of this subpart except the opacity limit under §60.56b, the testing procedures under §60.58b(l), and the reporting and recordkeeping provisions under §60.59b (e) and (i).

(l) Air curtain incinerators located at plants that meet the capacity specifications in paragraph (a) of this section combusting municipal solid waste other than yard waste are subject to all provisions of this subpart.

(m) Pyrolysis/combustion units that are an integrated part of a plastics/rubber recycling unit (as defined in §60.51b) are not subject to this subpart if the owner or operator of the plastics/rubber recycling unit keeps records of the weight of plastics, rubber, and/or rubber tires processed on a calendar quarter basis; the weight of chemical plant feedstocks and petroleum refinery feedstocks produced and marketed on a calendar quarter basis; and the name and address of the purchaser of the feedstocks. The combustion of gasoline, diesel fuel, jet fuel, fuel oils, residual oil, refinery gas, petroleum coke, liquified petroleum gas, propane, or butane produced by chemical plants or petroleum refineries that use feedstocks produced by plastics/rubber recycling units are not subject to this subpart.

(n) The following authorities shall be retained by the Administrator and not transferred to a State: None.

(o) This subpart shall become effective June 19, 1996.

(p) Cement kilns firing municipal solid waste are not subject to this subpart.

[60 FR 65419, Dec. 19, 1995, as amended at 62 FR 45120, 45125, Aug. 25, 1997]

§ 60.51b Definitions.

Air curtain incinerator means an incinerator that operates by forcefully projecting a curtain of air across an open chamber or pit in which burning occurs. Incinerators of this type can be constructed above or below ground and with or without refractory walls and floor.

Batch municipal waste combustor means a municipal waste combustor unit designed so that it cannot combust municipal solid waste continuously 24 hours per day because the design does not allow waste to be fed to the unit or ash to be removed while combustion is occurring.

Bubbling fluidized bed combustor means a fluidized bed combustor in which the majority of the bed material remains in a fluidized state in the primary combustion zone.

Calendar quarter means a consecutive 3-month period (nonoverlapping) beginning on January 1, April 1, July 1, and October 1.

Calendar year means the period including 365 days starting January 1 and ending on December 31.

Chief facility operator means the person in direct charge and control of the operation of a municipal waste combustor and who is responsible for daily onsite supervision, technical direction, management, and overall performance of the facility.

Circulating fluidized bed combustor means a fluidized bed combustor in which the majority of the fluidized bed material is carried out of the primary combustion zone and is transported back to the primary zone through a recirculation loop.

Clean wood means untreated wood or untreated wood products including clean untreated lumber, tree stumps (whole or chipped), and tree limbs (whole or chipped). Clean wood does not include yard waste, which is defined elsewhere in this section, or construction, renovation, and demolition wastes (including but not limited to railroad ties and telephone poles), which are exempt from the definition of municipal solid waste in this section.

Cofired combustor means a unit combusting municipal solid waste with nonmunicipal solid waste fuel (e.g., coal, industrial process waste) and subject to a federally enforceable permit limiting the unit to combusting a fuel feed stream, 30 percent or less of the weight of which is comprised, in aggregate, of municipal solid waste as measured on a calendar quarter basis.

Continuous emission monitoring system means a monitoring system for continuously measuring the emissions of a pollutant from an affected facility.

Dioxin/furan means tetra- through octa- chlorinated dibenzo-p-dioxins and dibenzofurans.

Federally enforceable means all limitations and conditions that are enforceable by the Administrator including the requirements of 40 CFR parts 60, 61, and 63, requirements within any applicable State implementation plan, and any permit requirements established under 40 CFR 52.21 or under 40 CFR 51.18 and 40 CFR 51.24.

First calendar half means the period starting on January 1 and ending on June 30 in any year.

Four-hour block average or *4-hour block average* means the average of all hourly emission concentrations when the affected facility is operating and combusting municipal solid waste measured over 4-hour periods of time from 12:00 midnight to 4 a.m., 4 a.m. to 8 a.m., 8 a.m. to 12:00 noon, 12:00 noon to 4 p.m., 4 p.m. to 8 p.m., and 8 p.m. to 12:00 midnight.

Mass burn refractory municipal waste combustor means a field-erected combustor that combusts municipal solid waste in a refractory wall furnace. Unless otherwise specified, this includes combustors with a cylindrical rotary refractory wall furnace.

Mass burn rotary waterwall municipal waste combustor means a field-erected combustor that combusts municipal solid waste in a cylindrical rotary waterwall furnace.

Mass burn waterwall municipal waste combustor means a field-erected combustor that combusts municipal solid waste in a waterwall furnace.

Materials separation plan means a plan that identifies both a goal and an approach to separate certain components of municipal solid waste for a given service area in order to make the separated materials available for recycling. A materials separation plan may

include elements such as dropoff facilities, buy-back or deposit-return incentives, curbside pickup programs, or centralized mechanical separation systems. A materials separation plan may include different goals or approaches for different subareas in the service area, and may include no materials separation activities for certain subareas or, if warranted, an entire service area.

Maximum demonstrated municipal waste combustor unit load means the highest 4-hour arithmetic average municipal waste combustor unit load achieved during four consecutive hours during the most recent dioxin/furan performance test demonstrating compliance with the applicable limit for municipal waste combustor organics specified under § 60.52b(c).

Maximum demonstrated particulate matter control device temperature means the highest 4-hour arithmetic average flue gas temperature measured at the particulate matter control device inlet during four consecutive hours during the most recent dioxin/furan performance test demonstrating compliance with the applicable limit for municipal waste combustor organics specified under § 60.52b(c).

Modification or *modified municipal waste combustor unit* means a municipal waste combustor unit to which changes have been made after June 19, 1996 if the cumulative cost of the changes, over the life of the unit, exceed 50 percent of the original cost of construction and installation of the unit (not including the cost of any land purchased in connection with such construction or installation) updated to current costs; or any physical change in the municipal waste combustor unit or change in the method of operation of the municipal waste combustor unit increases the amount of any air pollutant emitted by the unit for which standards have been established under section 129 or section 111. Increases in the amount of any air pollutant emitted by the municipal waste combustor unit are determined at 100-percent physical load capability and downstream of all air pollution control devices, with no consideration given for load restrictions based on permits or other nonphysical operational restrictions.

Modular excess-air municipal waste combustor means a combustor that combusts municipal solid waste and that is not field-erected and has multiple combustion chambers, all of which are designed to operate at conditions with combustion air amounts in excess of theoretical air requirements.

Modular starved-air municipal waste combustor means a combustor that combusts municipal solid waste and that is not field-erected and has multiple combustion chambers in which the primary combustion chamber is designed to operate at substoichiometric conditions.

Municipal solid waste or *municipal-type solid waste* or *MSW* means household, commercial/retail, and/or institutional waste. Household waste includes material discarded by single and multiple residential dwellings, hotels, motels, and other similar permanent or temporary housing establishments or facilities. Commercial/retail waste includes material discarded by stores, offices, restaurants, warehouses, nonmanufacturing activities at industrial facilities, and other similar establishments or facilities. Institutional waste includes material discarded by schools, nonmedical waste discarded by hospitals, material discarded by nonmanufacturing activities at prisons and government facilities, and material discarded by other similar establishments or facilities. Household, commercial/retail, and institutional waste does not include used oil; sewage sludge; wood pallets; construction, renovation, and demolition wastes (which includes but is not limited to railroad ties and telephone poles); clean wood; industrial process or manufacturing wastes; medical waste; or motor vehicles (including motor vehicle parts or vehicle fluff). Household, commercial/retail, and institutional wastes include:

(1) Yard waste;

(2) Refuse-derived fuel; and

(3) Motor vehicle maintenance materials limited to vehicle batteries and tires except as specified in § 60.50b(g).

Municipal waste combustor, MWC, or *municipal waste combustor unit:* (1) Means any setting or equipment that

combusts solid, liquid, or gasified municipal solid waste including, but not limited to, field-erected incinerators (with or without heat recovery), modular incinerators (starved-air or excess-air), boilers (i.e., steam generating units), furnaces (whether suspension-fired, grate-fired, mass-fired, air curtain incinerators, or fluidized bed-fired), and pyrolysis/combustion units. Municipal waste combustors do not include pyrolysis/combustion units located at a plastics/rubber recycling unit (as specified in §60.50b(m)). Municipal waste combustors do not include cement kilns firing municipal solid waste (as specified in §60.50b(p)). Municipal waste combustors do not include internal combustion engines, gas turbines, or other combustion devices that combust landfill gases collected by landfill gas collection systems.

(2) The boundaries of a municipal solid waste combustor are defined as follows. The municipal waste combustor unit includes, but is not limited to, the municipal solid waste fuel feed system, grate system, flue gas system, bottom ash system, and the combustor water system. The municipal waste combustor boundary starts at the municipal solid waste pit or hopper and extends through:

(i) The combustor flue gas system, which ends immediately following the heat recovery equipment or, if there is no heat recovery equipment, immediately following the combustion chamber,

(ii) The combustor bottom ash system, which ends at the truck loading station or similar ash handling equipment that transfer the ash to final disposal, including all ash handling systems that are connected to the bottom ash handling system; and

(iii) The combustor water system, which starts at the feed water pump and ends at the piping exiting the steam drum or superheater.

(3) The municipal waste combustor unit does not include air pollution control equipment, the stack, water treatment equipment, or the turbine-generator set.

Municipal waste combustor acid gases means all acid gases emitted in the exhaust gases from municipal waste combustor units including, but not limited to, sulfur dioxide and hydrogen chloride gases.

Municipal waste combustor metals means metals and metal compounds emitted in the exhaust gases from municipal waste combustor units.

Municipal waste combustor organics means organic compounds emitted in the exhaust gases from municipal waste combustor units and includes tetra-through octa- chlorinated dibenzo-p-dioxins and dibenzofurans.

Municipal waste combustor plant means one or more affected facilities (as defined in §60.50b) at the same location.

Municipal waste combustor unit capacity means the maximum charging rate of a municipal waste combustor unit expressed in tons per day of municipal solid waste combusted, calculated according to the procedures under §60.58b(j). Section 60.58b(j) includes procedures for determining municipal waste combustor unit capacity for continuous and batch feed municipal waste combustors.

Municipal waste combustor unit load means the steam load of the municipal waste combustor unit measured as specified in §60.58b(i)(6).

Particulate matter means total particulate matter emitted from municipal waste combustor units as measured by EPA Reference Method 5 (see §60.58b(c)).

Plastics/rubber recycling unit means an integrated processing unit where plastics, rubber, and/or rubber tires are the only feed materials (incidental contaminants may be included in the feed materials) and they are processed into a chemical plant feedstock or petroleum refinery feedstock, where the feedstock is marketed to and used by a chemical plant or petroleum refinery as input feedstock. The combined weight of the chemical plant feedstock and petroleum refinery feedstock produced by the plastics/rubber recycling unit on a calendar quarter basis shall be more than 70 percent of the combined weight of the plastics, rubber, and rubber tires processed by the plastics/rubber recycling unit on a calendar quarter basis. The plastics, rubber, and/or rubber tire feed materials to the plastics/rubber recycling unit may

originate from the separation or diversion of plastics, rubber, or rubber tires from MSW or industrial solid waste, and may include manufacturing scraps, trimmings, and off-specification plastics, rubber, and rubber tire discards. The plastics, rubber, and rubber tire feed materials to the plastics/rubber recycling unit may contain incidental contaminants (e.g., paper labels on plastic bottles, metal rings on plastic bottle caps, etc.).

Potential hydrogen chloride emission concentration means the hydrogen chloride emission concentration that would occur from combustion of municipal solid waste in the absence of any emission controls for municipal waste combustor acid gases.

Potential mercury emission concentration means the mercury emission concentration that would occur from combustion of municipal solid waste in the absence of any mercury emissions control.

Potential sulfur dioxide emissions means the sulfur dioxide emission concentration that would occur from combustion of municipal solid waste in the absence of any emission controls for municipal waste combustor acid gases.

Pulverized coal/refuse-derived fuel mixed fuel-fired combustor means a combustor that fires coal and refuse-derived fuel simultaneously, in which pulverized coal is introduced into an air stream that carries the coal to the combustion chamber of the unit where it is fired in suspension. This includes both conventional pulverized coal and micropulverized coal.

Pyrolysis/combustion unit means a unit that produces gases, liquids, or solids through the heating of municipal solid waste, and the gases, liquids, or solids produced are combusted and emissions vented to the atmosphere.

Reconstruction means rebuilding a municipal waste combustor unit for which the reconstruction commenced after June 19, 1996, and the cumulative costs of the construction over the life of the unit exceed 50 percent of the original cost of construction and installation of the unit (not including any cost of land purchased in connection with such construction or installation) updated to current costs (current dollars).

Refractory unit or *refractory wall furnace* means a combustion unit having no energy recovery (e.g., via a waterwall) in the furnace (i.e., radiant heat transfer section) of the combustor.

Refuse-derived fuel means a type of municipal solid waste produced by processing municipal solid waste through shredding and size classification. This includes all classes of refuse-derived fuel including low-density fluff refuse-derived fuel through densified refuse-derived fuel and pelletized refuse-derived fuel.

Refuse-derived fuel stoker means a steam generating unit that combusts refuse-derived fuel in a semisuspension firing mode using air-fed distributors.

Same location means the same or contiguous property that is under common ownership or control including properties that are separated only by a street, road, highway, or other public right-of-way. Common ownership or control includes properties that are owned, leased, or operated by the same entity, parent entity, subsidiary, subdivision, or any combination thereof including any municipality or other governmental unit, or any quasi-governmental authority (e.g., a public utility district or regional waste disposal authority).

Second calendar half means the period starting July 1 and ending on December 31 in any year.

Shift supervisor means the person who is in direct charge and control of the operation of a municipal waste combustor and who is responsible for onsite supervision, technical direction, management, and overall performance of the facility during an assigned shift.

Spreader stoker coal/refuse-derived fuel mixed fuel-fired combustor means a combustor that fires coal and refuse-derived fuel simultaneously, in which coal is introduced to the combustion zone by a mechanism that throws the fuel onto a grate from above. Combustion takes place both in suspension and on the grate.

Standard conditions means a temperature of 20 °C and a pressure of 101.3 kilopascals.

Total mass dioxin/furan or *total mass* means the total mass of tetra- through octa- chlorinated dibenzo-p-dioxins and

dibenzofurans, as determined using EPA Reference Method 23 and the procedures specified under § 60.58b(g).

Twenty-four hour daily average or *24-hour daily average* means either the arithmetic mean or geometric mean (as specified) of all hourly emission concentrations when the affected facility is operating and combusting municipal solid waste measured over a 24-hour period between 12:00 midnight and the following midnight.

Untreated lumber means wood or wood products that have been cut or shaped and include wet, air-dried, and kiln-dried wood products. Untreated lumber does not include wood products that have been painted, pigment-stained, or ''pressure-treated.'' Pressure-treating compounds include, but are not limited to, chromate copper arsenate, pentachlorophenol, and creosote.

Waterwall furnace means a combustion unit having energy (heat) recovery in the furnace (i.e., radiant heat transfer section) of the combustor.

Yard waste means grass, grass clippings, bushes, shrubs, and clippings from bushes and shrubs that are generated by residential, commercial/retail, institutional, and/or industrial sources as part of maintenance activities associated with yards or other private or public lands. Yard waste does not include construction, renovation, and demolition wastes, which are exempt from the definition of municipal solid waste in this section. Yard waste does not include clean wood, which is exempt from the definition of municipal solid waste in this section.

[60 FR 65419, Dec. 19, 1995, as amended at 62 FR 45121, 45126, Aug. 25, 1997]

§ 60.52b Standards for municipal waste combustor metals, acid gases, organics, and nitrogen oxides.

(a) The limits for municipal waste combustor metals are specified in paragraphs (a)(1) through (a)(5) of this section.

(1) On and after the date on which the initial performance test is completed or is required to be completed under § 60.8 of subpart A of this part, no owner or operator of an affected facility shall cause to be discharged into the atmosphere from that affected facility any gases that contain particulate matter in excess of 24 milligrams per dry standard cubic meter, corrected to 7 percent oxygen.

(2) On and after the date on which the initial performance test is completed or is required to be completed under § 60.8 of subpart A of this part, no owner or operator of an affected facility shall cause to be discharged into the atmosphere from that affected facility any gases that exhibit greater than 10 percent opacity (6-minute average).

(3) On and after the date on which the initial performance test is completed or is required to be completed under § 60.8 of subpart A of this part, no owner or operator of an affected facility shall cause to be discharged into the atmosphere from that affected facility any gases that contain cadmium in excess of 0.020 milligrams per dry standard cubic meter, corrected to 7 percent oxygen.

(4) On and after the date on which the initial performance test is completed or is required to be completed under § 60.8 of subpart A of this part, no owner or operator of an affected facility shall cause to be discharged into the atmosphere from the affected facility any gases that contain lead in excess of 0.20 milligrams per dry standard cubic meter, corrected to 7 percent oxygen.

(5) On and after the date on which the initial performance test is completed or is required to be completed under § 60.8 of subpart A of this part, no owner or operator of an affected facility shall cause to be discharged into the atmosphere from the affected facility any gases that contain mercury in excess of 0.080 milligrams per dry standard cubic meter or 15 percent of the potential mercury emission concentration (85-percent reduction by weight), corrected to 7 percent oxygen, whichever is less stringent.

(b) The limits for municipal waste combustor acid gases are specified in paragraphs (b)(1) and (b)(2) of this section.

(1) On and after the date on which the initial performance test is completed or is required to be completed under § 60.8 of subpart A of this part, no owner or operator of an affected facility shall cause to be discharged into

the atmosphere from that affected facility any gases that contain sulfur dioxide in excess of 30 parts per million by volume or 20 percent of the potential sulfur dioxide emission concentration (80-percent reduction by weight or volume), corrected to 7 percent oxygen (dry basis), whichever is less stringent. The averaging time is specified under § 60.58b(e).

(2) On and after the date on which the initial performance test is completed or is required to be completed under § 60.8 of subpart A of this part, no owner or operator of an affected facility shall cause to be discharged into the atmosphere from that affected facility any gases that contain hydrogen chloride in excess of 25 parts per million by volume or 5 percent of the potential hydrogen chloride emission concentration (95-percent reduction by weight or volume), corrected to 7 percent oxygen (dry basis), whichever is less stringent.

(c) The limits for municipal waste combustor organics are specified in paragraphs (c)(1) and (c)(2) of this section.

(1) On and after the date on which the initial performance test is completed or is required to be completed under § 60.8 of subpart A of this part, no owner or operator of an affected facility for which construction, modification or reconstruction commences on or before November 20, 1997 shall cause to be discharged into the atmosphere from that affected facility any gases that contain dioxin/furan emissions that exceed 30 nanograms per dry standard cubic meter (total mass), corrected to 7 percent oxygen, for the first 3 years following the date of initial startup. After the first 3 years following the date of initial startup, no owner or operator shall cause to be discharged into the atmosphere from that affected facility any gases that contain dioxin/furan total mass emissions that exceed 13 nanograms per dry standard cubic meter (total mass), corrected to 7 percent oxygen.

(2) On and after the date on which the initial performance test is completed or is required to be completed under § 60.8 of subpart A of this part, no owner or operator of an affected facility for which construction, modification, or reconstruction commences after November 20, 1997 shall cause to be discharged into the atmosphere from that affected facility any gases that contain dioxin/furan total mass emissions that exceed 13 nanograms per dry standard cubic meter (total mass), corrected to 7 percent oxygen.

(d) The limits for nitrogen oxides are specified in paragraphs (d)(1) and (d)(2) of this section.

(1) During the first year of operation after the date on which the initial performance test is completed or is required to be completed under § 60.8 of subpart A of this part, no owner or operator of an affected facility shall cause to be discharged into the atmosphere from that affected facility any gases that contain nitrogen oxides in excess of 180 parts per million by volume, corrected to 7 percent oxygen (dry basis). The averaging time is specified under § 60.58b(h).

(2) After the first year of operation following the date on which the initial performance test is completed or is required to be completed under § 60.8 of subpart A of this part, no owner or operator of an affected facility shall cause to be discharged into the atmosphere from that affected facility any gases that contain nitrogen oxides in excess of 150 parts per million by volume, corrected to 7 percent oxygen (dry basis). The averaging time is specified under § 60.58b(h).

[60 FR 65419, Dec. 19, 1995, as amended at 62 FR 45121, 45126, Aug. 25, 1997]

§ 60.53b Standards for municipal waste combustor operating practices.

(a) On and after the date on which the initial performance test is completed or is required to be completed under § 60.8 of subpart A of this part, no owner or operator of an affected facility shall cause to be discharged into the atmosphere from that affected facility any gases that contain carbon monoxide in excess of the emission limits specified in table 1 of this subpart.

TABLE 1.—MUNICIPAL WASTE COMBUSTOR OPERATING STANDARDS

Municipal waste combustor technology	Carbon monoxide emission limit (parts per million by volume) [a]	Averaging time (hours) [b]
Mass burn waterwall	100	4
Mass burn refractory	100	4
Mass burn rotary waterwall	100	24
Modular starved air	50	4
Modular excess air	50	4
Refuse-derived fuel stoker	150	24
Bubbling fluidized bed combustor	100	4
Circulating fluidized bed combustor	100	4
Pulverized coal/refuse-derived fuel mixed fuel-fired combustor	150	4
Spreader stoker coal/refuse-derived fuel mixed fuel-fired combustor	150	24

[a] Measured at the combustor outlet in conjunction with a measurement of oxygen concentration, corrected to 7 percent oxygen (dry basis). The averaging times are specified in greater detail in § 60.58b(i).
[b] Averaging times are 4-hour or 24-hour block averages.

(b) No owner or operator of an affected facility shall cause such facility to operate at a load level greater than 110 percent of the maximum demonstrated municipal waste combustor unit load as defined in § 60.51b, except as specified in paragraphs (b)(1) and (b)(2) of this section. The averaging time is specified under § 60.58b(i).

(1) During the annual dioxin/furan performance test and the 2 weeks preceding the annual dioxin/furan performance test, no municipal waste combustor unit load limit is applicable.

(2) The municipal waste combustor unit load limit may be waived in accordance with permission granted by the Administrator or delegated State regulatory authority for the purpose of evaluating system performance, testing new technology or control technologies, diagnostic testing, or related activities for the purpose of improving facility performance or advancing the state-of-the-art for controlling facility emissions.

(c) No owner or operator of an affected facility shall cause such facility to operate at a temperature, measured at the particulate matter control device inlet, exceeding 17 °C above the maximum demonstrated particulate matter control device temperature as defined in § 60.51b, except as specified in paragraphs (c)(1) and (c)(2) of this section. The averaging time is specified under § 60.58b(i). The requirements specified in this paragraph apply to each particulate matter control device utilized at the affected facility.

(1) During the annual dioxin/furan performance test and the 2 weeks preceding the annual dioxin/furan performance test, no particulate matter control device temperature limitations are applicable.

(2) The particulate matter control device temperature limits may be waived in accordance with permission granted by the Administrator or delegated State regulatory authority for the purpose of evaluating system performance, testing new technology or control technologies, diagnostic testing, or related activities for the purpose of improving facility performance or advancing the state-of-the-art for controlling facility emissions.

[60 FR 65419, Dec. 19, 1995, as amended at 62 FR 45126, Aug. 25, 1997]

§ 60.54b Standards for municipal waste combustor operator training and certification.

(a) No later than the date 6 months after the date of startup of an affected facility or on December 19, 1996, whichever is later, each chief facility operator and shift supervisor shall obtain and maintain a current provisional operator certification from either the American Society of Mechanical Engineers [QRO–1–1994 (incorporated by reference—see § 60.17 of subpart A of this part)] or a State certification program.

(b) Not later than the date 6 months after the date of startup of an affected facility or on December 19, 1996, whichever is later, each chief facility operator and shift supervisor shall have completed full certification or shall

have scheduled a full certification exam with either the American Society of Mechanical Engineers [QRO–1–1994 (incorporated by reference—see § 60.17 of subpart A of this part)] or a State certification program.

(c) No owner or operator of an affected facility shall allow the facility to be operated at any time unless one of the following persons is on duty and at the affected facility: A fully certified chief facility operator, a provisionally certified chief facility operator who is scheduled to take the full certification exam according to the schedule specified in paragraph (b) of this section, a fully certified shift supervisor, or a provisionally certified shift supervisor who is scheduled to take the full certification exam according to the schedule specified in paragraph (b) of this section.

(1) The requirement specified in paragraph (c) of this section shall take effect 6 months after the date of startup of the affected facility or on December 19, 1996, whichever is later.

(2) If one of the persons listed in paragraph (c) of this section must leave the affected facility during their operating shift, a provisionally certified control room operator who is onsite at the affected facility may fulfill the requirement in paragraph (c) of this section.

(d) All chief facility operators, shift supervisors, and control room operators at affected facilities must complete the EPA or State municipal waste combustor operator training course no later than the date 6 months after the date of startup of the affected facility or by December 19, 1996, whichever is later.

(e) The owner or operator of an affected facility shall develop and update on a yearly basis a site-specific operating manual that shall, at a minimum, address the elements of municipal waste combustor unit operation specified in paragraphs (e)(1) through (e)(11) of this section.

(1) A summary of the applicable standards under this subpart;

(2) A description of basic combustion theory applicable to a municipal waste combustor unit;

(3) Procedures for receiving, handling, and feeding municipal solid waste;

(4) Municipal waste combustor unit startup, shutdown, and malfunction procedures;

(5) Procedures for maintaining proper combustion air supply levels;

(6) Procedures for operating the municipal waste combustor unit within the standards established under this subpart;

(7) Procedures for responding to periodic upset or off-specification conditions;

(8) Procedures for minimizing particulate matter carryover;

(9) Procedures for handling ash;

(10) Procedures for monitoring municipal waste combustor unit emissions; and

(11) Reporting and recordkeeping procedures.

(f) The owner or operator of an affected facility shall establish a training program to review the operating manual according to the schedule specified in paragraphs (f)(1) and (f)(2) of this section with each person who has responsibilities affecting the operation of an affected facility including, but not limited to, chief facility operators, shift supervisors, control room operators, ash handlers, maintenance personnel, and crane/load handlers.

(1) Each person specified in paragraph (f) of this section shall undergo initial training no later than the date specified in paragraph (f)(1)(i), (f)(1)(ii), or (f)(1)(iii) of this section whichever is later.

(i) The date 6 months after the date of startup of the affected facility;

(ii) The date prior to the day the person assumes responsibilities affecting municipal waste combustor unit operation; or

(iii) December 19, 1996.

(2) Annually, following the initial review required by paragraph (f)(1) of this section.

(g) The operating manual required by paragraph (e) of this section shall be kept in a readily accessible location for all persons required to undergo training under paragraph (f) of this section. The operating manual and records of

training shall be available for inspection by the EPA or its delegated enforcement agency upon request.

[60 FR 65419, Dec. 19, 1995, as amended at 62 FR 45126, Aug. 25, 1997]

§ 60.55b Standards for municipal waste combustor fugitive ash emissions.

(a) On and after the date on which the initial performance test is completed or is required to be completed under § 60.8 of subpart A of this part, no owner or operator of an affected facility shall cause to be discharged to the atmosphere visible emissions of combustion ash from an ash conveying system (including conveyor transfer points) in excess of 5 percent of the observation period (i.e., 9 minutes per 3-hour period), as determined by EPA Reference Method 22 observations as specified in § 60.58b(k), except as provided in paragraphs (b) and (c) of this section.

(b) The emission limit specified in paragraph (a) of this section does not cover visible emissions discharged inside buildings or enclosures of ash conveying systems; however, the emission limit specified in paragraph (a) of this section does cover visible emissions discharged to the atmosphere from buildings or enclosures of ash conveying systems.

(c) The provisions specified in paragraph (a) of this section do not apply during maintenance and repair of ash conveying systems.

[60 FR 65419, Dec. 19, 1995, as amended at 62 FR 45126, Aug. 25, 1997]

§ 60.56b Standards for air curtain incinerators.

On and after the date on which the initial performance test is completed or is required to be completed under § 60.8 of subpart A of this part, the owner or operator of an air curtain incinerator with the capacity to combust greater than 250 tons per day of municipal solid waste and that combusts a fuel feed stream composed of 100 percent yard waste and no other municipal solid waste materials shall at no time cause to be discharged into the atmosphere from that incinerator any gases that exhibit greater than 10-percent opacity (6-minute average), except that an opacity level of up to 35 percent (6-minute average) is permitted during startup periods during the first 30 minutes of operation of the unit.

[60 FR 65419, Dec. 19, 1995, as amended at 62 FR 45126, Aug. 25, 1997]

§ 60.57b Siting requirements.

(a) The owner or operator of an affected facility for which the initial application for a construction permit under 40 CFR part 51, subpart I, or part 52, as applicable, is submitted after December 19, 1995, shall prepare a materials separation plan, as defined in § 60.51b, for the affected facility and its service area, and shall comply with the requirements specified in paragraphs (a)(1) through (a)(10) of this section. The initial application is defined as representing a good faith submittal for complying with the requirements under 40 CFR part 51, subpart I, or part 52, as applicable, as determined by the Administrator.

(1) The owner or operator shall prepare a preliminary draft materials separation plan and shall make the plan available to the public as specified in paragraphs (a)(1)(i) and (a)(1)(ii) of this section.

(i) The owner or operator shall distribute the preliminary draft materials separation plan to the principal public libraries in the area where the affected facility is to be constructed.

(ii) The owner or operator shall publish a notification of a public meeting in the principal newspaper(s) serving the area where the affected facility is to be constructed and where the waste treated by the affected facility will primarily be collected. As a minimum, the notification shall include the information specified in paragraphs (a)(1)(ii)(A) through (a)(1)(ii)(D) of this section.

(A) The date, time, and location of the public meeting.

(B) The location of the public libraries where the preliminary draft materials separation plan may be found, including normal business hours of the libraries.

(C) An agenda of the issues to be discussed at the public meeting.

(D) The dates that the public comment period on the preliminary draft

materials separation plan begins and ends.

(2) The owner or operator shall conduct a public meeting, accept comments on the preliminary draft materials separation plan, and comply with the requirements specified in paragraphs (a)(2)(i) through (a)(2)(iv) of this section.

(i) The public meeting shall be conducted in the county where the affected facility is to be located.

(ii) The public meeting shall be scheduled to occur 30 days or more after making the preliminary draft materials separation plan available to the public as specified under paragraph (a)(1) of this section.

(iii) Suggested issues to be addressed at the public meeting are listed in paragraphs (a)(2)(iii)(A) through (a)(2)(iii)(H) of this section.

(A) The expected size of the service area for the affected facility.

(B) The amount of waste generation anticipated for the service area.

(C) The types and estimated amounts of materials proposed for separation.

(D) The methods proposed for materials separation.

(E) The amount of residual waste to be disposed.

(F) Alternate disposal methods for handling the residual waste.

(G) Identification of the location(s) where responses to public comment on the preliminary draft materials separation plan will be available for inspection, as specified in paragraphs (a)(3) and (a)(4) of this section.

(H) Identification of the locations where the final draft materials separation plan will be available for inspection, as specified in paragraph (a)(7).

(iv) Nothing in this section shall preclude an owner or operator from combining this public meeting with any other public meeting required as part of any other Federal, State, or local permit review process except the public meeting required under paragraph (b)(4) of this section.

(3) Following the public meeting required by paragraph (a)(2) of this section, the owner or operator shall prepare responses to the comments received at the public meeting.

(4) The owner or operator shall make the document summarizing responses to public comments available to the public (including distribution to the principal public libraries used to announce the meeting) in the service area where the affected facility is to be located.

(5) The owner or operator shall prepare a final draft materials separation plan for the affected facility considering the public comments received at the public meeting.

(6) As required under §60.59b(a), the owner or operator shall submit to the Administrator a copy of the notification of the public meeting, a transcript of the public meeting, the document summarizing responses to public comments, and copies of both the preliminary and final draft materials separation plans on or before the time the facility's application for a construction permit is submitted under 40 CFR part 51, subpart I, or part 52, as applicable.

(7) As part of the distribution of the siting analysis required under paragraph (b)(3) of this section, the owner or operator shall make the final draft materials separation plan required under paragraph (a)(5) of this section available to the public, as specified in paragraph (b)(3) of this section.

(8) As part of the public meeting for review of the siting analysis required under paragraph (b)(4) of this section, the owner or operator shall address questions concerning the final draft materials separation plan required by paragraph (a)(5) of this section including discussion of how the final draft materials separation plan has changed from the preliminary draft materials separation plan that was discussed at the first public meeting required by paragraph (a)(2) of this section.

(9) If the owner or operator receives any comments on the final draft materials separation plan during the public meeting required in paragraph (b)(4) of this section, the owner or operator shall respond to those comments in the document prepared in accordance with paragraph (b)(5) of this section.

(10) The owner or operator shall prepare a final materials separation plan and shall submit, as required under §60.59b(b)(5)(ii), the final materials separation plan as part of the initial notification of construction.

(b) The owner or operator of an affected facility for which the initial application for a construction permit under 40 CFR part 51, subpart I, or part 52, as applicable, is submitted after December 19, 1995 shall prepare a siting analysis in accordance with paragraphs (b)(1) and (b)(2) of this section and shall comply with the requirements specified in paragraphs (b)(3) through (b)(7) of this section.

(1) The siting analysis shall be an analysis of the impact of the affected facility on ambient air quality, visibility, soils, and vegetation.

(2) The analysis shall consider air pollution control alternatives that minimize, on a site-specific basis, to the maximum extent practicable, potential risks to the public health or the environment.

(3) The owner or operator shall make the siting analysis and final draft materials separation plan required by paragraph (a)(5) of this section available to the public as specified in paragraphs (b)(3)(i) and (b)(3)(ii) of this section.

(i) The owner or operator shall distribute the siting analysis and final draft materials separation plan to the principal public libraries in the area where the affected facility is to be constructed.

(ii) The owner or operator shall publish a notification of a public meeting in the principal newspaper(s) serving the area where the affected facility is to be constructed and where the waste treated by the affected facility will primarily be collected. As a minimum, the notification shall include the information specified in paragraphs (b)(3)(ii)(A) through (b)(3)(ii)(D) of this section.

(A) The date, time, and location of the public meeting.

(B) The location of the public libraries where the siting analyses and final draft materials separation plan may be found, including normal business hours.

(C) An agenda of the issues to be discussed at the public meeting.

(D) The dates that the public comment period on the siting analyses and final draft materials separation plan begins and ends.

(4) The owner or operator shall conduct a public meeting and accept comments on the siting analysis and the final draft materials separation plan required under paragraph (a)(5) of this section. The public meeting shall be conducted in the county where the affected facility is to be located and shall be scheduled to occur 30 days or more after making the siting analysis available to the public as specified under paragraph (b)(3) of this section.

(5) The owner or operator shall prepare responses to the comments on the siting analysis and the final draft materials separation plan that are received at the public meeting.

(6) The owner or operator shall make the document summarizing responses to public comments available to the public (including distribution to all public libraries) in the service area where the affected facility is to be located.

(7) As required under §60.59b(b)(5), the owner or operator shall submit a copy of the notification of the public meeting, a transcript of the public meeting, the document summarizing responses to public comments, and the siting analysis as part of the initial notification of construction.

(c) The owner or operator of an affected facility for which construction is commenced after September 20, 1994 shall prepare a siting analysis in accordance with 40 CFR part 51, Subpart I, or part 52, as applicable, and shall submit the siting analysis as part of the initial notification of construction. Affected facilities subject to paragraphs (a) and (b) of this section are not subject to this paragraph.

[60 FR 65419, Dec. 19, 1995, as amended at 62 FR 45126, Aug. 25, 1997]

§ 60.58b Compliance and performance testing.

(a) The provisions for startup, shutdown, and malfunction are provided in paragraphs (a)(1) and (a)(2) of this section.

(1) Except as provided by §60.56b, the standards under this subpart apply at all times except during periods of startup, shutdown, or malfunction. Duration of startup, shutdown, or malfunction periods are limited to 3 hours per occurrence.

(i) The startup period commences when the affected facility begins the continuous burning of municipal solid waste and does not include any warmup period when the affected facility is combusting fossil fuel or other nonmunicipal solid waste fuel, and no municipal solid waste is being fed to the combustor.

(ii) Continuous burning is the continuous, semicontinuous, or batch feeding of municipal solid waste for purposes of waste disposal, energy production, or providing heat to the combustion system in preparation for waste disposal or energy production. The use of municipal solid waste solely to provide thermal protection of the grate or hearth during the startup period when municipal solid waste is not being fed to the grate is not considered to be continuous burning.

(2) The opacity limits for air curtain incinerators specified in § 60.56b apply at all times as specified under § 60.56b except during periods of malfunction. Duration of malfunction periods are limited to 3 hours per occurrence.

(b) The owner or operator of an affected facility shall install, calibrate, maintain, and operate a continuous emission monitoring system and record the output of the system for measuring the oxygen or carbon dioxide content of the flue gas at each location where carbon monoxide, sulfur dioxide, or nitrogen oxides emissions are monitored and shall comply with the test procedures and test methods specified in paragraphs (b)(1) through (b)(7) of this section.

(1) The span value of the oxygen (or carbon dioxide) monitor shall be 25 percent oxygen (or carbon dioxide).

(2) The monitor shall be installed, evaluated, and operated in accordance with § 60.13 of subpart A of this part.

(3) The initial performance evaluation shall be completed no later than 180 days after the date of initial startup of the affected facility, as specified under § 60.8 of subpart A of this part.

(4) The monitor shall conform to Performance Specification 3 in appendix B of this part except for section 2.3 (relative accuracy requirement).

(5) The quality assurance procedures of appendix F of this part except for section 5.1.1 (relative accuracy test audit) shall apply to the monitor.

(6) If carbon dioxide is selected for use in diluent corrections, the relationship between oxygen and carbon dioxide levels shall be established during the initial performance test according to the procedures and methods specified in paragraphs (b)(6)(i) through (b)(6)(iv) of this section. This relationship may be reestablished during performance compliance tests.

(i) The fuel factor equation in Method 3B shall be used to determine the relationship between oxygen and carbon dioxide at a sampling location. Method 3, 3A, or 3B, as applicable, shall be used to determine the oxygen concentration at the same location as the carbon dioxide monitor.

(ii) Samples shall be taken for at least 30 minutes in each hour.

(iii) Each sample shall represent a 1-hour average.

(iv) A minimum of three runs shall be performed.

(7) The relationship between carbon dioxide and oxygen concentrations that is established in accordance with paragraph (b)(6) of this section shall be submitted to the EPA Administrator as part of the initial performance test report and, if applicable, as part of the annual test report if the relationship is reestablished during the annual performance test.

(c) The procedures and test methods specified in paragraphs (c)(1) through (c)(11) of this section shall be used to determine compliance with the emission limits for particulate matter and opacity under § 60.52b(a)(1) and (a)(2).

(1) The EPA Reference Method 1 shall be used to select sampling site and number of traverse points.

(2) The EPA Reference Method 3, 3A, or 3B, as applicable, shall be used for gas analysis.

(3) The EPA Reference Method 5 shall be used for determining compliance with the particulate matter emission limit. The minimum sample volume shall be 1.7 cubic meters. The probe and filter holder heating systems in the sample train shall be set to provide a gas temperature no greater than $160^{\pm 14}$ °C. An oxygen or carbon dioxide measurement shall be obtained simultaneously with each Method 5 run.

(4) The owner or operator of an affected facility may request that compliance with the particulate matter emission limit be determined using carbon dioxide measurements corrected to an equivalent of 7 percent oxygen. The relationship between oxygen and carbon dioxide levels for the affected facility shall be established as specified in paragraph (b)(6) of this section.

(5) As specified under § 60.8 of subpart A of this part, all performance tests shall consist of three test runs. The average of the particulate matter emission concentrations from the three test runs is used to determine compliance.

(6) In accordance with paragraphs (c)(7) and (c)(11) of this section, EPA Reference Method 9 shall be used for determining compliance with the opacity limit except as provided under § 60.11(e) of subpart A of this part.

(7) The owner or operator of an affected facility shall conduct an initial performance test for particulate matter emissions and opacity as required under § 60.8 of subpart A of this part.

(8) The owner or operator of an affected facility shall install, calibrate, maintain, and operate a continuous opacity monitoring system for measuring opacity and shall follow the methods and procedures specified in paragraphs (c)(8)(i) through (c)(8)(iv) of this section.

(i) The output of the continuous opacity monitoring system shall be recorded on a 6-minute average basis.

(ii) The continuous opacity monitoring system shall be installed, evaluated, and operated in accordance with § 60.13 of subpart A of this part.

(iii) The continuous opacity monitoring system shall conform to Performance Specification 1 in appendix B of this part.

(iv) The initial performance evaluation shall be completed no later than 180 days after the date of the initial startup of the municipal waste combustor unit, as specified under § 60.8 of subpart A of this part.

(9) Following the date that the initial performance test for particulate matter is completed or is required to be completed under § 60.8 of subpart A of this part for an affected facility, the owner or operator shall conduct a performance test for particulate matter on an annual basis (no more than 12 calendar months following the previous performance test).

(10) [Reserved]

(11) Following the date that the initial performance test for opacity is completed or is required to be completed under § 60.8 of subpart A of this part for an affected facility, the owner or operator shall conduct a performance test for opacity on an annual basis (no more than 12 calendar months following the previous performance test) using the test method specified in paragraph (c)(6) of this section.

(d) The procedures and test methods specified in paragraphs (d)(1) and (d)(2) of this section shall be used to determine compliance with the emission limits for cadmium, lead, and mercury under § 60.52b(a).

(1) The procedures and test methods specified in paragraphs (d)(1)(i) through (d)(1)(ix) of this section shall be used to determine compliance with the emission limits for cadmium and lead under § 60.52b(a) (3) and (4).

(i) The EPA Reference Method 1 shall be used for determining the location and number of sampling points.

(ii) The EPA Reference Method 3, 3A, or 3B, as applicable, shall be used for flue gas analysis.

(iii) The EPA Reference Method 29 shall be used for determining compliance with the cadmium and lead emission limits.

(iv) An oxygen or carbon dioxide measurement shall be obtained simultaneously with each Method 29 test run for cadmium and lead required under paragraph (d)(1)(iii) of this section.

(v) The owner or operator of an affected facility may request that compliance with the cadmium or lead emission limit be determined using carbon dioxide measurements corrected to an equivalent of 7 percent oxygen. The relationship between oxygen and carbon dioxide levels for the affected facility shall be established as specified in paragraph (b)(6) of this section.

(vi) All performance tests shall consist of a minimum of three test runs conducted under representative full load operating conditions. The average of the cadmium or lead emission concentrations from three test runs or

more shall be used to determine compliance.

(vii) Following the date of the initial performance test or the date on which the initial performance test is required to be completed under §60.8 of subpart A of this part, the owner or operator of an affected facility shall conduct a performance test for compliance with the emission limits for cadmium and lead on an annual basis (no more than 12 calendar months following the previous performance test).

(viii)-(ix) [Reserved]

(2) The procedures and test methods specified in paragraphs (d)(2)(i) through (d)(2)(xi) of this section shall be used to determine compliance with the mercury emission limit under §60.52b(a)(5).

(i) The EPA Reference Method 1 shall be used for determining the location and number of sampling points.

(ii) The EPA Reference Method 3, 3A, or 3B, as applicable, shall be used for flue gas analysis.

(iii) The EPA Reference Method 29 shall be used to determine the mercury emission concentration. The minimum sample volume when using Method 29 for mercury shall be 1.7 cubic meters.

(iv) An oxygen (or carbon dioxide) measurement shall be obtained simultaneously with each Method 29 test run for mercury required under paragraph (d)(2)(iii) of this section.

(v) The percent reduction in the potential mercury emissions (%PHg) is computed using equation 1:

$$\left(\%P_{Hg}\right) = \left(\frac{E_i - E_o}{E_i}\right) \times 100 \qquad (1)$$

where:

$\%P_{Hg}$ = percent reduction of the potential mercury emissions achieved.

E_i = potential mercury emission concentration measured at the control device inlet, corrected to 7 percent oxygen (dry basis).

E_o = controlled mercury emission concentration measured at the mercury control device outlet, corrected to 7 percent oxygen (dry basis).

(vi) All performance tests shall consist of a minimum of three test runs conducted under representative full load operating conditions. The average of the mercury emission concentrations or percent reductions from three test runs or more is used to determine compliance.

(vii) The owner or operator of an affected facility may request that compliance with the mercury emission limit be determined using carbon dioxide measurements corrected to an equivalent of 7 percent oxygen. The relationship between oxygen and carbon dioxide levels for the affected facility shall be established as specified in paragraph (b)(6) of this section.

(viii) The owner or operator of an affected facility shall conduct an initial performance test for mercury emissions as required under §60.8 of subpart A of this part.

(ix) Following the date that the initial performance test for mercury is completed or is required to be completed under §60.8 of subpart A of this part, the owner or operator of an affected facility shall conduct a performance test for mercury emissions on a annual basis (no more than 12 calendar months from the previous performance test).

(x) [Reserved]

(xi) The owner or operator of an affected facility where activated carbon injection is used to comply with the mercury emission limit shall follow the procedures specified in paragraph (m) of this section for measuring and calculating carbon usage.

(e) The procedures and test methods specified in paragraphs (e)(1) through (e)(14) of this section shall be used for determining compliance with the sulfur dioxide emission limit under §60.52b(b)(1).

(1) The EPA Reference Method 19, section 4.3, shall be used to calculate the daily geometric average sulfur dioxide emission concentration.

(2) The EPA Reference Method 19, section 5.4, shall be used to determine the daily geometric average percent reduction in the potential sulfur dioxide emission concentration.

(3) The owner or operator of an affected facility may request that compliance with the sulfur dioxide emission limit be determined using carbon dioxide measurements corrected to an equivalent of 7 percent oxygen. The relationship between oxygen and carbon dioxide levels for the affected facility

shall be established as specified in paragraph (b)(6) of this section.

(4) The owner or operator of an affected facility shall conduct an initial performance test for sulfur dioxide emissions as required under §60.8 of subpart A of this part. Compliance with the sulfur dioxide emission limit (concentration or percent reduction) shall be determined by using the continuous emission monitoring system specified in paragraph (e)(5) of this section to measure sulfur dioxide and calculating a 24-hour daily geometric average emission concentration or a 24-hour daily geometric average percent reduction using EPA Reference Method 19, sections 4.3 and 5.4, as applicable.

(5) The owner or operator of an affected facility shall install, calibrate, maintain, and operate a continuous emission monitoring system for measuring sulfur dioxide emissions discharged to the atmosphere and record the output of the system.

(6) Following the date that the initial performance test for sulfur dioxide is completed or is required to be completed under §60.8 of subpart A of this part, compliance with the sulfur dioxide emission limit shall be determined based on the 24-hour daily geometric average of the hourly arithmetic average emission concentrations using continuous emission monitoring system outlet data if compliance is based on an emission concentration, or continuous emission monitoring system inlet and outlet data if compliance is based on a percent reduction.

(7) At a minimum, valid continuous monitoring system hourly averages shall be obtained as specified in paragraphs (e)(7)(i) and (e)(7)(ii) for 75 percent of the operating hours per day for 90 percent of the operating days per calendar quarter that the affected facility is combusting municipal solid waste.

(i) At least two data points per hour shall be used to calculate each 1-hour arithmetic average.

(ii) Each sulfur dioxide 1-hour arithmetic average shall be corrected to 7 percent oxygen on an hourly basis using the 1-hour arithmetic average of the oxygen (or carbon dioxide) continuous emission monitoring system data.

(8) The 1-hour arithmetic averages required under paragraph (e)(6) of this section shall be expressed in parts per million corrected to 7 percent oxygen (dry basis) and used to calculate the 24-hour daily geometric average emission concentrations and daily geometric average emission percent reductions. The 1-hour arithmetic averages shall be calculated using the data points required under §60.13(e)(2) of subpart A of this part.

(9) All valid continuous emission monitoring system data shall be used in calculating average emission concentrations and percent reductions even if the minimum continuous emission monitoring system data requirements of paragraph (e)(7) of this section are not met.

(10) The procedures under §60.13 of subpart A of this part shall be followed for installation, evaluation, and operation of the continuous emission monitoring system.

(11) The initial performance evaluation shall be completed no later than 180 days after the date of initial startup of the municipal waste combustor as specified under §60.8 of subpart A of this part.

(12) The continuous emission monitoring system shall be operated according to Performance Specification 2 in appendix B of this part.

(i) During each relative accuracy test run of the continuous emission monitoring system required by Performance Specification 2 in appendix B of this part, sulfur dioxide and oxygen (or carbon dioxide) data shall be collected concurrently (or within a 30- to 60-minute period) by both the continuous emission monitors and the test methods specified in paragraphs (e)(12)(i)(A) and (e)(12)(i)(B) of this section.

(A) For sulfur dioxide, EPA Reference Method 6, 6A, or 6C shall be used.

(B) For oxygen (or carbon dioxide), EPA Reference Method 3, 3A, or 3B, as applicable shall be used.

(ii) The span value of the continuous emissions monitoring system at the inlet to the sulfur dioxide control device shall be 125 percent of the maximum estimated hourly potential sulfur dioxide emissions of the municipal waste combustor unit. The span value

of the continuous emission monitoring system at the outlet of the sulfur dioxide control device shall be 50 percent of the maximum estimated hourly potential sulfur dioxide emissions of the municipal waste combustor unit.

(13) Quarterly accuracy determinations and daily calibration drift tests shall be performed in accordance with procedure 1 in appendix F of this part.

(14) When sulfur dioxide emissions data are not obtained because of continuous emission monitoring system breakdowns, repairs, calibration checks, and zero and span adjustments, emissions data shall be obtained by using other monitoring systems as approved by the Administrator or EPA Reference Method 19 to provide, as necessary, valid emissions data for a minimum of 75 percent of the hours per day that the affected facility is operated and combusting municipal solid waste for 90 percent of the days per calendar quarter that the affected facility is operated and combusting municipal solid waste.

(f) The procedures and test methods specified in paragraphs (f)(1) through (f)(8) of this section shall be used for determining compliance with the hydrogen chloride emission limit under §60.52b(b)(2).

(1) The EPA Reference Method 26 or 26A, as applicable, shall be used to determine the hydrogen chloride emission concentration. The minimum sampling time for Method 26 shall be 1 hour.

(2) An oxygen (or carbon dioxide) measurement shall be obtained simultaneously with each Method 26 test run for hydrogen chloride required by paragraph (f)(1) of this section.

(3) The percent reduction in potential hydrogen chloride emissions (% P_{HCl}) is computed using equation 2:

$$\left(\%P_{HCl}\right) = \left(\frac{E_i - E_o}{E_i}\right) \times 100 \qquad (2)$$

where:

$\%P_{HCl}$=percent reduction of the potential hydrogen chloride emissions achieved.

E_i=potential hydrogen chloride emission concentration measured at the control device inlet, corrected to 7 percent oxygen (dry basis).

E_o=controlled hydrogen chloride emission concentration measured at the control device outlet, corrected to 7 percent oxygen (dry basis).

(4) The owner or operator of an affected facility may request that compliance with the hydrogen chloride emission limit be determined using carbon dioxide measurements corrected to an equivalent of 7 percent oxygen. The relationship between oxygen and carbon dioxide levels for the affected facility shall be established as specified in paragraph (b)(6) of this section.

(5) As specified under §60.8 of subpart A of this part, all performance tests shall consist of three test runs. The average of the hydrogen chloride emission concentrations or percent reductions from the three test runs is used to determine compliance.

(6) The owner or operator of an affected facility shall conduct an initial performance test for hydrogen chloride as required under §60.8 of subpart A of this part.

(7) Following the date that the initial performance test for hydrogen chloride is completed or is required to be completed under §60.8 of subpart A of this part, the owner or operator of an affected facility shall conduct a performance test for hydrogen chloride emissions on an annual basis (no more than 12 calendar months following the previous performance test).

(8) [Reserved]

(g) The procedures and test methods specified in paragraphs (g)(1) through (g)(9) of this section shall be used to determine compliance with the limits for dioxin/furan emissions under §60.52b(c).

(1) The EPA Reference Method 1 shall be used for determining the location and number of sampling points.

(2) The EPA Reference Method 3, 3A, or 3B, as applicable, shall be used for flue gas analysis.

(3) The EPA Reference Method 23 shall be used for determining the dioxin/furan emission concentration.

(i) The minimum sample time shall be 4 hours per test run.

(ii) An oxygen (or carbon dioxide) measurement shall be obtained simultaneously with each Method 23 test run for dioxins/furans.

(4) The owner or operator of an affected facility shall conduct an initial

performance test for dioxin/furan emissions in accordance with paragraph (g)(3) of this section, as required under § 60.8 of subpart A of this part.

(5) Following the date that the initial performance test for dioxins/furans is completed or is required to be completed under § 60.8 of subpart A of this part, the owner or operator of an affected facility shall conduct performance tests for dioxin/furan emissions in accordance with paragraph (g)(3) of this section, according to one of the schedules specified in paragraphs (g)(5)(i) through (g)(5)(iii) of this section.

(i) For affected facilities, performance tests shall be conducted on an annual basis (no more than 12 calendar months following the previous performance test.)

(ii) [Reserved]

(iii) Where all performance tests over a 2-year period indicate that dioxin/furan emissions are less than or equal to 7 nanograms per dry standard cubic meter (total mass) for all affected facilities located within a municipal waste combustor plant, the owner or operator of the municipal waste combustor plant may elect to conduct annual performance tests for one affected facility (i.e., unit) per year at the municipal waste combustor plant. At a minimum, a performance test for dioxin/furan emissions shall be conducted annually (no more than 12 months following the previous performance test) for one affected facility at the municipal waste combustor plant. Each year a different affected facility at the municipal waste combustor plant shall be tested, and the affected facilities at the plant shall be tested in sequence (e.g., unit 1, unit 2, unit 3, as applicable). If each annual performance test continues to indicate a dioxin/furan emission level less than or equal to 7 nanograms per dry standard cubic meter (total mass), the owner or operator may continue conducting a performance test on only one affected facility per year. If any annual performance test indicates a dioxin/furan emission level greater than 7 nanograms per dry standard cubic meter (total mass), performance tests thereafter shall be conducted annually on all affected facilities at the plant until and unless all annual performance tests for all affected facilities at the plant over a 2-year period indicate a dioxin/furan emission level less than or equal to 7 nanograms per dry standard cubic meter (total mass).

(6) The owner or operator of an affected facility that selects to follow the performance testing schedule specified in paragraph (g)(5)(iii) of this section shall follow the procedures specified in § 60.59b(g)(4) for reporting the selection of this schedule.

(7) The owner or operator of an affected facility where activated carbon is used to comply with the dioxin/furan emission limits specified in § 60.52b(c) or the dioxin/furan emission level specified in paragraph (g)(5)(iii) of this section shall follow the procedures specified in paragraph (m) of this section for measuring and calculating the carbon usage rate.

(8) The owner or operator of an affected facility may request that compliance with the dioxin/furan emission limit be determined using carbon dioxide measurements corrected to an equivalent of 7 percent oxygen. The relationship between oxygen and carbon dioxide levels for the affected facility shall be established as specified in paragraph (b)(6) of this section.

(9) As specified under § 60.8 of subpart A of this part, all performance tests shall consist of three test runs. The average of the dioxin/furan emission concentrations from the three test runs is used to determine compliance.

(h) The procedures and test methods specified in paragraphs (h)(1) through (h)(12) of this section shall be used to determine compliance with the nitrogen oxides emission limit for affected facilities under § 60.52b(d).

(1) The EPA Reference Method 19, section 4.1, shall be used for determining the daily arithmetic average nitrogen oxides emission concentration.

(2) The owner or operator of an affected facility may request that compliance with the nitrogen oxides emission limit be determined using carbon dioxide measurements corrected to an equivalent of 7 percent oxygen. The relationship between oxygen and carbon dioxide levels for the affected facility

shall be established as specified in paragraph (b)(6) of this section.

(3) The owner or operator of an affected facility subject to the nitrogen oxides limit under §60.52b(d) shall conduct an initial performance test for nitrogen oxides as required under §60.8 of subpart A of this part. Compliance with the nitrogen oxides emission limit shall be determined by using the continuous emission monitoring system specified in paragraph (h)(4) of this section for measuring nitrogen oxides and calculating a 24-hour daily arithmetic average emission concentration using EPA Reference Method 19, section 4.1.

(4) The owner or operator of an affected facility subject to the nitrogen oxides emission limit under §60.52b(d) shall install, calibrate, maintain, and operate a continuous emission monitoring system for measuring nitrogen oxides discharged to the atmosphere, and record the output of the system.

(5) Following the date that the initial performance test for nitrogen oxides is completed or is required to be completed under §60.8 of subpart A of this part, compliance with the emission limit for nitrogen oxides required under §60.52b(d) shall be determined based on the 24-hour daily arithmetic average of the hourly emission concentrations using continuous emission monitoring system outlet data.

(6) At a minimum, valid continuous emission monitoring system hourly averages shall be obtained as specified in paragraphs (h)(6)(i) and (h)(6)(ii) of this section for 75 percent of the operating hours per day for 90 percent of the operating days per calendar quarter that the affected facility is combusting municipal solid waste.

(i) At least 2 data points per hour shall be used to calculate each 1-hour arithmetic average.

(ii) Each nitrogen oxides 1-hour arithmetic average shall be corrected to 7 percent oxygen on an hourly basis using the 1-hour arithmetic average of the oxygen (or carbon dioxide) continuous emission monitoring system data.

(7) The 1-hour arithmetic averages required by paragraph (h)(5) of this section shall be expressed in parts per million by volume (dry basis) and used to calculate the 24-hour daily arithmetic average concentrations. The 1-hour arithmetic averages shall be calculated using the data points required under §60.13(e)(2) of subpart A of this part.

(8) All valid continuous emission monitoring system data must be used in calculating emission averages even if the minimum continuous emission monitoring system data requirements of paragraph (h)(6) of this section are not met.

(9) The procedures under §60.13 of subpart A of this part shall be followed for installation, evaluation, and operation of the continuous emission monitoring system. The initial performance evaluation shall be completed no later than 180 days after the date of initial startup of the municipal waste combustor unit, as specified under §60.8 of subpart A of this part.

(10) The owner or operator of an affected facility shall operate the continuous emission monitoring system according to Performance Specification 2 in appendix B of this part and shall follow the procedures and methods specified in paragraphs (h)(10)(i) and (h)(10)(ii) of this section.

(i) During each relative accuracy test run of the continuous emission monitoring system required by Performance Specification 2 of appendix B of this part, nitrogen oxides and oxygen (or carbon dioxide) data shall be collected concurrently (or within a 30- to 60-minute period) by both the continuous emission monitors and the test methods specified in paragraphs (h)(10)(i)(A) and (h)(10)(i)(B) of this section.

(A) For nitrogen oxides, EPA Reference Method 7, 7A, 7C, 7D, or 7E shall be used.

(B) For oxygen (or carbon dioxide), EPA Reference Method 3, 3A, or 3B, as applicable shall be used.

(ii) The span value of the continuous emission monitoring system shall be 125 percent of the maximum estimated hourly potential nitrogen oxide emissions of the municipal waste combustor unit.

(11) Quarterly accuracy determinations and daily calibration drift tests shall be performed in accordance with procedure 1 in appendix F of this part.

(12) When nitrogen oxides continuous emissions data are not obtained because of continuous emission monitoring system breakdowns, repairs,

calibration checks, and zero and span adjustments, emissions data shall be obtained using other monitoring systems as approved by the Administrator or EPA Reference Method 19 to provide, as necessary, valid emissions data for a minimum of 75 percent of the hours per day for 90 percent of the days per calendar quarter the unit is operated and combusting municipal solid waste.

(i) The procedures specified in paragraphs (i)(1) through (i)(12) of this section shall be used for determining compliance with the operating requirements under § 60.53b.

(1) Compliance with the carbon monoxide emission limits in § 60.53b(a) shall be determined using a 4-hour block arithmetic average for all types of affected facilities except mass burn rotary waterwall municipal waste combustors and refuse-derived fuel stokers.

(2) For affected mass burn rotary waterwall municipal waste combustors and refuse-derived fuel stokers, compliance with the carbon monoxide emission limits in § 60.53b(a) shall be determined using a 24-hour daily arithmetic average.

(3) The owner or operator of an affected facility shall install, calibrate, maintain, and operate a continuous emission monitoring system for measuring carbon monoxide at the combustor outlet and record the output of the system and shall follow the procedures and methods specified in paragraphs (i)(3)(i) through (i)(3)(iii) of this section.

(i) The continuous emission monitoring system shall be operated according to Performance Specification 4A in appendix B of this part.

(ii) During each relative accuracy test run of the continuous emission monitoring system required by Performance Specification 4A in appendix B of this part, carbon monoxide and oxygen (or carbon dioxide) data shall be collected concurrently (or within a 30- to 60-minute period) by both the continuous emission monitors and the test methods specified in paragraphs (i)(3)(ii)(A) and (i)(3)(ii)(B) of this section.

(A) For carbon monoxide, EPA Reference Method 10, 10A, or 10B shall be used.

(B) For oxygen (or carbon dioxide), EPA Reference Method 3, 3A, or 3B, as applicable shall be used.

(iii) The span value of the continuous emission monitoring system shall be 125 percent of the maximum estimated hourly potential carbon monoxide emissions of the municipal waste combustor unit.

(4) The 4-hour block and 24-hour daily arithmetic averages specified in paragraphs (i)(1) and (i)(2) of this section shall be calculated from 1-hour arithmetic averages expressed in parts per million by volume corrected to 7 percent oxygen (dry basis). The 1-hour arithmetic averages shall be calculated using the data points generated by the continuous emission monitoring system. At least two data points shall be used to calculate each 1-hour arithmetic average.

(5) The owner or operator of an affected facility may request that compliance with the carbon monoxide emission limit be determined using carbon dioxide measurements corrected to an equivalent of 7 percent oxygen. The relationship between oxygen and carbon dioxide levels for the affected facility shall be established as specified in paragraph (b)(6) of this section.

(6) The procedures specified in paragraphs (i)(6)(i) through (i)(6)(v) of this section shall be used to determine compliance with load level requirements under § 60.53b(b).

(i) The owner or operator of an affected facility with steam generation capability shall install, calibrate, maintain, and operate a steam flow meter or a feedwater flow meter; measure steam (or feedwater) flow in kilograms per hour (or pounds per hour) on a continuous basis; and record the output of the monitor. Steam (or feedwater) flow shall be calculated in 4-hour block arithmetic averages.

(ii) The method included in the ''American Society of Mechanical Engineers Power Test Codes: Test Code for Steam Generating Units, Power Test Code 4.1—1964 (R1991)'' section 4 (incorporated by reference, see § 60.17 of subpart A of this part) shall be used for calculating the steam (or feedwater) flow required under paragraph (i)(6)(i) of this section. The recommendations

in ''American Society of Mechanical Engineers Interim Supplement 19.5 on Instruments and Apparatus: Application, Part II of Fluid Meters, 6th edition (1971),'' chapter 4 (incorporated by reference—see §60.17 of subpart A of this part) shall be followed for design, construction, installation, calibration, and use of nozzles and orifices except as specified in (i)(6)(iii) of this section.

(iii) Measurement devices such as flow nozzles and orifices are not required to be recalibrated after they are installed.

(iv) All signal conversion elements associated with steam (or feedwater flow) measurements must be calibrated according to the manufacturer's instructions before each dioxin/furan performance test, and at least once per year.

(7) To determine compliance with the maximum particulate matter control device temperature requirements under §60.53b(c), the owner or operator of an affected facility shall install, calibrate, maintain, and operate a device for measuring on a continuous basis the temperature of the flue gas stream at the inlet to each particulate matter control device utilized by the affected facility. Temperature shall be calculated in 4-hour block arithmetic averages.

(8) The maximum demonstrated municipal waste combustor unit load shall be determined during the initial performance test for dioxins/furans and each subsequent performance test during which compliance with the dioxin/furan emission limit specified in §60.52b(c) is achieved. The maximum demonstrated municipal waste combustor unit load shall be the highest 4-hour arithmetic average load achieved during four consecutive hours during the most recent test during which compliance with the dioxin/furan emission limit was achieved.

(9) For each particulate matter control device employed at the affected facility, the maximum demonstrated particulate matter control device temperature shall be determined during the initial performance test for dioxins/furans and each subsequent performance test during which compliance with the dioxin/furan emission limit specified in §60.52b(c) is achieved. The maximum demonstrated particulate matter control device temperature shall be the highest 4-hour arithmetic average temperature achieved at the particulate matter control device inlet during four consecutive hours during the most recent test during which compliance with the dioxin/furan limit was achieved.

(10) At a minimum, valid continuous emission monitoring system hourly averages shall be obtained as specified in paragraphs (i)(10)(i) and (i)(10)(ii) of this section for 75 percent of the operating hours per day for 90 percent of the operating days per calendar quarter that the affected facility is combusting municipal solid waste.

(i) At least two data points per hour shall be used to calculate each 1-hour arithmetic average.

(ii) At a minimum, each carbon monoxide 1-hour arithmetic average shall be corrected to 7 percent oxygen on an hourly basis using the 1-hour arithmetic average of the oxygen (or carbon dioxide) continuous emission monitoring system data.

(11) All valid continuous emission monitoring system data must be used in calculating the parameters specified under paragraph (i) of this section even if the minimum data requirements of paragraph (i)(10) of this section are not met. When carbon monoxide continuous emission data are not obtained because of continuous emission monitoring system breakdowns, repairs, calibration checks, and zero and span adjustments, emissions data shall be obtained using other monitoring systems as approved by the Administrator or EPA Reference Method 10 to provide, as necessary, the minimum valid emission data.

(12) Quarterly accuracy determinations and daily calibration drift tests for the carbon monoxide continuous emission monitoring system shall be performed in accordance with procedure 1 in appendix F of this part.

(j) The procedures specified in paragraphs (j)(1) and (j)(2) of this section shall be used for calculating municipal waste combustor unit capacity as defined under §60.51b.

(1) For municipal waste combustor units capable of combusting municipal solid waste continuously for a 24-hour

period, municipal waste combustor unit capacity shall be calculated based on 24 hours of operation at the maximum charging rate. The maximum charging rate shall be determined as specified in paragraphs (j)(1)(i) and (j)(1)(ii) of this section as applicable.

(i) For combustors that are designed based on heat capacity, the maximum charging rate shall be calculated based on the maximum design heat input capacity of the unit and a heating value of 12,800 kilojoules per kilogram for combustors firing refuse-derived fuel and a heating value of 10,500 kilojoules per kilogram for combustors firing municipal solid waste that is not refuse-derived fuel.

(ii) For combustors that are not designed based on heat capacity, the maximum charging rate shall be the maximum design charging rate.

(2) For batch feed municipal waste combustor units, municipal waste combustor unit capacity shall be calculated as the maximum design amount of municipal solid waste that can be charged per batch multiplied by the maximum number of batches that could be processed in a 24-hour period. The maximum number of batches that could be processed in a 24-hour period is calculated as 24 hours divided by the design number of hours required to process one batch of municipal solid waste, and may include fractional batches (e.g., if one batch requires 16 hours, then 24/16, or 1.5 batches, could be combusted in a 24-hour period). For batch combustors that are designed based on heat capacity, the design heating value of 12,800 kilojoules per kilogram for combustors firing refuse-derived fuel and a heating value of 10,500 kilojoules per kilogram for combustors firing municipal solid waste that is not refuse-derived fuel shall be used in calculating the municipal waste combustor unit capacity in megagrams per day of municipal solid waste.

(k) The procedures specified in paragraphs (k)(1) through (k)(4) of this section shall be used for determining compliance with the fugitive ash emission limit under §60.55b.

(1) The EPA Reference Method 22 shall be used for determining compliance with the fugitive ash emission limit under §60.55b. The minimum observation time shall be a series of three 1-hour observations. The observation period shall include times when the facility is transferring ash from the municipal waste combustor unit to the area where ash is stored or loaded into containers or trucks.

(2) The average duration of visible emissions per hour shall be calculated from the three 1-hour observations. The average shall be used to determine compliance with §60.55b.

(3) The owner or operator of an affected facility shall conduct an initial performance test for fugitive ash emissions as required under §60.8 of subpart A of this part.

(4) Following the date that the initial performance test for fugitive ash emissions is completed or is required to be completed under §60.8 of subpart A of this part for an affected facility, the owner or operator shall conduct a performance test for fugitive ash emissions on an annual basis (no more than 12 calendar months following the previous performance test).

(l) The procedures specified in paragraphs (l)(1) through (l)(3) of this section shall be used to determine compliance with the opacity limit for air curtain incinerators under §60.56b.

(1) The EPA Reference Method 9 shall be used for determining compliance with the opacity limit.

(2) The owner or operator of the air curtain incinerator shall conduct an initial performance test for opacity as required under §60.8 of subpart A of this part.

(3) Following the date that the initial performance test is completed or is required to be completed under §60.8 of subpart A of this part, the owner or operator of the air curtain incinerator shall conduct a performance test for opacity on an annual basis (no more than 12 calendar months following the previous performance test).

(m) The owner or operator of an affected facility where activated carbon injection is used to comply with the mercury emission limit under §60.52b(a)(5), or the dioxin/furan emission limits under §60.52(b)(c), or the dioxin/furan emission level specified in

§ 60.58b(g)(5)(iii) shall follow the procedures specified in paragraphs (m)(1) through (m)(3) of this section.

(1) During the performance tests for dioxins/furans and mercury, as applicable, the owner or operator shall estimate an average carbon mass feed rate based on carbon injection system operating parameters such as the screw feeder speed, hopper volume, hopper refill frequency, or other parameters appropriate to the feed system being employed, as specified in paragraphs (m)(1)(i) and (m)(1)(ii) of this section.

(i) An average carbon mass feed rate in kilograms per hour or pounds per hour shall be estimated during the initial performance test for mercury emissions and each subsequent performance test for mercury emissions.

(ii) An average carbon mass feed rate in kilograms per hour or pounds per hour shall be estimated during the initial performance test for dioxin/furan emissions and each subsequent performance test for dioxin/furan emissions.

(2) During operation of the affected facility, the carbon injection system operating parameter(s) that are the primary indicator(s) of the carbon mass feed rate (e.g., screw feeder setting) must equal or exceed the level(s) documented during the performance tests specified under paragraphs (m)(1)(i) and (m)(1)(ii) of this section.

(3) The owner or operator of an affected facility shall estimate the total carbon usage of the plant (kilograms or pounds) for each calendar quarter by two independent methods, according to the procedures in paragraphs (m)(3)(i) and (m)(3)(ii) of this section.

(i) The weight of carbon delivered to the plant.

(ii) Estimate the average carbon mass feed rate in kilograms per hour or pounds per hour for each hour of operation for each affected facility based on the parameters specified under paragraph (m)(1) of this section, and sum the results for all affected facilities at the plant for the total number of hours of operation during the calendar quarter.

[60 FR 65419, Dec. 19, 1995, as amended at 62 FR 45126, Aug. 25, 1997]

§ 60.59b Reporting and recordkeeping requirements.

(a) The owner or operator of an affected facility with a capacity to combust greater than 250 tons per day shall submit, on or before the date the application for a construction permit is submitted under 40 CFR part 51, subpart I, or part 52, as applicable, the items specified in paragraphs (a)(1) through (a)(4) of this section.

(1) The preliminary and final draft materials separation plans required by § 60.57b(a)(1) and (a)(5).

(2) A copy of the notification of the public meeting required by § 60.57b(a)(1)(ii).

(3) A transcript of the public meeting required by § 60.57b(a)(2).

(4) A copy of the document summarizing responses to public comments required by § 60.57b(a)(3).

(b) The owner or operator of an affected facility with a capacity to combust greater than 250 tons per day shall submit a notification of construction, which includes the information specified in paragraphs (b)(1) through (b)(5) of this section.

(1) Intent to construct.

(2) Planned initial startup date.

(3) The types of fuels that the owner or operator plans to combust in the affected facility.

(4) The municipal waste combustor unit capacity, and supporting capacity calculations prepared in accordance with § 60.58b(j).

(5) Documents associated with the siting requirements under § 60.57b (a) and (b), as specified in paragraphs (b)(5)(i) through (b)(5)(v) of this section.

(i) The siting analysis required by § 60.57b (b)(1) and (b)(2).

(ii) The final materials separation plan for the affected facility required by § 60.57b(a)(10).

(iii) A copy of the notification of the public meeting required by § 60.57b(b)(3)(ii).

(iv) A transcript of the public meeting required by § 60.57b(b)(4).

(v) A copy of the document summarizing responses to public comments required by § 60.57b (a)(9) and (b)(5).

(c) The owner or operator of an air curtain incinerator subject to the opacity limit under § 60.56b shall provide a

notification of construction that includes the information specified in paragraphs (b)(1) through (b)(4) of this section.

(d) The owner or operator of an affected facility subject to the standards under §§60.52b, 60.53b, 60.54b, 60.55b, and 60.57b shall maintain records of the information specified in paragraphs (d)(1) through (d)(15) of this section, as applicable, for each affected facility for a period of at least 5 years.

(1) The calendar date of each record.

(2) The emission concentrations and parameters measured using continuous monitoring systems as specified under paragraphs (d)(2)(i) and (d)(2)(ii) of this section.

(i) The measurements specified in paragraphs (d)(2)(i)(A) through (d)(2)(i)(D) of this section shall be recorded and be available for submittal to the Administrator or review onsite by an inspector.

(A) All 6-minute average opacity levels as specified under §60.58b(c).

(B) All 1-hour average sulfur dioxide emission concentrations as specified under §60.58b(e).

(C) All 1-hour average nitrogen oxides emission concentrations as specified under §60.58b(h).

(D) All 1-hour average carbon monoxide emission concentrations, municipal waste combustor unit load measurements, and particulate matter control device inlet temperatures as specified under §60.58b(i).

(ii) The average concentrations and percent reductions, as applicable, specified in paragraphs (d)(2)(ii)(A) through (d)(2)(ii)(D) of this section shall be computed and recorded, and shall be available for submittal to the Administrator or review on-site by an inspector.

(A) All 24-hour daily geometric average sulfur dioxide emission concentrations and all 24-hour daily geometric average percent reductions in sulfur dioxide emissions as specified under §60.58b(e).

(B) All 24-hour daily arithmetic average nitrogen oxides emission concentrations as specified under §60.58b(h).

(C) All 4-hour block or 24-hour daily arithmetic average carbon monoxide emission concentrations, as applicable, as specified under §60.58b(i).

(D) All 4-hour block arithmetic average municipal waste combustor unit load levels and particulate matter control device inlet temperatures as specified under §60.58b(i).

(3) Identification of the calendar dates when any of the average emission concentrations, percent reductions, or operating parameters recorded under paragraphs (d)(2)(ii)(A) through (d)(2)(ii)(D) of this section, or the opacity levels recorded under paragraph (d)(2)(i)(A) of this section are above the applicable limits, with reasons for such exceedances and a description of corrective actions taken.

(4) For affected facilities that apply activated carbon for mercury or dioxin/furan control, the records specified in paragraphs (d)(4)(i) through (d)(4)(v) of this section.

(i) The average carbon mass feed rate (in kilograms per hour or pounds per hour) estimated as required under §60.58b(m)(1)(i) of this section during the initial mercury performance test and all subsequent annual performance tests, with supporting calculations.

(ii) The average carbon mass feed rate (in kilograms per hour or pounds per hour) estimated as required under §60.58b(m)(1)(ii) of this section during the initial dioxin/furan performance test and all subsequent annual performance tests, with supporting calculations.

(iii) The average carbon mass feed rate (in kilograms per hour or pounds per hour) estimated for each hour of operation as required under §60.58b(m)(3)(ii) of this section, with supporting calculations.

(iv) The total carbon usage for each calendar quarter estimated as specified by paragraph 60.58b(m)(3) of this section, with supporting calculations.

(v) Carbon injection system operating parameter data for the parameter(s) that are the primary indicator(s) of carbon feed rate (e.g., screw feeder speed).

(5) [Reserved]

(6) Identification of the calendar dates for which the minimum number of hours of any of the data specified in paragraphs (d)(6)(i) through (d)(6)(v) of

this section have not been obtained including reasons for not obtaining sufficient data and a description of corrective actions taken.

(i) Sulfur dioxide emissions data;

(ii) Nitrogen oxides emissions data;

(iii) Carbon monoxide emissions data;

(iv) Municipal waste combustor unit load data; and

(v) Particulate matter control device temperature data.

(7) Identification of each occurrence that sulfur dioxide emissions data, nitrogen oxides emissions data (large municipal waste combustors only), or operational data (i.e., carbon monoxide emissions, unit load, and particulate matter control device temperature) have been excluded from the calculation of average emission concentrations or parameters, and the reasons for excluding the data.

(8) The results of daily drift tests and quarterly accuracy determinations for sulfur dioxide, nitrogen oxides, and carbon monoxide continuous emission monitoring systems, as required under appendix F of this part, procedure 1.

(9) The test reports documenting the results of the initial performance test and all annual performance tests listed in paragraphs (d)(9)(i) and (d)(9)(ii) of this section shall be recorded along with supporting calculations.

(i) The results of the initial performance test and all annual performance tests conducted to determine compliance with the particulate matter, opacity, cadmium, lead, mercury, dioxins/furans, hydrogen chloride, and fugitive ash emission limits.

(ii) For the initial dioxin/furan performance test and all subsequent dioxin/furan performance tests recorded under paragraph (d)(9)(i) of this section, the maximum demonstrated municipal waste combustor unit load and maximum demonstrated particulate matter control device temperature (for each particulate matter control device).

(10) [Reserved]

(11) For each affected facility subject to the siting provisions under §60.57b, the siting analysis, the final materials separation plan, a record of the location and date of the public meetings, and the documentation of the responses to public comments received at the public meetings.

(12) The records specified in paragraphs (d)(12)(i) through (d)(12)(iii) of this section.

(i) Records showing the names of the municipal waste combustor chief facility operator, shift supervisors, and control room operators who have been provisionally certified by the American Society of Mechanical Engineers or an equivalent State-approved certification program as required by §60.54b(a) including the dates of initial and renewal certifications and documentation of current certification.

(ii) Records showing the names of the municipal waste combustor chief facility operator, shift supervisors, and control room operators who have been fully certified by the American Society of Mechanical Engineers or an equivalent State-approved certification program as required by §60.54b(b) including the dates of initial and renewal certifications and documentation of current certification.

(iii) Records showing the names of the municipal waste combustor chief facility operator, shift supervisors, and control room operators who have completed the EPA municipal waste combustor operator training course or a State-approved equivalent course as required by §60.54b(d) including documentation of training completion.

(13) Records showing the names of persons who have completed a review of the operating manual as required by §60.54b(f) including the date of the initial review and subsequent annual reviews.

(14) For affected facilities that apply activated carbon for mercury or dioxin/furan control, identification of the calendar dates when the average carbon mass feed rates recorded under (d)(4)(iii) of this section were less than either of the hourly carbon feed rates estimated during performance tests for mercury or dioxin/furan emissions and recorded under paragraphs (d)(4)(i) and (d)(4)(ii) of this section, respectively, with reasons for such feed rates and a description of corrective actions taken.

(15) For affected facilities that apply activated carbon for mercury or dioxin/furan control, identification of the calendar dates when the carbon injection

system operating parameter(s) that are the primary indicator(s) of carbon mass feed rate (e.g., screw feeder speed) recorded under paragraph (d)(4)(v) of this section are below the level(s) estimated during the performance tests as specified in §60.58b(m)(1)(i) and §60.58b(m)(1)(ii) of this section, with reasons for such occurrences and a description of corrective actions taken.

(e) The owner or operator of an air curtain incinerator subject to the opacity limit under §60.56b shall maintain records of results of the initial opacity performance test and subsequent performance tests required by §60.58b(l) for a period of at least 5 years.

(f) The owner or operator of an affected facility shall submit the information specified in paragraphs (f)(1) through (f)(6) of this section in the initial performance test report.

(1) The initial performance test data as recorded under paragraphs (d)(2)(ii)(A) through (d)(2)(ii)(D) of this section for the initial performance test for sulfur dioxide, nitrogen oxides, carbon monoxide, municipal waste combustor unit load level, and particulate matter control device inlet temperature.

(2) The test report documenting the initial performance test recorded under paragraph (d)(9) of this section for particulate matter, opacity, cadmium, lead, mercury, dioxins/furans, hydrogen chloride, and fugitive ash emissions.

(3) The performance evaluation of the continuous emission monitoring system using the applicable performance specifications in appendix B of this part.

(4) The maximum demonstrated municipal waste combustor unit load and maximum demonstrated particulate matter control device inlet temperature(s) established during the initial dioxin/furan performance test as recorded under paragraph (d)(9) of this section.

(5) For affected facilities that apply activated carbon injection for mercury control, the owner or operator shall submit the average carbon mass feed rate recorded under paragraph (d)(4)(i) of this section.

(6) For those affected facilities that apply activated carbon injection for dioxin/furan control, the owner or operator shall submit the average carbon mass feed rate recorded under paragraph (d)(4)(ii) of this section.

(g) Following the first year of municipal combustor operation, the owner or operator of an affected facility shall submit an annual report including the information specified in paragraphs (g)(1) through (g)(4) of this section, as applicable, no later than February 1 of each year following the calendar year in which the data were collected (once the unit is subject to permitting requirements under Title V of the Act, the owner or operator of an affected facility must submit these reports semiannually).

(1) A summary of data collected for all pollutants and parameters regulated under this subpart, which includes the information specified in paragraphs (g)(1)(i) through (g)(1)(v) of this section.

(i) A list of the particulate matter, opacity, cadmium, lead, mercury, dioxins/furans, hydrogen chloride, and fugitive ash emission levels achieved during the performance tests recorded under paragraph (d)(9) of this section.

(ii) A list of the highest emission level recorded for sulfur dioxide, nitrogen oxides, carbon monoxide, municipal waste combustor unit load level, and particulate matter control device inlet temperature based on the data recorded under paragraphs (d)(2)(ii)(A) through (d)(2)(ii)(D) of this section.

(iii) List the highest opacity level measured, based on the data recorded under paragraph (d)(2)(i)(A) of this section.

(iv) The total number of days that the minimum number of hours of data for sulfur dioxide, nitrogen oxides, carbon monoxide, municipal waste combustor unit load, and particulate matter control device temperature data were not obtained based on the data recorded under paragraph (d)(6) of this section.

(v) The total number of hours that data for sulfur dioxide, nitrogen oxides, carbon monoxide, municipal waste combustor unit load, and particulate matter control device temperature were excluded from the calculation of average emission concentrations or parameters based on the data recorded under paragraph (d)(7) of this section.

(2) The summary of data reported under paragraph (g)(1) of this section shall also provide the types of data specified in paragraphs (g)(1)(i) through (g)(1)(vi) of this section for the calendar year preceding the year being reported, in order to provide the Administrator with a summary of the performance of the affected facility over a 2-year period.

(3) The summary of data including the information specified in paragraphs (g)(1) and (g)(2) of this section shall highlight any emission or parameter levels that did not achieve the emission or parameter limits specified under this subpart.

(4) A notification of intent to begin the reduced dioxin/furan performance testing schedule specified in §60.58b(g)(5)(iii) of this section during the following calendar year.

(h) The owner or operator of an affected facility shall submit a semiannual report that includes the information specified in paragraphs (h)(1) through (h)(5) of this section for any recorded pollutant or parameter that does not comply with the pollutant or parameter limit specified under this subpart, according to the schedule specified under paragraph (h)(6) of this section.

(1) The semiannual report shall include information recorded under paragraph (d)(3) of this section for sulfur dioxide, nitrogen oxides, carbon monoxide, municipal waste combustor unit load level, particulate matter control device inlet temperature, and opacity.

(2) For each date recorded as required by paragraph (d)(3) of this section and reported as required by paragraph (h)(1) of this section, the semiannual report shall include the sulfur dioxide, nitrogen oxides, carbon monoxide, municipal waste combustor unit load level, particulate matter control device inlet temperature, or opacity data, as applicable, recorded under paragraphs (d)(2)(ii)(A) through (d)(2)(ii)(D) and (d)(2)(i)(A) of this section, as applicable.

(3) If the test reports recorded under paragraph (d)(9) of this section document any particulate matter, opacity, cadmium, lead, mercury, dioxins/furans, hydrogen chloride, and fugitive ash emission levels that were above the applicable pollutant limits, the semiannual report shall include a copy of the test report documenting the emission levels and the corrective actions taken.

(4) The semiannual report shall include the information recorded under paragraph (d)(15) of this section for the carbon injection system operating parameter(s) that are the primary indicator(s) of carbon mass feed rate.

(5) For each operating date reported as required by paragraph (h)(4) of this section, the semiannual report shall include the carbon feed rate data recorded under paragraph (d)(4)(iii) of this section.

(6) Semiannual reports required by paragraph (h) of this section shall be submitted according to the schedule specified in paragraphs (h)(6)(i) and (h)(6)(ii) of this section.

(i) If the data reported in accordance with paragraphs (h)(1) through (h)(5) of this section were collected during the first calendar half, then the report shall be submitted by August 1 following the first calendar half.

(ii) If the data reported in accordance with paragraphs (h)(1) through (h)(5) of this section were collected during the second calendar half, then the report shall be submitted by February 1 following the second calendar half.

(i) The owner or operator of an air curtain incinerator subject to the opacity limit under §60.56b shall submit the results of the initial opacity performance test and all subsequent annual performance tests recorded under paragraph (e) of this section. Annual performance tests shall be submitted by February 1 of the year following the year of the performance test.

(j) All reports specified under paragraphs (a), (b), (c), (f), (g), (h), and (i) of this section shall be submitted as a paper copy, postmarked on or before the submittal dates specified under these paragraphs, and maintained onsite as a paper copy for a period of 5 years.

(k) All records specified under paragraphs (d) and (e) of this section shall be maintained onsite in either paper copy or computer-readable format, unless an alternative format is approved by the Administrator.

(l) If the owner or operator of an affected facility would prefer a different annual or semiannual date for submitting the periodic reports required by paragraphs (g), (h) and (i) of this section, then the dates may be changed by mutual agreement between the owner or operator and the Administrator according to the procedures specified in §60.19(c) of subpart A of this part.

[60 FR 65419, Dec. 19, 1995, as amended at 62 FR 45121, 45127, Aug. 25, 1997]

Subpart Ec—Standards of Performance for Hospital/Medical/Infectious Waste Incinerators for Which Construction is Commenced After June 20, 1996

SOURCE: 62 FR 48382, Sept. 15, 1997, unless otherwise noted.

§60.50c Applicability and delegation of authority.

(a) Except as provided in paragraphs (b) through (h) of this section, the affected facility to which this subpart applies is each individual hospital/medical/infectious waste incinerator (HMIWI) for which construction is commenced after June 20, 1996 or for which modification is commenced after March 16, 1998.

(b) A combustor is not subject to this subpart during periods when only pathological waste, low-level radioactive waste, and/or chemotherapeutic waste (all defined in §60.51c) is burned, provided the owner or operator of the combustor:

(1) Notifies the Administrator of an exemption claim; and

(2) Keeps records on a calendar quarter basis of the periods of time when only pathological waste, low-level radioactivewaste and/or chemotherapeutic waste is burned.

(c) Any co-fired combustor (defined in §60.51c) is not subject to this subpart if the owner or operator of the co-fired combustor:

(1) Notifies the Administrator of an exemption claim;

(2) Provides an estimate of the relative amounts of hospital waste, medical/infectious waste, and other fuels and wastes to be combusted; and

(3) Keeps records on a calendar quarter basis of the weight of hospital waste and medical/infectious waste combusted, and the weight of all other fuels and wastes combusted at the co-fired combustor.

(d) Any combustor required to have a permit under section 3005 of the Solid Waste Disposal Act is not subject to this subpart.

(e) Any combustor which meets the applicability requirements under subpart Cb, Ea, or Eb of this part (standards or guidelines for certain municipal waste combustors) is not subject to this subpart.

(f) Any pyrolysis unit (defined in §60.51c) is not subject to this subpart.

(g) Cement kilns firing hospital waste and/or medical/infectious waste are not subject to this subpart.

(h) Physical or operational changes made to an existing HMIWI solely for the purpose of complying with emission guidelines under subpart Ce are not considered a modification and do not result in an existing HMIWI becoming subject to this subpart.

(i) In delegating implementation and enforcement authority to a State under section 111(c) of the Clean Air Act, the following authorities shall be retained by the Administrator and not transferred to a State:

(1) The requirements of §60.56c(i) establishing operating parameters when using controls other than those listed in §60.56c(d).

(2) Alternative methods of demonstrating compliance under §60.8.

(j) Affected facilities subject to this subpart are not subject to the requirements of 40 CFR part 64.

(k) The requirements of this subpart shall become effective March 16, 1998

(l) Beginning September 15, 2000, or on the effective date of an EPA-approved operating permit program under Clean Air Act title V and the implementing regulations under 40 CFR part 70 in the State in which the unit is located, whichever date is later, affected facilities subject to this subpart shall operate pursuant to a permit issued under the EPA approved State operating permit program.

§ 60.51c Definitions.

Batch HMIWI means an HMIWI that is designed such that neither waste charging nor ash removal can occur during combustion.

Biologicals means preparations made from living organisms and their products, including vaccines, cultures, etc., intended for use in diagnosing, immunizing, or treating humans or animals or in research pertaining thereto.

Blood products means any product derived from human blood, including but not limited to blood plasma, platelets, red or white blood corpuscles, and other derived licensed products, such as interferon, etc.

Body fluids means liquid emanating or derived from humans and limited to blood; dialysate; amniotic, cerebrospinal, synovial, pleural, peritoneal and pericardial fluids; and semen and vaginal secretions.

Bypass stack means a device used for discharging combustion gases to avoid severe damage to the air pollution control device or other equipment.

Chemotherapeutic waste means waste material resulting from the production or use of antineoplastic agents used for the purpose of stopping or reversing the growth of malignant cells.

Co-fired combustor means a unit combusting hospital waste and/or medical/infectious waste with other fuels or wastes (e.g., coal, municipal solid waste) and subject to an enforceable requirement limiting the unit to combusting a fuel feed stream, 10 percent or less of the weight of which is comprised, in aggregate, of hospital waste and medical/infectious waste as measured on a calendar quarter basis. For purposes of this definition, pathological waste, chemotherapeutic waste, and low-level radioactive waste are considered ''other'' wastes when calculating the percentage of hospital waste and medical/infectious waste combusted.

Continuous emission monitoring system or *CEMS* means a monitoring system for continuously measuring and recording the emissions of a pollutant from an affected facility.

Continuous HMIWI means an HMIWI that is designed to allow waste charging and ash removal during combustion.

Dioxins/furans means the combined emissions of tetra-through octa-chlorinated dibenzo-para-dioxins and dibenzofurans, as measured by EPA Reference Method 23.

Dry scrubber means an add-on air pollution control system that injects dry alkaline sorbent (dry injection) or sprays an alkaline sorbent (spray dryer) to react with and neutralize acid gases in the HMIWI exhaust stream forming a dry powder material.

Fabric filter or *baghouse* means an add-on air pollution control system that removes particulate matter (PM) and nonvaporous metals emissions by passing flue gas through filter bags.

Facilities manager means the individual in charge of purchasing, maintaining, and operating the HMIWI or the owner's or operator's representative responsible for the management of the HMIWI. Alternative titles may include director of facilities or vice president of support services.

High-air phase means the stage of the batch operating cycle when the primary chamber reaches and maintains maximum operating temperatures.

Hospital means any facility which has an organized medical staff, maintains at least six inpatient beds, and where the primary function of the institution is to provide diagnostic and therapeutic patient services and continuous nursing care primarily to human inpatients who are not related and who stay on average in excess of 24 hours per admission. This definition does not include facilities maintained for the sole purpose of providing nursing or convalescent care to human patients who generally are not acutely ill but who require continuing medical supervision.

Hospital/medical/infectious waste incinerator or *HMIWI* or *HMIWI unit* means any device that combusts any amount of hospital waste and/or medical/infectious waste.

Hospital/medical/infectious waste incinerator operator or *HMIWI operator* means any person who operates, controls or supervises the day-to-day operation of an HMIWI.

Hospital waste means discards generated at a hospital, except unused items returned to the manufacturer. The definition of hospital waste does

not include human corpses, remains, and anatomical parts that are intended for interment or cremation.

Infectious agent means any organism (such as a virus or bacteria) that is capable of being communicated by invasion and multiplication in body tissues and capable of causing disease or adverse health impacts in humans.

Intermittent HMIWI means an HMIWI that is designed to allow waste charging, but not ash removal, during combustion.

Large HMIWI means:

(1) Except as provided in (2);

(i) An HMIWI whose maximum design waste burning capacity is more than 500 pounds per hour; or

(ii) A continuous or intermittent HMIWI whose maximum charge rate is more than 500 pounds per hour; or

(iii) A batch HMIWI whose maximum charge rate is more than 4,000 pounds per day.

(2) The following are not large HMIWI:

(i) A continuous or intermittent HMIWI whose maximum charge rate is less than or equal to 500 pounds per hour; or

(ii) A batch HMIWI whose maximum charge rate is less than or equal to 4,000 pounds per day.

Low-level radioactive waste means waste material which contains radioactive nuclides emitting primarily beta or gamma radiation, or both, in concentrations or quantities that exceed applicable federal or State standards for unrestricted release. Low-level radioactive waste is not high-level radioactive waste, spent nuclear fuel, or by-product material as defined by the Atomic Energy Act of 1954 (42 U.S.C. 2014(e)(2)).

Malfunction means any sudden, infrequent, and not reasonably preventable failure of air pollution control equipment, process equipment, or a process to operate in a normal or usual manner. Failures that are caused, in part, by poor maintenance or careless operation are not malfunctions. During periods of malfunction the operator shall operate within established parameters as much as possible, and monitoring of all applicable operating parameters shall continue until all waste has been combusted or until the malfunction ceases, whichever comes first.

Maximum charge rate means:

(1) For continuous and intermittent HMIWI, 110 percent of the lowest 3-hour average charge rate measured during the most recent performance test demonstrating compliance with all applicable emission limits.

(2) For batch HMIWI, 110 percent of the lowest daily charge rate measured during the most recent performance test demonstrating compliance with all applicable emission limits.

Maximum design waste burning capacity means:

(1) For intermittent and continuous HMIWI,

$C = P_V \times 15{,}000/8{,}500$

Where:

C=HMIWI capacity, lb/hr

P_V=primary chamber volume, ft^3

15,000=primary chamber heat release rate factor, $Btu/ft^3/hr$

68,500=standard waste heating value, Btu/lb;

(2) For batch HMIWI,

$C = P_V \times 4.5/8$

Where:

C=HMIWI capacity, lb/hr

P_V=primary chamber volume, ft^3

164.5=waste density, lb/ft^3

8=typical hours of operation of a batch HMIWI, hours.

Maximum fabric filter inlet temperature means 110 percent of the lowest 3-hour average temperature at the inlet to the fabric filter (taken, at a minimum, once every minute) measured during the most recent performance test demonstrating compliance with the dioxin/furan emission limit.

Maximum flue gas temperature means 110 percent of the lowest 3-hour average temperature at the outlet from the wet scrubber (taken, at a minimum, once every minute) measured during the most recent performance test demonstrating compliance with the mercury (Hg) emission limit.

Medical/infectious waste means any waste generated in the diagnosis, treatment, or immunization of human beings or animals, in research pertaining thereto, or in the production or testing of biologicals that is listed in

paragraphs (1) through (7) of this definition. The definition of medical/infectious waste does not include hazardous waste identified or listed under the regulations in part 261 of this chapter; household waste, as defined in § 261.4(b)(1) of this chapter; ash from incineration of medical/infectious waste, once the incineration process has been completed; human corpses, remains, and anatomical parts that are intended for interment mation; and domestic sewage materials identified in § 261.4(a)(1) of this chapter.

(1) Cultures and stocks of infectious agents and associated biologicals, including: cultures from medical and pathological laboratories; cultures and stocks of infectious agents from research and industrial laboratories; wastes from the production of biologicals; discarded live and attenuated vaccines; and culture dishes and devices used to transfer, inoculate, and mix cultures.

(2) Human pathological waste, including tissues, organs, and body parts and body fluids that are removed during surgery or autopsy, or other medical procedures, and specimens of body fluids and their containers.

(3) Human blood and blood products including:

(i) Liquid waste human blood;

(ii) Products of blood;

(iii) Items saturated and/or dripping with human blood; or

(iv) Items that were saturated and/or dripping with human blood that are now caked with dried human blood; including serum, plasma, and other blood components, and their containers, which were used or intended for use in either patient care, testing and laboratory analysis or the development of pharmaceuticals. Intravenous bags are also include in this category.

(4) Sharps that have been used in animal or human patient care or treatment or in medical, research, or industrial laboratories, including hypodermic needles, syringes (with or without the attached needle), pasteur pipettes, scalpel blades, blood vials, needles with attached tubing, and culture dishes (regardless of presence of infectious agents). Also included are other types of broken or unbroken glassware that were in contact with infectious agents, such as used slides and cover slips.

(5) Animal waste including contaminated animal carcasses, body parts, and bedding of animals that were known to have been exposed to infectious agents during research (including research in veterinary hospitals), production of biologicals or testing of pharmaceuticals.

(6) Isolation wastes including biological waste and discarded materials contaminated with blood, excretions, exudates, or secretions from humans who are isolated to protect others from certain highly communicable diseases, or isolated animals known to be infected with highly communicable diseases.

(7) Unused sharps including the following unused, discarded sharps: hypodermic needles, suture needles, syringes, and scalpel blades.

Medium HMIWI means:

(1) Except as provided in paragraph (2);

(i) An HMIWI whose maximum design waste burning capacity is more than 200 pounds per hour but less than or equal to 500 pounds per hour; or

(ii) A continuous or intermittent HMIWI whose maximum charge rate is more than 200 pounds per hour but less than or equal to 500 pounds per hour; or

(iii) A batch HMIWI whose maximum charge rate is more than 1,600 pounds per day but less than or equal to 4,000 pounds per day.

(2) The following are not medium HMIWI:

(i) A continuous or intermittent HMIWI whose maximum charge rate is less than or equal to 200 pounds per hour or more than 500 pounds per hour; or

(ii) A batch HMIWI whose maximum charge rate is more than 4,000 pounds per day or less than or equal to 1,600 pounds per day.

Minimum dioxin/furan sorbent flow rate means 90 percent of the highest 3-hour average dioxin/furan sorbent flow rate (taken, at a minimum, once every hour) measured during the most recent performance test demonstrating compliance with the dioxin/furan emission limit.

Minimum Hg sorbent flow rate means 90 percent of the highest 3-hour average Hg sorbent flow rate (taken, at a minimum, once every hour) measured during the most recent performance test demonstrating compliance with the Hg emission limit.

Minimum hydrogen chloride (HCl) sorbent flow rate means 90 percent of the highest 3-hour average HCl sorbent flow rate (taken, at a minimum, once every hour) measured during the most recent performance test demonstrating compliance with the HCl emission limit.

Minimum horsepower or amperage means 90 percent of the highest 3-hour average horsepower or amperage to the wet scrubber (taken, at a minimum, once every minute) measured during the most recent performance test demonstrating compliance with the applicable emission limits.

Minimum pressure drop across the wet scrubber means 90 percent of the highest 3-hour average pressure drop across the wet scrubber PM control device (taken, at a minimum, once every minute) measured during the most recent performance test demonstrating compliance with the PM emission limit.

Minimum scrubber liquor flow rate means 90 percent of the highest 3-hour average liquor flow rate at the inlet to the wet scrubber (taken, at a minimum, once every minute) measured during the most recent performance test demonstrating compliance with all applicable emission limits.

Minimum scrubber liquor pH means 90 percent of the highest 3-hour average liquor pH at the inlet to the wet scrubber (taken, at a minimum, once every minute) measured during the most recent performance test demonstrating compliance with the HCl emission limit.

Minimum secondary chamber temperature means 90 percent of the highest 3-hour average secondary chamber temperature (taken, at a minimum, once every minute) measured during the most recent performance test demonstrating compliance with the PM, CO, or dioxin/furan emission limits.

Modification or *Modified HMIWI* means any change to an HMIWI unit after the effective date of these standards such that:

(1) The cumulative costs of the modifications, over the life of the unit, exceed 50 per centum of the original cost of the construction and installation of the unit (not including the cost of any land purchased in connection with such construction or installation) updated to current costs, or

(2) The change involves a physical change in or change in the method of operation of the unit which increases the amount of any air pollutant emitted by the unit for which standards have been established under section 129 or section 111.

Operating day means a 24-hour period between 12:00 midnight and the following midnight during which any amount of hospital waste or medical/infectious waste is combusted at any time in the HMIWI.

Operation means the period during which waste is combusted in the incinerator excluding periods of startup or shutdown.

Particulate matter or *PM* means the total particulate matter emitted from an HMIWI as measured by EPA Reference Method 5 or EPA Reference Method 29.

Pathological waste means waste material consisting of only human or animal remains, anatomical parts, and/or tissue, the bags/containers used to collect and transport the waste material, and animal bedding (if applicable).

Primary chamber means the chamber in an HMIWI that receives waste material, in which the waste is ignited, and from which ash is removed.

Pyrolysis means the endothermic gasification of hospital waste and/or medical/infectious waste using external energy.

Secondary chamber means a component of the HMIWI that receives combustion gases from the primary chamber and in which the combustion process is completed.

Shutdown means the period of time after all waste has been combusted in the primary chamber. For continuous HMIWI, shutdown shall commence no less than 2 hours after the last charge to the incinerator. For intermittent HMIWI, shutdown shall commence no less than 4 hours after the last charge

to the incinerator. For batch HMIWI, shutdown shall commence no less than 5 hours after the high-air phase of combustion has been completed.

Small HMIWI means:

(1) Except as provided in (2);

(i) An HMIWI whose maximum design waste burning capacity is less than or equal to 200 pounds per hour; or

(ii) A continuous or intermittent HMIWI whose maximum charge rate is less than or equal to 200 pounds per hour; or

(iii) A batch HMIWI whose maximum charge rate is less than or equal to 1,600 pounds per day.

(2) The following are not small HMIWI:

(i) A continuous or intermittent HMIWI whose maximum charge rate is more than 200 pounds per hour;

(ii) A batch HMIWI whose maximum charge rate is more than 1,600 pounds per day.

Standard conditions means a temperature of 20 °C and a pressure of 101.3 kilopascals.

Startup means the period of time between the activation of the system and the first charge to the unit. For batch HMIWI, startup means the period of time between activation of the system and ignition of the waste.

Wet scrubber means an add-on air pollution control device that utilizes an alkaline scrubbing liquor to collect particulate matter (including nonvaporous metals and condensed organics) and/or to absorb and neutralize acid gases.

§ 60.52c Emission limits.

(a) On and after the date on which the initial performance test is completed or is required to be completed under § 60.8, whichever date comes first, no owner or operator of an affected facility shall cause to be discharged into the atmosphere from that affected facility any gases that contain stack emissions in excess of the limits presented in Table 1 of this subpart.

(b) On and after the date on which the initial performance test is completed or is required to be completed under § 60.8, whichever date comes first, no owner or operator of an affected facility shall cause to be discharged into the atmosphere from the stack of that affected facility any gases that exhibit greater than 10 percent opacity (6-minute block average).

(c) On and after the date on which the initial performance test is completed or is required to be completed under § 60.8, whichever date comes first, no owner or operator of an affected facility utilizing a large HMIWI shall cause to be discharged into the atmosphere visible emissions of combustion ash from an ash conveying system (including conveyor transfer points) in excess of 5 percent of the observation period (i.e., 9 minutes per 3-hour period), as determined by EPA Reference Method 22, except as provided in paragraphs (d) and (e) of this section.

(d) The emission limit specified in paragraph (c) of this section does not cover visible emissions discharged inside buildings or enclosures of ash conveying systems; however, the emission limit does cover visible emissions discharged to the atmosphere from buildings or enclosures of ash conveying systems.

(e) The provisions specified in paragraph (c) of this section do not apply during maintenance and repair of ash conveying systems. Maintenance and/or repair shall not exceed 10 operating days per calendar quarter unless the owner or operator obtains written approval from the State agency establishing a date whereby all necessary maintenance and repairs of ash conveying systems shall be completed.

§ 60.53c Operator training and qualification requirements.

(a) No owner or operator of an affected facility shall allow the affected facility to operate at any time unless a fully trained and qualified HMIWI operator is accessible, either at the facility or available within 1 hour. The trained and qualified HMIWI operator may operate the HMIWI directly or be the direct supervisor of one or more HMIWI operators.

(b) Operator training and qualification shall be obtained through a State-approved program or by completing the requirements included in paragraphs (c) through (g) of this section.

(c) Training shall be obtained by completing an HMIWI operator training course that includes, at a minimum, the following provisions:

(1) 24 hours of training on the following subjects:

(i) Environmental concerns, including pathogen destruction and types of emissions;

(ii) Basic combustion principles, including products of combustion;

(iii) Operation of the type of incinerator to be used by the operator, including proper startup, waste charging, and shutdown procedures;

(iv) Combustion controls and monitoring;

(v) Operation of air pollution control equipment and factors affecting performance (if applicable);

(vi) Methods to monitor pollutants (continuous emission monitoring systems and monitoring of HMIWI and air pollution control device operating parameters) and equipment calibration procedures (where applicable);

(vii) Inspection and maintenance of the HMIWI, air pollution control devices, and continuous emission monitoring systems;

(viii) Actions to correct malfunctions or conditions that may lead to malfunction;

(ix) Bottom and fly ash characteristics and handling procedures;

(x) Applicable Federal, State, and local regulations;

(xi) Work safety procedures;

(xii) Pre-startup inspections; and

(xiii) Recordkeeping requirements.

(2) An examination designed and administered by the instructor.

(3) Reference material distributed to the attendees covering the course topics.

(d) Qualification shall be obtained by:

(1) Completion of a training course that satisfies the criteria under paragraph (c) of this section; and

(2) Either 6 months experience as an HMIWI operator, 6 months experience as a direct supervisor of an HMIWI operator, or completion of at least two burn cycles under the observation of two qualified HMIWI operators.

(e) Qualification is valid from the date on which the examination is passed or the completion of the required experience, whichever is later.

(f) To maintain qualification, the trained and qualified HMIWI operator shall complete and pass an annual review or refresher course of at least 4 hours covering, at a minimum, the following:

(1) Update of regulations;

(2) Incinerator operation, including startup and shutdown procedures;

(3) Inspection and maintenance;

(4) Responses to malfunctions or conditions that may lead to malfunction; and

(5) Discussion of operating problems encountered by attendees.

(g) A lapsed qualification shall be renewed by one of the following methods:

(1) For a lapse of less than 3 years, the HMIWI operator shall complete and pass a standard annual refresher course described in paragraph (f) of this section.

(2) For a lapse of 3 years or more, the HMIWI operator shall complete and pass a training course with the minimum criteria described in paragraph (c) of this section.

(h) The owner or operator of an affected facility shall maintain documentation at the facility that address the following:

(1) Summary of the applicable standards under this subpart;

(2) Description of basic combustion theory applicable to an HMIWI;

(3) Procedures for receiving, handling, and charging waste;

(4) HMIWI startup, shutdown, and malfunction procedures;

(5) Procedures for maintaining proper combustion air supply levels;

(6) Procedures for operating the HMIWI and associated air pollution control systems within the standards established under this subpart;

(7) Procedures for responding to periodic malfunction or conditions that may lead to malfunction;

(8) Procedures for monitoring HMIWI emissions;

(9) Reporting and recordkeeping procedures; and

(10) Procedures for handling ash.

(i) The owner or operator of an affected facility shall establish a program for reviewing the information listed in paragraph (h) of this section

annually with each HMIWI operator (defined in § 60.51c).

(1) The initial review of the information listed in paragraph (h) of this section shall be conducted within 6 months after the effective date of this subpart or prior to assumption of responsibilities affecting HMIWI operation, whichever date is later.

(2) Subsequent reviews of the information listed in paragraph (h) of this section shall be conducted annually.

(j) The information listed in paragraph (h) of this section shall be kept in a readily accessible location for all HMIWI operators. This information, along with records of training shall be available for inspection by the EPA or its delegated enforcement agent upon request.

§ 60.54c Siting requirements.

(a) The owner or operator of an affected facility for which construction is commenced after September 15, 1997 shall prepare an analysis of the impacts of the affected facility. The analysis shall consider air pollution control alternatives that minimize, on a site-specific basis, to the maximum extent practicable, potential risks to public health or the environment. In considering such alternatives, the analysis may consider costs, energy impacts, non-air environmental impacts, or any other factors related to the practicability of the alternatives.

(b) Analyses of facility impacts prepared to comply with State, local, or other Federal regulatory requirements may be used to satisfy the requirements of this section, as long as they include the consideration of air pollution control alternatives specified in paragraph (a) of this section.

(c) The owner or operator of the affected facility shall complete and submit the siting requirements of this section as required under § 60.58c(a)(1)(iii).

§ 60.55c Waste management plan.

The owner or operator of an affected facility shall prepare a waste management plan. The waste management plan shall identify both the feasibility and the approach to separate certain components of solid waste from the health care waste stream in order to reduce the amount of toxic emissions from incinerated waste. A waste management plan may include, but is not limited to, elements such as paper, cardboard, plastics, glass, battery, or metal recycling; or purchasing recycled or recyclable products. A waste management plan may include different goals or approaches for different areas or departments of the facility and need not include new waste management goals for every waste stream. It should identify, where possible, reasonably available additional waste management measures, taking into account the effectiveness of waste management measures already in place, the costs of additional measures, the emission reductions expected to be achieved, and any other environmental or energy impacts they might have. The American Hospital Association publication entitled ''An Ounce of Prevention: Waste Reduction Strategies for Health Care Facilities'' (incorporated by reference, see § 60.17) shall be considered in the development of the waste management plan.

§ 60.56c Compliance and performance testing.

(a) The emission limits under this subpart apply at all times except during periods of startup, shutdown, or malfunction, provided that no hospital waste or medical/infectious waste is charged to the affected facility during startup, shutdown, or malfunction.

(b) The owner or operator of an affected facility shall conduct an initial performance test as required under § 60.8 to determine compliance with the emission limits using the procedures and test methods listed in paragraphs (b)(1) through (b)(12) of this section. The use of the bypass stack during a performance test shall invalidate the performance test.

(1) All performance tests shall consist of a minimum of three test runs conducted under representative operating conditions.

(2) The minimum sample time shall be 1 hour per test run unless otherwise indicated.

(3) EPA Reference Method 1 of appendix A of this part shall be used to select the sampling location and number of traverse points.

(4) EPA Reference Method 3 or 3A of appendix A of this part shall be used for gas composition analysis, including measurement of oxygen concentration. EPA Reference Method 3 or 3A of appendix A of this part shall be used simultaneously with each reference method.

(5) The pollutant concentrations shall be adjusted to 7 percent oxygen using the following equation:

$C_{adj}=C_{meas}$ (20.9—7)/(20.9—$\%O_2$) where:

C_{adj}=pollutant concentration adjusted to 7 percent oxygen;

C_{meas}=pollutant concentration measured on a dry basis (20.9—7)=20.9 percent oxygen—7 percent oxygen (defined oxygen correction basis);

20.9=oxygen concentration in air, percent; and

$\%O_2$=oxygen concentration measured on a dry basis, percent.

(6) EPA Reference Method 5 or 29 of appendix A of this part shall be used to measure the particulate matter emissions.

(7) EPA Reference Method 9 of appendix A of this part shall be used to measure stack opacity.

(8) EPA Reference Method 10 or 10B of appendix A of this part shall be used to measure the CO emissions.

(9) EPA Reference Method 23 of appendix A of this part shall be used to measure total dioxin/furan emissions. The minimum sample time shall be 4 hours per test run. If the affected facility has selected the toxic equivalency standards for dioxin/furans, under §60.52c, the following procedures shall be used to determine compliance:

(i) Measure the concentration of each dioxin/furan tetra-through octa-congener emitted using EPA Reference Method 23.

(ii) For each dioxin/furan congener measured in accordance with paragraph (b)(9)(i) of this section, multiply the congener concentration by its corresponding toxic equivalency factor specified in Table 2 of this subpart.

(iii) Sum the products calculated in accordance with paragraph (b)(9)(ii) of this section to obtain the total concentration of dioxins/furans emitted in terms of toxic equivalency.

(10) EPA Reference Method 26 of appendix A of this part shall be used to measure HCl emissions. If the affected facility has selected the percentage reduction standards for HCl under §60.52c, the percentage reduction in HCl emissions ($\%R_{HCl}$) is computed using the following formula:

$$(\%R_{HCl}) = \left(\frac{E_i - E_o}{E_i}\right) \times 100$$

Where:

$\%R_{HCl}$=percentage reduction of HCl emissions achieved;

E_i=HCl emission concentration measured at the control device inlet, corrected to 7 percent oxygen (dry basis); and

E_o=HCl emission concentration measured at the control device outlet, corrected to 7 percent oxygen (dry basis).

(11) EPA Reference Method 29 of appendix A of this part shall be used to measure Pb, Cd, and Hg emissions. If the affected facility has selected the percentage reduction standards for metals under §60.52c, the percentage reduction in emissions ($\%R_{metal}$) is computed using the following formula:

$$(\%R_{metal}) = \left(\frac{E_i - E_o}{E_i}\right) \times 100$$

Where:

$\%R_{metal}$=percentage reduction of metal emission (Pb, Cd, or Hg) achieved;

E_i=metal emission concentration (Pb, Cd, or Hg) measured at the control device inlet, corrected to 7 percent oxygen (dry basis); and

E_o=metal emission concentration (Pb, Cd, or Hg) measured at the control device outlet, corrected to 7 percent oxygen (dry basis).

(12) The EPA Reference Method 22 of appendix A of this part shall be used to determine compliance with the fugitive ash emission limit under §60.52c(c). The minimum observation time shall be a series of three 1-hour observations.

(c) Following the date on which the initial performance test is completed or is required to be completed under §60.8, whichever date comes first, the owner or operator of an affected facility shall:

(1) Determine compliance with the opacity limit by conducting an annual performance test (no more than 12

months following the previous performance test) using the applicable procedures and test methods listed in paragraph (b) of this section.

(2) Determine compliance with the PM, CO, and HCl emission limits by conducting an annual performance test (no more than 12 months following the previous performance test) using the applicable procedures and test methods listed in paragraph (b) of this section. If all three performance tests over a 3-year period indicate compliance with the emission limit for a pollutant (PM, CO, or HCl), the owner or operator may forego a performance test for that pollutant for the subsequent 2 years. At a minimum, a performance test for PM, CO, and HCl shall be conducted every third year (no more than 36 months following the previous performance test). If a performance test conducted every third year indicates compliance with the emission limit for a pollutant (PM, CO, or HCl), the owner or operator may forego a performance test for that pollutant for an additional 2 years. If any performance test indicates noncompliance with the respective emission limit, a performance test for that pollutant shall be conducted annually until all annual performance tests over a 3-year period indicate compliance with the emission limit. The use of the bypass stack during a performance test shall invalidate the performance test.

(3) For large HMIWI, determine compliance with the visible emission limits for fugitive emissions from flyash/bottom ash storage and handling by conducting a performance test using EPA Reference Method 22 on an annual basis (no more than 12 months following the previous performance test).

(4) Facilities using a CEMS to demonstrate compliance with any of the emission limits under §60.52c shall:

(i) Determine compliance with the appropriate emission limit(s) using a 12-hour rolling average, calculated each hour as the average of the previous 12 operating hours (not including startup, shutdown, or malfunction).

(ii) Operate all CEMS in accordance with the applicable procedures under appendices B and F of this part.

(d) The owner or operator of an affected facility equipped with a dry scrubber followed by a fabric filter, a wet scrubber, or a dry scrubber followed by a fabric filter and wet scrubber shall:

(1) Establish the appropriate maximum and minimum operating parameters, indicated in Table 3 of this subpart for each control system, as site specific operating parameters during the initial performance test to determine compliance with the emission limits; and

(2) Following the date on which the initial performance test is completed or is required to be completed under §60.8, whichever date comes first, ensure that the affected facility does not operate above any of the applicable maximum operating parameters or below any of the applicable minimum operating parameters listed in Table 3 of this subpart and measured as 3-hour rolling averages (calculated each hour as the average of the previous 3 operating hours) at all times except during periods of startup, shutdown and malfunction. Operating parameter limits do not apply during performance tests. Operation above the established maximum or below the established minimum operating parameter(s) shall constitute a violation of established operating parameter(s).

(e) Except as provided in paragraph (h) of this section, for affected facilities equipped with a dry scrubber followed by a fabric filter:

(1) Operation of the affected facility above the maximum charge rate and below the minimum secondary chamber temperature (each measured on a 3-hour rolling average) simultaneously shall constitute a violation of the CO emission limit.

(2) Operation of the affected facility above the maximum fabric filter inlet temperature, above the maximum charge rate, and below the minimum dioxin/furan sorbent flow rate (each measured on a 3-hour rolling average) simultaneously shall constitute a violation of the dioxin/furan emission limit.

(3) Operation of the affected facility above the maximum charge rate and below the minimum HCl sorbent flow rate (each measured on a 3-hour rolling average) simultaneously shall constitute a violation of the HCl emission limit.

(4) Operation of the affected facility above the maximum charge rate and below the minimum Hg sorbent flow rate (each measured on a 3-hour rolling average) simultaneously shall constitute a violation of the Hg emission limit.

(5) Use of the bypass stack (except during startup, shutdown, or malfunction) shall constitute a violation of the PM, dioxin/furan, HCl, Pb, Cd and Hg emission limits.

(f) Except as provided in paragraph (h) of this section, for affected facilities equipped with a wet scrubber:

(1) Operation of the affected facility above the maximum charge rate and below the minimum pressure drop across the wet scrubber or below the minimum horsepower or amperage to the system (each measured on a 3-hour rolling average) simultaneously shall constitute a violation of the PM emission limit.

(2) Operation of the affected facility above the maximum charge rate and below the minimum secondary chamber temperature (each measured on a 3-hour rolling average) simultaneously shall constitute a violation of the CO emission limit.

(3) Operation of the affected facility above the maximum charge rate, below the minimum secondary chamber temperature, and below the minimum scrubber liquor flow rate (each measured on a 3-hour rolling average) simultaneously shall constitute a violation of the dioxin/furan emission limit.

(4) Operation of the affected facility above the maximum charge rate and below the minimum scrubber liquor pH (each measured on a 3-hour rolling average) simultaneously shall constitute a violation of the HCl emission limit.

(5) Operation of the affected facility above the maximum flue gas temperature and above the maximum charge rate (each measured on a 3-hour rolling average) simultaneously shall constitute a violation of the Hg emission limit.

(6) Use of the bypass stack (except during startup, shutdown, or malfunction) shall constitute a violation of the PM, dioxin/furan, HCl, Pb, Cd and Hg emission limits.

(g) Except as provided in paragraph (h) of this section, for affected facilities equipped with a dry scrubber followed by a fabric filter and a wet scrubber:

(1) Operation of the affected facility above the maximum charge rate and below the minimum secondary chamber temperature (each measured on a 3-hour rolling average) simultaneously shall constitute a violation of the CO emission limit.

(2) Operation of the affected facility above the maximum fabric filter inlet temperature, above the maximum charge rate, and below the minimum dioxin/furan sorbent flow rate (each measured on a 3-hour rolling average) simultaneously shall constitute a violation of the dioxin/furan emission limit.

(3) Operation of the affected facility above the maximum charge rate and below the minimum scrubber liquor pH (each measured on a 3-hour rolling average) simultaneously shall constitute a violation of the HCl emission limit.

(4) Operation of the affected facility above the maximum charge rate and below the minimum Hg sorbent flow rate (each measured on a 3-hour rolling average) simultaneously shall constitute a violation of the Hg emission limit.

(5) Use of the bypass stack (except during startup, shutdown, or malfunction) shall constitute a violation of the PM, dioxin/furan, HCl, Pb, Cd and Hg emission limits.

(h) The owner or operator of an affected facility may conduct a repeat performance test within 30 days of violation of applicable operating parameter(s) to demonstrate that the affected facility is not in violation of the applicable emission limit(s). Repeat performance tests conducted pursuant to this paragraph shall be conducted using the identical operating parameters that indicated a violation under paragraph (e), (f), or (g) of this section.

(i) The owner or operator of an affected facility using an air pollution control device other than a dry scrubber followed by a fabric filter, a wet scrubber, or a dry scrubber followed by a fabric filter and a wet scrubber to comply with the emission limits under §60.52c shall petition the Administrator for other site-specific operating parameters to be established during

the initial performance test and continuously monitored thereafter. The owner or operator shall not conduct the initial performance test until after the petition has been approved by the Administrator.

(j) The owner or operator of an affected facility may conduct a repeat performance test at any time to establish new values for the operating parameters. The Administrator may request a repeat performance test at any time.

§ 60.57c Monitoring requirements.

(a) The owner or operator of an affected facility shall install, calibrate (to manufacturers' specifications), maintain, and operate devices (or establish methods) for monitoring the applicable maximum and minimum operating parameters listed in Table 3 of this subpart such that these devices (or methods) measure and record values for these operating parameters at the frequencies indicated in Table 3 of this subpart at all times except during periods of startup and shutdown.

(b) The owner or operator of an affected facility shall install, calibrate (to manufacturers' specifications), maintain, and operate a device or method for measuring the use of the bypass stack including date, time, and duration.

(c) The owner or operator of an affected facility using something other than a dry scrubber followed by a fabric filter, a wet scrubber, or a dry scrubber followed by a fabric filter and a wet scrubber to comply with the emission limits under §60.52c shall install, calibrate (to the manufacturers' specifications), maintain, and operate the equipment necessary to monitor the site-specific operating parameters developed pursuant to §60.56c(i).

(d) The owner or operator of an affected facility shall obtain monitoring data at all times during HMIWI operation except during periods of monitoring equipment malfunction, calibration, or repair. At a minimum, valid monitoring data shall be obtained for 75 percent of the operating hours per day and for 90 percent of the operating days per calendar quarter that the affected facility is combusting hospital waste and/or medical/infectious waste.

§ 60.58c Reporting and recordkeeping requirements.

(a) The owner or operator of an affected facility shall submit notifications, as provided by §60.7. In addition, the owner or operator shall submit the following information:

(1) Prior to commencement of construction;

(i) A statement of intent to construct;

(ii) The anticipated date of commencement of construction; and

(iii) All documentation produced as a result of the siting requirements of §60.54c.

(2) Prior to initial startup;

(i) The type(s) of waste to be combusted;

(ii) The maximum design waste burning capacity;

(iii) The anticipated maximum charge rate; and

(iv) If applicable, the petition for site-specific operating parameters under §60.56c(i).

(b) The owner or operator of an affected facility shall maintain the following information (as applicable) for a period of at least 5 years:

(1) Calendar date of each record;

(2) Records of the following data:

(i) Concentrations of any pollutant listed in §60.52c or measurements of opacity as determined by the continuous emission monitoring system (if applicable);

(ii) Results of fugitive emissions (by EPA Reference Method 22) tests, if applicable;

(iii) HMIWI charge dates, times, and weights and hourly charge rates;

(iv) Fabric filter inlet temperatures during each minute of operation, as applicable;

(v) Amount and type of dioxin/furan sorbent used during each hour of operation, as applicable;

(vi) Amount and type of Hg sorbent used during each hour of operation, as applicable;

(vii) Amount and type of HCl sorbent used during each hour of operation, as applicable;

(viii) Secondary chamber temperatures recorded during each minute of operation;

(ix) Liquor flow rate to the wet scrubber inlet during each minute of operation, as applicable;

(x) Horsepower or amperage to the wet scrubber during each minute of operation, as applicable;

(xi) Pressure drop across the wet scrubber system during each minute of operation, as applicable,

(xii) Temperature at the outlet from the wet scrubber during each minute of operation, as applicable;

(xiii) pH at the inlet to the wet scrubber during each minute of operation, as applicable,

(xiv) Records indicating use of the bypass stack, including dates, times, and durations, and

(xv) For affected facilities complying with §§60.56c(i) and 60.57c(c), the owner or operator shall maintain all operating parameter data collected.

(3) Identification of calendar days for which data on emission rates or operating parameters specified under paragraph (b)(2) of this section have not been obtained, with an identification of the emission rates or operating parameters not measured, reasons for not obtaining the data, and a description of corrective actions taken.

(4) Identification of calendar days, times and durations of malfunctions, a description of the malfunction and the corrective action taken.

(5) Identification of calendar days for which data on emission rates or operating parameters specified under paragraph (b)(2) of this section exceeded the applicable limits, with a description of the exceedances, reasons for such exceedances, and a description of corrective actions taken.

(6) The results of the initial, annual, and any subsequent performance tests conducted to determine compliance with the emission limits and/or to establish operating parameters, as applicable.

(7) All documentation produced as a result of the siting requirements of §60.54c;

(8) Records showing the names of HMIWI operators who have completed review of the information in §60.53c(h) as required by §60.53c(i), including the date of the initial review and all subsequent annual reviews;

(9) Records showing the names of the HMIWI operators who have completed the operator training requirements, including documentation of training and the dates of the training;

(10) Records showing the names of the HMIWI operators who have met the criteria for qualification under §60.53c and the dates of their qualification; and

(11) Records of calibration of any monitoring devices as required under §60.57c (a), (b), and (c).

(c) The owner or operator of an affected facility shall submit the information specified in paragraphs (c)(1) through (c)(3) of this section no later than 60 days following the initial performance test. All reports shall be signed by the facilities manager.

(1) The initial performance test data as recorded under §60.56c (b)(1) through (b)(12), as applicable.

(2) The values for the site-specific operating parameters established pursuant to §60.56c (d) or (i), as applicable.

(3) The waste management plan as specified in §60.55c.

(d) An annual report shall be submitted 1 year following the submission of the information in paragraph (c) of this section and subsequent reports shall be submitted no more than 12 months following the previous report (once the unit is subject to permitting requirements under Title V of the Clean Air Act, the owner or operator of an affected facility must submit these reports semiannually). The annual report shall include the information specified in paragraphs (d)(1) through (d)(8) of this section. All reports shall be signed by the facilities manager.

(1) The values for the site-specific operating parameters established pursuant to §60.56c (d) or (i), as applicable.

(2) The highest maximum operating parameter and the lowest minimum operating parameter, as applicable, for each operating parameter recorded for the calendar year being reported, pursuant to §60.56c(d) or (i), as applicable.

(3) The highest maximum operating parameter and the lowest minimum operating parameter, as applicable for each operating parameter recorded

pursuant to § 60.56c (d) or (i) for the calendar year preceding the year being reported, in order to provide the Administrator with a summary of the performance of the affected facility over a 2-year period.

(4) Any information recorded under paragraphs (b)(3) through (b)(5) of this section for the calendar year being reported.

(5) Any information recorded under paragraphs (b)(3) through (b)(5) of this section for the calendar year preceding the year being reported, in order to provide the Administrator with a summary of the performance of the affected facility over a 2-year period.

(6) If a performance test was conducted during the reporting period, the results of that test.

(7) If no exceedances or malfunctions were reported under paragraphs (b)(3) through (b)(5) of this section for the calendar year being reported, a statement that no exceedances occurred during the reporting period.

(8) Any use of the bypass stack, the duration, reason for malfunction, and corrective action taken.

(e) The owner or operator of an affected facility shall submit semiannual reports containing any information recorded under paragraphs (b)(3) through (b)(5) of this section no later than 60 days following the reporting period. The first semiannual reporting period ends 6 months following the submission of information in paragraph (c) of this section. Subsequent reports shall be submitted no later than 6 calendar months following the previous report. All reports shall be signed by the facilities manager.

(f) All records specified under paragraph (b) of this section shall be maintained onsite in either paper copy or computer-readable format, unless an alternative format is approved by the Administrator.

TABLE 1 TO SUBPART EC—EMISSION LIMITS FOR SMALL, MEDIUM, AND LARGE HMIWI

Pollutant	Units (7 percent oxygen, dry basis)	Emission limits		
		HMIWI size		
		Small	Medium	Large
Particulate matter	Milligrams per dry standard cubic meter (grains per dry standard cubic foot).	69 (0.03)	34 (0.015)	34 (0.015).
Carbon monoxide	Parts per million by volume	40	40	40.
Dioxins/furans	Nanograms per dry standard cubic meter total dioxins/furans (grains per billion dry standard cubic feet) or nanograms per dry standard cubic meter total dioxins/furans TEQ (grains per billion dry standard cubic feet).	125 (55) or 2.3 (1.0).	25 (11) or 0.6 (0.26).	25 (11) or 0.6 (0.26).
Hydrogen chloride	Parts per million or percent reduction	15 or 99%	15 or 99%	15 or 99%.
Sulfur dioxide	Parts per million by volume	55	55	55.
Nitrogen oxides	Parts per million by volume	250	250	250.
Lead	Milligrams per dry standard cubic meter (grains per thousand dry standard cubic feet) or percent reduction.	1.2 (0.52) or 70%	0.07 (0.03) or 98%.	0.07 (0.03) or 98%.
Cadmium	Milligrams per dry standard cubic meter (grains per thousand dry standard cubic feet) or percent reduction.	0.16 (0.07) or 65%.	0.04 (0.02) or 90%.	0.04 (0.02) or 90%.
Mercury	Milligrams per dry standard cubic meter (grains per thousand dry standard cubic feet) or percent reduction.	0.55 (0.24) or 85%.	0.55 (0.24) or 85%.	0.55 (0.24) or 85%.

TABLE 2 TO SUPBART EC—TOXIC EQUIVALENCY FACTORS

Dioxin/furan congener	Toxic equivalency factor
2,3,7,8-tetrachlorinated dibenzo-p-dioxin	1
1,2,3,7,8-pentachlorinated dibenzo-p-dioxin	0.5
1,2,3,4,7,8-hexachlorinated dibenzo-p-dioxin	0.1
1,2,3,7,8,9-hexachlorinated dibenzo-p-dioxin	0.1
1,2,3,6,7,8-hexachlorinated dibenzo-p-dioxin	0.1
1,2,3,4,6,7,8-heptachlorinated dibenzo-p-dioxin	0.01
octachlorinated dibenzo-p-dioxin	0.001
2,3,7,8-tetrachlorinated dibenzofuran	0.1
2,3,4,7,8-pentachlorinated dibenzofuran	0.5

TABLE 2 TO SUBPART EC—TOXIC EQUIVALENCY FACTORS—Continued

Dioxin/furan congener	Toxic equivalency factor
1,2,3,7,8-pentachlorinated dibenzofuran	0.05
1,2,3,4,7,8-hexachlorinated dibenzofuran	0.1
1,2,3,6,7,8-hexachlorinated dibenzofuran	0.1
1,2,3,7,8,9-hexachlorinated dibenzofuran	0.1
2,3,4,6,7,8-hexachlorinated dibenzofuran	0.1
1,2,3,4,6,7,8-heptachlorinated dibenzofuran	0.01
1,2,3,4,7,8,9-heptachlorinated dibenzofuran	0.01
Octachlorinated dibenzofuran	0.001

TABLE 3 TO SUBPART EC—OPERATING PARAMETERS TO BE MONITORED AND MINIMUM MEASUREMENT AND RECORDING FREQUENCIES

Operating parameters to be monitored	Minimum frequency		Control system		
	Data measurement	Data recording	Dry scrubber followed by fabric filter	Wet scrubber	Dry scrubber followed by fabric filter and wet scrubber
Maximum operating parameters:					
Maximum charge rate	Continuous	1×hour	✔	✔	✔
Maximum fabric filter inlet temperature.	Continuous	1×minute	✔		✔
Maximum flue gas temperature.	Continuous	1×minute	✔	✔	
Minimum operating parameters:					
Minimum secondary chamber temperature.	Continuous	1×minute	✔	✔	✔
Minimum dioxin/furan sorbent flow rate.	Hourly	1×hour	✔		✔
Minimum HCl sorbent flow rate.	Hourly	1×hour	✔		✔
Minimum mercury (Hg) sorbent flow rate.	Hourly	1×hour	✔		✔
Minimum pressure drop across the wet scrubber or minimum horsepower or amperage to wet scrubber.	Continuous	1×minute		✔	✔
Minimum scrubber liquor flow rate.	Continuous	1×minute		✔	✔
Minimum scrubber liquor pH	Continuous	1×minute		✔	✔

Subpart F—Standards of Performance for Portland Cement Plants

§ 60.60 Applicability and designation of affected facility.

(a) The provisions of this subpart are applicable to the following affected facilities in portland cement plants: Kiln, clinker cooler, raw mill system, finish mill system, raw mill dryer, raw material storage, clinker storage, finished product storage, conveyor transfer points, bagging and bulk loading and unloading systems.

(b) Any facility under paragraph (a) of this section that commences construction or modification after August 17, 1971, is subject to the requirements of this subpart.

[42 FR 37936, July 25, 1977]

§ 60.61 Definitions.

As used in this subpart, all terms not defined herein shall have the meaning given them in the Act and in subpart A of this part.

(a) *Portland cement plant* means any facility manufacturing portland cement by either the wet or dry process.

(b) *Bypass* means any system that prevents all or a portion of the kiln or clinker cooler exhaust gases from entering the main control device and

ducts the gases through a separate control device. This does not include emergency systems designed to duct exhaust gases directly to the atmosphere in the event of a malfunction of any control device controlling kiln or clinker cooler emissions.

(c) *Bypass stack* means the stack that vents exhaust gases to the atmosphere from the bypass control device.

(d) *Monovent* means an exhaust configuration of a building or emission control device (e.g., positive-pressure fabric filter) that extends the length of the structure and has a width very small in relation to its length (i.e., length to width ratio is typically greater than 5:1). The exhaust may be an open vent with or without a roof, louvered vents, or a combination of such features.

[36 FR 24877, Dec. 23, 1971, as amended at 39 FR 20793, June 13, 1974; 53 FR 50363, Dec. 14, 1988]

§ 60.62 Standard for particulate matter.

(a) On and after the date on which the performance test required to be conducted by § 60.8 is completed, no owner or operator subject to the provisions of this subpart shall cause to be discharged into the atmosphere from any kiln any gases which:

(1) Contain particulate matter in excess of 0.15 kg per metric ton of feed (dry basis) to the kiln (0.30 lb per ton).

(2) Exhibit greater than 20 percent opacity.

(b) On and after the date on which the performance test required to be conducted by § 60.8 is completed, no owner or operator subject to the provisions of this subpart shall cause to be discharged into the atmosphere from any clinker cooler any gases which:

(1) Contain particulate matter in excess of 0.050 kg per metric ton of feed (dry basis) to the kiln (0.10 lb per ton).

(2) Exhibit 10 percent opacity, or greater.

(c) On and after the date on which the performance test required to be conducted by § 60.8 is completed, no owner or operator subject to the provisions of this subpart shall cause to be discharged into the atmosphere from any affected facility other than the kiln and clinker cooler any gases which exhibit 10 percent opacity, or greater.

[39 FR 20793, June 14, 1974, as amended at 39 FR 39874, Nov. 12, 1974; 40 FR 46258, Oct. 6, 1975]

§ 60.63 Monitoring of operations.

(a) The owner or operator of any portland cement plant subject to the provisions of this part shall record the daily production rates and kiln feed rates.

(b) Except as provided in paragraph (c) of this section, each owner or operator of a kiln or clinker cooler that is subject to the provisions of this subpart shall install, calibrate, maintain, and operate in accordance with § 60.13 a continuous opacity monitoring system to measure the opacity of emissions discharged into the atmosphere from any kiln or clinker cooler. Except as provided in paragraph (c) of this section, a continuous opacity monitoring system shall be installed on each stack of any multiple stack device controlling emissions from any kiln or clinker cooler. If there is a separate bypass installed, each owner or operator of a kiln or clinker cooler shall also install, calibrate, maintain, and operate a continuous opacity monitoring system on each bypass stack in addition to the main control device stack. Each owner or operator of an affected kiln or clinker cooler for which the performance test required under § 60.8 has been completed on or prior to December 14, 1988, shall install the continuous opacity monitoring system within 180 days after December 14, 1988.

(c) Each owner or operator of a kiln or clinker cooler subject to the provisions of this subpart using a positive-pressure fabric filter with multiple stacks, or a negative-pressure fabric filter with multiple stacks, or an electrostatic precipitator with multiple stacks may, in lieu of installing the continuous opacity monitoring system required by § 60.63(b), monitor visible emissions at least once per day by using a certified visible emissions observer. If the control device exhausts gases through a monovent, visible emission observations in lieu of a continuous opacity monitoring system are required. These observations shall be taken in accordance with EPA Method

9. Visible emissions shall be observed during conditions representative of normal operation. Observations shall be recorded for at least three 6-minute periods each day. In the event that visible emissions are observed for a number of emission sites from the control device with multiple stacks, Method 9 observations shall be recorded for the emission site with the highest opacity. All records of visible emissions shall be maintained for a period of 2 years.

(d) For the purpose of reports under § 60.65, periods of excess emissions that shall be reported are defined as all 6-minute periods during which the average opacity exceeds that allowed by § 60.62(a)(2) or § 60.62(b)(2).

(e) The provisions of paragraphs (a), (b), and (c) of this section apply to kilns and clinker coolers for which construction, modification, or reconstruction commenced after August 17, 1971.

[36 FR 24877, Dec. 23, 1971, as amended at 53 FR 50363, Dec. 14, 1988]

§ 60.64 Test methods and procedures.

(a) In conducting the performance tests required in § 60.8, the owner or operator shall use as reference methods and procedures the test methods in appendix A of this part or other methods and procedures as specified in this section, except as provided in § 60.8(b).

(b) The owner or operator shall determine compliance with the particulate matter standard in § 60.62 as follows:

(1) The emission rate (E) of particulate matter shall be computed for each run using the following equation:

$$E=(c_s Q_{sd})/(P K)$$

where:

E=emission rate of particulate matter, kg/metric ton (lb/ton) of kiln feed.

c_s=concentration of particulate matter, g/dscm (g/dscf).

Q_{sd}=volumetric flow rate of effluent gas, dscm/hr (dscf/hr).

P=total kiln feed (dry basis) rate, metric ton/hr (ton/hr).

K=conversion factor, 1000 g/kg (453.6 g/lb).

(2) Method 5 shall be used to determine the particulate matter concentration (c_s) and the volumetric flow rate (Q_{sd}) of the effluent gas.

The sampling time and sample volume for each run shall be at least 60 minutes and 0.85 dscm (30.0 dscf) for the kiln and at least 60 minutes and 1.15 dscm (40.6 dscf) for the clinker cooler.

(3) Suitable methods shall be used to determine the kiln feed rate (P), except fuels, for each run. Material balance over the production system shall be used to confirm the feed rate.

(4) Method 9 and the procedures in § 60.11 shall be used to determine opacity.

[54 FR 6666, Feb. 14, 1989]

§ 60.65 Recordkeeping and reporting requirements.

(a) Each owner or operator required to install a continuous opacity monitoring system under § 60.63(b) shall submit reports of excess emissions as defined in § 60.63(d). The content of these reports must comply with the requirements in § 60.7(c). Notwithstanding the provisions of § 60.7(c), such reports shall be submitted semiannually.

(b) Each owner or operator monitoring visible emissions under § 60.63(c) shall submit semiannual reports of observed excess emissions as defined in § 60.63(d).

(c) Each owner or operator of facilities subject to the provisions of § 60.63(c) shall submit semiannual reports of the malfunction information required to be recorded by § 60.7(b). These reports shall include the frequency, duration, and cause of any incident resulting in deenergization of any device controlling kiln emissions or in the venting of emissions directly to the atmosphere.

(d) The requirements of this section remain in force until and unless the Agency, in delegating enforcement authority to a State under section 111(c) of the Clean Air Act, 42 U.S.C. 7411, approves reporting requirements or an alternative means of compliance surveillance adopted by such States. In that event, affected sources within the State will be relieved of the obligation to comply with this section, provided that they comply with the requirements established by the State.

[53 FR 50364, Dec. 14, 1988]

§ 60.66 Delegation of authority.

(a) In delegating implementation and enforcement authority to a State

under section 111(c) of the Act, the authorities contained in paragraph (b) of this section shall be retained by the Administrator and not transferred to a State.

(b) Authorities which will not be delegated to States: No restrictions.

[53 FR 50364, Dec. 14, 1988]

Subpart G—Standards of Performance for Nitric Acid Plants

§ 60.70 Applicability and designation of affected facility.

(a) The provisions of this subpart are applicable to each nitric acid production unit, which is the affected facility.

(b) Any facility under paragraph (a) of this section that commences construction or modification after August 17, 1971, is subject to the requirements of this subpart.

[42 FR 37936, July 25, 1977]

§ 60.71 Definitions.

As used in this subpart, all terms not defined herein shall have the meaning given them in the Act and in subpart A of this part.

(a) *Nitric acid production unit* means any facility producing weak nitric acid by either the pressure or atmospheric pressure process.

(b) *Weak nitric acid* means acid which is 30 to 70 percent in strength.

§ 60.72 Standard for nitrogen oxides.

(a) On and after the date on which the performance test required to be conducted by § 60.8 is completed, no owner or operator subject to the provisions of this subpart shall cause to be discharged into the atmosphere from any affected facility any gases which:

(1) Contain nitrogen oxides, expressed as NO_2, in excess of 1.5 kg per metric ton of acid produced (3.0 lb per ton), the production being expressed as 100 percent nitric acid.

(2) Exhibit 10 percent opacity, or greater.

[39 FR 20794, June 14, 1974, as amended at 40 FR 46258, Oct. 6, 1975]

§ 60.73 Emission monitoring.

(a) The source owner or operator shall install, calibrate, maintain, and operate a continuous monitoring system for measuring nitrogen oxides (NO_x). The pollutant gas mixtures under Performance Specification 2 and for calibration checks under § 60.13(d) of this part shall be nitrogen dioxide (NO_2). The span value shall be 500 ppm of NO_2. Method 7 shall be used for the performance evaluations under § 60.13(c). Acceptable alternative methods to Method 7 are given in § 60.74(c).

(b) The owner or operator shall establish a conversion factor for the purpose of converting monitoring data into units of the applicable standard (kg/metric ton, lb/ton). The conversion factor shall be established by measuring emissions with the continuous monitoring system concurrent with measuring emissions with the applicable reference method tests. Using only that portion of the continuous monitoring emission data that represents emission measurements concurrent with the reference method test periods, the conversion factor shall be determined by dividing the reference method test data averages by the monitoring data averages to obtain a ratio expressed in units of the applicable standard to units of the monitoring data, i.e., kg/metric ton per ppm (lb/ton per ppm). The conversion factor shall be reestablished during any performance test under § 60.8 or any continuous monitoring system performance evaluation under § 60.13(c).

(c) The owner or operator shall record the daily production rate and hours of operation.

(d) [Reserved]

(e) For the purpose of reports required under § 60.7(c), periods of excess emissions that shall be reported are defined as any 3-hour period during which the average nitrogen oxides emissions (arithmetic average of three contiguous 1-hour periods) as measured by a continuous monitoring system exceed the standard under § 60.72(a).

[39 FR 20794, June 14, 1974, as amended at 40 FR 46258, Oct. 6, 1975; 50 FR 15894, Apr. 22, 1985; 54 FR 6666, Feb. 14, 1989]

§ 60.74 Test methods and procedures.

(a) In conducting the performance tests required in § 60.8, the owner or operator shall use as reference methods

and procedures the test methods in appendix A of this part or other methods and procedures as specified in this section, except as provided in § 60.8(b). Acceptable alternative methods and procedures are given in paragraph (c) of this section.

(b) The owner or operator shall determine compliance with the NO_x standard in § 60.72 as follows:

(1) The emission rate (E) of NO_x shall be computed for each run using the following equation:

$$E=(C_s Q_{sd})/(P K)$$

where:

E=emission rate of NO_x as NO_2, kg/metric ton (lb/ton) of 100 percent nitric acid.

C_s=concentration of NO_x as NO_2, g/dscm (lb/dscf).

Q_{sd}=volumetric flow rate of effluent gas, dscm/hr (dscf/hr).

P=acid production rate, metric ton/hr (ton/hr) or 100 percent nitric acid.

K=conversion factor, 1000 g/kg (1.0 lb/lb).

(2) Method 7 shall be used to determine the NO_x concentration of each grab sample. Method 1 shall be used to select the sampling site, and the sampling point shall be the centroid of the stack or duct or at a point no closer to the walls than 1 m (3.28 ft). Four grab samples shall be taken at approximately 15-minute intervals. The arithmetic mean of the four sample concentrations shall constitute the run value (C_s).

(3) Method 2 shall be used to determine the volumetric flow rate (Q_{sd}) of the effluent gas. The measurement site shall be the same as for the NO_x sample. A velocity traverse shall be made once per run within the hour that the NO_x samples are taken.

(4) The methods of § 60.73(c) shall be used to determine the production rate (P) of 100 percent nitric acid for each run. Material balance over the production system shall be used to confirm the production rate.

(c) The owner or operator may use the following as alternatives to the reference methods and procedures specified in this section:

(1) For Method 7, Method 7A, 7B, 7C, or 7D may be used. If Method 7C or 7D is used, the sampling time shall be at least 1 hour.

(d) The owner or operator shall use the procedure in § 60.73(b) to determine the conversion factor for converting the monitoring data to the units of the standard.

[54 FR 6666, Feb. 14, 1989]

Subpart H—Standards of Performance for Sulfuric Acid Plants

§ 60.80 Applicability and designation of affected facility.

(a) The provisions of this subpart are applicable to each sulfuric acid production unit, which is the affected facility.

(b) Any facility under paragraph (a) of this section that commences construction or modification after August 17, 1971, is subject to the requirements of this subpart.

[42 FR 37936, July 25, 1977]

§ 60.81 Definitions.

As used in this subpart, all terms not defined herein shall have the meaning given them in the Act and in subpart A of this part.

(a) *Sulfuric acid production unit* means any facility producing sulfuric acid by the contact process by burning elemental sulfur, alkylation acid, hydrogen sulfide, organic sulfides and mercaptans, or acid sludge, but does not include facilities where conversion to sulfuric acid is utilized primarily as a means of preventing emissions to the atmosphere of sulfur dioxide or other sulfur compounds.

(b) *Acid mist* means sulfuric acid mist, as measured by Method 8 of appendix A to this part or an equivalent or alternative method.

[36 FR 24877, Dec. 23, 1971, as amended at 39 FR 20794, June 14, 1974]

§ 60.82 Standard for sulfur dioxide.

(a) On and after the date on which the performance test required to be conducted by § 60.8 is completed, no owner or operator subject to the provisions of this subpart shall cause to be discharged into the atmosphere from any affected facility any gases which contain sulfur dioxide in excess of 2 kg per metric ton of acid produced (4 lb per ton), the production being expressed as 100 percent H_2SO_4.

[39 FR 20794, June 14, 1974]

§ 60.83 Standard for acid mist.

(a) On and after the date on which the performance test required to be conducted by § 60.8 is completed, no owner or operator subject to the provisions of this subpart shall cause to be discharged into the atmosphere from any affected facility any gases which:

(1) Contain acid mist, expressed as H_2SO_4, in excess of 0.075 kg per metric ton of acid produced (0.15 lb per ton), the production being expressed as 100 percent H_2SO_4.

(2) Exhibit 10 percent opacity, or greater.

[39 FR 20794, June 14, 1974, as amended at 40 FR 46258, Oct. 6, 1975]

§ 60.84 Emission monitoring.

(a) A continuous monitoring system for the measurement of sulfur dioxide shall be installed, calibrated, maintained, and operated by the owner or operator. The pollutant gas used to prepare calibration gas mixtures under Performance Specification 2 and for calibration checks under § 60.13(d), shall be sulfur dioxide (SO_2). Method 8 shall be used for conducting monitoring system performance evaluations under § 60.13(c) except that only the sulfur dioxide portion of the Method 8 results shall be used. The span value shall be set at 1000 ppm of sulfur dioxide.

(b) The owner or operator shall establish a conversion factor for the purpose of converting monitoring data into units of the applicable standard (kg/metric ton, lb/ton). The conversion factor shall be determined, as a minimum, three times daily by measuring the concentration of sulfur dioxide entering the converter using suitable methods (e.g., the Reich test, National Air Pollution Control Administration Publication No. 999–AP–13) and calculating the appropriate conversion factor for each eight-hour period as follows:

$$CF = k[(1.000 - 0.015r)/(r - s)]$$

where:

CF=conversion factor (kg/metric ton per ppm, lb/ton per ppm).

k=constant derived from material balance. For determining CF in metric units, k=0.0653. For determining CF in English units, k=0.1306.

r=percentage of sulfur dioxide by volume entering the gas converter. Appropriate corrections must be made for air injection plants subject to the Administrator's approval.

s=percentage of sulfur dioxide by volume in the emissions to the atmosphere determined by the continuous monitoring system required under paragraph (a) of this section.

(c) The owner or operator shall record all conversion factors and values under paragraph (b) of this section from which they were computed (i.e., CF, r, and s).

(d) Alternatively, a source that processes elemental sulfur or an ore that contains elemental sulfur and uses air to supply oxygen may use the following continuous emission monitoring approach and calculation procedures in determining SO_2 emission rates in terms of the standard. This procedure is not required, but is an alternative that would alleviate problems encountered in the measurement of gas velocities or production rate. Continuous emission monitoring of SO_2, O_2, and CO_2 (if required) shall be installed, calibrated, maintained, and operated by the owner or operator and subjected to the certification procedures in Performance Specifications 2 and 3. The calibration procedure and span value for this SO_2 monitor shall be as specified in paragraph (b) of this section. The span value for CO_2 (if required) shall be 10 percent and for O_2 shall be 20.9 percent (air). A conversion factor based on process rate data is not necessary. Calculate the SO_2 emission rate as follows:

$$E_s = (C_s\ S)/[0.265 - (0.126\ \%O_2) - (A\ \%CO_2)]$$

where:

E_s=emission rate of SO_2, kg/metric ton (lb/ton) of 100 percent of H_2SO_4 produced.

C_s=concentration of SO_2, kg/dscm (lb/dscf).

S=acid production rate factor, 368 dscm/metric ton (11,800 dscf/ton) of 100 percent H_2SO_4 produced.

$\%O_2$=oxygen concentration, percent dry basis.

A=auxiliary fuel factor,

=0.00 for no fuel.

=0.0226 for methane.

=0.0217 for natural gas.

=0.0196 for propane.

=0.0172 for No 2 oil.

=0.0161 for No 6 oil.

=0.0148 for coal.

=0.0126 for coke.

$\%CO_2$= carbon dioxide concentration, percent dry basis.

NOTE: It is necessary in some cases to convert measured concentration units to other units for these calculations:

Use the following table for such conversions:

From—	To—	Multiply by—
g/scm	kg/scm	10^{-3}
mg/scm	kg/scm	10^{-6}
ppm (SO_2)	kg/scm	2.660×10^{-6}
ppm (SO_2)	lb/scf	1.660×10^{-7}

(e) For the purpose of reports under § 60.7(c), periods of excess emissions shall be all three-hour periods (or the arithmetic average of three consecutive one-hour periods) during which the integrated average sulfur dioxide emissions exceed the applicable standards under § 60.82.

[39 FR 20794, June 14, 1974, as amended at 40 FR 46258, Oct. 6, 1975; 48 FR 23611, May 25, 1983; 48 FR 4700, Sept. 29, 1983; 48 FR 48669, Oct. 20, 1983; 54 FR 6666, Feb. 14, 1989]

§ 60.85 Test methods and procedures.

(a) In conducting the performance tests required in § 60.8, the owner or operator shall use as reference methods and procedures the test methods in appendix A of this part or other methods and procedures as specified in this section, except as provided in § 60.8(b). Acceptable alternative methods and procedures are given in paragraph (c) of this section.

(b) The owner or operator shall determine compliance with the SO_2 acid mist, and visible emission standards in §§ 60.82 and 60.83 as follows:

(1) The emission rate (E) of acid mist or SO_2 shall be computed for each run using the following equation:

$$E=(CQ_{sd})/(PK)$$

where:

E=emission rate of acid mist or SO_2 kg/metric ton (lb/ton) of 100 percent H_2SO_4 produced.

C=concentration of acid mist or SO_2, g/dscm (lb/dscf).

Q_{sd}=volumetric flow rate of the effluent gas, dscm/hr (dscf/hr).

P=production rate of 100 percent H_2SO_4, metric ton/hr (ton/hr).

K=conversion factor, 1000 g/kg (1.0 lb/lb).

(2) Method 8 shall be used to determine the acid mist and SO_2 concentrations (C's) and the volumetric flow rate (Q_{sd}) of the effluent gas. The moisture content may be considered to be zero. The sampling time and sample volume for each run shall be at least 60 minutes and 1.15 dscm (40.6 dscf).

(3) Suitable methods shall be used to determine the production rate (P) of 100 percent H_2SO_4 for each run. Material balance over the production system shall be used to confirm the production rate.

(4) Method 9 and the procedures in § 60.11 shall be used to determine opacity.

(c) The owner or operator may use the following as alternatives to the reference methods and procedures specified in this section:

(1) If a source processes elemental sulfur or an ore that contains elemental sulfur and uses air to supply oxygen, the following procedure may be used instead of determining the volumetric flow rate and production rate:

(i) The integrated technique of Method 3 is used to determine the O_2 concentration and, if required, CO_2 concentration.

(ii) The SO_2 or acid mist emission rate is calculated as described in § 60.84(d), substituting the acid mist concentration for C_s as appropriate.

[54 FR 6666, Feb. 14, 1989]

Subpart I—Standards of Performance for Hot Mix Asphalt Facilities

§ 60.90 Applicability and designation of affected facility.

(a) The affected facility to which the provisions of this subpart apply is each hot mix asphalt facility. For the purpose of this subpart, a hot mix asphalt facility is comprised only of any combination of the following: dryers; systems for screening, handling, storing, and weighing hot aggregate; systems for loading, transferring, and storing mineral filler, systems for mixing hot mix asphalt; and the loading, transfer, and storage systems associated with emission control systems.

(b) Any facility under paragraph (a) of this section that commences construction or modification after June 11, 1973, is subject to the requirements of this subpart.

[42 FR 37936, July 25, 1977, as amended at 51 FR 12325, Apr. 10, 1986]

§ 60.91 Definitions.

As used in this subpart, all terms not defined herein shall have the meaning given them in the Act and in subpart A of this part.

(a) *Hot mix asphalt facility* means any facility, as described in § 60.90, used to manufacture hot mix asphalt by heating and drying aggregate and mixing with asphalt cements.

[51 FR 12325, Apr. 10, 1986]

§ 60.92 Standard for particulate matter.

(a) On and after the date on which the performance test required to be conducted by § 60.8 is completed, no owner or operator subject to the provisions of this subpart shall discharge or cause the discharge into the atmosphere from any affected facility any gases which:

(1) Contain particulate matter in excess of 90 mg/dscm (0.04 gr/dscf).

(2) Exhibit 20 percent opacity, or greater.

[39 FR 9314, Mar. 8, 1974, as amended at 40 FR 46259, Oct. 6, 1975]

§ 60.93 Test methods and procedures.

(a) In conducting the performance tests required in § 60.8, the owner or operator shall use as reference methods and procedures the test methods in appendix A of this part or other methods and procedures as specified in this section, except as provided in § 60.8(b).

(b) The owner or operator shall determine compliance with the particulate matter standards in § 60.92 as follows:

(1) Method 5 shall be used to determine the particulate matter concentration. The sampling time and sample volume for each run shall be at least 60 minutes and 0.90 dscm (31.8 dscf).

(2) Method 9 and the procedures in § 60.11 shall be used to determine opacity.

[54 FR 6667, Feb. 14, 1989]

Subpart J—Standards of Performance for Petroleum Refineries

§ 60.100 Applicability, designation of affected facility, and reconstruction.

(a) The provisions of this subpart are applicable to the following affected facilities in petroleum refineries: fluid catalytic cracking unit catalyst regenerators, fuel gas combustion devices, and all Claus sulfur recovery plants except Claus plants of 20 long tons per day (LTD) or less. The Claus sulfur recovery plant need not be physically located within the boundaries of a petroleum refinery to be an affected facility, provided it processes gases produced within a petroleum refinery.

(b) Any fluid catalytic cracking unit catalyst regenerator or fuel gas combustion device under paragraph (a) of this section which commences construction or modification after June 11, 1973, or any Claus sulfur recovery plant under paragraph (a) of this section which commences construction or modification after October 4, 1976, is subject to the requirements of this subpart except as provided under paragraphs (c) and (d) of this section.

(c) Any fluid catalytic cracking unit catalyst regenerator under paragraph (b) of this section which commences construction or modification on or before January 17, 1984, is exempted from § 60.104(b).

(d) Any fluid catalytic cracking unit in which a contact material reacts with petroleum derivatives to improve feedstock quality and in which the contact material is regenerated by burning off coke and/or other deposits and that commences construction or modification on or before January 17, 1984, is exempt from this subpart.

(e) For purposes of this subpart, under § 60.15, the ''fixed capital cost of the new components'' includes the fixed capital cost of all depreciable components which are or will be replaced pursuant to all continuous programs of component replacement which are commenced within any 2-year period following January 17, 1984. For purposes of this paragraph, ''commenced'' means that an owner or operator has undertaken a continuous program of component replacement or

that an owner or operator has entered into a contractual obligation to undertake and complete, within a reasonable time, a continuous program of component replacement.

[43 FR 10868, Mar. 15, 1978, as amended at 44 FR 61543, Oct. 25, 1979; 54 FR 34026, Aug. 17, 1989]

§ 60.101 Definitions.

As used in this subpart, all terms not defined herein shall have the meaning given them in the Act and in subpart A.

(a) *Petroleum refinery* means any facility engaged in producing gasoline, kerosene, distillate fuel oils, residual fuel oils, lubricants, or other products through distillation of petroleum or through redistillation, cracking or reforming of unfinished petroleum derivatives.

(b) *Petroleum* means the crude oil removed from the earth and the oils derived from tar sands, shale, and coal.

(c) *Process gas* means any gas generated by a petroleum refinery process unit, except fuel gas and process upset gas as defined in this section.

(d) *Fuel gas* means any gas which is generated at a petroleum refinery and which is combusted. Fuel gas also includes natural gas when the natural gas is combined and combusted in any proportion with a gas generated at a refinery. Fuel gas does not include gases generated by catalytic cracking unit catalyst regenerators and fluid coking burners.

(e) *Process upset gas* means any gas generated by a petroleum refinery process unit as a result of start-up, shut-down, upset or malfunction.

(f) *Refinery process unit* means any segment of the petroleum refinery in which a specific processing operation is conducted.

(g) *Fuel gas combustion device* means any equipment, such as process heaters, boilers and flares used to combust fuel gas, except facilities in which gases are combusted to produce sulfur or sulfuric acid.

(h) *Coke burn-off* means the coke removed from the surface of the fluid catalytic cracking unit catalyst by combustion in the catalyst regenerator. The rate of coke burn-off is calculated by the formula specified in § 60.106.

(i) *Claus sulfur recovery plant* means a process unit which recovers sulfur from hydrogen sulfide by a vapor-phase catalytic reaction of sulfur dioxide and hydrogen sulfide.

(j) *Oxidation control system* means an emission control system which reduces emissions from sulfur recovery plants by converting these emissions to sulfur dioxide.

(k) *Reduction control system* means an emission control system which reduces emissions from sulfur recovery plants by converting these emissions to hydrogen sulfide.

(l) *Reduced sulfur compounds* means hydrogen sulfide (H_2S), carbonyl sulfide (COS) and carbon disulfide (CS_2).

(m) *Fluid catalytic cracking unit* means a refinery process unit in which petroleum derivatives are continuously charged; hydrocarbon molecules in the presence of a catalyst suspended in a fluidized bed are fractured into smaller molecules, or react with a contact material suspended in a fluidized bed to improve feedstock quality for additional processing; and the catalyst or contact material is continuously regenerated by burning off coke and other deposits. The unit includes the riser, reactor, regenerator, air blowers, spent catalyst or contact material stripper, catalyst or contact material recovery equipment, and regenerator equipment for controlling air pollutant emissions and for heat recovery.

(n) *Fluid catalytic cracking unit catalyst regenerator* means one or more regenerators (multiple regenerators) which comprise that portion of the fluid catalytic cracking unit in which coke burn-off and catalyst or contact material regeneration occurs, and includes the regenerator combustion air blower(s).

(o) *Fresh feed* means any petroleum derivative feedstock stream charged directly into the riser or reactor of a fluid catalytic cracking unit except for petroleum derivatives recycled within the fluid catalytic cracking unit, fractionator, or gas recovery unit.

(p) *Contact material* means any substance formulated to remove metals, sulfur, nitrogen, or any other contaminant from petroleum derivatives.

(q) *Valid day* means a 24-hour period in which at least 18 valid hours of data are obtained. A ''valid hour'' is one in which at least 2 valid data points are obtained.

[39 FR 9315, Mar. 8, 1974, as amended at 43 FR 10868, Mar. 15, 1978; 44 FR 13481, Mar. 12, 1979; 45 FR 79453, Dec. 1, 1980; 54 FR 34027, Aug. 17, 1989]

§ 60.102 Standard for particulate matter.

Each owner or operator of any fluid catalytic cracking unit catalyst regenerator that is subject to the requirements of this subpart shall comply with the emission limitations set forth in this section on and after the date on which the initial performance test, required by § 60.8, is completed, but not later than 60 days after achieving the maximum production rate at which the fluid catalytic cracking unit catalyst regenerator will be operated, or 180 days after initial startup, whichever comes first.

(a) No owner or operator subject to the provisions of this subpart shall discharge or cause the discharge into the atmosphere from any fluid catalytic cracking unit catalyst regenerator:

(1) Particulate matter in excess of 1.0 kg/1000 kg (1.0 lb/1000 lb) of coke burnoff in the catalyst regenerator.

(2) Gases exhibiting greater than 30 percent opacity, except for one six-minute average opacity reading in any one hour period.

(b) Where the gases discharged by the fluid catalytic cracking unit catalyst regenerator pass through an incinerator or waste heat boiler in which auxiliary or supplemental liquid or solid fossil fuel is burned, particulate matter in excess of that permitted by paragraph (a)(1) of this section may be emitted to the atmosphere, except that the incremental rate of particulate matter emissions shall not exceed 43.0 g/MJ (0.10 lb/million Btu) of heat input attributable to such liquid or solid fossil fuel.

[39 FR 9315, Mar. 8, 1974, as amended at 42 FR 32427, June 24, 1977; 42 FR 39389, Aug. 4, 1977; 43 FR 10868, Feb. 15, 1978; 54 FR 34027, Aug. 17, 1989]

§ 60.103 Standard for carbon monoxide.

Each owner or operator of any fluid catalytic cracking unit catalyst regenerator that is subject to the requirements of this subpart shall comply with the emission limitations set forth in this section on and after the date on which the initial performance test, required by § 60.8, is completed, but not later than 60 days after achieving the maximum production rate at which the fluid catalytic cracking unit catalyst regenerator will be operated, or 180 days after initial startup, whichever comes first.

(a) No owner or operator subject to the provisions of this subpart shall discharge or cause the discharge into the atmosphere from any fluid catalytic cracking unit catalyst regenerator any gases that contain carbon monoxide (CO) in excess of 500 ppm by volume (dry basis).

[54 FR 34027, Aug. 17, 1989, as amended at 55 FR 40175, Oct. 2, 1990]

§ 60.104 Standards for sulfur oxides.

Each owner or operator that is subject to the requirements of this subpart shall comply with the emission limitations set forth in this section on and after the date on which the initial performance test, required by § 60.8, is completed, but not later than 60 days after achieving the maximum production rate at which the affected facility will be operated, or 180 days after initial startup, whichever comes first.

(a) No owner or operator subject to the provisions of this subpart shall:

(1) Burn in any fuel gas combustion device any fuel gas that contains hydrogen sulfide (H_2S) in excess of 230 mg/dscm (0.10 gr/dscf). The combustion in a flare of process upset gases or fuel gas that is released to the flare as a result of relief valve leakage or other emergency malfunctions is exempt from this paragraph.

(2) Discharge or cause the discharge of any gases into the atmosphere from any Claus sulfur recovery plant containing in excess of:

(i) For an oxidation control system or a reduction control system followed by incineration, 250 ppm by volume

(dry basis) of sulfur dioxide (SO_2) at zero percent excess air.

(ii) For a reduction control system not followed by incineration, 300 ppm by volume of reduced sulfur compounds and 10 ppm by volume of hydrogen sulfide (H_2S), each calculated as ppm SO_2 by volume (dry basis) at zero percent excess air.

(b) Each owner or operator that is subject to the provisions of this subpart shall comply with one of the following conditions for each affected fluid catalytic cracking unit catalyst regenerator:

(1) With an add-on control device, reduce sulfur dioxide emissions to the atmosphere by 90 percent or maintain sulfur dioxide emissions to the atmosphere less than or equal to 50 ppm by volume (vppm), whichever is less stringent; or

(2) Without the use of an add-on control device, maintain sulfur oxides emissions calculated as sulfur dioxide to the atmosphere less than or equal to 9.8 kg/1,000 kg coke burn-off; or

(3) Process in the fluid catalytic cracking unit fresh feed that has a total sulfur content no greater than 0.30 percent by weight.

(c) Compliance with paragraph (b)(1), (b)(2), or (b)(3) of this section is determined daily on a 7-day rolling average basis using the appropriate procedures outlined in § 60.106.

(d) A minimum of 22 valid days of data shall be obtained every 30 rolling successive calendar days when complying with paragraph (b)(1) of this section.

[43 FR 10869, Mar. 15, 1978, as amended at 54 FR 34027, Aug. 17, 1989; 55 FR 40175, Oct. 2, 1990]

§ 60.105 Monitoring of emissions and operations.

(a) Continuous monitoring systems shall be installed, calibrated, maintained, and operated by the owner or operator subject to the provisions of this subpart as follows:

(1) For fluid catalytic cracking unit catalyst regenerators subject to § 60.102(a)(2), an instrument for continuously monitoring and recording the opacity of emissions into the atmosphere. The instrument shall be spanned at 60, 70, or 80 percent opacity.

(2) For fluid catalytic cracking unit catalyst regenerators subject to § 60.103(a), an instrument for continuously monitoring and recording the concentration by volume (dry basis) of CO emissions into the atmosphere, except as provided in paragraph (a)(2) (ii) of this section.

(i) The span value for this instrument is 1,000 ppm CO.

(ii) A CO continuous monitoring system need not be installed if the owner or operator demonstrates that the average CO emissions are less than 50 ppm (dry basis) and also files a written request for exemption to the Administrator and receives such an exemption. The demonstration shall consist of continuously monitoring CO emissions for 30 days using an instrument that shall meet the requirements of Performance Specification 4 of Appendix B of this part. The span value shall be 100 ppm CO instead of 1,000 ppm, and the relative accuracy limit shall be 10 percent of the average CO emissions or 5 ppm CO, whichever is greater. For instruments that are identical to Method 10 and employ the sample conditioning system of Method 10A, the alternative relative accuracy test procedure in § 10.1 of Performance Specification 2 may be used in place of the relative accuracy test.

(3) For fuel gas combustion devices subject to § 60.104(a)(1), an instrument for continuously monitoring and recording the concentration by volume (dry basis, zero percent excess air) of SO_2 emissions into the atmosphere (except where an H_2S monitor is installed under paragraph (a)(4) of this section). The monitor shall include an oxygen monitor for correcting the data for excess air.

(i) The span values for this monitor are 50 ppm SO_2 and 10 percent oxygen (O_2).

(ii) The SO_2 monitoring level equivalent to the H_2S standard under § 60.104(a)(1) shall be 20 ppm (dry basis, zero percent excess air).

(iii) The performance evaluations for this SO_2 monitor under § 60.13(c) shall use Performance Specification 2. Methods 6 and 3 shall be used for conducting the relative accuracy evaluations. Method 6 samples shall be taken at a flow rate of approximately 2 liters/min

for at least 30 minutes. The relative accuracy limit shall be 20 percent or 4 ppm, whichever is greater, and the calibration drift limit shall be 5 percent of the established span value.

(iv) Fuel gas combustion devices having a common source of fuel gas may be monitored at only one location (i.e., after one of the combustion devices), if monitoring at this location accurately represents the S_2 emissions into the atmosphere from each of the combustion devices.

(4) In place of the SO_2 monitor in paragraph (a)(3) of this section, an instrument for continuously monitoring and recording the concentration (dry basis) of H_2S in fuel gases before being burned in any fuel gas combustion device.

(i) The span value for this instrument is 425 mg/dscm H_2S.

(ii) Fuel gas combustion devices having a common source of fuel gas may be monitored at only one location, if monitoring at this location accurately represents the concentration of H_2S in the fuel gas being burned.

(iii) The performance evaluations for this H_2S monitor under §60.13(c) shall use Performance Specification 7. Method 11 shall be used for conducting the relative accuracy evaluations.

(5) For Claus sulfur recovery plants with oxidation control systems or reduction control systems followed by incineration subject to §60.104(a)(2)(i), an instrument for continuously monitoring and recording the concentration (dry basis, zero percent excess air) of SO_2 emissions into the atmosphere. The monitor shall include an oxygen monitor for correcting the data for excess air.

(i) The span values for this monitor are 500 ppm SO_2 and 10 percent O_2.

(ii) The performance evaluations for this SO_2 monitor under §60.13(c) shall use Performance Specification 2. Methods 6 and 3 shall be used for conducting the relative accuracy evaluations.

(6) For Claus sulfur recovery plants with reduction control systems not followed by incineration subject to §60.104(a)(2)(ii), an instrument for continuously monitoring and recording the concentration of reduced sulfur and O_2 emissions into the atmosphere. The reduced sulfur emissions shall be calculated as SO_2 (dry basis, zero percent excess air).

(i) The span values for this monitor are 450 ppm reduced sulfur and 10 percent O_2.

(ii) The performance evaluations for this reduced sulfur (and O_2) monitor under §60.13(c) shall use Performance Specification 5, except the calibration drift specification is 2.5 percent of the span value rather than 5 percent. Methods 15 or 15A and Method 3 shall be used for conducting the relative accuracy evaluations. If Method 3 yields O_2 concentrations below 0.25 percent during the performance specification test, the O_2 concentration may be assumed to be zero and the reduced sulfur CEMS need not include an O_2 monitor.

(7) In place of the reduced sulfur monitor under paragraph (a)(6) of this section, an instrument using an air or O_2 dilution and oxidation system to convert the reduced sulfur to SO_2 for continuously monitoring and recording the concentration (dry basis, zero percent excess air) of the resultant SO_2. The monitor shall include an oxygen monitor for correcting the data for excess oxygen.

(i) The span values for this monitor are 375 ppm SO_2 and 10 percent O_2.

(ii) For reporting purposes, the SO_2 exceedance level for this monitor is 250 ppm (dry basis, zero percent excess air).

(iii) The performance evaluations for this SO_2 (and O_2) monitor under §60.13(c) shall use Performance Specification 5. Methods 15 or 15A and Method 3 shall be used for conducting the relative accuracy evaluations.

(8) An instrument for continuously monitoring and recording concentrations of sulfur dioxide in the gases at both the inlet and outlet of the sulfur dioxide control device from any fluid catalytic cracking unit catalyst regenerator for which the owner or operator seeks to comply with §60.104(b)(1). The span value of the inlet monitor shall be set at 125 percent of the maximum estimated hourly potential sulfur dioxide emission concentration entering the control device, and the span value of the outlet monitor shall be set at 50 percent of the maximum estimated

hourly potential sulfur dioxide emission concentration entering the control device.

(9) An instrument for continuously monitoring and recording concentrations of sulfur dioxide in the gases discharged into the atmosphere from any fluid catalytic cracking unit catalyst regenerator for which the owner or operator seeks to comply specifically with the 50 vppm emission limit under § 60.104(b)(1). The span value of the monitor shall be set at 50 percent of the maximum hourly potential sulfur dioxide emission concentration entering the control device.

(10) An instrument for continuously monitoring and recording concentrations of oxygen (O_2) in the gases at both the inlet and outlet of the sulfur dioxide control device (or the outlet only if specifically complying with the 50 vppm standard) from any fluid catalytic cracking unit catalyst regenerator for which the owner or operator has elected to comply with § 60.104(b)(1). The span of this continuous monitoring system shall be set at 10 percent.

(11) The continuous monitoring systems under paragraphs (a)(8), (a)(9), and (a)(10) of this section are operated and data recorded during all periods of operation of the affected facility including periods of startup, shutdown, or malfunction, except for continuous monitoring system breakdowns, repairs, calibration checks, and zero and span adjustments.

(12) The owner or operator shall follow appendix F, Procedure 1, including quarterly accuracy determinations and daily calibration drift tests, for the continuous monitoring systems under paragraphs (a)(8), (a)(9), and (a)(10) of this section.

(13) When seeking to comply with § 60.104(b)(1), when emission data are not obtained because of continuous monitoring system breakdowns, repairs, calibration checks and zero and span adjustments, emission data will be obtained by using one of the following methods to provide emission data for a minimum of 18 hours per day in at least 22 out of 30 rolling successive calendar days.

(i) The test methods as described in § 60.106(k);

(ii) A spare continuous monitoring system; or

(iii) Other monitoring systems as approved by the Administrator.

(b) [Reserved]

(c) The average coke burn-off rate (thousands of kilograms per hour) and hours of operation shall be recorded daily for any fluid catalytic cracking unit catalyst regenerator subject to § 60.102, § 60.103, or § 60.104(b)(2).

(d) For any fluid catalytic cracking unit catalyst regenerator under § 60.102 that uses an incinerator-waste heat boiler to combust the exhaust gases from the catalyst regenerator, the owner or operator shall record daily the rate of combustion of liquid or solid fossil-fuels (liters/hr or kg/hr) and the hours of operation during which liquid or solid fossil-fuels are combusted in the incinerator-waste heat boiler.

(e) For the purpose of reports under § 60.7(c), periods of excess emissions that shall be determined and reported are defined as follows:

NOTE: All averages, except for opacity, shall be determined as the arithmetic average of the applicable 1-hour averages, e.g., the rolling 3-hour average shall be determined as the arithmetic average of three contiguous 1-hour averages.

(1) *Opacity.* All 1-hour periods that contain two or more 6-minute periods during which the average opacity as measured by the continuous monitoring system under § 60.105(a)(1) exceeds 30 percent.

(2) *Carbon monoxide.* All 1-hour periods during which the average CO concentration as measured by the CO continuous monitoring system under § 60.105(a)(2) exceeds 500 ppm.

(3) *Sulfur dioxide from fuel gas combustion.* (i) All rolling 3-hour periods during which the average concentration of SO_2 as measured by the SO_2 continuous monitoring system under § 60.105(a)(3) exceeds 20 ppm (dry basis, zero percent excess air); or

(ii) All rolling 3-hour periods during which the average concentration of H_2S as measured by the H_2S continuous monitoring system under § 60.105(a)(4) exceeds 230 mg/dscm (0.10 gr/dscf).

(4) *Sulfur dioxide from Claus sulfur recovery plants.* (i) All 12-hour periods during which the average concentration of SO_2 as measured by the SO_2

continuous monitoring system under § 60.105(a)(5) exceeds 250 ppm (dry basis, zero percent excess air); or

(ii) All 12-hour periods during which the average concentration of reduced sulfur (as SO_2) as measured by the reduced sulfur continuous monitoring system under § 60.105(a)(6) exceeds 300 ppm; or

(iii) All 12-hour periods during which the average concentration of SO_2 as measured by the SO_2 continuous monitoring system under § 60.105(a)(7) exceeds 250 ppm (dry basis, zero percent excess air).

[39 FR 9315, Mar. 8, 1974, as amended at 40 FR 46259, Oct. 6, 1975; 42 FR 32427, June 24, 1977; 42 FR 39389, Aug. 4, 1977; 43 FR 10869, Mar. 15, 1978; 48 FR 23611, May 25, 1983; 50 FR 31701, Aug. 5, 1985; 54 FR 34028, Aug. 17, 1989; 55 FR 40175, Oct. 2, 1990]

§ 60.106 Test methods and procedures.

(a) In conducting the performance tests required in § 60.8, the owner or operator shall use as reference methods and procedures the test methods in appendix A of this part or other methods and procedures as specified in this section, except as provided in § 60.8(b).

(b) The owner or operator shall determine compliance with the particulate matter (PM) standards in § 60.102(a) as follows:

(1) The emission rate (E) of PM shall be computed for each run using the following equation:

$$E = \frac{K c_s Q_{sd}}{R_c}$$

where:

E=Emission rate of PM, kg/1000 kg (lb/1000 lb) of coke burn-off.

c_s=Concentration of PM, g/dscm (lb/dscf).

Q_{sd}=Volumetric flow rate of effluent gas, dscm/hr (dscf/hr).

R_c=Coke burn-off rate, kg coke/hr (1000 lb coke/hr).

K=Conversion factor, 1.0 (kg^2/g)/(1000 kg) [10^3 lb/(1000 lb)].

(2) Method 5B or 5F is to be used to determine particulate matter emissions and associated moisture content from affected facilities without wet FGD systems; only Method 5B is to be used after wet FGD systems. The sampling time for each run shall be at least 60 minutes and the sampling rate shall be at least 0.015 dscm/min (0.53 dscf/min), except that shorter sampling times may be approved by the Administrator when process variables or other factors preclude sampling for at least 60 minutes.

(3) The coke burn-off rate (R_c) shall be computed for each run using the following equation:

$R_c = K_1 Q_r (\%CO_2 + \%CO) K_2 Q_a - K_3 Q_r [(\%CO/2) + \%CO_2 + \%O_2]$

where:

R_c=Coke burn-off rate, kg/hr (1000 lb/hr).

Q_r=Volumetric flow rate of exhaust gas from catalyst regenerator before entering the emission control system, dscm/min (dscf/min).

Q_a=Volumetric flow rate of air to FCCU regenerator, as determined from the fluid catalytic cracking unit control room instrumentation, dscm/min (dscf/min).

$\%CO_2$=Carbon dioxide concentration, percent by volume (dry basis).

%CO=Carbon monoxide concentration, percent by volume (dry basis).

$\%O_2$=Oxygen concentration, percent by volume (dry basis).

K_1=Material balance and conversion factor, 0.2982 (kg-min)/(hr-dscm-%) [0.0186 (lb-min)/(hr-dscf-%)].

K_2=Material balance and conversion factor, 2.088 (kg-min)/(hr-dscm-%)[0.1303 (lb-min)/(hr-dscf-%)].

K_3=Material balance and conversion factor, 0.0994 (kg-min)/(hr-dscm-%) [0.0062 (lb-min)/(hr-dscf-%)].

(i) Method 2 shall be used to determine the volumetric flow rate (Q_r).

(ii) The emission correction factor, integrated sampling and analysis procedure of Method 3 shall be used to determine CO_2, CO, and O_2 concentrations.

(4) Method 9 and the procedures of § 60.11 shall be used to determine opacity.

(c) If auxiliary liquid or solid fossil-fuels are burned in an incinerator-waste heat boiler, the owner or operator shall determine the emission rate of PM permitted in § 60.102(b) as follows:

(1) The allowable emission rate (E_s) of PM shall be computed for each run using the following equation:

$E_s = 1.0 + A (H/R_c) K'$

where:

E_s=Emission rate of PM allowed, kg/1000 kg (lb/1000 lb) of coke burn-off in catalyst regenerator.

1.0=Emission standard, kg coke/1000 kg (lb coke/1000 lb).

A=Allowable incremental rate of PM emissions, 0.18 g/million cal (0.10 lb/million Btu).
H=Heat input rate from solid or liquid fossil fuel, million cal/hr (million Btu/hr).
R_c=Coke burn-off rate, kg coke/hr (1000 lb coke/hr).
K′=Conversion factor to units of standard, 1.0 (kg^2/g)/(1000 kg) [10^3 lb/(1000 lb)].

(2) Procedures subject to the approval of the Administrator shall be used to determine the heat input rate.

(3) The procedure in paragraph (b)(3) of this section shall be used to determine the coke burn-off rate (R_c).

(d) The owner or operator shall determine compliance with the CO standard in § 60.103(a) by using the integrated sampling technique of Method 10 to determine the CO concentration (dry basis). The sampling time for each run shall be 60 minutes.

(e) The owner or operator shall determine compliance with the H_2S standard in § 60.104(a)(1) as follows: Method 11 shall be used to determine the H_2 concentration. The gases entering the sampling train should be at about atmospheric pressure. If the pressure in the refinery fuel gas lines is relatively high, a flow control valve may be used to reduce the pressure. If the line pressure is high enough to operate the sampling train without a vacuum pump, the pump may be eliminated from the sampling train. The sample shall be drawn from a point near the centroid of the fuel gas line. The sampling time and sample volume shall be at least 10 minutes and 0.010 dscm (0.35 dscf). Two samples of equal sampling times shall be taken at about 1-hour intervals. The arithmetic average of these two samples shall constitute a run. For most fuel gases, sampling times exceeding 20 minutes may result in depletion of the collection solution, although fuel gases containing low concentrations of H_2S may necessitate sampling for longer periods of time.

(f) The owner or operator shall determine compliance with the SO_2 and the H_2S and reduced sulfur standards in § 60.104(a)(2) as follows:

(1) Method 6 shall be used to determine the SO_2 concentration. The concentration in mg/dscm (lb/dscf) obtained by Method 6 is multiplied by 0.3754 to obtain the concentration in ppm. The sampling point in the duct shall be the centroid of the cross section if the cross-sectional area is less than 5.00 m^2 (54 ft^2) or at a point no closer to the walls than 1.00 m (39 in.) if the cross-sectional area is 5.00 m^2 or more and the centroid is more than 1 m from the wall. The sampling time and sample volume shall be at least 10 minutes and 0.010 dscm (0.35 dscf) for each sample. Eight samples of equal sampling times shall be taken at about 30-minute intervals. The arithmetic average of these eight samples shall constitute a run. Method 4 shall be used to determine the moisture content of the gases. The sampling point for Method 4 shall be adjacent to the sampling point for Method 6. The sampling time for each sample shall be equal to the time it takes for two Method 6 samples. The moisture content from this sample shall be used to correct the corresponding Method 6 samples for moisture. For documenting the oxidation efficiency of the control device for reduced sulfur compounds, Method 15 shall be used following the procedures of paragraph (f)(2) of this section.

(2) Method 15 shall be used to determine the reduced sulfur and H_2 S concentrations. Each run shall consist of 16 samples taken over a minimum of 3 hours. The sampling point shall be the same as that described for Method 6 in paragraph (f)(1) of this section. To ensure minimum residence time for the sample inside the sample lines, the sampling rate shall be at least 3.0 lpm (0.10 cfm). The SO_2 equivalent for each run shall be calculated after being corrected for moisture and oxygen as the arithmetic average of the SO_2 equivalent for each sample during the run. Method 4 shall be used to determine the moisture content of the gases as the paragraph (f)(1) of this section. The sampling time for each sample shall be equal to the time it takes for four Method 15 samples.

(3) The oxygen concentration used to correct the emission rate for excess air shall be obtained by the integrated sampling and analysis procedure of Method 3. The samples shall be taken simultaneously with the SO_2, reduced sulfur and H_2S, or moisture samples. The SO_2, reduced sulfur, and H_2S samples shall be corrected to zero percent

excess air using the equation in paragraph (h)(3) of this section.

(g) Each performance test conducted for the purpose of determining compliance under § 60.104(b) shall consist of all testing performed over a 7-day period using the applicable test methods and procedures specified in this section. To determine compliance, the arithmetic mean of the results of all the tests shall be compared with the applicable standard.

(h) For the purpose of determining compliance with § 60.104(b)(1), the following calculation procedures shall be used:

(1) Calculate each 1-hour average concentration (dry, zero percent oxygen, vppm) of sulfur dioxide at both the inlet and the outlet to the add-on control device as specified in § 60.13(h). These calculations are made using the emission data collected under § 60.105(a).

(2) Calculate a 7-day average (arithmetic mean) concentration of sulfur dioxide for the inlet and for the outlet to the add-on control device using all of the 1-hour average concentration values obtained during seven successive 24-hour periods.

(3) Calculate the 7-day average percent reduction using the following equation:

$$Rso_2 = 100(Cso_2(i) - Cso_2(o))/Cso_2(i)$$

where:

Rso_2 = 7-day average sulfur dioxide emission reduction, percent

$Cso_2(i)$ = sulfur dioxide emission concentration determined in § 60.106(h)(2) at the inlet to the add-on control device, vppm

$Cso_2(o)$ = sulfur dioxide emission concentration determined in § 60.106(h)(2) at the outlet to the add-on control device, vppm

100 = conversion factor, decimal to percent

(4) Outlet concentrations of sulfur dioxide from the add-on control device for compliance with the 50 vppm standard, reported on a dry, O_2-free basis, shall be calculated using the procedures outlined in § 60.106(h)(1) and (2) above, but for the outlet monitor only.

(5) If supplemental sampling data are used for determining the 7-day averages under paragraph (h) of this section and such data are not hourly averages, then the value obtained for each supplemental sample shall be assumed to represent the hourly average for each hour over which the sample was obtained.

(6) For the purpose of adjusting pollutant concentrations to zero percent oxygen, the following equation shall be used:

$$C_{adj} = C_{meas}[20.9_c/(20.9 - \%O_2)]$$

where:

C_{adj} = pollutant concentration adjusted to zero percent oxygen, ppm or g/dscm

C_{meas} = pollutant concentration measured on a dry basis, ppm or g/dscm

20.9_c = 20.9 percent oxygen − 0.0 percent oxygen (defined oxygen correction basis), percent

20.9 = oxygen concentration in air, percent

$\%O_2$ = oxygen concentration measured on a dry basis, percent

(i) For the purpose of determining compliance with § 60.104(b)(2), the following reference methods and calculation procedures shall be used except as provided in paragraph (i)(12) of this section:

(1) One 3-hour test shall be performed each day.

(2) For gases released to the atmosphere from the fluid catalytic cracking unit catalyst regenerator:

(i) Method 8 as modified in § 60.106(i)(3) for the concentration of sulfur oxides calculated as sulfur dioxide and moisture content,

(ii) Method 1 for sample and velocity traverses,

(iii) Method 2 calculation procedures (data obtained from Methods 3 and 8) for velocity and volumetric flow rate, and

(iv) Method 3 for gas analysis.

(3) Method 8 shall be modified by the insertion of a heated glass fiber filter between the probe and first impinger. The probe liner and glass fiber filter temperature shall be maintained above 160 °C (320 °F). The isopropanol impinger shall be eliminated. Sample recovery procedures described in Method 8 for container No. 1 shall be eliminated. The heated glass fiber filter also shall be excluded; however, rinsing of all connecting glassware after the heated glass fiber filter shall be retained and included in container No. 2. Sampled volume shall be at least 1 dscm.

(4) For Method 3, the integrated sampling technique shall be used.

(5) Sampling time for each run shall be at least 3 hours.

(6) All testing shall be performed at the same location. Where the gases discharged by the fluid catalytic cracking unit catalyst regenerator pass through an incinerator-waste heat boiler in which auxiliary or supplemental gaseous, liquid, or solid fossil fuel is burned, testing shall be conducted at a point between the regenerator outlet and the incinerator-waste heat boiler. An alternative sampling location after the waste heat boiler may be used if alternative coke burn-off rate equations, and, if requested, auxiliary/supplemental fuel SO_X credits, have been submitted to and approved by the Administrator prior to sampling.

(7) Coke burn-off rate shall be determined using the procedures specified under paragraph (b)(3) of this section, unless paragraph (i)(6) of this section applies.

(8) Calculate the concentration of sulfur oxides as sulfur dioxide using equation 8–3 in Section 6.5 of Method 8 to calculate and report the total concentration of sulfur oxides as sulfur dioxide (Cso_x).

(9) Sulfur oxides emission rate calculated as sulfur dioxide shall be determined for each test run by the following equation:

$$Eso_x = Cso_X\ Q_{sd}/1{,}000$$

where:

Eso_x = sulfur oxides emission rate calculated as sulfur dioxide, kg/hr

Cso_x = sulfur oxides emission concentration calculated as sulfur dioxide, g/dscm

Q_{sd} = dry volumetric stack gas flow rate corrected to standard conditions, dscm/hr

1,000 = conversion factor, g to kg

(10) Sulfur oxides emissions calculated as sulfur dioxide per 1,000 kg coke burn-off in the fluid catalytic cracking unit catalyst regenerator shall be determined for each test run by the following equation:

$$Rso_x = (Eso_x/R_c)$$

where:

Rso_x = sulfur oxides emissions calculated as sulfur dioxide, kg/1,000 kg coke burn-off

Eso_x = sulfur oxides emission rate calculated as sulfur dioxide, kg/hr

R_c = coke burn-off rate, 1,000 kg/hr

(11) Calculate the 7-day average sulfur oxides emission rate as sulfur dioxide per 1,000 kg of coke burn-off by dividing the sum of the individual daily rates by the number of daily rates summed.

(12) An owner or operator may, upon approval by the Administrator, use an alternative method for determining compliance with §60.104(b)(2), as provided in §60.8(b). Any requests for approval must include data to demonstrate to the Administrator that the alternative method would produce results adequate for the determination of compliance.

(j) For the purpose of determining compliance with §60.104(b)(3), the following analytical methods and calculation procedures shall be used:

(1) One fresh feed sample shall be collected once per 8-hour period.

(2) Fresh feed samples shall be analyzed separately by using any one of the following applicable analytical test methods: ASTM D129–64 (Reapproved 1978), ASTM D1552–83, ASTM D2622–87, or ASTM D1266–87. (These methods are incorporated by reference: see §60.17.) The applicable range of some of these ASTM methods is not adequate to measure the levels of sulfur in some fresh feed samples. Dilution of samples prior to analysis with verification of the dilution ratio is acceptable upon prior approval of the Administrator.

(3) If a fresh feed sample cannot be collected at a single location, then the fresh feed sulfur content shall be determined as follows:

(i) Individual samples shall be collected once per 8-hour period for each separate fresh feed stream charged directly into the riser or reactor of the fluid catalytic cracking unit. For each sample location the fresh feed volumetric flow rate at the time of collecting the fresh feed sample shall be measured and recorded. The same method for measuring volumetric flow rate shall be used at all locations.

(ii) Each fresh feed sample shall be analyzed separately using the methods specified under paragraph (j)(2) of this section.

(iii) Fresh feed sulfur content shall be calculated for each 8-hour period using the following equation:

$$S_f = \sum_{i=1}^{n} \frac{S_i Q_i}{Q_f}$$

where:

S_f = fresh feed sulfur content expressed in percent by weight of fresh feed.

n = number of separate fresh feed streams charged directly to the riser or reactor of the fluid catalytic cracking unit.

Q_f = total volumetric flow rate of fresh feed charged to the fluid catalytic cracking unit.

S_i = fresh feed sulfur content expressed in percent by weight of fresh feed for the ''ith'' sampling location.

Q_i = volumetric flow rate of fresh feed stream for the ''ith'' sampling location.

(4) Calculate a 7-day average (arithmetic mean) sulfur content of the fresh feed using all of the fresh feed sulfur content values obtained during seven successive 24-hour periods.

(k) The test methods used to supplement continuous monitoring system data to meet the minimum data requirements in §60.104(d) will be used as described below or as otherwise approved by the Administrator.

(1) Methods 6, 6B, or 8 are used. The sampling location(s) are the same as those specified for the monitor.

(2) For Method 6, the minimum sampling time is 20 minutes and the minimum sampling volume is 0.02 dscm (0.71 dscf) for each sample. Samples are taken at approximately 60-minute intervals. Each sample represents a 1-hour average. A minimum of 18 valid samples is required to obtain one valid day of data.

(3) For Method 6B, collection of a sample representing a minimum of 18 hours is required to obtain one valid day of data.

(4) For Method 8, the procedures as outlined in this section are used. The equivalent of 16 hours of sampling is required to obtain one valid day of data.

[39 FR 9315, Mar. 8, 1974, as amended at 43 FR 10869, Mar. 15, 1978; 51 FR 42842, Nov. 26, 1986; 52 FR 20392, June 1, 1987; 53 FR 41333, Oct. 21, 1988; 54 FR 34028, Aug. 17, 1989; 55 FR 40176, Oct. 2, 1990; 56 FR 4176, Feb. 4, 1991]

§60.107 Reporting and recordkeeping requirements.

(a) Each owner or operator subject to §60.104(b) shall notify the Administrator of the specific provisions of §60.104(b) with which the owner or operator seeks to comply. Notification shall be submitted with the notification of initial startup required by §60.7(a)(3). If an owner or operator elects at a later date to comply with an alternative provision of §60.104(b), then the Administrator shall be notified by the owner or operator in the report described in paragraph (c) of this section.

(b) Each owner or operator subject to §60.104(b) shall record and maintain the following information:

(1) If subject to §60.104(b)(1),

(i) All data and calibrations from continuous monitoring systems located at the inlet and outlet to the control device, including the results of the daily drift tests and quarterly accuracy assessments required under appendix F, Procedure 1;

(ii) Measurements obtained by supplemental sampling (refer to §60.105(a)(13) and §60.106(k)) for meeting minimum data requirements; and

(iii) The written procedures for the quality control program required by appendix F, Procedure 1.

(2) If subject to §60.104(b)(2), measurements obtained in the daily Method 8 testing, or those obtained by alternative measurement methods, if §60.106(i)(12) applies.

(3) If subject to §60.104(b)(3), data obtained from the daily feed sulfur tests.

(4) Each 7-day rolling average compliance determination.

(c) Each owner or operator subject to §60.104(b) shall submit a report except as provided by paragraph (d) of this section. The following information shall be contained in the report:

(1) Any 7-day period during which:

(i) The average percent reduction and average concentration of sulfur dioxide on a dry, O_2-free basis in the gases discharged to the atmosphere from any fluid cracking unit catalyst regenerator for which the owner or operator seeks to comply with §60.104(b)(1) is below 90 percent and above 50 vppm, as measured by the continuous monitoring system prescribed under §60.105(a)(8), or above 50 vppm, as measured by the outlet continuous monitoring system prescribed under

§ 60.105(a)(9). The average percent reduction and average sulfur dioxide concentration shall be determined using the procedures specified under § 60.106(h);

(ii) The average emission rate of sulfur dioxide in the gases discharged to the atmosphere from any fluid catalytic cracking unit catalyst regenerator for which the owner or operator seeks to comply with § 60.104(b)(2) exceeds 9.8 kg SO_x per 1,000 kg coke burnoff, as measured by the daily testing prescribed under § 60.106(i). The average emission rate shall be determined using the procedures specified under § 60.106(i); and

(iii) The average sulfur content of the fresh feed for which the owner or operator seeks to comply with § 60.104(b)(3) exceeds 0.30 percent by weight. The fresh feed sulfur content, a 7-day rolling average, shall be determined using the procedures specified under § 60.106(j).

(2) Any 30-day period in which the minimum data requirements specified in § 60.104(d) are not obtained.

(3) For each 7-day period during which an exceedance has occurred as defined in paragraphs (c)(1)(i) through (c)(1)(iii) and (c)(2) of this section:

(i) The date that the exceedance occurred;

(ii) An explanation of the exceedance;

(iii) Whether the exceedance was concurrent with a startup, shutdown, or malfunction of the fluid catalytic cracking unit or control system; and

(iv) A description of the corrective action taken, if any.

(4) If subject to § 60.104(b)(1),

(i) The dates for which and brief explanations as to why fewer than 18 valid hours of data were obtained for the inlet continuous monitoring system;

(ii) The dates for which and brief explanations as to why fewer than 18 valid hours of data were obtained for the outlet continuous monitoring system;

(iii) Identification of times when hourly averages have been obtained based on manual sampling methods;

(iv) Identification of the times when the pollutant concentration exceeded full span of the continuous monitoring system; and

(v) Description of any modifications to the continuous monitoring system that could affect the ability of the continuous monitoring system to comply with Performance Specifications 2 or 3.

(vi) Results of daily drift tests and quarterly accuracy assessments as required under appendix F, Procedure 1.

(5) If subject to § 60.104(b)(2), for each day in which a Method 8 sample result was not obtained, the date for which and brief explanation as to why a Method 8 sample result was not obtained, for approval by the Administrator.

(6) If subject to § 60.104(b)(3), for each 8-hour shift in which a feed sulfur measurement was not obtained, the date for which and brief explanation as to why a feed sulfur measurement was not obtained, for approval by the Administrator.

(d) For any periods for which sulfur dioxide or oxides emissions data are not available, the owner or operator of the affected facility shall submit a signed statement indicating if any changes were made in operation of the emission control system during the period of data unavailability which could affect the ability of the system to meet the applicable emission limit. Operations of the control system and affected facility during periods of data unavailability are to be compared with operation of the control system and affected facility before and following the period of data unavailability.

(e) The owner or operator of an affected facility shall submit the reports required under this subpart to the Administrator semiannually for each six-month period. All semiannual reports shall be postmarked by the 30th day following the end of each six-month period.

(f) The owner or operator of the affected facility shall submit a signed statement certifying the accuracy and completeness of the information contained in the report.

[54 FR 34029, Aug. 17, 1989, as amended at 55 FR 40178, Oct. 2, 1990; 64 FR 7465, Feb. 12, 1999]

§ 60.108 Performance test and compliance provisions.

(a) Section 60.8(d) shall apply to the initial performance test specified under

paragraph (c) of this section, but not to the daily performance tests required thereafter as specified in §60.108(d). Section 60.8(f) does not apply when determining compliance with the standards specified under §60.104(b). Performance tests conducted for the purpose of determining compliance under §60.104(b) shall be conducted according to the applicable procedures specified under §60.106.

(b) Owners or operators who seek to comply with §60.104(b)(3) shall meet that standard at all times, including periods of startup, shutdown, and malfunctions.

(c) The initial performance test shall consist of the initial 7-day average calculated for compliance with §60.104(b)(1), (b)(2), or (b)(3).

(d) After conducting the initial performance test prescribed under §60.8, the owner or operator of a fluid catalytic cracking unit catalyst regenerator subject to §60.104(b) shall conduct a performance test for each successive 24-hour period thereafter. The daily performance tests shall be conducted according to the appropriate procedures specified under §60.106. In the event that a sample collected under §60.106(i) or (j) is accidentally lost or conditions occur in which one of the samples must be discontinued because of forced shutdown, failure of an irreplaceable portion of the sample train, extreme meteorological conditions, or other circumstances, beyond the owner or operators' control, compliance may be determined using available data for the 7-day period.

(e) Each owner or operator subject to §60.104(b) who has demonstrated compliance with one of the provisions of §60.104(b) but a later date seeks to comply with another of the provisions of §60.104(b) shall begin conducting daily performance tests as specified under paragraph (d) of this section immediately upon electing to become subject to one of the other provisions of §60.104(b). The owner or operator shall furnish the Administrator with a written notification of the change in the semiannual report required by §60.107(e).

[54 FR 34030, Aug. 17, 1989, as amended at 55 FR 40178, Oct. 2, 1990; 64 FR 7466, Feb. 12, 1999]

§60.109 Delegation of authority.

(a) In delegating implementation and enforcement authority to a State under section 111(c) of the Act, the authorities contained in paragraph (b) of this section shall be retained by the Administrator and not transferred to a State.

(b) Authorities which shall not be delegated to States:

(1) Section 60.105(a)(13)(iii),

(2) Section 60.106(i)(12).

[54 FR 34031, Aug. 17, 1989, as amended at 55 FR 40178, Oct. 2, 1990]

Subpart K—Standards of Performance for Storage Vessels for Petroleum Liquids for Which Construction, Reconstruction, or Modification Commenced After June 11, 1973, and Prior to May 19, 1978

§60.110 Applicability and designation of affected facility.

(a) Except as provided in §60.110(b), the affected facility to which this subpart applies is each storage vessel for petroleum liquids which has a storage capacity greater than 151,412 liters (40,000 gallons).

(b) This subpart does not apply to storage vessels for petroleum or condensate stored, processed, and/or treated at a drilling and production facility prior to custody transfer.

(c) Subject to the requirements of this subpart is any facility under paragraph (a) of this section which:

(1) Has a capacity greater than 151,416 liters (40,000 gallons), but not exceeding 246,052 liters (65,000 gallons), and commences construction or modification after March 8, 1974, and prior to May 19, 1978.

(2) Has a capacity greater than 246,052 liters (65,000 gallons) and commences construction or modification after June 11, 1973, and prior to May 19, 1978.

[42 FR 37937, July 25, 1977, as amended at 45 FR 23379, Apr. 4, 1980]

§60.111 Definitions.

As used in this subpart, all terms not defined herein shall have the meaning given them in the Act and in subpart A of this part.

(a) *Storage vessel* means any tank, reservoir, or container used for the storage of petroleum liquids, but does not include:

(1) Pressure vessels which are designed to operate in excess of 15 pounds per square inch gauge without emissions to the atmosphere except under emergency conditions,

(2) Subsurface caverns or porous rock reservoirs, or

(3) Underground tanks if the total volume of petroleum liquids added to and taken from a tank annually does not exceed twice the volume of the tank.

(b) *Petroleum liquids* means petroleum, condensate, and any finished or intermediate products manufactured in a petroleum refinery but does not mean Nos. 2 through 6 fuel oils as specified in ASTM D396–78, gas turbine fuel oils Nos. 2–GT through 4–GT as specified in ASTM D2880–78, or diesel fuel oils Nos. 2–D and 4–D as specified in ASTM D975–78. (These three methods are incorporated by reference—see §60.17.)

(c) *Petroleum refinery* means each facility engaged in producing gasoline, kerosene, distillate fuel oils, residual fuel oils, lubricants, or other products through distillation of petroleum or through redistillation, cracking, extracting, or reforming of unfinished petroleum derivatives.

(d) *Petroleum* means the crude oil removed from the earth and the oils derived from tar sands, shale, and coal.

(e) *Hydrocarbon* means any organic compound consisting predominantly of carbon and hydrogen.

(f) *Condensate* means hydrocarbon liquid separated from natural gas which condenses due to changes in the temperature and/or pressure and remains liquid at standard conditions.

(g) *Custody transfer* means the transfer of produced petroleum and/or condensate, after processing and/or treating in the producing operations, from storage tanks or automatic transfer facilities to pipelines or any other forms of transportation.

(h) *Drilling and production facility* means all drilling and servicing equipment, wells, flow lines, separators, equipment, gathering lines, and auxiliary nontransportation-related equipment used in the production of petroleum but does not include natural gasoline plants.

(i) *True vapor pressure* means the equilibrium partial pressure exerted by a petroleum liquid as determined in accordance with methods described in American Petroleum Institute Bulletin 2517, Evaporation Loss from External Floating-Roof Tanks, Second Edition, February 1980 (incorporated by reference—see §60.17).

(j) *Floating roof* means a storage vessel cover consisting of a double deck, pontoon single deck, internal floating cover or covered floating roof, which rests upon and is supported by the petroleum liquid being contained, and is equipped with a closure seal or seals to close the space between the roof edge and tank wall.

(k) *Vapor recovery system* means a vapor gathering system capable of collecting all hydrocarbon vapors and gases discharged from the storage vessel and a vapor disposal system capable of processing such hydrocarbon vapors and gases so as to prevent their emission to the atmosphere.

(l) *Reid vapor pressure* is the absolute vapor pressure of volatile crude oil and volatile nonviscous petroleum liquids, except liquified petroleum gases, as determined by ASTM D323–82 (incorporated by reference—see §60.17).

[39 FR 9317, Mar. 8, 1974; 39 FR 13776, Apr. 17, 1974, as amended at 39 FR 20794, June 14, 1974; 45 FR 23379, Apr. 4, 1980; 48 FR 3737, Jan. 27, 1983; 52 FR 11429, Apr. 8, 1987]

§ 60.112 Standard for volatile organic compounds (VOC).

(a) The owner or operator of any storage vessel to which this subpart applies shall store petroleum liquids as follows:

(1) If the true vapor pressure of the petroleum liquid, as stored, is equal to or greater than 78 mm Hg (1.5 psia) but not greater than 570 mm Hg (11.1 psia), the storage vessel shall be equipped with a floating roof, a vapor recovery system, or their equivalents.

(2) If the true vapor pressure of the petroleum liquid as stored is greater than 570 mm Hg (11.1 psia), the storage vessel shall be equipped with a vapor recovery system or its equivalent.

[39 FR 9317, Mar. 8, 1974; 39 FR 13776, Apr. 17, 1974, as amended at 45 FR 23379, Apr. 4, 1980]

§ 60.113 Monitoring of operations.

(a) Except as provided in paragraph (d) of this section, the owner or operator subject to this subpart shall maintain a record of the petroleum liquid stored, the period of storage, and the maximum true vapor pressure of that liquid during the respective storage period.

(b) Available data on the typical Reid vapor pressure and the maximum expected storage temperature of the stored product may be used to determine the maximum true vapor pressure from nomographs contained in API Bulletin 2517, unless the Administrator specifically requests that the liquid be sampled, the actual storage temperature determined, and the Reid vapor pressure determined from the sample(s).

(c) The true vapor pressure of each type of crude oil with a Reid vapor pressure less than 13.8 kPa (2.0 psia) or whose physical properties preclude determination by the recommended method is to be determined from available data and recorded if the estimated true vapor pressure is greater than 6.9 kPa (1.0 psia).

(d) The following are exempt from the requirements of this section:

(1) Each owner or operator of each affected facility which stores petroleum liquids with a Reid vapor pressure of less than 6.9 kPa (1.0 psia) provided the maximum true vapor pressure does not exceed 6.9 kPa (1.0 psia).

(2) Each owner or operator of each affected facility equipped with a vapor recovery and return or disposal system in accordance with the requirements of § 60.112.

[45 FR 23379, Apr. 4, 1980]

Subpart Ka—Standards of Performance for Storage Vessels for Petroleum Liquids for Which Construction, Reconstruction, or Modification Commenced After May 18, 1978, and Prior to July 23, 1984

§ 60.110a Applicability and designation of affected facility.

(a) Except as provided in paragraph (b) of this section, the affected facility to which this subpart applies is each storage vessel for petroleum liquids which has a storage capacity greater than 151,416 liters (40,000 gallons) and for which construction is commenced after May 18, 1978.

(b) Each petroleum liquid storage vessel with a capacity of less than 1,589,873 liters (420,000 gallons) used for petroleum or condensate stored, processed, or treated prior to custody transfer is not an affected facility and, therefore, is exempt from the requirements of this subpart.

[45 FR 23379, Apr. 4, 1980]

§ 60.111a Definitions.

In addition to the terms and their definitions listed in the Act and subpart A of this part the following definitions apply in this subpart:

(a) *Storage vessel* means each tank, reservoir, or container used for the storage of petroleum liquids, but does not include:

(1) Pressure vessels which are designed to operate in excess of 204.9 kPa (15 psig) without emissions to the atmosphere except under emergency conditions.

(2) Subsurface caverns or porous rock reservoirs, or

(3) Underground tanks if the total volume of petroleum liquids added to and taken from a tank annually does not exceed twice the volume of the tank.

(b) *Petroleum liquids* means petroleum, condensate, and any finished or

intermediate products manufactured in a petroleum refinery but does not mean Nos. 2 through 6 fuel oils as specified in ASTM D396–78, gas turbine fuel oils Nos. 2–GT through 4–GT as specified in ASTM D2880–78, gas turbine fuel oils Nos. 2–GT through 4–GT as specified in ASTM D2880–78, or diesel fuel oils Nos. 2–D and 4–D as specified in ASTM D975–78. (These three methods are incorporated by reference—see § 60.17.)

(c) *Petroleum refinery* means each facility engaged in producing gasoline, kerosene, distillate fuel oils, residual fuel oils, lubricants, or other products through distillation of petroleum or through redistillation, cracking, extracting, or reforming of unfinished petroleum derivatives.

(d) *Petroleum* means the crude oil removed from the earth and the oils derived from tar sands, shale, and coal.

(e) *Condensate* means hydrocarbon liquid separated from natural gas which condenses due to changes in the temperature or pressure, or both, and remains liquid at standard conditions.

(f) *True vapor pressure* means the equilibrium partial pressure exerted by a petroleum liquid such as determined in accordance with methods described in American Petroleum Institute Bulletin 2517, Evaporation Loss from External Floating-Roof Tanks, Second Edition, February 1980 (incorporated by reference—see § 60.17).

(g) *Reid vapor pressure* is the absolute vapor pressure of volatile crude oil and nonviscous petroleum liquids, except liquified petroleum gases, as determined by ASTM D323–82 (incorporated by reference—see § 60.17).

(h) *Liquid-mounted seal* means a foam or liquid-filled primary seal mounted in contact with the liquid between the tank wall and the floating roof continuously around the circumference of the tank.

(i) *Metallic shoe seal* includes but is not limited to a metal sheet held vertically against the tank wall by springs or weighted levers and is connected by braces to the floating roof. A flexible coated fabric (envelope) spans the annular space between the metal sheet and the floating roof.

(j) *Vapor-mounted seal* means a foam-filled primary seal mounted continuously around the circumference of the tank so there is an annular vapor space underneath the seal. The annular vapor space is bounded by the bottom of the primary seal, the tank wall, the liquid surface, and the floating roof.

(k) *Custody transfer* means the transfer of produced petroleum and/or condensate, after processing and/or treating in the producing operations, from storage tanks or automatic transfer facilities to pipelines or any other forms of transportation.

[45 FR 23379, Apr. 4, 1980, as amended at 48 FR 3737, Jan. 27, 1983; 52 FR 11429, Apr. 8, 1987]

§ 60.112a Standard for volatile organic compounds (VOC).

(a) The owner or operator of each storage vessel to which this subpart applies which contains a petroleum liquid which, as stored, has a true vapor pressure equal to or greater than 10.3 kPa (1.5 psia) but not greater than 76.6 kPa (11.1 psia) shall equip the storage vessel with one of the following:

(1) An external floating roof, consisting of a pontoon-type or double-deck-type cover that rests on the surface of the liquid contents and is equipped with a closure device between the tank wall and the roof edge. Except as provided in paragraph (a)(1)(ii)(D) of this section, the closure device is to consist of two seals, one above the other. The lower seal is referred to as the primary seal and the upper seal is referred to as the secondary seal. The roof is to be floating on the liquid at all times (i.e., off the roof leg supports) except during initial fill and when the tank is completely emptied and subsequently refilled. The process of emptying and refilling when the roof is resting on the leg supports shall be continuous and shall be accomplished as rapidly as possible.

(i) The primary seal is to be either a metallic shoe seal, a liquid-mounted seal, or a vapor-mounted seal. Each seal is to meet the following requirements:

(A) The accumulated area of gaps between the tank wall and the metallic shoe seal or the liquid-mounted seal shall not exceed 212 cm^2 per meter of tank diameter (10.0 in^2 per ft of tank diameter) and the width of any portion of

any gap shall not exceed 3.81 cm (1½ in).

(B) The accumulated area of gaps between the tank wall and the vapor-mounted seal shall not exceed 21.2 cm^2 per meter of tank diameter (1.0 in^2 per ft of tank diameter) and the width of any portion of any gap shall not exceed 1.27 cm (½ in).

(C) One end of the metallic shoe is to extend into the stored liquid and the other end is to extend a minimum vertical distance of 61 cm (24 in) above the stored liquid surface.

(D) There are to be no holes, tears, or other openings in the shoe, seal fabric, or seal envelope.

(ii) The secondary seal is to meet the following requirements:

(A) The secondary seal is to be installed above the primary seal so that it completely covers the space between the roof edge and the tank wall except as provided in paragraph (a)(1)(ii)(B) of this section.

(B) The accumulated area of gaps between the tank wall and the secondary seal used in combination with a metallic shoe or liquid-mounted primary seal shall not exceed 21.2 cm^2per meter of tank diameter (1.0 in^2per ft. of tank diameter) and the width of any portion of any gap shall not exceed 1.27 cm (½ in.). There shall be no gaps between the tank wall and the secondary seal used in combination with a vapor-mounted primary seal.

(C) There are to be no holes, tears or other openings in the seal or seal fabric.

(D) The owner or operator is exempted from the requirements for secondary seals and the secondary seal gap criteria when performing gap measurements or inspections of the primary seal.

(iii) Each opening in the roof except for automatic bleeder vents and rim space vents is to provide a projection below the liquid surface. Each opening in the roof except for automatic bleeder vents, rim space vents and leg sleeves is to be equipped with a cover, seal or lid which is to be maintained in a closed position at all times (i.e., no visible gap) except when the device is in actual use or as described in pargraph (a)(1)(iv) of this section. Automatic bleeder vents are to be closed at all times when the roof is floating, except when the roof is being floated off or is being landed on the roof leg supports. Rim vents are to be set to open when the roof is being floated off the roof legs supports or at the manufacturer's recommended setting.

(iv) Each emergency roof drain is to be provided with a slotted membrane fabric cover that covers at least 90 percent of the area of the opening.

(2) A fixed roof with an internal floating type cover equipped with a continuous closure device between the tank wall and the cover edge. The cover is to be floating at all times, (i.e., off the leg supports) except during initial fill and when the tank is completely emptied and subsequently refilled. The process of emptying and refilling when the cover is resting on the leg supports shall be continuous and shall be accomplished as rapidly as possible. Each opening in the cover except for automatic bleeder vents and the rim space vents is to provide a projection below the liquid surface. Each opening in the cover except for automatic bleeder vents, rim space vents, stub drains and leg sleeves is to be equipped with a cover, seal, or lid which is to be maintained in a closed position at all times (i.e., no visible gap) except when the device is in actual use. Automatic bleeder vents are to be closed at all times when the cover is floating except when the cover is being floated off or is being landed on the leg supports. Rim vents are to be set to open only when the cover is being floated off the leg supports or at the manufacturer's recommended setting.

(3) A vapor recovery system which collects all VOC vapors and gases discharged from the storage vessel, and a vapor return or disposal system which is designed to process such VOC vapors and gases so as to reduce their emission to the atmosphere by at least 95 percent by weight.

(4) A system equivalent to those described in paragraphs (a)(1), (a)(2), or (a)(3) of this section as provided in § 60.114a.

(b) The owner or operator of each storage vessel to which this subpart applies which contains a petroleum liquid

which, as stored, has a true vapor pressure greater than 76.6 kPa (11.1 psia), shall equip the storage vessel with a vapor recovery system which collects all VOC vapors and gases discharged from the storage vessel, and a vapor return or disposal system which is designed to process such VOC vapors and gases so as to reduce their emission to the atmosphere by at least 95 percent by weight.

[45 FR 23379, Apr. 4, 1980, as amended at 45 FR 83229, Dec. 18, 1980]

§ 60.113a Testing and procedures.

(a) Except as provided in § 60.8(b) compliance with the standard prescribed in § 60.112a shall be determined as follows or in accordance with an equivalent procedure as provided in § 60.114a.

(1) The owner or operator of each storage vessel to which this subpart applies which has an external floating roof shall meet the following requirements:

(i) Determine the gap areas and maximum gap widths between the primary seal and the tank wall and between the secondary seal and the tank wall according to the following frequency:

(A) For primary seals, gap measurements shall be performed within 60 days of the initial fill with petroleum liquid and at least once every five years thereafter. All primary seal inspections or gap measurements which require the removal or dislodging of the secondary seal shall be accomplished as rapidly as possible and the secondary seal shall be replaced as soon as possible.

(B) For secondary seals, gap measurements shall be performed within 60 days of the initial fill with petroleum liquid and at least once every year thereafter.

(C) If any storage vessel is out of service for a period of one year or more, subsequent refilling with petroleum liquid shall be considered initial fill for the purposes of paragraphs (a)(1)(i)(A) and (a)(1)(i)(B) of this section.

(D) Keep records of each gap measurement at the plant for a period of at least 2 years following the date of measurement. Each record shall identify the vessel on which the measurement was performed and shall contain the date of the seal gap measurement, the raw data obtained in the measurement process required by paragraph (a)(1)(ii) of this section and the calculation required by paragraph (a)(1)(iii) of this section.

(E) If either the seal gap calculated in accord with paragraph (a)(1)(iii) of this section or the measured maximum seal gap exceeds the limitations specified by § 60.112a of this subpart, a report shall be furnished to the Administrator within 60 days of the date of measurements. The report shall identify the vessel and list each reason why the vessel did not meet the specifications of § 60.112a. The report shall also describe the actions necessary to bring the storage vessel into compliance with the specifications of § 60.112a.

(ii) Determine gap widths in the primary and secondary seals individually by the following procedures:

(A) Measure seal gaps, if any, at one or more floating roof levels when the roof is floating off the roof leg supports.

(B) Measure seal gaps around the entire circumference of the tank in each place where a ⅛″ diameter uniform probe passes freely (without forcing or binding against seal) between the seal and the tank wall and measure the circumferential distance of each such location.

(C) The total surface area of each gap described in paragraph (a)(1)(ii)(B) of this section shall be determined by using probes of various widths to accurately measure the actual distance from the tank wall to the seal and multiplying each such width by its respective circumferential distance.

(iii) Add the gap surface area of each gap location for the primary seal and the secondary seal individually. Divide the sum for each seal by the nominal diameter of the tank and compare each ratio to the appropriate ratio in the standard in § 60.112a(a)(1)(i) and § 60.112a(a)(1)(ii).

(iv) Provide the Administrator 30 days prior notice of the gap measurement to afford the Administrator the opportunity to have an observer present.

(2) The owner or operator of each storage vessel to which this subpart applies which has a vapor recovery and return or disposal system shall provide the following information to the Administrator on or before the date on which construction of the storage vessel commences:

(i) Emission data, if available, for a similar vapor recovery and return or disposal system used on the same type of storage vessel, which can be used to determine the efficiency of the system. A complete description of the emission measurement method used must be included.

(ii) The manufacturer's design specifications and estimated emission reduction capability of the system.

(iii) The operation and maintenance plan for the system.

(iv) Any other information which will be useful to the Administrator in evaluating the effectiveness of the system in reducing VOC emissions.

[45 FR 23379, Apr. 4, 1980, as amended at 52 FR 11429, Apr. 8, 1987]

§ 60.114a Alternative means of emission limitation.

(a) If, in the Administrator's judgment, an alternative means of emission limitation will achieve a reduction in emissions at least equivalent to the reduction in emissions achieved by any requirement in § 60.112a, the Administrator will publish in the FEDERAL REGISTER a notice permitting the use of the alternative means for purposes of compliance with that requirement.

(b) Any notice under paragraph (a) of this section will be published only after notice and an opportunity for a hearing.

(c) Any person seeking permission under this section shall submit to the Administrator a written application including:

(1) An actual emissions test that uses a full-sized or scale-model storage vessel that accurately collects and measures all VOC emissions from a given control device and that accurately simulates wind and accounts for other emission variables such as temperature and barometric pressure.

(2) An engineering evaluation that the Administrator determines is an accurate method of determining equivalence.

(d) The Administrator may condition the permission on requirements that may be necessary to ensure operation and maintenance to achieve the same emissions reduction as specified in § 60.112a.

(e) The primary vapor-mounted seal in the ''Volume-Maximizing Seal'' manufactured by R.F.I. Services Corporation is approved as equivalent to the vapor-mounted seal required by § 60.112a(a)(1)(i) and must meet the gap criteria specified in § 60.112a(a)(1)(i)(B). There shall be no gaps between the tank wall and any secondary seal used in conjunction with the primary seal in the ''Volume-Maximizing Seal''.

[52 FR 11429, Apr. 8, 1987]

§ 60.115a Monitoring of operations.

(a) Except as provided in paragraph (d) of this section, the owner or operator subject to this subpart shall maintain a record of the petroleum liquid stored, the period of storage, and the maximum true vapor pressure of that liquid during the respective storage period.

(b) Available data on the typical Reid vapor pressure and the maximum expected storage temperature of the stored product may be used to determine the maximum true vapor pressure from nomographs contained in API Bulletin 2517, unless the Administrator specifically requests that the liquid be sampled, the actual storage temperature determined, and the Reid vapor pressure determined from the sample(s).

(c) The true vapor pressure of each type of crude oil with a Reid vapor pressure less than 13.8 kPa (2.0 psia) or whose physical properties preclude determination by the recommended method is to be determined from available data and recorded if the estimated true vapor pressure is greater than 6.9 kPa (1.0 psia).

(d) The following are exempt from the requirements of this section:

(1) Each owner or operator of each storage vessel storing a petroleum liquid with a Reid vapor pressure of less than 6.9 kPa (1.0 psia) provided the maximum true vapor pressure does not exceed 6.9 kPa (1.0 psia).

(2) Each owner or operator of each storage vessel equipped with a vapor recovery and return or disposal system in accordance with the requirements of § 60.112a (a)(3) and (b).

[45 FR 23379, Apr. 4, 1980]

Subpart Kb—Standards of Performance for Volatile Organic Liquid Storage Vessels (Including Petroleum Liquid Storage Vessels) for Which Construction, Reconstruction, or Modification Commenced After July 23, 1984

SOURCE: 52 FR 11429, Apr. 8, 1987, unless otherwise noted.

§ 60.110b Applicability and designation of affected facility.

(a) Except as provided in paragraphs (b), (c), and (d) of this section, the affected facility to which this subpart applies is each storage vessel with a capacity greater than or equal to 40 cubic meters (m^3) that is used to store volatile organic liquids (VOL's) for which construction, reconstruction, or modification is commenced after July 23, 1984.

(b) Except as specified in paragraphs (a) and (b) of § 60.116b, storage vessels with design capacity less than 75 m^3 are exempt from the General Provisions (part 60, subpart A) and from the provisions of this subpart.

(c) Except as specified in paragraphs (a) and (b) of § 60.116b, vessels either with a capacity greater than or equal to 151 m^3 storing a liquid with a maximum true vapor pressure less than 3.5 kPa or with a capacity greater than or equal to 75 m^3 but less than 151 m^3 storing a liquid with a maximum true vapor pressure less than 15.0 kPa are exempt from the General Provisions (part 60, subpart A) and from the provisions of this subpart.

(d) This subpart does not apply to the following:

(1) Vessels at coke oven by-product plants.

(2) Pressure vessels designed to operate in excess of 204.9 kPa and without emissions to the atmosphere.

(3) Vessels permanently attached to mobile vehicles such as trucks, railcars, barges, or ships.

(4) Vessels with a design capacity less than or equal to 1,589.874 m^3 used for petroleum or condensate stored, processed, or treated prior to custody transfer.

(5) Vessels located at bulk gasoline plants.

(6) Storage vessels located at gasoline service stations.

(7) Vessels used to store beverage alcohol.

[52 FR 11429, Apr. 8, 1987, as amended at 54 FR 32973, Aug. 11, 1989]

§ 60.111b Definitions.

Terms used in this subpart are defined in the Act, in subpart A of this part, or in this subpart as follows:

(a) *Bulk gasoline plant* means any gasoline distribution facility that has a gasoline throughput less than or equal to 75,700 liters per day. Gasoline throughput shall be the maximum calculated design throughput as may be limited by compliance with an enforceable condition under Federal requirement or Federal, State or local law, and discoverable by the Administrator and any other person.

(b) *Condensate* means hydrocarbon liquid separated from natural gas that condenses due to changes in the temperature or pressure, or both, and remains liquid at standard conditions.

(c) *Custody transfer* means the transfer of produced petroleum and/or condensate, after processing and/or treatment in the producing operations, from storage vessels or automatic transfer facilities to pipelines or any other forms of transportation.

(d) *Fill* means the introduction of VOL into a storage vessel but not necessarily to complete capacity.

(e) *Gasoline service station* means any site where gasoline is dispensed to motor vehicle fuel tanks from stationary storage tanks.

(f) *Maximum true vapor pressure* means the equilibrium partial pressure exerted by the stored VOL at the temperature equal to the highest calendar-month average of the VOL storage temperature for VOL's stored above or below the ambient temperature or at the local maximum monthly average

temperature as reported by the National Weather Service for VOL's stored at the ambient temperature, as determined:

(1) In accordance with methods described in American Petroleum institute Bulletin 2517, Evaporation Loss From External Floating Roof Tanks, (incorporated by reference—see § 60.17); or

(2) As obtained from standard reference texts; or

(3) As determined by ASTM Method D2879–83 (incorporated by reference—see § 60.17);

(4) Any other method approved by the Administrator.

(g) *Reid vapor pressure* means the absolute vapor pressure of volatile crude oil and volatile nonviscous petroleum liquids except liquified petroleum gases, as determined by ASTM D323–82 (incorporated by reference—see § 60.17).

(h) *Petroleum* means the crude oil removed from the earth and the oils derived from tar sands, shale, and coal.

(i) *Petroleum liquids* means petroleum, condensate, and any finished or intermediate products manufactured in a petroleum refinery.

(j) *Storage vessel* means each tank, reservoir, or container used for the storage of volatile organic liquids but does not include:

(1) Frames, housing, auxiliary supports, or other components that are not directly involved in the containment of liquids or vapors; or

(2) Subsurface caverns or porous rock reservoirs.

(k) *Volatile organic liquid (VOL)* means any organic liquid which can emit volatile organic compounds into the atmosphere except those VOL's that emit only those compounds which the Administrator has determined do not contribute appreciably to the formation of ozone. These compounds are identified in EPA statements on ozone abatement policy for SIP revisions (42 FR 35314, 44 FR 32042, 45 FR 32424, and 45 FR 48941).

(l) *Waste* means any liquid resulting from industrial, commercial, mining or agricultural operations, or from community activities that is discarded or is being accumulated, stored, or physically, chemically, or biologically treated prior to being discarded or recycled.

[52 FR 11429, Apr. 8, 1987, as amended at 54 FR 32973, Aug. 11, 1989]

§ 60.112b Standard for volatile organic compounds (VOC).

(a) The owner or operator of each storage vessel either with a design capacity greater than or equal to 151 m^3 containing a VOL that, as stored, has a maximum true vapor pressure equal to or greater than 5.2 kPa but less than 76.6 kPa or with a design capacity greater than or equal to 75 m^3 but less than 151 m^3 containing a VOL that, as stored, has a maximum true vapor pressure equal to or greater than 27.6 kPa but less than 76.6 kPa, shall equip each storage vessel with one of the following:

(1) A fixed roof in combination with an internal floating roof meeting the following specifications:

(i) The internal floating roof shall rest or float on the liquid surface (but not necessarily in complete contact with it) inside a storage vessel that has a fixed roof. The internal floating roof shall be floating on the liquid surface at all times, except during initial fill and during those intervals when the storage vessel is completely emptied or subsequently emptied and refilled. When the roof is resting on the leg supports, the process of filling, emptying, or refilling shall be continuous and shall be accomplished as rapidly as possible.

(ii) Each internal floating roof shall be equipped with one of the following closure devices between the wall of the storage vessel and the edge of the internal floating roof:

(A) A foam- or liquid-filled seal mounted in contact with the liquid (liquid-mounted seal). A liquid-mounted seal means a foam- or liquid-filled seal mounted in contact with the liquid between the wall of the storage vessel and the floating roof continuously around the circumference of the tank.

(B) Two seals mounted one above the other so that each forms a continuous closure that completely covers the space between the wall of the storage vessel and the edge of the internal floating roof. The lower seal may be

vapor-mounted, but both must be continuous.

(C) A mechanical shoe seal. A mechanical shoe seal is a metal sheet held vertically against the wall of the storage vessel by springs or weighted levers and is connected by braces to the floating roof. A flexible coated fabric (envelope) spans the annular space between the metal sheet and the floating roof.

(iii) Each opening in a noncontact internal floating roof except for automatic bleeder vents (vacuum breaker vents) and the rim space vents is to provide a projection below the liquid surface.

(iv) Each opening in the internal floating roof except for leg sleeves, automatic bleeder vents, rim space vents, column wells, ladder wells, sample wells, and stub drains is to be equipped with a cover or lid which is to be maintained in a closed position at all times (i.e., no visible gap) except when the device is in actual use. The cover or lid shall be equipped with a gasket. Covers on each access hatch and automatic gauge float well shall be bolted except when they are in use.

(v) Automatic bleeder vents shall be equipped with a gasket and are to be closed at all times when the roof is floating except when the roof is being floated off or is being landed on the roof leg supports.

(vi) Rim space vents shall be equipped with a gasket and are to be set to open only when the internal floating roof is not floating or at the manufacturer's recommended setting.

(vii) Each penetration of the internal floating roof for the purpose of sampling shall be a sample well. The sample well shall have a slit fabric cover that covers at least 90 percent of the opening.

(viii) Each penetration of the internal floating roof that allows for passage of a column supporting the fixed roof shall have a flexible fabric sleeve seal or a gasketed sliding cover.

(ix) Each penetration of the internal floating roof that allows for passage of a ladder shall have a gasketed sliding cover.

(2) An external floating roof. An external floating roof means a pontoon-type or double-deck type cover that rests on the liquid surface in a vessel with no fixed roof. Each external floating roof must meet the following specifications:

(i) Each external floating roof shall be equipped with a closure device between the wall of the storage vessel and the roof edge. The closure device is to consist of two seals, one above the other. The lower seal is referred to as the primary seal, and the upper seal is referred to as the secondary seal.

(A) The primary seal shall be either a mechanical shoe seal or a liquid-mounted seal. Except as provided in §60.113b(b)(4), the seal shall completely cover the annular space between the edge of the floating roof and tank wall.

(B) The secondary seal shall completely cover the annular space between the external floating roof and the wall of the storage vessel in a continuous fashion except as allowed in §60.113b(b)(4).

(ii) Except for automatic bleeder vents and rim space vents, each opening in a noncontact external floating roof shall provide a projection below the liquid surface. Except for automatic bleeder vents, rim space vents, roof drains, and leg sleeves, each opening in the roof is to be equipped with a gasketed cover, seal, or lid that is to be maintained in a closed position at all times (i.e., no visible gap) except when the device is in actual use. Automatic bleeder vents are to be closed at all times when the roof is floating except when the roof is being floated off or is being landed on the roof leg supports. Rim vents are to be set to open when the roof is being floated off the roof legs supports or at the manufacturer's recommended setting. Automatic bleeder vents and rim space vents are to be gasketed. Each emergency roof drain is to be provided with a slotted membrane fabric cover that covers at least 90 percent of the area of the opening.

(iii) The roof shall be floating on the liquid at all times (i.e., off the roof leg supports) except during initial fill until the roof is lifted off leg supports and when the tank is completely emptied and subsequently refilled. The process of filling, emptying, or refilling when the roof is resting on the leg supports shall be continuous and shall be accomplished as rapidly as possible.

(3) A closed vent system and control device meeting the following specifications:

(i) The closed vent system shall be designed to collect all VOC vapors and gases discharged from the storage vessel and operated with no detectable emissions as indicated by an instrument reading of less than 500 ppm above background and visual inspections, as determined in part 60, subpart VV, § 60.485(b).

(ii) The control device shall be designed and operated to reduce inlet VOC emissions by 95 percent or greater. If a flare is used as the control device, it shall meet the specifications described in the general control device requirements (§ 60.18) of the General Provisions.

(4) A system equivalent to those described in paragraphs (a)(1), (a)(2), or (a)(3) of this section as provided in § 60.114b of this subpart.

(b) The owner or operator of each storage vessel with a design capacity greater than or equal to 75 m^3 which contains a VOL that, as stored, has a maximum true vapor pressure greater than or equal to 76.6 kPa shall equip each storage vessel with one of the following:

(1) A closed vent system and control device as specified in § 60.112b(a)(3).

(2) A system equivalent to that described in paragraph (b)(1) as provided in § 60.114b of this subpart.

(c) *Site-specific standard for Merck & Co., Inc.'s Stonewall Plant in Elkton, Virginia.* This paragraph applies only to the pharmaceutical manufacturing facility, commonly referred to as the Stonewall Plant, located at Route 340 South, in Elkton, Virginia (''site'').

(1) For any storage vessel that otherwise would be subject to the control technology requirements of paragraphs (a) or (b) of this section, the site shall have the option of either complying directly with the requirements of this subpart, or reducing the site-wide total criteria pollutant emissions cap (total emissions cap) in accordance with the procedures set forth in a permit issued pursuant to 40 CFR 52.2454. If the site chooses the option of reducing the total emissions cap in accordance with the procedures set forth in such permit, the requirements of such permit shall apply in lieu of the otherwise applicable requirements of this subpart for such storage vessel.

(2) For any storage vessel at the site not subject to the requirements of 40 CFR 60.112b (a) or (b), the requirements of 40 CFR 60.116b (b) and (c) and the General Provisions (subpart A of this part) shall not apply.

[52 FR 11429, Apr. 8, 1987, as amended at 62 FR 52641, Oct. 8, 1997]

§ 60.113b Testing and procedures.

The owner or operator of each storage vessel as specified in § 60.112b(a) shall meet the requirements of paragraph (a), (b), or (c) of this section. The applicable paragraph for a particular storage vessel depends on the control equipment installed to meet the requirements of § 60.112b.

(a) After installing the control equipment required to meet § 60.112b(a)(1) (permanently affixed roof and internal floating roof), each owner or operator shall:

(1) Visually inspect the internal floating roof, the primary seal, and the secondary seal (if one is in service), prior to filling the storage vessel with VOL. If there are holes, tears, or other openings in the primary seal, the secondary seal, or the seal fabric or defects in the internal floating roof, or both, the owner or operator shall repair the items before filling the storage vessel.

(2) For Vessels equipped with a liquid-mounted or mechanical shoe primary seal, visually inspect the internal floating roof and the primary seal or the secondary seal (if one is in service) through manholes and roof hatches on the fixed roof at least once every 12 months after initial fill. If the internal floating roof is not resting on the surface of the VOL inside the storage vessel, or there is liquid accumulated on the roof, or the seal is detached, or there are holes or tears in the seal fabric, the owner or operator shall repair the items or empty and remove the storage vessel from service within 45 days. If a failure that is detected during inspections required in this paragraph cannot be repaired within 45 days and if the vessel cannot be

emptied within 45 days, a 30-day extension may be requested from the Administrator in the inspection report required in §60.115b(a)(3). Such a request for an extension must document that alternate storage capacity is unavailable and specify a schedule of actions the company will take that will assure that the control equipment will be repaired or the vessel will be emptied as soon as possible.

(3) For vessels equipped with a double-seal system as specified in §60.112b(a)(1)(ii)(B):

(i) Visually inspect the vessel as specified in paragraph (a)(4) of this section at least every 5 years; or

(ii) Visually inspect the vessel as specified in paragraph (a)(2) of this section.

(4) Visually inspect the internal floating roof, the primary seal, the secondary seal (if one is in service), gaskets, slotted membranes and sleeve seals (if any) each time the storage vessel is emptied and degassed. If the internal floating roof has defects, the primary seal has holes, tears, or other openings in the seal or the seal fabric, or the secondary seal has holes, tears, or other openings in the seal or the seal fabric, or the gaskets no longer close off the liquid surfaces from the atmosphere, or the slotted membrane has more than 10 percent open area, the owner or operator shall repair the items as necessary so that none of the conditions specified in this paragraph exist before refilling the storage vessel with VOL. In no event shall inspections conducted in accordance with this provision occur at intervals greater than 10 years in the case of vessels conducting the annual visual inspection as specified in paragraphs (a)(2) and (a)(3)(ii) of this section and at intervals no greater than 5 years in the case of vessels specified in paragraph (a)(3)(i) of this section.

(5) Notify the Administrator in writing at least 30 days prior to the filling or refilling of each storage vessel for which an inspection is required by paragraphs (a)(1) and (a)(4) of this section to afford the Administrator the opportunity to have an observer present. If the inspection required by paragraph (a)(4) of this section is not planned and the owner or operator could not have known about the inspection 30 days in advance or refilling the tank, the owner or operator shall notify the Administrator at least 7 days prior to the refilling of the storage vessel. Notification shall be made by telephone immediately followed by written documentation demonstrating why the inspection was unplanned. Alternatively, this notification including the written documentation may be made in writing and sent by express mail so that it is received by the Administrator at least 7 days prior to the refilling.

(b) After installing the control equipment required to meet §60.112b(a)(2) (external floating roof), the owner or operator shall:

(1) Determine the gap areas and maximum gap widths, between the primary seal and the wall of the storage vessel and between the secondary seal and the wall of the storage vessel according to the following frequency.

(i) Measurements of gaps between the tank wall and the primary seal (seal gaps) shall be performed during the hydrostatic testing of the vessel or within 60 days of the initial fill with VOL and at least once every 5 years thereafter.

(ii) Measurements of gaps between the tank wall and the secondary seal shall be performed within 60 days of the initial fill with VOL and at least once per year thereafter.

(iii) If any source ceases to store VOL for a period of 1 year or more, subsequent introduction of VOL into the vessel shall be considered an initial fill for the purposes of paragraphs (b)(1)(i) and (b)(1)(ii) of this section.

(2) Determine gap widths and areas in the primary and secondary seals individually by the following procedures:

(i) Measure seal gaps, if any, at one or more floating roof levels when the roof is floating off the roof leg supports.

(ii) Measure seal gaps around the entire circumference of the tank in each place where a 0.32-cm diameter uniform probe passes freely (without forcing or binding against seal) between the seal and the wall of the storage vessel and measure the circumferential distance of each such location.

(iii) The total surface area of each gap described in paragraph (b)(2)(ii) of

this section shall be determined by using probes of various widths to measure accurately the actual distance from the tank wall to the seal and multiplying each such width by its respective circumferential distance.

(3) Add the gap surface area of each gap location for the primary seal and the secondary seal individually and divide the sum for each seal by the nominal diameter of the tank and compare each ratio to the respective standards in paragraph (b)(4) of this section.

(4) Make necessary repairs or empty the storage vessel within 45 days of identification in any inspection for seals not meeting the requirements listed in (b)(4) (i) and (ii) of this section:

(i) The accumulated area of gaps between the tank wall and the mechanical shoe or liquid-mounted primary seal shall not exceed 212 Cm^2 per meter of tank diameter, and the width of any portion of any gap shall not exceed 3.81 cm.

(A) One end of the mechanical shoe is to extend into the stored liquid, and the other end is to extend a minimum vertical distance of 61 cm above the stored liquid surface.

(B) There are to be no holes, tears, or other openings in the shoe, seal fabric, or seal envelope.

(ii) The secondary seal is to meet the following requirements:

(A) The secondary seal is to be installed above the primary seal so that it completely covers the space between the roof edge and the tank wall except as provided in paragraph (b)(2)(iii) of this section.

(B) The accumulated area of gaps between the tank wall and the secondary seal shall not exceed 21.2 cm^2 per meter of tank diameter, and the width of any portion of any gap shall not exceed 1.27 cm.

(C) There are to be no holes, tears, or other openings in the seal or seal fabric.

(iii) If a failure that is detected during inspections required in paragraph (b)(1) of §60.113b(b) cannot be repaired within 45 days and if the vessel cannot be emptied within 45 days, a 30-day extension may be requested from the Administrator in the inspection report required in §60.115b(b)(4). Such extension request must include a demonstration of unavailability of alternate storage capacity and a specification of a schedule that will assure that the control equipment will be repaired or the vessel will be emptied as soon as possible.

(5) Notify the Administrator 30 days in advance of any gap measurements required by paragraph (b)(1) of this section to afford the Administrator the opportunity to have an observer present.

(6) Visually inspect the external floating roof, the primary seal, secondary seal, and fittings each time the vessel is emptied and degassed.

(i) If the external floating roof has defects, the primary seal has holes, tears, or other openings in the seal or the seal fabric, or the secondary seal has holes, tears, or other openings in the seal or the seal fabric, the owner or operator shall repair the items as necessary so that none of the conditions specified in this paragraph exist before filling or refilling the storage vessel with VOL.

(ii) For all the inspections required by paragraph (b)(6) of this section, the owner or operator shall notify the Administrator in writing at least 30 days prior to the filling or refilling of each storage vessel to afford the Administrator the opportunity to inspect the storage vessel prior to refilling. If the inspection required by paragraph (b)(6) of this section is not planned and the owner or operator could not have known about the inspection 30 days in advance of refilling the tank, the owner or operator shall notify the Administrator at least 7 days prior to the refilling of the storage vessel. Notification shall be made by telephone immediately followed by written documentation demonstrating why the inspection was unplanned. Alternatively, this notification including the written documentation may be made in writing and sent by express mail so that it is received by the Administrator at least 7 days prior to the refilling.

(c) The owner or operator of each source that is equipped with a closed vent system and control device as required in §60.112b (a)(3) or (b)(2) (other than a flare) is exempt from §60.8 of the General Provisions and shall meet the following requirements.

(1) Submit for approval by the Administrator as an attachment to the notification required by § 60.7(a)(1) or, if the facility is exempt from § 60.7(a)(1), as an attachment to the notification required by § 60.7(a)(2), an operating plan containing the information listed below.

(i) Documentation demonstrating that the control device will achieve the required control efficiency during maximum loading conditions. This documentation is to include a description of the gas stream which enters the control device, including flow and VOC content under varying liquid level conditions (dynamic and static) and manufacturer's design specifications for the control device. If the control device or the closed vent capture system receives vapors, gases, or liquids other than fuels from sources that are not designated sources under this subpart, the efficiency demonstration is to include consideration of all vapors, gases, and liquids received by the closed vent capture system and control device. If an enclosed combustion device with a minimum residence time of 0.75 seconds and a minimum temperature of 816 °C is used to meet the 95 percent requirement, documentation that those conditions will exist is sufficient to meet the requirements of this paragraph.

(ii) A description of the parameter or parameters to be monitored to ensure that the control device will be operated in conformance with its design and an explanation of the criteria used for selection of that parameter (or parameters).

(2) Operate the closed vent system and control device and monitor the parameters of the closed vent system and control device in accordance with the operating plan submitted to the Administrator in accordance with paragraph (c)(1) of this section, unless the plan was modified by the Administrator during the review process. In this case, the modified plan applies.

(d) The owner or operator of each source that is equipped with a closed vent system and a flare to meet the requirements in § 60.112b (a)(3) or (b)(2) shall meet the requirements as specified in the general control device requirements, § 60.18 (e) and (f).

[52 FR 11429, Apr. 8, 1987, as amended at 54 FR 32973, Aug. 11, 1989]

§ 60.114b Alternative means of emission limitation.

(a) If, in the Administrator's judgment, an alternative means of emission limitation will achieve a reduction in emissions at least equivalent to the reduction in emissions achieved by any requirement in § 60.112b, the Administrator will publish in the FEDERAL REGISTER a notice permitting the use of the alternative means for purposes of compliance with that requirement.

(b) Any notice under paragraph (a) of this section will be published only after notice and an opportunity for a hearing.

(c) Any person seeking permission under this section shall submit to the Administrator a written application including:

(1) An actual emissions test that uses a full-sized or scale-model storage vessel that accurately collects and measures all VOC emissions from a given control device and that accurately simulates wind and accounts for other emission variables such as temperature and barometric pressure.

(2) An engineering evaluation that the Administrator determines is an accurate method of determining equivalence.

(d) The Administrator may condition the permission on requirements that may be necessary to ensure operation and maintenance to achieve the same emissions reduction as specified in § 60.112b.

§ 60.115b Reporting and recordkeeping requirements.

The owner or operator of each storage vessel as specified in § 60.112b(a) shall keep records and furnish reports as required by paragraphs (a), (b), or (c) of this section depending upon the control equipment installed to meet the requirements of § 60.112b. The owner or operator shall keep copies of all reports and records required by this section, except for the record required by (c)(1), for at least 2 years. The record required by (c)(1) will be kept for the life of the control equipment.

(a) After installing control equipment in accordance with § 60.112b(a)(1) (fixed roof and internal floating roof), the owner or operator shall meet the following requirements.

(1) Furnish the Administrator with a report that describes the control equipment and certifies that the control equipment meets the specifications of § 60.112b(a)(1) and § 60.113b(a)(1). This report shall be an attachment to the notification required by § 60.7(a)(3).

(2) Keep a record of each inspection performed as required by § 60.113b (a)(1), (a)(2), (a)(3), and (a)(4). Each record shall identify the storage vessel on which the inspection was performed and shall contain the date the vessel was inspected and the observed condition of each component of the control equipment (seals, internal floating roof, and fittings).

(3) If any of the conditions described in § 60.113b(a)(2) are detected during the annual visual inspection required by § 60.113b(a)(2), a report shall be furnished to the Administrator within 30 days of the inspection. Each report shall identify the storage vessel, the nature of the defects, and the date the storage vessel was emptied or the nature of and date the repair was made.

(4) After each inspection required by § 60.113b(a)(3) that finds holes or tears in the seal or seal fabric, or defects in the internal floating roof, or other control equipment defects listed in § 60.113b(a)(3)(ii), a report shall be furnished to the Administrator within 30 days of the inspection. The report shall identify the storage vessel and the reason it did not meet the specifications of § 61.112b(a)(1) or § 60.113b(a)(3) and list each repair made.

(b) After installing control equipment in accordance with § 61.112b(a)(2) (external floating roof), the owner or operator shall meet the following requirements.

(1) Furnish the Administrator with a report that describes the control equipment and certifies that the control equipment meets the specifications of § 60.112b(a)(2) and § 60.113b(b)(2), (b)(3), and (b)(4). This report shall be an attachment to the notification required by § 60.7(a)(3).

(2) Within 60 days of performing the seal gap measurements required by § 60.113b(b)(1), furnish the Administrator with a report that contains:

(i) The date of measurement.

(ii) The raw data obtained in the measurement.

(iii) The calculations described in § 60.113b (b)(2) and (b)(3).

(3) Keep a record of each gap measurement performed as required by § 60.113b(b). Each record shall identify the storage vessel in which the measurement was performed and shall contain:

(i) The date of measurement.

(ii) The raw data obtained in the measurement.

(iii) The calculations described in § 60.113b (b)(2) and (b)(3).

(4) After each seal gap measurement that detects gaps exceeding the limitations specified by § 60.113b(b)(4), submit a report to the Administrator within 30 days of the inspection. The report will identify the vessel and contain the information specified in paragraph (b)(2) of this section and the date the vessel was emptied or the repairs made and date of repair.

(c) After installing control equipment in accordance with § 60.112b (a)(3) or (b)(1) (closed vent system and control device other than a flare), the owner or operator shall keep the following records.

(1) A copy of the operating plan.

(2) A record of the measured values of the parameters monitored in accordance with § 60.113b(c)(2).

(d) After installing a closed vent system and flare to comply with § 60.112b, the owner or operator shall meet the following requirements.

(1) A report containing the measurements required by § 60.18(f) (1), (2), (3), (4), (5), and (6) shall be furnished to the Administrator as required by § 60.8 of the General Provisions. This report shall be submitted within 6 months of the initial start-up date.

(2) Records shall be kept of all periods of operation during which the flare pilot flame is absent.

(3) Semiannual reports of all periods recorded under § 60.115b(d)(2) in which the pilot flame was absent shall be furnished to the Administrator.

§ 60.116b Monitoring of operations.

(a) The owner or operator shall keep copies of all records required by this section, except for the record required by paragraph (b) of this section, for at least 2 years. The record required by paragraph (b) of this section will be kept for the life of the source.

(b) The owner or operator of each storage vessel as specified in § 60.110b(a) shall keep readily accessible records showing the dimension of the storage vessel and an analysis showing the capacity of the storage vessel. Each storage vessel with a design capacity less than 75 m^3 is subject to no provision of this subpart other than those required by this paragraph.

(c) Except as provided in paragraphs (f) and (g) of this section, the owner or operator of each storage vessel either with a design capacity greater than or equal to 151 m^3 storing a liquid with a maximum true vapor pressure greater than or equal to 3.5 kPa or with a design capacity greater than or equal to 75 m^3 but less than 151 m^3 storing a liquid with a maximum true vapor pressure greater than or equal to 15.0 kPa shall maintain a record of the VOL stored, the period of storage, and the maximum true vapor pressure of that VOL during the respective storage period.

(d) Except as provided in paragraph (g) of this section, the owner or operator of each storage vessel either with a design capacity greater than or equal to 151 m^3 storing a liquid with a maximum true vapor pressure that is normally less than 5.2 kPa or with a design capacity greater than or equal to 75 m^3 but less than 151 m^3 storing a liquid with a maximum true vapor pressure that is normally less than 27.6 kPa shall notify the Administrator within 30 days when the maximum true vapor pressure of the liquid exceeds the respective maximum true vapor vapor pressure values for each volume range.

(e) Available data on the storage temperature may be used to determine the maximum true vapor pressure as determined below.

(1) For vessels operated above or below ambient temperatures, the maximum true vapor pressure is calculated based upon the highest expected calendar-month average of the storage temperature. For vessels operated at ambient temperatures, the maximum true vapor pressure is calculated based upon the maximum local monthly average ambient temperature as reported by the National Weather Service.

(2) For crude oil or refined petroleum products the vapor pressure may be obtained by the following:

(i) Available data on the Reid vapor pressure and the maximum expected storage temperature based on the highest expected calendar-month average temperature of the stored product may be used to determine the maximum true vapor pressure from nomographs contained in API Bulletin 2517 (incorporated by reference—see § 60.17), unless the Administrator specifically requests that the liquid be sampled, the actual storage temperature determined, and the Reid vapor pressure determined from the sample(s).

(ii) The true vapor pressure of each type of crude oil with a Reid vapor pressure less than 13.8 kPa or with physical properties that preclude determination by the recommended method is to be determined from available data and recorded if the estimated maximum true vapor pressure is greater than 3.5 kPa.

(3) For other liquids, the vapor pressure:

(i) May be obtained from standard reference texts, or

(ii) Determined by ASTM Method D2879–83 (incorporated by reference—see § 60.17); or

(iii) Measured by an appropriate method approved by the Administrator; or

(iv) Calculated by an appropriate method approved by the Administrator.

(f) The owner or operator of each vessel storing a waste mixture of indeterminate or variable composition shall be subject to the following requirements.

(1) Prior to the initial filling of the vessel, the highest maximum true vapor pressure for the range of anticipated liquid compositions to be stored will be determined using the methods described in paragraph (e) of this section.

(2) For vessels in which the vapor pressure of the anticipated liquid composition is above the cutoff for monitoring but below the cutoff for controls as defined in §60.112b(a), an initial physical test of the vapor pressure is required; and a physical test at least once every 6 months thereafter is required as determined by the following methods:

(i) ASTM Method D2879–83 (incorporated by reference—see § 60.17); or

(ii) ASTM Method D323–82 (incorporated by reference—see §60.17); or

(iii) As measured by an appropriate method as approved by the Administrator.

(g) The owner or operator of each vessel equipped with a closed vent system and control device meeting the specifications of § 60.112b is exempt from the requirements of paragraphs (c) and (d) of this section.

§ 60.117b Delegation of authority.

(a) In delegating implementation and enforcement authority to a State under section 111(c) of the Act, the authorities contained in paragraph (b) of this section shall be retained by the Administrator and not transferred to a State.

(b) Authorities which will not be delegated to States: §§ 60.111b(f)(4), 60.114b, 60.116b(e)(3)(iii), 60.116b(e)(3)(iv), and 60.116b(f)(2)(iii).

[52 FR 11429, Apr. 8, 1987, as amended at 52 FR 22780, June 16, 1987]

Subpart L—Standards of Performance for Secondary Lead Smelters

§ 60.120 Applicability and designation of affected facility.

(a) The provisions of this subpart are applicable to the following affected facilities in secondary lead smelters: Pot furnaces of more than 250 kg (550 lb) charging capacity, blast (cupola) furnaces, and reverberatory furnaces.

(b) Any facility under paragraph (a) of this section that commences construction or modification after June 11, 1973, is subject to the requirements of this subpart.

[42 FR 37937, July 25, 1977]

§ 60.121 Definitions.

As used in this subpart, all terms not defined herein shall have the meaning given them in the Act and in subpart A of this part.

(a) *Reverberatory furnace* includes the following types of reverberatory furnaces: stationary, rotating, rocking, and tilting.

(b) *Secondary lead smelter* means any facility producing lead from a leadbearing scrap material by smelting to the metallic form.

(c) *Lead* means elemental lead or alloys in which the predominant component is lead.

[39 FR 9317, Mar. 8, 1974; 39 FR 13776, Apr. 17, 1974]

§ 60.122 Standard for particulate matter.

(a) On and after the date on which the performance test required to be conducted by § 60.8 is completed, no owner or operator subject to the provisions of this subpart shall discharge or cause the discharge into the atmosphere from a blast (cupola) or reverberatory furnace any gases which:

(1) Contain particulate matter in excess of 50 mg/dscm (0.022 gr/dscf).

(2) Exhibit 20 percent opacity or greater.

(b) On and after the date on which the performance test required to be conducted by § 60.8 is completed, no owner or operator subject to the provisions of this subpart shall discharge or cause the discharge into the atmosphere from any pot furnace any gases which exhibit 10 percent opacity or greater.

[39 FR 9317, Mar. 8, 1974, as amended at 40 FR 46259, Oct. 6, 1975]

§ 60.123 Test methods and procedures.

(a) In conducting the performance tests required in § 60.8, the owner or operator shall use as reference methods and procedures the test methods in Appendix A of this part or other methods and procedures as specified in this section, except as provided in § 60.8(b).

(b) The owner or operator shall determine compliance with the particulate matter standards in § 60.122 as follows:

(1) Method 5 shall be used to determine the particulate matter concentration during representative periods of furnace operation, including charging and tapping. The sampling time and sample volume for each run shall be at least 60 minutes and 0.90 dscm (31.8 dscf).

(2) Method 9 and the procedures in § 60.11 shall be used to determine opacity.

[54 FR 6667, Feb. 14, 1989]

Subpart M—Standards of Performance for Secondary Brass and Bronze Production Plants

§ 60.130 Applicability and designation of affected facility.

(a) The provisions of this subpart are applicable to the following affected facilities in secondary brass or bronze production plants: Reverberatory and electric furnaces of 1,000 kg (2205 lb) or greater production capacity and blast (cupola) furnaces of 250 kg/h (550 lb/h) or greater production capacity. Furnaces from which molten brass or bronze are cast into the shape of finished products, such as foundry furnaces, are not considered to be affected facilities.

(b) Any facility under paragraph (a) of this section that commences construction or modification after June 11, 1973, is subject to the requirements of this subpart.

[42 FR 37937, July 25, 1977, as amended at 49 FR 43618, Oct. 30, 1984]

§ 60.131 Definitions.

As used in this subpart, all terms not defined herein shall have the meaning given them in the Act and in subpart A of this part.

(a) *Brass or bronze* means any metal alloy containing copper as its predominant constituent, and lesser amounts of zinc, tin, lead, or other metals.

(b) *Reverberatory furnace* includes the following types of reverberatory furnaces: Stationary, rotating, rocking, and tilting.

(c) *Electric furnace* means any furnace which uses electricity to produce over 50 percent of the heat required in the production of refined brass or bronze.

(d) *Blast furnace* means any furnace used to recover metal from slag.

[39 FR 9318, Mar. 8, 1974]

§ 60.132 Standard for particulate matter.

(a) On and after the date on which the performance test required to be conducted by § 60.8 is completed, no owner or operator subject to the provisions of this subpart shall discharge or cause the discharge into the atmosphere from a reverberatory furnace any gases which:

(1) Contain particulate matter in excess of 50 mg/dscm (0.022 gr/dscf).

(2) Exhibit 20 percent opacity or greater.

(b) On and after the date on which the performance test required to be conducted by § 60.8 is completed, no owner or operator subject to the provisions of this subpart shall discharge or cause the discharge into the atmosphere from any blast (cupola) or electric furnace any gases which exhibit 10 percent opacity or greater.

[39 FR 9318, Mar. 8, 1974, as amended at 40 FR 46259, Oct. 6, 1975]

§ 60.133 Test methods and procedures.

(a) In conducting performance tests required in § 60.8, the owner or operator shall use as reference methods and procedures the test methods in Appendix A of this part or other methods and procedures as specified in this section, except as provided in § 60.8(b).

(b) The owner or operator shall determine compliance with the particulate matter standards in § 60.132 as follows:

(1) Method 5 shall be used to determine the particulate matter concentration during representative periods of charging and refining, but not during pouring of the heat. The sampling time and sample volume for each run shall be at least 120 minutes and 1.80 dscm (63.6 dscf).

(2) Method 9 and the procedures in § 60.11 shall be used to determine opacity.

[54 FR 6667, Feb. 14, 1989]

Subpart N—Standards of Performance for Primary Emissions from Basic Oxygen Process Furnaces for Which Construction is Commenced After June 11, 1973

§ 60.140 Applicability and designation of affected facility.

(a) The affected facility to which the provisions of this subpart apply is each basic oxygen process furnace.

(b) Any facility under paragraph (a) of this section that commences construction or modification after June 11, 1973, is subject to the requirements of this subpart.

[42 FR 37937, July 25, 1977]

§ 60.141 Definitions.

As used in this subpart, all terms not defined herein shall have the meaning given them in the Act and in subpart A of this part.

(a) *Basic oxygen process furnace (BOPF)* means any furnace with a refractory lining in which molten steel is produced by charging scrap metal, molten iron, and flux materials or alloy additions into a vessel and introducing a high volume of oxygen-rich gas. Open hearth, blast, and reverberatory furnaces are not included in this definition.

(b) *Primary emissions* means particulate matter emissions from the BOPF generated during the steel production cycle and captured by the BOPF primary control system.

(c) *Primary oxygen blow* means the period in the steel production cycle of a BOPF during which a high volume of oxygen-rich gas is introduced to the bath of molten iron by means of a lance inserted from the top of the vessel or through tuyeres in the bottom or through the bottom and sides of the vessel. This definition does not include any additional or secondary oxygen blows made after the primary blow or the introduction of nitrogen or other inert gas through tuyeres in the bottom or bottom and sides of the vessel.

(d) *Steel production cycle* means the operations conducted within the BOPF steelmaking facility that are required to produce each batch of steel and includes the following operations: scrap charging, preheating (when used), hot metal charging, primary oxygen blowing, sampling (vessel turndown and turnup), additional oxygen blowing (when used), tapping, and deslagging. This definition applies to an affected facility constructed, modified, or reconstructed after January 20, 1983. For an affected facility constructed, modified, or reconstructed after June 11, 1973, but on or before January 20, 1983, *steel production cycle* means the operations conducted within the BOPF steelmaking facility that are required to produce each batch of steel and includes the following operations: scrap charging, preheating (when used), hot metal charging, primary oxygen blowing, sampling (vessel turndown and turnup), additional oxygen blowing (when used), and tapping.

[39 FR 9318, Mar. 8, 1974, as amended at 51 FR 160, Jan. 2, 1986]

§ 60.142 Standard for particulate matter.

(a) Except as provided under paragraph (b) of this section, on and after the date on which the performance test required to be conducted by § 60.8 is completed, no owner or operator subject to the provisions of this subpart shall discharge or cause the discharge into the atmosphere from any affected facility any gases which:

(1) Contain particulate matter in excess of 50 mg/dscm (0.022 gr/dscf).

(2) Exit from a control device and exhibit 10 percent opacity or greater, except that an opacity of greater than 10 percent but less than 20 percent may occur once per steel production cycle.

(b) For affected facilities constructed, modified, or reconstructed after January 20, 1983, the following limits shall apply:

(1) On or after the date on which the performance test under § 60.8 is required to be completed, no owner or operator of an affected facility for which open hooding is the method for controlling primary emissions shall cause to be discharged to the atmosphere any gases that:

(i) Contain particulate matter in excess of 50 mg/dscm (0.022 gr/dscf), as measured for the primary oxygen blow.

(ii) Exit from a control device not used solely for the collection of secondary emissions, as defined in § 60.141a, and exhibit 10 percent opacity or greater, except that an opacity greater than 10 percent but less than 20 percent may occur once per steel production cycle.

(2) On or after the date on which the performance test required by § 60.8 is completed, no owner or operator of an affected facility for which closed hooding is the method for controlling primary emissions shall cause to be discharged into the atmosphere any gases that:

(i) Contain particulate matter in excess of 68 mg/dscm (0.030 gr/dscf), as measured for the primary oxygen blow.

(ii) Exit from a control device not used solely for the collection of secondary emissions, as defined in § 60.141a, and exhibit 10 percent opacity or greater, except that an opacity greater than 10 percent but less than 20 percent may occur once per steel production cycle.

(c) On and after the date on which the performance test required by § 60.8 is completed, each owner or operator of an affected facility subject to paragraph (b) of this section shall operate the primary gas cleaning system during any reblow in a manner identical to operation during the primary oxygen blow.

[39 FR 9318, Mar. 8, 1974, as amended at 43 FR 15602, Apr. 13, 1978; 51 FR 161, Jan. 2, 1986]

§ 60.143 Monitoring of operations.

(a) The owner or operator of an affected facility shall maintain a single time-measuring instrument which shall be used in recording daily the time and duration of each steel production cycle, and the time and duration of any diversion of exhaust gases from the main stack servicing the BOPF.

(b) The owner or operator of any affected facility that uses venturi scrubber emission control equipment shall install, calibrate, maintain, and continuously operate monitoring devices as follows:

(1) A monitoring device for the continuous measurement of the pressure loss through the venturi constriction of the control equipment. The monitoring device is to be certified by the manufacturer to be accurate within ±250 Pa (±1 inch water).

(2) A monitoring device for the continual measurement of the water supply pressure to the control equipment. The monitoring device is to be certified by the manufacturer to be accurate within ±5 percent of the design water supply pressure. The monitoring device's pressure sensor or pressure tap must be located close to the water discharge point. The Administrator must be consulted for approval in advance of selecting alternative locations for the pressure sensor or tap.

(3) All monitoring devices shall be synchronized each day with the time-measuring instrument used under paragraph (a) of this section. The chart recorder error directly after synchronization shall not exceed 0.08 cm (1/32 inch).

(4) All monitoring devices shall use chart recorders which are operated at a minimum chart speed of 3.8 cm/hr (1.5 in/hr).

(5) All monitoring devices are to be recalibrated annually, and at other times as the Administrator may require, in accordance with the procedures under § 60.13(b).

(c) Any owner or operator subject to the requirements of paragraph (b) of this section shall report to the Administrator, on a semiannual basis, all measurements over any 3-hour period that average more than 10 percent below the average levels maintained during the most recent performance test conducted under § 60.8 in which the affected facility demonstrated compliance with the mass standards under § 60.142(a)(1), (b)(1)(i) or (b)(2)(i). The accuracy of the respective measurements, not to exceed the values specified in paragraphs (b)(1) and (b)(2) of this section, may be taken into consideration when determining the measurement results that must be reported.

[43 FR 15602, Apr. 13, 1978, as amended at 51 FR 161, Jan. 2, 1986; 54 FR 6667, Feb. 14, 1989]

§ 60.144 Test methods and procedures.

(a) In conducting the performance tests required in § 60.8, the owner or operator shall use as reference methods and procedures the test methods in Appendix A of this part or other methods

and procedures as specified in this section, except as provided in § 60.8(b).

(b) The owner or operator shall determine compliance with the particulate matter standards in § 60.142 as follows:

(1) The time-measuring instrument of § 60.143 shall be used to document the time and duration of each steel production cycle and each diversion period during each run.

(2) Method 5 shall be used to determine the particulate matter concentration. The sampling time and sample volume for each run shall be at least 60 minutes and 1.50 dscm (53 dscf). Sampling shall be discontinued during periods of diversions.

(i) For affected facilities that commenced construction, modification, or reconstruction on or before January 20, 1983, the sampling for each run shall continue for an integral number of steel production cycles. A cycle shall start at the beginning of either the scrap preheat or the oxygen blow and shall terminate immediately before tapping.

(ii) For affected facilities that commenced construction, modification, or reconstruction after January 20, 1983, the sampling for each run shall continue for an integral number of primary oxygen blows.

(3) Method 9 and the procedures in § 60.11 shall be used to determine opacity. Observations taken during a diversion period shall not be used in determining compliance with the opacity standard. Opacity observations taken at 15-second intervals immediately before and after a diversion of exhaust gases from the stack may be considered to be consecutive for the purpose of computing an average opacity for a 6-minute period.

(c) To comply with § 60.143(c), the owner or operator shall use the monitoring devices of § 60.143(b) (1) and (2) during the particulate runs to determine the 3-hour averages of the required measurements.

[54 FR 6667, Feb. 14, 1989]

Subpart Na—Standards of Performance for Secondary Emissions from Basic Oxygen Process Steelmaking Facilities for Which Construction is Commenced After January 20, 1983

SOURCE: 51 FR 161, Jan. 2, 1986, unless otherwise noted.

§ 60.140a Applicability and designation of affected facilities.

(a) The provisions of this subpart apply to the following affected facilities in an iron and steel plant: top-blown BOPF's and hot metal transfer stations and skimming stations used with bottom-blown or top-blown BOPF's.

(b) This subpart applies to any facility identified in paragraph (a) of this section that commences construction, modification, or reconstruction after January 20, 1983.

(c) Any BOPF subject to the provisions of this subpart is subject to those provisions of subpart N of this part applicable to affected facilities commencing construction, modification or reconstruction after January 20, 1983.

§ 60.141a Definitions.

All terms in this subpart not defined below are given the same meaning as in the Clean Air Act as amended or in subpart A of this part.

Basic oxygen process furnace (BOPF) means any furnace with a refractory lining in which molten steel is produced by charging scrap metal, molten iron, and flux materials or alloy additions into a vessel and by introducing a high volume of oxygen-rich gas. Open hearth, blast, and reverberatory furnaces are not included in this definition.

Bottom-blown furnace means any BOPF in which oxygen and other combustion gases are introduced to the bath of molten iron through tuyeres in the bottom of the vessel or through tuyeres in the bottom and sides of the vessel.

Fume suppression system means the equipment comprising any system used to inhibit the generation of emissions from steelmaking facilities with an inert gas, flame, or steam blanket applied to the surface of molten iron or steel.

Hot metal transfer station means the facility where molten iron is emptied from the railroad torpedo car or hot metal car to the shop ladle. This includes the transfer of molten iron from the torpedo car or hot metal car to a mixer (or other intermediate vessel) and from a mixer (or other intermediate vessel) to the ladle. This facility is also known as the reladling station or ladle transfer station.

Primary emission control system means the combination of equipment used for the capture and collection of primary emissions (e.g., an open hood capture system used in conjunction with a particulate matter cleaning device such as an electrostatic precipitator or a closed hood capture system used in conjunction with a particulate matter cleaning device such as a scrubber).

Primary emissions means particulate matter emissions from the BOPF generated during the steel production cycle which are captured by, and do not thereafter escape from, the BOPF primary control system.

Primary oxygen blow means the period in the steel production cycle of a BOPF during which a high volume of oxygen-rich gas is introduced to the bath of molten iron by means of a lance inserted from the top of the vessel. This definition does not include any additional, or secondary, oxygen blows made after the primary blow.

Secondary emission control system means the combination of equipment used for the capture and collection of secondary emissions (e.g.,

(1) An open hood system for the capture and collection of primary and secondary emissions from the BOPF, with local hooding ducted to a secondary emission collection device such as a baghouse for the capture and collection of emissions from the hot metal transfer and skimming station; or

(2) An open hood system for the capture and collection of primary and secondary emissions from the furnace, plus a furnace enclosure with local hooding ducted to a secondary emission collection device, such as a baghouse, for additional capture and collection of secondary emissions from the furnace, with local hooding ducted to a secondary emission collection device, such as a baghouse, for the capture and collection of emissions from hot metal transfer and skimming station; or

(3) A furnace enclosure with local hooding ducted to a secondary emission collection device such as a baghouse for the capture and collection of secondary emissions from a BOPF controlled by a closed hood primary emission control system, with local hooding ducted to a secondary emission collection device, such as a baghouse, for the capture and collection of emissions from hot metal transfer and skimming stations).

Secondary emissions means particulate matter emissions that are not captured by the BOPF primary control system, including emissions from hot metal transfer and skimming stations. This definition also includes particulate matter emissions that escape from openings in the primary emission control system, such as from lance hole openings, gaps or tears in the ductwork of the primary emission control system, or leaks in hoods.

Skimming station means the facility where slag is mechanically raked from the top of the bath of molten iron.

Steel production cycle means the operations conducted within the BOPF steelmaking facility that are required to produce each batch of steel, including the following operations: scrap charging, preheating (when used), hot metal charging, primary oxygen blowing, sampling (vessel turndown and turnup), additional oxygen blowing (when used), tapping, and deslagging. Hot metal transfer and skimming operations for the next steel production cycle are also included when the hot metal transfer station or skimming station is an affected facility.

Top-blown furnace means any BOPF in which oxygen is introduced to the bath of molten iron by means of an oxygen lance inserted from the top of the vessel.

§ 60.142a Standards for particulate matter.

(a) Except as provided under paragraphs (b) and (c) of this section, on and after the date on which the performance test under § 60.8 is required to be completed, no owner or operator subject to the provisions of this subpart shall cause to be discharged into the atmosphere from any affected facility any secondary emissions that:

(1) Exit from the BOPF shop roof monitor (or other building openings) and exhibit greater than 10 percent opacity during the steel production cycle of any top-blown BOPF or during hot metal transfer or skimming operations for any bottom-blown BOPF; except that an opacity greater than 10 percent but less than 20 percent may occur once per steel production cycle.

(2) Exit from a control device used solely for the collection of secondary emissions from a top-blown BOPF or from hot metal transfer or skimming for a top-blown or a bottom-blown BOPF and contain particulate matter in excess of 23 mg/dscm (0.010 gr/dscf).

(3) Exit from a control device used solely for the collecton of secondary emissions from a top-blown BOPF or from hot metal transfer or skimming for a top-blown or a bottom-blown BOPF and exhibit more than 5 percent opacity.

(b) A fume suppression system used to control secondary emissions from an affected facility is not subject to paragraphs (a)(2) and (a)(3) of this section.

(c) A control device used to collect both primary and secondary emissions from a BOPF is not subject to paragraphs (a)(2) and (a)(3) of this section.

§ 60.143a Monitoring of operations.

(a) Each owner or operator of an affected facility shall install, calibrate, operate, and maintain a monitoring device that continually measures and records for each steel production cycle the various rates or levels of exhaust ventilation at each phase of the cycle through each duct of the secondary emission capture system. The monitoring device or devices are to be placed at locations near each capture point of the secondary emission capture system to monitor the exhaust ventilation rates or levels adequately, or in alternative locations approved in advance by the Administrator.

(b) If a chart recorder is used, the owner or operator shall use chart recorders that are operated at a minimum chart speed of 3.8 cm/hr (1.5 in./hr).

(c) All monitoring devices are to be certified by the manufacturer to be accurate to within ±10 percent compared to EPA Reference Method 2. The owner or operator shall recalibrate and check the device(s) annually and at other times as the Administrator may require, in accordance with the written instructions of the manufacturer and by comparing the device against EPA Reference Method 2.

(d) Each owner or operator subject to the requirements of paragraph (a) of this section shall report on a semiannual basis all measurements of exhaust ventilation rates or levels over any 3-hour period that average more than 10 percent below the average rates or levels of exhaust ventilation maintained during the most recent performance test conducted under § 60.8 in which the affected facility demonstrated compliance with the standard under § 60.142a(a)(2). The accuracy of the respective measurements, not to exceed the values specified in paragraph (c) of this section, may be considered when determining the measurement results that must be reported.

(e) If a scrubber primary emission control device is used to collect secondary emissions, the owner or operator shall report on a semiannual basis all measurements of exhaust ventilation rate over any 3-hour period that average more than 10 percent below the average levels maintained during the most recent performance test conducted under § 60.8 in which the affected facility demonstrated compliance with the standard under § 60.142(a)(1).

§ 60.144a Test methods and procedures.

(a) In conducting the performance tests required in § 60.8, the owner or operator shall use as reference methods and procedures the test methods in Appendix A of this part or other methods and procedures as specified in this section, except as provided in § 60.8(b).

(b) The owner or operator shall determine compliance with the particulate matter standards in § 60.142a as follows:

(1) Start and end times of each steel production cycle during each run shall be recorded (see § 60.145a (c) and (d) for the definitions of start and end times of a cycle).

(2) Method 5 shall be used to determine the particulate matter concentration. Sampling shall be conducted only during the steel production cycle and for a sufficient number of steel production cycles to obtain a total sample volume of at least 5.67 dscm (200 dscf) for each run.

(3) Method 9 and the procedures of § 60.11 shall be used to determine opacity, except sections 2.4 and 2.5 of Method 9 shall be replaced with the following instructions for recording observations and reducing data:

(i) *Section 2.4.* Opacity observations shall be recorded to the nearest 5 percent at 15-second intervals. During the initial performance test conducted pursuant to § 60.8, observations shall be made and recorded in this manner for a minimum of three steel production cycles. During any subsequent compliance test, observations may be made for any number of steel production cycles, although, where conditions permit, observations will generally be made for a minimum of three steel production cycles.

(ii) *Section 2.5.* Opacity shall be determined as an average of 12 consecutive observations recorded at 15-second intervals. For each steel production cycle, divide the observations recorded into sets of 12 consecutive observations. Sets need not be consecutive in time, and in no case shall two sets overlap. For each set of 12 observations, calculate the average by summing the opacity of 12 consecutive observations and dividing this sum by 12.

(c) In complying with the requirements of § 60.143a(c), the owner or operator shall conduct an initial test as follows:

(1) For devices that monitor and record the exhaust ventilation rate, compare velocity readings recorded by the monitoring device against the velocity readings obtained by Method 2. Take Method 2 readings at a point or points that would properly characterize the monitoring device's performance and that would adequately reflect the various rates of exhaust ventilation. Obtain readings at sufficient intervals to obtain 12 pairs of readings for each duct of the secondary emission capture system. Compare the averages of the two sets to determine whether the monitoring device velocity is within ±10 percent of the Method 2 average.

(2) For devices that monitor the level of exhaust ventilation and record only step changes when a set point rate is reached, compare step changes recorded by the monitoring device against the velocity readings obtained by Method 2. Take Method 2 readings at a point or points that would properly characterize the performance of the monitoring device and that would adequately reflect the various rates of exhaust ventilation. Obtain readings at sufficient intervals to obtain 12 pairs of readings for each duct of the secondary emission capture system. Compare the averages of the two sets to determine whether the monitoring device step change is within ±10 percent of the setpoint rate.

(d) To comply with § 60.143a (d) or (e), the owner or operator shall use the monitoring device of § 60.143a(a) to determine the exhaust ventilation rates or levels during the particulate matter runs and to determine a 3-hour average.

[51 FR 161, Jan. 2, 1986, as amended at 54 FR 6667, Feb. 14, 1989]

§ 60.145a Compliance provisions.

(a) When determining compliance with mass and visible emission limits specified in § 60.142a(a) (2) and (3), the owner or operator of a BOPF shop that normally operates two furnaces with overlapping cycles may elect to operate only one furnace. If an owner or operator chooses to shut down one furnace, he shall be allowed a reasonable time period to adjust his production schedule before the compliance tests are conducted. The owner or operator of an affected facility may also elect to suspend shop operations not subject to this subpart during compliance testing.

(b) During compliance testing for mass and visible emission standards, if an owner or operator elects to shut

down one furnace in a shop that normally operates two furnaces with overlapping cycles, the owner or operator shall operate the secondary emission control system for the furnace being tested at exhaust ventilation rates or levels for each duct of the secondary emission control system that are appropriate for single-furnace operation. Following the compliance test, the owner or operator shall operate the secondary emission control system at exhaust ventilation rates or levels for each duct of the system that are no lower than 90 percent of the exhaust ventilation values established during the most recent compliance test.

(c) For the purpose of determining compliance with visible and mass emission standards, a steel production cycle begins when the scrap or hot metal is charged to the vessel (whichever operation occurs first) and terminates 3 minutes after slag is emptied from the vessel into the slag pot. Consecutive steel production cycles are not required for the purpose of determining compliance. Where a hot metal transfer or skimming station is an affected facility, the steel production cycle also includes the hot metal transfer or skimming operation for the next steel production cycle for the affected vessel. Visible emission observations for both hot metal transfer and skimming operations begin with the start of the operation and terminate 3 minutes after completion of the operation.

(d) For the purpose of determining compliance with visible emission standards specified in §60.142a(a) (1) and (3), the starting and stopping times of regulated process operations shall be determined and the starting and stopping times of visible emissions data sets shall be determined accordingly.

(e) To determine compliance with §60.142a(a)(1), select the data sets yielding the highest and second highest 3-minute average opacities for each steel production cycle. Compliance is achieved if the highest 3-minute average for each cycle observed is less than 20 percent and the second highest 3-minute average is 10 percent or less.

(f) To determine compliance with §60.142(a)(2), determine the concentration of particulate matter in exhaust gases exiting the secondary emission collection device with Reference Method 5. Compliance is achieved if the concentration of particulate matter does not exceed 23 mg/dscm (0.010 gr/dscf).

(g) To determine compliance with §60.142a(a)(3), construct consecutive 3-minute averages for each steel production cycle. Compliance is achieved if no 3-minute average is more than 5 percent.

Subpart O—Standards of Performance for Sewage Treatment Plants

§ 60.150 Applicability and designation of affected facility.

(a) The affected facility is each incinerator that combusts wastes containing more than 10 percent sewage sludge (dry basis) produced by municipal sewage treatment plants, or each incinerator that charges more than 1000 kg (2205 lb) per day municipal sewage sludge (dry basis).

(b) Any facility under paragraph (a) of this section that commences construction or modification after June 11, 1973, is subject to the requirements of this subpart.

[42 FR 58521, Nov. 10, 1977]

§ 60.151 Definitions.

As used in this subpart, all terms not defined herein shall have the meaning given them in the Act and in subpart A of this part.

[39 FR 9319, Mar. 8, 1974]

§ 60.152 Standard for particulate matter.

(a) On and after the date on which the performance test required to be conducted by §60.8 is completed, no owner or operator of any sewage sludge incinerator subject to the provisions of this subpart shall discharge or cause the discharge into the atmosphere of:

(1) Particulate matter at a rate in excess of 0.65 g/kg dry sludge input (1.30 lb/ton dry sludge input).

(2) Any gases which exhibit 20 percent opacity or greater.

[39 FR 9319, Mar. 8, 1974, as amended at 40 FR 46259, Oct. 6, 1975]

§ 60.153 Monitoring of operations.

(a) The owner or operator of any sludge incinerator subject to the provisions of this subpart shall:

(1) Install, calibrate, maintain, and operate a flow measuring device which can be used to determine either the mass or volume of sludge charged to the incinerator. The flow measuring device shall be certified by the manufacturer to have an accuracy of ±5 percent over its operating range. Except as provided in paragraph (d) of this section, the flow measuring device shall be operated continuously and data recorded during all periods of operation of the incinerator.

(2) Provide access to the sludge charged so that a well-mixed representative grab sample of the sludge can be obtained.

(3) Install, calibrate, maintain, and operate a weighing device for determining the mass of any municipal solid waste charged to the incinerator when sewage sludge and municipal solid waste are incinerated together. The weighing device shall have an accuracy of ±5 percent over its operating range.

(b) The owner or operator of any multiple hearth, fluidized bed, or electric sludge incinerator subject to the provisions of this subpart shall comply with the requirements of paragraph (a) of this section and:

(1) For incinerators equipped with a wet scrubbing device, install, calibrate, maintain and operate a monitoring device that continuously measures and records the pressure drop of the gas flow through the wet scrubbing device. Where a combination of wet scrubbers is used in series, the pressure drop of the gas flow through the combined system shall be continuously monitored. The device used to monitor scrubber pressure drop shall be certified by the manufacturer to be accurate within ±250 pascals (±1 inch water gauge) and shall be calibrated on an annual basis in accordance with the manufacturer's instructions.

(2) Install, calibrate, maintain and operate a monitoring device that continuously measures and records the oxygen content of the incinerator exhaust gas. The oxygen monitor shall be located upstream of any rabble shaft cooling air inlet into the incinerator exhaust gas stream, fan, ambient air recirculation damper, or any other source of dilution air. The oxygen monitoring device shall be certified by the manufacturer to have a relative accurancy of ±5 percent over its operating range and shall be calibrated according to method(s) prescribed by the manufacturer at least once each 24-hour operating period.

(3) Install, calibrate, maintain and operate temperature measuring devices at every hearth in multiple hearth furnaces; in the bed and outlet of fluidized bed incinerators; and in the drying, combustion, and cooling zones of electric incinerators. For multiple hearth furnaces, a minimum of one thermocouple shall be installed in each hearth in the cooling and drying zones, and a minimum of two thermocouples shall be installed in each hearth in the combustion zone. For electric incinerators, a minimum of one thermocouple shall be installed in the drying zone and one in the cooling zone, and a minimum of two thermocouples shall be installed in the combustion zone. Each temperature measuring device shall be certified by the manufacturer to have an accuracy of ±5 percent over its operating range. Except as provided in paragraph (d) of this section, the temperature monitoring devices shall be operated continuously and data recorded during all periods of operation of the incinerator.

(4) Install, calibrate, maintain and operate a device for measuring the fuel flow to the incinerator. The flow measuring device shall be certified by the manufacturer to have an accuracy of ±5 percent over its operating range. Except as provided in paragraph (d) of the section, the fuel flow measuring device shall be operated continuously and data recorded during all periods of operation of the incinerator.

(5) Except as provided in paragraph (d) of this section, collect and analyze a grab sample of the sludge fed to the incinerator once per day. The dry sludge content and the volatile solids content of the sample shall be determined in accordance with the method specified under § 60.154(c)(2), except that the determination of volatile solids, step (3)(b) of the method, may not be deleted.

(c) The owner or operator of any multiple hearth, fluidized bed, or electric sludge incinerator subject to the provisions of this subpart shall retain the following information and make it available for inspection by the Administrator for a minimum of 2 years:

(1) For incinerators equipped with a wet scrubbing device, a record of the measured pressure drop of the gas flow through the wet scrubbing device, as required by paragraph (b)(1) of this section.

(2) A record of the measured oxygen content of the incinerator exhaust gas, as required by paragraph (b)(2) of this section.

(3) A record of the rate of sludge charged to the incinerator, the measured temperatures of the incinerator, the fuel flow to the incinerator, and the total solids and volatile solids content of the sludge charged to the incinerator, as required by paragraphs (a)(1), (b)(3), (b)(4), and (b)(5) of this section.

(d) The owner or operator of any multiple hearth, fluidized bed, or electric sludge incinerator subject to the provisions of this subpart from which the particulate matter emission rate measured during the performance test required under §60.154(d) is less than or equal to 0.38 g/kg of dry sludge input (0.75 lb/ton) shall be required to comply with the requirements in paragraphs (a), (b), and (c) of this section during all periods of this incinerator following the performance test except that:

(1) Continuous operation of the monitoring devices and data recorders in paragraphs (a)(1), (b)(3), and (b)(4) of this section shall not be required.

(2) Daily sampling and analysis of sludge feed in paragraph (b)(5) of this section shall not be required.

(3) Recordkeeping specified in paragraph (c)(3) of this section shall not be required.

(e) The owner or operator of any sludge incinerator other than a multiple hearth, fluidized bed, or electric incinerator or any sludge incinerator equipped with a control device other than a wet scrubber shall submit to the Administrator for approval a plan for monitoring and recording incinerator and control device operation parameters. The plan shall be submitted to the Administrator:

(1) No later than 90 days after October 6, 1988, for sources which have provided notification of commencement of construction prior to October 6, 1988.

(2) No later than 90 days after the notification of commencement of construction, for sources which provide notification of commencement of construction on or after October 6, 1988.

(3) At least 90 days prior to the date on which the new control device becomes operative, for sources switching to a control device other than a wet scrubber.

[36 FR 24877, Dec. 23, 1971, as amended at 53 FR 39416, Oct. 6, 1988]

§60.154 Test methods and procedures.

(a) In conducting the performance tests required in §60.8, the owner or operator shall use as reference methods and procedures the test methods in Appendix A of this part or other methods and procedures as specified in this section, except as provided for in §60.8(b).

(b) The owner or operator shall determine compliance with the particulate matter emission standards in §60.152 as follows:

(1) The emission rate (E) of particulate matter for each run shall be computed using the following equation:

$$E = K(c_s Q_{sd})/S$$

where:

E=emission rate of particulate matter, g/kg (lb/ton) of dry sludge input.

c_s=concentration of particulate matter, g/dscm (g/dscf).

Q_{sd}=volumetric flow rate of effluent gas, dscm/hr (dscf/hr).

S=charging rate of dry sludge during the run, kg/hr (lb/hr).

K=conversion factor, 1.0 g/g [4.409 $lb^2/(g\text{-}ton)$].

(2) Method 5 shall be used to determine the particulate matter concentration (c_s) and the volumetric flow rate (Q_{sd}) of the effluent gas. The sampling time and sample volume for each run shall be at least 60 minutes and 0.90 dscm (31.8 dscf).

(3) The dry sludge charging rate (S) for each run shall be computed using either of the following equations:

$$S = K_m S_m R_{dm}/\theta$$

$$S = K_v S_v R_{dv}/\theta$$

where:

S=charging rate of dry sludge, kg/hr (lb/hr).

S_m=total mass of sludge charged, kg (lb).

R_{dm}=average mass of dry sludge per unit mass of sludge charged, mg/mg (lb/lb).

θ=duration of run, min.
K_m=conversion factor, 60 min/hr.
S_v=total volume of sludge charged, m^3 (gal).
R_{dv}=average mass of dry sludge per unit volume of sludge charged, mg/liter (lb/ft^3).
K_v=conversion factor, 60×10^{-3} (liter-kg-min)/(m^3-mg-hr) [8.021 (ft^3-min)/(gal-hr)].

(4) the flow measuring device of § 60.153(a)(1) shall be used to determine the total mass (S_m) or volume (S_v) of sludge charged to the incinerator during each run. If the flow measuring device is on a time rate basis, readings shall be taken and recorded at 5-minute intervals during the run and the total charge of sludge shall be computed using the following equations, as applicable:

$$S_m = \sum_{i=1}^{n} Q/_{mi}\,\theta_i$$

$$S_v = \sum_{i=1}^{n} Q/_{vi}\,\theta_i$$

where:
Q_{mi}=average mass flow rate calculated by averaging the flow rates at the beginning and end of each interval ''i'', kg/min (lb/min).
Q_{vi}=average volume flow rate calculated by averaging the flow rates at the beginning and end of each interval ''i'', m^3/min (gal/min).
θ_i=duration of interval ''i'', min.

(5) Samples of the sludge charged to the incinerator shall be collected in nonporous jars at the beginning of each run and at approximately 1-hour intervals thereafter until the test ends, and ''209 F. Method for Solid and Semisolid Samples'' (incorporated by reference—see § 60.17) shall be used to determine dry sludge content of each sample (total solids residue), except that:

(i) Evaporating dishes shall be ignited to at least 103 °C rather than the 550 °C specified in step 3(a)(1).

(ii) Determination of volatile residue, step 3(b) may be deleted.

(iii) The quantity of dry sludge per unit sludge charged shall be determined in terms of mg/liter (lb/ft^3) or mg/mg (lb/lb).

(iv) The average dry sludge content shall be the arithmetic average of all the samples taken during the run.

(6) Method 9 and the procedures in § 60.11 shall be used to determine opacity.

(c) [Reserved]

(d) The owner or operator of any sludge incinerator subject to the provisions of this subpart shall conduct a performance test during which the monitoring and recording devices required under § 60.153(a)(1), (b)(1), (b)(2), (b)(3), and (b)(4) are installed and operating and for which the sampling and analysis procedures required under § 60.153(b)(5) are performed. The owner or operator shall provide the Administrator at least 30 days prior notice of the performance test to afford the Administrator the opportunity to have an observer present.

(1) For incinerators that commenced construction or modification on or before April 18, 1986, the performance test shall be conducted within 360 days of the effective date of these regulations unless the monitoring and recording devices required under § 60.153(a)(1), (b)(1), (b)(2), (b)(3), and (b)(4) were installed and operating and the sampling and analysis procedures required under § 60.153(b)(5) were performed during the most recent performance test and a record of the measurements taken during the performance test is available.

(2) For incinerators that commence construction or modification after April 18, 1986, the date of the performance test shall be determined by the requirements in § 60.8.

[54 FR 6668, Feb. 14, 1989, as amended at 54 FR 27015, June 27, 1989; 59 FR 5108, Feb. 3, 1994]

§ 60.155 Reporting.

(a) The owner or operator of any multiple hearth, fluidized bed, or electric sludge incinerator subject to the provisions of this subpart shall submit to the Administrator semi-annually a report in writing which contains the following:

(1) A record of average scrubber pressure drop measurements for each period of 15 minutes duration or more during which the pressure drop of the scrubber was less than, by a percentage specified below, the average scrubber pressure drop measured during the most recent performance test. The percent reduction in scrubber pressure

drop for which a report is required shall be determined as follows:

(i) For incinerators that achieved an average particulate matter emission rate of 0.38 kg/Mg (0.75 lb/ton) dry sludge input or less during the most recent performance test, a scrubber pressure drop reduction of more than 30 percent from the average scrubber pressure drop recorded during the most recent performance test shall be reported.

(ii) For incinerators that achieved an average particulate matter emission rate of greater than 0.38 kg/Mg (0.75 lb/ton) dry sludge input during the most recent performance test, a percent reduction in pressure drop greater than that calculated according to the following equation shall be reported:

$P = -111E + 72.15$

where P=Percent reduction in pressure drop, and

E=Average particulate matter emissions (kg/megagram)

(2) A record of average oxygen content in the incinerator exhaust gas for each period of 1-hour duration or more that the oxygen content of the incinerator exhaust gas exceeds the average oxygen content measured during the most recent performance test by more than 3 percent.

(b) The owner or operator of any multiple hearth, fluidized bed, or electric sludge incinerator from which the average particulate matter emission rate measured during the performance test required under §60.154(d) exceeds 0.38 g/kg of dry sludge input (0.75 lb/ton of dry sludge input) shall include in the report for each calendar day that a decrease in scrubber pressure drop or increase in oxygen content of exhaust gas is reported a record of the following:

(1) Scrubber pressure drop averaged over each 1-hour incinerator operating period.

(2) Oxygen content in the incinerator exhaust averaged over each 1-hour incinerator operating period.

(3) Temperatures of every hearth in multiple hearth incinerators; of the bed and outlet of fluidized bed incinerators; and of the drying, combustion, and cooling zones of electric incinerators averaged over each 1-hour incinerator operating period.

(4) Rate of sludge charged to the incinerator averaged over each 1-hour incinerator operating period.

(5) Incinerator fuel use averaged over each 8-hour incinerator operating period.

(6) Moisture and volatile solids content of the daily grab sample of sludge charged to the incinerator.

(c) The owner or operator of any sludge incinerator other than a multiple hearth, fluidized bed, or electric incinerator or any sludge incinerator equipped with a control device other than a wet scrubber shall include in the semi-annual report a record of control device operation measurements, as specified in the plan approved under §60.153(e).

[53 FR 39417, Oct. 6, 1988]

§60.156 Delegation of authority.

(a) In delegating implementation and enforcement authority to a State under section 111(c) of the Act, the authorities contained in paragraph (b) of this section shall be retained by the Administrator and not transferred to a State.

(b) Authorities which will not be delegated to States: §60.153(e).

[53 FR 39418, Oct. 6, 1988]

Subpart P—Standards of Performance for Primary Copper Smelters

SOURCE: 41 FR 2338, Jan. 15, 1976, unless otherwise noted.

§60.160 Applicability and designation of affected facility.

(a) The provisions of this subpart are applicable to the following affected facilities in primary copper smelters: Dryer, roaster, smelting furnace, and copper converter.

(b) Any facility under paragraph (a) of this section that commences construction or modification after October 16, 1974, is subject to the requirements of this subpart.

[42 FR 37937, July 25, 1977]

§60.161 Definitions.

As used in this subpart, all terms not defined herein shall have the meaning

given them in the Act and in subpart A of this part.

(a) *Primary copper smelter* means any installation or any intermediate process engaged in the production of copper from copper sulfide ore concentrates through the use of pyrometallurgical techniques.

(b) *Dryer* means any facility in which a copper sulfide ore concentrate charge is heated in the presence of air to eliminate a portion of the moisture from the charge, provided less than 5 percent of the sulfur contained in the charge is eliminated in the facility.

(c) *Roaster* means any facility in which a copper sulfide ore concentrate charge is heated in the presence of air to eliminate a significant portion (5 percent or more) of the sulfur contained in the charge.

(d) *Calcine* means the solid materials produced by a roaster.

(e) *Smelting* means processing techniques for the melting of a copper sulfide ore concentrate or calcine charge leading to the formation of separate layers of molten slag, molten copper, and/or copper matte.

(f) *Smelting furnace* means any vessel in which the smelting of copper sulfide ore concentrates or calcines is performed and in which the heat necessary for smelting is provided by an electric current, rapid oxidation of a portion of the sulfur contained in the concentrate as it passes through an oxidizing atmosphere, or the combustion of a fossil fuel.

(g) *Copper converter* means any vessel to which copper matte is charged and oxidized to copper.

(h) *Sulfuric acid plant* means any facility producing sulfuric acid by the contact process.

(i) *Fossil fuel* means natural gas, petroleum, coal, and any form of solid, liquid, or gaseous fuel derived from such materials for the purpose of creating useful heat.

(j) *Reverberatory smelting furnace* means any vessel in which the smelting of copper sulfide ore concentrates or calcines is performed and in which the heat necessary for smelting is provided primarily by combustion of a fossil fuel.

(k) *Total smelter charge* means the weight (dry basis) of all copper sulfide ore concentrates processed at a primary copper smelter, plus the weight of all other solid materials introduced into the roasters and smelting furnaces at a primary copper smelter, except calcine, over a one-month period.

(l) *High level of volatile impurities* means a total smelter charge containing more than 0.2 weight percent arsenic, 0.1 weight percent antimony, 4.5 weight percent lead or 5.5 weight percent zinc, on a dry basis.

§ 60.162 Standard for particulate matter.

(a) On and after the date on which the performance test required to be conducted by § 60.8 is completed, no owner or operator subject to the provisions of this subpart shall cause to be discharged into the atmosphere from any dryer any gases which contain particulate matter in excess of 50 mg/dscm (0.022 gr/dscf).

§ 60.163 Standard for sulfur dioxide.

(a) On and after the date on which the performance test required to be conducted by § 60.8 is completed, no owner or operator subject to the provisions of this subpart shall cause to be discharged into the atmosphere from any roaster, smelting furnace, or copper converter any gases which contain sulfur dioxide in excess of 0.065 percent by volume, except as provided in paragraphs (b) and (c) of this section.

(b) Reverberatory smelting furnaces shall be exempted from paragraph (a) of this section during periods when the total smelter charge at the primary copper smelter contains a high level of volatile impurities.

(c) A change in the fuel combusted in a reverberatory smelting furnace shall not be considered a modification under this part.

§ 60.164 Standard for visible emissions.

(a) On and after the date on which the performance test required to be conducted by § 60.8 is completed, no owner or operator subject to the provisions of this subpart shall cause to be discharged into the atmosphere from any dryer any visible emissions which exhibit greater than 20 percent opacity.

(b) On and after the date on which the performance test required to be

conducted by §60.8 is completed, no owner or operator subject to the provisions of this subpart shall cause to be discharged into the atmosphere from any affected facility that uses a sulfuric acid plant to comply with the standard set forth in §60.163, any visible emissions which exhibit greater than 20 percent opacity.

§ 60.165 Monitoring of operations.

(a) The owner or operator of any primary copper smelter subject to §60.163 (b) shall keep a monthly record of the total smelter charge and the weight percent (dry basis) of arsenic, antimony, lead and zinc contained in this charge. The analytical methods and procedures employed to determine the weight of the total smelter charge and the weight percent of arsenic, antimony, lead and zinc shall be approved by the Administrator and shall be accurate to within plus or minus ten percent.

(b) The owner or operator of any primary copper smelter subject to the provisions of this subpart shall install and operate:

(1) A continuous monitoring system to monitor and record the opacity of gases discharged into the atmosphere from any dryer. The span of this system shall be set at 80 to 100 percent opacity.

(2) A continuous monitoring system to monitor and record sulfur dioxide emissions discharged into the atmosphere from any roaster, smelting furnace or copper converter subject to §60.163 (a). The span of this system shall be set at a sulfur dioxide concentration of 0.20 percent by volume.

(i) The continuous monitoring system performance evaluation required under §60.13(c) shall be completed prior to the initial performance test required under §60.8.

(ii) For the purpose of the continuous monitoring system performance evaluation required under §60.13(c) the reference method referred to under the Relative Accuracy Test Procedure in Performance Specification 2 of appendix B to this part shall be Method 6. For the performance evaluation, each concentration measurement shall be of one hour duration. The pollutant gas used to prepare the calibration gas mixtures required under Performance Specification 2 of appendix B, and for calibration checks under §60.13 (d), shall be sulfur dioxide.

(c) Six-hour average sulfur dioxide concentrations shall be calculated and recorded daily for the four consecutive 6-hour periods of each operating day. Each six-hour average shall be determined as the arithmetic mean of the appropriate six contiguous one-hour average sulfur dioxide concentrations provided by the continuous monitoring system installed under paragraph (b) of this section.

(d) For the purpose of reports required under §60.7(c), periods of excess emissions that shall be reported are defined as follows:

(1) *Opacity.* Any six-minute period during which the average opacity, as measured by the continuous monitoring system installed under paragraph (b) of this section, exceeds the standard under §60.164(a).

(2) *Sulfur dioxide.* All six-hour periods during which the average emissions of sulfur dioxide, as measured by the continuous monitoring system installed under §60.163, exceed the level of the standard. The Administrator will not consider emissions in excess of the level of the standard for less than or equal to 1.5 percent of the six-hour periods during the quarter as indicative of a potential violation of §60.11(d) provided the affected facility, including air pollution control equipment, is maintained and operated in a manner consistent with good air pollution control practice for minimizing emissions during these periods. Emissions in excess of the level of the standard during periods of startup, shutdown, and malfunction are not to be included within the 1.5 percent.

[41 FR 2338, Jan. 15, 1976; 41 FR 8346, Feb. 26, 1976, as amended at 42 FR 57126, Nov. 1, 1977; 48 FR 23611, May 25, 1983; 54 FR 6668, Feb. 14, 1989]

§ 60.166 Test methods and procedures.

(a) In conducting performance tests required in §60.8, the owner or operator shall use as reference methods and procedures the test methods in appendix A of this part or other methods and procedures as specified in this section, except as provided in §60.8(b).

(b) The owner or operator shall determine compliance with the particulate matter, sulfur dioxide (SO_2) and visible emission standards in §§ 60.162, 60.163, and 60.164 as follows:

(1) Method 5 shall be used to determine the particulate matter concentration. The sampling time and sample volume for each run shall be at least 60 minutes and 0.85 dscm (30 dscf).

(2) The continuous monitoring system of § 60.165(b)(2) shall be used to determine the SO_2 concentrations on a dry basis. The sampling time for each run shall be 6 hours, and the average SO_2 concentration shall be computed for the 6-hour period as in § 60.165(c). The monitoring system drift during the run may not exceed 2 percent of the span value.

(3) Method 9 and the procedures in § 60.11 shall be used to determine opacity.

[54 FR 6668, Feb. 14, 1989]

Subpart Q—Standards of Performance for Primary Zinc Smelters

SOURCE: 41 FR 2340, Jan. 15, 1976, unless otherwise noted.

§ 60.170 Applicability and designation of affected facility.

(a) The provisions of this subpart are applicable to the following affected facilities in primary zinc smelters: roaster and sintering machine.

(b) Any facility under paragraph (a) of this section that commences construction or modification after October 16, 1974, is subject to the requirements of this subpart.

[42 FR 37937, July 25, 1977]

§ 60.171 Definitions.

As used in this subpart, all terms not defined herein shall have the meaning given them in the Act and in subpart A of this part.

(a) *Primary zinc smelter* means any installation engaged in the production, or any intermediate process in the production, of zinc or zinc oxide from zinc sulfide ore concentrates through the use of pyrometallurgical techniques.

(b) *Roaster* means any facility in which a zinc sulfide ore concentrate charge is heated in the presence of air to eliminate a significant portion (more than 10 percent) of the sulfur contained in the charge.

(c) *Sintering machine* means any furnace in which calcines are heated in the presence of air to agglomerate the calcines into a hard porous mass called *sinter*.

(d) *Sulfuric acid plant* means any facility producing sulfuric acid by the contact process.

§ 60.172 Standard for particulate matter.

(a) On and after the date on which the performance test required to be conducted by § 60.8 is completed, no owner or operator subject to the provisions of this subpart shall cause to be discharged into the atmosphere from any sintering machine any gases which contain particulate matter in excess of 50 mg/dscm (0.022 gr/dscf).

§ 60.173 Standard for sulfur dioxide.

(a) On and after the date on which the performance test required to be conducted by § 60.8 is completed, no owner or operator subject to the provisions of this subpart shall cause to be discharged into the atmosphere from any roaster any gases which contain sulfur dioxide in excess of 0.065 percent by volume.

(b) Any sintering machine which eliminates more than 10 percent of the sulfur initially contained in the zinc sulfide ore concentrates will be considered as a roaster under paragraph (a) of this section.

§ 60.174 Standard for visible emissions.

(a) On and after the date on which the performance test required to be conducted by § 60.8 is completed, no owner or operator subject to the provisions of this subpart shall cause to be discharged into the atmosphere from any sintering machine any visible emissions which exhibit greater than 20 percent opacity.

(b) On and after the date on which the performance test required to be conducted by § 60.8 is completed, no owner or operator subject to the provisions of this subpart shall cause to be discharged into the atmosphere from any affected facility that uses a sulfuric acid plant to comply with the

standard set forth in § 60.173, any visible emissions which exhibit greater than 20 percent opacity.

§ 60.175 Monitoring of operations.

(a) The owner or operator of any primary zinc smelter subject to the provisions of this subpart shall install and operate:

(1) A continuous monitoring system to monitor and record the opacity of gases discharged into the atmosphere from any sintering machine. The span of this system shall be set at 80 to 100 percent opacity.

(2) A continuous monitoring system to monitor and record sulfur dioxide emissions discharged into the atmosphere from any roaster subject to § 60.173. The span of this system shall be set at a sulfur dioxide concentration of 0.20 percent by volume.

(i) The continuous monitoring system performance evaluation required under § 60.13(c) shall be completed prior to the initial performance test required under § 60.8.

(ii) For the purpose of the continuous monitoring system performance evaluation required under § 60.13(c), the reference method referred to under the Relative Accuracy Test Procedure in Performance Specification 2 of appendix B to this part shall be Method 6. For the performance evaluation, each concentration measurement shall be of 1 hour duration. The pollutant gas used to prepare the calibration gas mixtures required under Performance Specification 2 of appendix B, and for calibration checks under § 60.13(d), shall be sulfur dioxide.

(b) Two-hour average sulfur dioxide concentrations shall be calculated and recorded daily for the 12 consecutive 2-hour periods of each operating day. Each 2-hour average shall be determined as the arithmetic mean of the appropriate two contiguous 1-hour average sulfur dioxide concentrations provided by the continuous monitoring system installed under paragraph (a) of this section.

(c) For the purpose of reports required under § 60.7(c), periods of excess emissions that shall be reported are defined as follows:

(1) Opacity. Any 6-minute period during which the average opacity, as measured by the continuous monitoring system installed under paragraph (a) of this section, exceeds the standard under § 60.174(a).

(2) Sulfur dioxide. Any 2-hour period, as described in paragraph (b) of this section, during which the average emissions of sulfur dioxide, as measured by the continuous monitoring system installed under paragraph (a) of this section, exceeds the standard under § 60.173.

[41 FR 2340, Jan. 15, 1976, as amended at 48 FR 23611, May 25, 1983; 54 FR 6668, Feb. 14, 1989]

§ 60.176 Test methods and procedures.

(a) In conducting the performance tests required in § 60.8, the owner or operator shall use as reference methods and procedures the test methods in appendix A of this part or other methods and procedures as specified in this section, except as provided in § 60.8(b).

(b) The owner or operator shall determine compliance with the particulate matter, sulfur dioxide (SO_2), and visible emission standards in §§ 60.172, 60.173, and 60.174 as follows:

(1) Method 5 shall be used to determine the particulate matter concentration. The sampling time and sample volume for each run shall be at least 60 minutes and 0.85 dscm (30 dscf).

(2) The continuous monitoring system of § 60.175(a)(2) shall be used to determine the SO_2 concentrations on a dry basis. The sampling time for each run shall be 2 hours, and the average SO_2 concentration for the 2-hour period shall be computed as in § 60.175(b). The monitoring system drift during the run may not exceed 2 percent of the span value.

(3) Method 9 and the procedures in § 60.11 shall be used to determine opacity.

[54 FR 6669, Feb. 14, 1989]

Subpart R—Standards of Performance for Primary Lead Smelters

SOURCE: 41 FR 2340, Jan. 15, 1976, unless otherwise noted.

§ 60.180 Applicability and designation of affected facility.

(a) The provisions of this subpart are applicable to the following affected facilities in primary lead smelters: sintering machine, sintering machine discharge end, blast furnace, dross reverberatory furnace, electric smelting furnace, and converter.

(b) Any facility under paragraph (a) of this section that commences construction or modification after October 16, 1974, is subject to the requirements of this subpart.

[42 FR 37937, July 25, 1977]

§ 60.181 Definitions.

As used in this subpart, all terms not defined herein shall have the meaning given them in the Act and in subpart A of this part.

(a) *Primary lead smelter* means any installation or any intermediate process engaged in the production of lead from lead sulfide ore concentrates through the use of pyrometallurgical techniques.

(b) *Sintering machine* means any furnace in which a lead sulfide ore concentrate charge is heated in the presence of air to eliminate sulfur contained in the charge and to agglomerate the charge into a hard porous mass called *sinter*.

(c) *Sinter bed* means the lead sulfide ore concentrate charge within a sintering machine.

(d) *Sintering machine discharge end* means any apparatus which receives sinter as it is discharged from the conveying grate of a sintering machine.

(e) *Blast furnace* means any reduction furnace to which sinter is charged and which forms separate layers of molten slag and lead bullion.

(f) *Dross reverberatory furnace* means any furnace used for the removal or refining of impurities from lead bullion.

(g) *Electric smelting furnace* means any furnace in which the heat necessary for smelting of the lead sulfide ore concentrate charge is generated by passing an electric current through a portion of the molten mass in the furnace.

(h) *Converter* means any vessel to which lead concentrate or bullion is charged and refined.

(i) *Sulfuric acid plant* means any facility producing sulfuric acid by the contact process.

§ 60.182 Standard for particulate matter.

(a) On and after the date on which the performance test required to be conducted by § 60.8 is completed, no owner or operator subject to the provisions of this subpart shall cause to be discharged into the atmosphere from any blast furnace, dross reverberatory furnace, or sintering machine discharge end any gases which contain particulate matter in excess of 50 mg/dscm (0.022 gr/dscf).

(b) [Reserved]

§ 60.183 Standard for sulfur dioxide.

(a) On and after the date on which the performance test required to be conducted by § 60.8 is completed, no owner or operator subject to the provisions of this subpart shall cause to be discharged into the atmosphere from any sintering machine, electric smelting furnace, or converter gases which contain sulfur dioxide in excess of 0.065 percent by volume.

(b) [Reserved]

§ 60.184 Standard for visible emissions.

(a) On and after the date on which the performance test required to be conducted by § 60.8 is completed, no owner or operator subject to the provisions of this subpart shall cause to be discharged into the atmosphere from any blast furnace, dross reverberatory furnace, or sintering machine discharge end any visible emissions which exhibit greater than 20 percent opacity.

(b) On and after the date on which the performance test required to be conducted by § 60.8 is completed, no owner or operator subject to the provisions of this subpart shall cause to be discharged into the atmosphere from any affected facility that uses a sulfuric acid plant to comply with the standard set forth in § 60.183, any visible emissions which exhibit greater than 20 percent opacity.

§ 60.185 Monitoring of operations.

(a) The owner or operator of any primary lead smelter subject to the provisions of this subpart shall install and operate:

(1) A continuous monitoring system to monitor and record the opacity of gases discharged into the atmosphere from any blast furnace, dross reverberatory furnace, or sintering machine discharge end. The span of this system shall be set at 80 to 100 percent opacity.

(2) A continuous monitoring system to monitor and record sulfur dioxide emissions discharged into the atmosphere from any sintering machine, electric furnace or converter subject to § 60.183. The span of this system shall be set at a sulfur dioxide concentration of 0.20 percent by volume.

(i) The continuous monitoring system performance evaluation required under § 60.13(c) shall be completed prior to the initial performance test required under § 60.8.

(ii) For the purpose of the continuous monitoring system performance evaluation required under § 60.13(c), the reference method referred to under the Relative Accuracy Test Procedure in Performance Specification 2 of appendix B to this part shall be Method 6. For the performance evaluation, each concentration measurement shall be of one hour duration. The pollutant gases used to prepare the calibration gas mixtures required under Performance Specification 2 of appendix B, and for calibration checks under § 60.13(d), shall be sulfur dioxide.

(b) Two-hour average sulfur dioxide concentrations shall be calculated and recorded daily for the twelve consecutive two-hour periods of each operating day. Each two-hour average shall be determined as the arithmetic mean of the appropriate two contiguous one-hour average sulfur dioxide concentrations provided by the continuous monitoring system installed under paragraph (a) of this section.

(c) For the purpose of reports required under § 60.7(c), periods of excess emissions that shall be reported are defined as follows:

(1) Opacity. Any six-minute period during which the average opacity, as measured by the continuous monitoring system installed under paragraph (a) of this section, exceeds the standard under § 60.184(a).

(2) Sulfur dioxide. Any two-hour period, as described in paragraph (b) of this section, during which the average emissions of sulfur dioxide, as measured by the continuous monitoring system installed under paragraph (a) of this section, exceeds the standard under § 60.183.

[41 FR 2340, Jan. 15, 1976, as amended at 48 FR 23611, May 25, 1983; 54 FR 6668, Feb. 14, 1989]

§ 60.186 Test methods and procedures.

(a) In conducting the performance tests required in § 60.8, the owner or operator shall use as reference methods and procedures the test methods in appendix A of this part or other methods and procedures as specified in this section, except as provided in § 60.8(b).

(b) The owner or operator shall determine compliance with the particulate matter, sulfur dioxide (SO_2), and visible emission standards in §§ 60.182, 60.183, and 60.184 as follows:

(1) Method 5 shall be used to determine the particulate matter concentration. The sampling time and sample volume for each run shall be at least 60 minutes and 0.85 dscm (30 dscf).

(2) The continuous monitoring system of § 60.185(a)(2) shall be used to determine the SO_2 concentrations on a dry basis. The sampling time for each run shall be 2 hours, and the average SO_2 concentration for the 2-hour period shall be computed as in § 60.185(b). The monitoring system drift during the run may not exceed 2 percent of the span value.

(3) Method 9 and the procedures in § 60.11 shall be used to determine opacity.

[54 FR 6669, Feb. 14, 1989]

Subpart S—Standards of Performance for Primary Aluminum Reduction Plants

SOURCE: 45 FR 44207, June 30, 1980, unless otherwise noted.

§ 60.190 Applicability and designation of affected facility.

(a) The affected facilities in primary aluminum reduction plants to which

this subpart applies are potroom groups and anode bake plants.

(b) Except as provided in paragraph (c) of this section, any affected facility under paragraph (a) of this section that commences construction or modification after October 23, 1974, is subject to the requirements of this subpart.

(c) An owner or operator of an affected facility under paragraph (a) of this section may elect to comply with the requirements of this subpart or the requirements of subpart LL of part 63 of this chapter.

[42 FR 37937, July 25, 1977, as amended at 45 FR 44206, June 30, 1980; 62 FR 52399, Oct. 7, 1997]

§ 60.191 Definitions.

As used in this subpart, all terms not defined herein shall have the meaning given them in the Act and in subpart A of this part.

Aluminum equivalent means an amount of aluminum which can be produced from a Mg of anodes produced by an anode bake plant as determined by § 60.195(g).

Anode bake plant means a facility which produces carbon anodes for use in a primary aluminum reduction plant.

Potroom means a building unit which houses a group of electrolytic cells in which aluminum is produced.

Potroom group means an uncontrolled potroom, a potroom which is controlled individually, or a group of potrooms or potroom segments ducted to a common control system.

Primary aluminum reduction plant means any facility manufacturing aluminum by electrolytic reduction.

Primary control system means an air pollution control system designed to remove gaseous and particulate flourides from exhaust gases which are captured at the cell.

Roof monitor means that portion of the roof of a potroom where gases not captured at the cell exit from the potroom.

Total fluorides means elemental fluorine and all fluoride compounds as measured by reference methods specified in § 60.195 or by equivalent or alternative methods (see § 60.8(b)).

§ 60.192 Standard for fluorides.

(a) On and after the date on which the initial performance test required to be conducted by § 60.8 is completed, no owner or operator subject to the provisions of this subpart shall cause to be discharged into the atmosphere from any affected facility any gases containing total fluorides, as measured according to § 60.8 above, in excess of:

(1) 1.0 kg/Mg (2.0 lb/ton) of aluminum produced for potroom groups at Soderberg plants: except that emissions between 1.0 kg/Mg and 1.3 kg/Mg (2.6 lb/ton) will be considered in compliance if the owner or operator demonstrates that exemplary operation and maintenance procedures were used with respect to the emission control system and that proper control equipment was operating at the affected facility during the performance tests;

(2) 0.95 kg/Mg (1.9 lb/ton) of aluminum produced for potroom groups at prebake plants; except that emissions between 0.95 kg/Mg and 1.25 kg/Mg (2.5 lb/ton) will be considered in compliance if the owner or operator demonstrates that exemplary operation and maintenance procedures were used with respect to the emission control system and that proper control equipment was operating at the affected facility during the performance test; and

(3) 0.05 kg/Mg (0.1 lb/ton) of aluminum equivalent for anode bake plants.

(b) Within 30 days of any performance test which reveals emissions which fall between the 1.0 kg/Mg and 1.3 kg/Mg levels in paragraph (a)(1) of this section or between the 0.95 kg/Mg and 1.25 kg/Mg levels in paragraph (a)(2) of this section, the owner or operator shall submit a report indicating whether all necessary control devices were on-line and operating properly during the performance test, describing the operating and maintenance procedures followed, and setting forth any explanation for the excess emissions, to the Director of the Enforcement Division of the appropriate EPA Regional Office.

§ 60.193 Standard for visible emissions.

(a) On and after the date on which the performance test required to be conducted by § 60.8 is completed, no

owner or operator subject to the provisions of this subpart shall cause to be discharged into the atmosphere:

(1) From any potroom group any gases which exhibit 10 percent opacity or greater, or

(2) From any anode bake plant any gases which exhibit 20 percent opacity or greater.

§ 60.194 Monitoring of operations.

(a) The owner or operator of any affected facility subject to the provisions of this subpart shall install, calibrate, maintain, and operate monitoring devices which can be used to determine daily the weight of aluminum and anode produced. The weighing devices shall have an accuracy of ± 5 percent over their operating range.

(b) The owner or operator of any affected facility shall maintain a record of daily production rates of aluminum and anodes, raw material feed rates, and cell or potline voltages.

(c) Following the initial performance test as required under §60.8(a), an owner or operator shall conduct a performance test at least once each month during the life of the affected facility, except when malfunctions prevent representative sampling, as provided under §60.8(c). The owner or operator shall give the Administrator at least 15 days advance notice of each test. The Administrator may require additional testing under section 114 of the Clean Air Act.

(d) An owner or operator may petition the Administrator to establish an alternative testing requirement that requires testing less frequently than once each month for a primary control system or an anode bake plant. If the owner or operator show that emissions from the primary control system or the anode bake plant have low variability during day-to-day operations, the Administrator may establish such an alternative testing requirement. The alternative testing requirement shall include a testing schedule and, in the case of a primary control system, the method to be used to determine primary control system emissions for the purpose of performance tests. The Administrator shall publish the alternative testing requirement in the FEDERAL REGISTER.

(1) Alternative testing requirements are established for Anaconda Aluminum Company's Sebree plant in Henderson, Kentucky: The anode bake plant and primary control system are to be tested once a year rather than once a month.

(2) Alternative testing requirements are established for Alumax of South Carolina's Mt. Holly Plant in Mt. Holly, South Carolina: The anode bake plant and primary control system are to be tested once a year rather than once a month.

[45 FR 44207, June 30, 1980, as amended at 54 FR 6669, Feb. 14, 1989]

§ 60.195 Test methods and procedures.

(a) In conducting the performance tests required in §60.8, the owner or operator shall use as reference methods and procedures the test methods in appendix A of this part or other methods and procedures as specified in this section, except as provided in §60.8(b).

(b) The owner or operator shall determine compliance with the total fluorides and visible emission standards in §§60.192 and 60.193 as follows:

(1) The emission rate (E_p) of total fluorides from potroom groups shall be computed for each run using the following equation:

$$E_p=[(C_s Q_{sd})_1+(C_s Q_{sd})_2]/(P K)$$

where:

E_p=emission rate of total fluorides from a potroom group, kg/Mg (lb/ton).

C_s=concentration of total fluorides, mg/dscm (mg/dscf).

Q_{sd}=volumetric flow rate of effluent gas, dscm/hr (dscf/hr).

P=aluminum production rate, Mg/hr (ton/hr).

K=conversion factor, 10^6 mg/kg (453,600 mg/lb).

1=subscript for primary control system effluent gas.

2=subscript for secondary control system or roof monitor effluent gas.

(2) The emission rate (E_b) of total fluorides from anode bake plants shall be computed for each run using the following equation:

$$E_b=(C_s Q_{sd})/(P_e K)$$

where:

E_b=emission rate of total fluorides, kg/Mg (lb/ton) of aluminum equivalent.

C_s=concentration of total fluorides, mg/dscm (mg/dscf).

Q_{sd}=volumetric flow rate of effluent gas, dscm/hr (dscf/hr).

P_e=aluminum equivalent for anode production rate, Mg/hr (ton/hr).
K=conversion factor, 10^6 mg/kg (453,600 mg/lb).

(3) Methods 13A or 13B shall be used for ducts or stacks, and Method 14 for roof monitors not employing stacks or pollutant collection systems, to determine the total fluorides concentration (C_s) and volumetric flow rate (Q_{sd}) of the effluent gas. The sampling time and sample volume for each run shall be at least 8 hours and 6.80 dscm (240 dscf) for potroom groups and at least 4 hours and 3.40 dscm (120 dscf) for anode bake plants.

(4) The monitoring devices of §60.194(a) shall be used to determine the daily weight of aluminum and anode produced.

(i) The aluminum production rate (P) shall be determined by dividing 720 hours into the weight of aluminum tapped from the affected facility during a period of 30 days before and including the final run of a performance test.

(ii) The aluminum equivalent production rate (P_e) for anodes shall be determined as 2 times the average weight of anode produced during a representative oven cycle divided by the cycle time. An owner or operator may establish a multiplication factor other than 2 by submitting production records of the amount of aluminum produced and the concurrent weight of anodes consumed by the potrooms.

(5) Method 9 and the procedures in §60.11 shall be used to determine opacity.

[54 FR 6669, Feb. 14, 1989]

Subpart T—Standards of Performance for the Phosphate Fertilizer Industry: Wet-Process Phosphoric Acid Plants

§60.200 Applicability and designation of affected facility.

(a) The affected facility to which the provisions of this subpart apply is each wet-process phosphoric acid plant having a design capacity of more than 15 tons of equivalent P_2O_5 feed per calendar day. For the purpose of this subpart, the affected facility includes any combination of: reactors, filters, evaporators, and hot wells.

(b) Any facility under paragraph (a) of this section that commences construction or modification after October 22, 1974, is subject to the requirements of this subpart.

[42 FR 37937, July 25, 1977, as amended at 48 FR 7129, Feb. 17, 1983]

§60.201 Definitions.

As used in this subpart, all terms not defined herein shall have the meaning given them in the Act and in subpart A of this part.

(a) *Wet-process phosphoric acid plant* means any facility manufacturing phosphoric acid by reacting phosphate rock and acid.

(b) *Total fluorides* means elemental fluorine and all fluoride compounds as measured by reference methods specified in §60.204, or equivalent or alternative methods.

(c) *Equivalent* P_2 O_5 feed means the quantity of phosphorus, expressed as phosphorous pentoxide, fed to the process.

[40 FR 33154, Aug. 6, 1975]

§60.202 Standard for fluorides.

(a) On and after the date on which the performance test required to be conducted by §60.8 is completed, no owner or operator subject to the provisions of this subpart shall cause to be discharged into the atmosphere from any affected facility any gases which contain total fluorides in excess of 10.0 g/metric ton of equivalent P_2O_5 feed (0.020 lb/ton).

[40 FR 33154, Aug. 6, 1975]

§60.203 Monitoring of operations.

(a) The owner or operator of any wet-process phosphoric acid plant subject to the provisions of this subpart shall install, calibrate, maintain, and operate a monitoring device which can be used to determine the mass flow of phosphorus-bearing feed material to the process. The monitoring device shall have an accuracy of ±5 percent over its operating range.

(b) The owner or operator of any wet-process phosphoric acid plant shall maintain a daily record of equivalent P_2O_5 feed by first determining the total

mass rate in metric ton/hr of phosphorus bearing feed using a monitoring device for measuring mass flowrate which meets the requirements of paragraph (a) of this section and then by proceeding according to § 60.204(b)(3).

(c) The owner or operator of any wet-process phosphoric acid subject to the provisions of this part shall install, calibrate, maintain, and operate a monitoring device which continuously measures and permanently records the total pressure drop across the process scrubbing system. The monitoring device shall have an accuracy of ±5 percent over its operating range.

[40 FR 3154, Aug. 6, 1975, as amended at 54 FR 6669, Feb. 14, 1989]

§ 60.204 Test methods and procedures.

(a) In conducting the performance tests required in § 60.8, the owner or operator shall use as reference methods and procedures the test methods in appendix A of this part or other methods and procedures as specified in this section, except as provided in § 60.8(b).

(b) The owner or operator shall determine compliance with the total fluorides standard in § 60.202 as follows:

(1) The emission rate (E) of total fluorides shall be computed for each run using the following equation:

$$E = \left(\sum_{i=1}^{N} C_{si} Q_{sdi} \right) / (PK)$$

where:

E=emission rate of total fluorides, g/metric ton (lb/ton) of equivalent P_2O_5 feed.

C_{si}=concentration of total fluorides from emission point ''i,'' mg/dscm (mg/dscf).

Q_{sdi}=volumetric flow rate of effluent gas from emission point ''i,'' dscm/hr (dscf/hr).

N=number of emission points associated with the affected facility.

P=equivalent P_2O_5 feed rate, metric ton/hr (ton/hr).

K=conversion factor, 1000 mg/g (453,600 mg/lb).

(2) Method 13A or 13B shall be used to determine the total fluorides concentration (C_{si}) and volumetric flow rate (Q_{sdi}) of the effluent gas from each of the emission points. The sampling time and sample volume for each run shall be at least 60 minutes and 0.85 dscm (30 dscf).

(3) The equivalent P_2O_5 feed rate (P) shall be computed for each run using the following equation:

$$P = M_p R_p$$

where:

M_p=total mass flow rate of phosphorus-bearing feed, metric ton/hr (ton/hr).

R_p=P_2O_5 content, decimal fraction.

(i) The accountability system of § 60.203(a) shall be used to determine the mass flow rate (M_p) of the phosphorus-bearing feed.

(ii) The Association of Official Analytical Chemists (AOAC) Method 9 (incorporated by reference—see § 60.17) shall be used to determine the P_2O_5 content (R_p) of the feed.

[54 FR 6669, Feb. 14, 1989]

Subpart U—Standards of Performance for the Phosphate Fertilizer Industry: Superphosphoric Acid Plants

§ 60.210 Applicability and designation of affected facility.

(a) The affected facility to which the provisions of this subpart apply is each superphosphoric acid plant having a design capacity of more than 15 tons of equivalent P_2O_5 feed per calendar day. For the purpose of this subpart, the affected facility includes any combination of: evaporators, hot wells, acid sumps, and cooling tanks.

(b) Any facility under paragraph (a) of this section that commences construction or modification after October 22, 1974, is subject to the requirements of this subpart.

[42 FR 37937, July 25, 1977, as amended at 48 FR 7129, Feb. 17, 1983]

§ 60.211 Definitions.

As used in this subpart, all terms not defined herein shall have the meaning given them in the Act and in subpart A of this part.

(a) *Superphosphoric acid plant* means any facility which concentrates wet-process phosphoric acid to 66 percent or greater P_2O_5 content by weight for eventual consumption as a fertilizer.

(b) *Total fluorides* means elemental fluorine and all fluoride compounds as measured by reference methods specified in § 60.214, or equivalent or alternative methods.

(c) *Equivalent* P_2 O_5 feed means the quantity of phosphorus, expressed as phosphorous pentoxide, fed to the process.

[40 FR 33155, Aug. 6, 1975]

§ 60.212 Standard for fluorides.

(a) On and after the date on which the performance test required to be conducted by § 60.8 is completed, no owner or operator subject to the provisions of this subpart shall cause to be discharged into the atmosphere from any affected facility any gases which contain total fluorides in excess of 5.0 g/metric ton of equivalent P_2O_5 feed (0.010 lb/ton).

[40 FR 33155, Aug. 6, 1975]

§ 60.213 Monitoring of operations.

(a) The owner or operator of any superphosphoric acid plant subject to the provisions of this subpart shall install, calibrate, maintain, and operate a flow monitoring device which can be used to determine the mass flow of phosphorus-bearing feed material to the process. The flow monitoring device shall have an accuracy of ±5 percent over its operating range.

(b) The owner or operator of any superphosphoric acid plant shall maintain a daily record of equivalent P_2O_5 feed by first determining the total mass rate in metric ton/hr of phosphorus-bearing feed using a flow monitoring device meeting the requirements of paragraph (a) of this section and then by proceeding according to § 60.214(b)(3).

(c) The owner or operator of any superphosphoric acid plant subject to the provisions of this part shall install, calibrate, maintain, and operate a monitoring device which continuously measures and permanently records the total pressure drop across the process scrubbing system. The monitoring device shall have an accuracy of ±5 percent over its operating range.

[40 FR 33155, Aug. 6, 1975, as amended at 54 FR 6670, Feb. 14, 1989]

§ 60.214 Test methods and procedures.

(a) In conducting the performance tests required in § 60.8, the owner or operator shall use as reference methods and procedures the test methods in appendix A of this part or other methods and procedures as specified in this section, except as provided in § 60.8(b).

(b) The owner or operator shall determine compliance with the total fluorides standard in § 60.212 as follows:

(1) The emission rate (E) of total fluorides shall be computed for each run using the following equation:

$$E = \left(\sum_{i=1}^{N} C_{si} Q_{sdi} \right) / (PK)$$

where:

E=emission rate of total fluorides, g/metric ton (lb/ton) of equivalent P_2O_5 feed.

C_{si}=concentration of total fluorides from emission point ''i,'' mg/dscm (mg/dscf).

Q_{sdi}=volumetric flow rate of effluent gas from emission point ''i,'' dscm/hr (dscf/hr).

N=number of emission points associated with the affected facility.

P=equivalent P_2O_5 feed rate, metric ton/hr (ton/hr).

K=conversion factor, 1000 mg/g (453,600 mg/lb).

(2) Method 13A or 13B shall be used to determine the total fluorides concentration (C_{si}) and volumetric flow rate (Q_{sdi}) of the effluent gas from each of the emission points. The sampling time and sample volume for each run shall be at least 60 minutes and 0.85 dscm (30 dscf).

(3) The equivalent P_2O_5 feed rate (P) shall be computed for each run using the following equation:

$$P = M_p R_p$$

where:

M_p=total mass flow rate of phosphorus-bearing feed, metric ton/hr (ton/hr).

R_p=P_2O_5 content, decimal fraction.

(i) The accountability system of § 60.213(a) shall be used to determine the mass flow rate (M_p) of the phosphorus-bearing feed.

(ii) The Association of Official Analytical Chemists (AOAC) Method 9 (incorporated by reference—see § 60.17) shall be used to determine the P_2O_5 content (R_p) of the feed.

[54 FR 6670, Feb. 14, 1989]

Subpart V—Standards of Performance for the Phosphate Fertilizer Industry: Diammonium Phosphate Plants

§ 60.220 Applicability and designation of affected facility.

(a) The affected facility to which the provisions of this subpart apply is each granular diammonium phosphate plant having a design capacity of more than 15 tons of equivalent P_2O_5 feed per calendar day. For the purpose of this subpart, the affected facility includes any combination of: reactors, granulators, dryers, coolers, screens, and mills.

(b) Any facility under paragraph (a) of this section that commences construction or modification after October 22, 1974, is subject to the requirements of this subpart.

[42 FR 37938, July 25, 1977, as amended at 48 FR 7129, Feb. 17, 1983]

§ 60.221 Definitions.

As used in this subpart, all terms not defined herein shall have the meaning given them in the Act and in subpart A of this part.

(a) *Granular diammonium phosphate plant* means any plant manufacturing granular diammonium phosphate by reacting phosphoric acid with ammonia.

(b) *Total fluorides* means elemental fluorine and all fluoride compounds as measured by reference methods specified in § 60.224, or equivalent or alternative methods.

(c) *Equivalent P_2O_5 feed* means the quantity of phosphorus, expressed as phosphorus pentoxide, fed to the process.

[40 FR 33155, Aug. 6, 1975]

§ 60.222 Standard for fluorides.

(a) On and after the date on which the performance test required to be conducted by § 60.8 is completed, no owner or operator subject to the provisions of this subpart shall cause to be discharged into the atmosphere from any affected facility any gases which contain total fluorides in excess of 30 g/metric ton of equivalent P_2O_5 feed (0.060 lb/ton).

[40 FR 33155, Aug. 6, 1975]

§ 60.223 Monitoring of operations.

(a) The owner or operator of any granular diammonium phosphate plant subject to the provisions of this subpart shall install, calibrate, maintain, and operate a flow monitoring device which can be used to determine the mass flow of phosphorus-bearing feed material to the process. The flow monitoring device shall have an accuracy of ±5 percent over its operating range.

(b) The owner or operator of any granular diammonium phosphate plant shall maintain a daily record of equivalent P_2O_5 feed by first determining the total mass rate in metric ton/hr of phosphorus-bearing feed using a flow monitoring device meeting the requirements of paragraph (a) of this section and then by proceeding according to § 60.224(b)(3).

(c) The owner or operator of any granular diammonium phosphate plant subject to the provisions of this part shall install, calibrate, maintain, and operate a monitoring device which continuously measures and permanently records the total pressure drop across the scrubbing system. The monitoring device shall have an accuracy of ±5 percent over its operating range.

[40 FR 33155, Aug. 6, 1975, as amended at 54 FR 6670, Feb. 14, 1989]

§ 60.224 Test methods and procedures.

(a) In conducting the performance tests required in § 60.8, the owner or operator shall use as reference methods and procedures the test methods in appendix A of this part or other methods and procedures as specified in this section, except as provided in § 60.8(b).

(b) The owner or operator shall determine compliance with the total fluorides standard in § 60.222 as follows:

(1) The emission rate (E) of total fluorides shall be computed for each run using the following equation:

$$E = \left(\sum_{i=1}^{N} C_{si} Q_{sdi} \right) / (PK)$$

where:

E=emission rate of total fluorides, g/metric ton (lb/ton) of equivalent P_2O_5 feed.

C_{si}=concentration of total fluorides from emission point ''i,'' mg/dscm (mg/dscf).

Q_{sdi}=volumetric flow rate of effluent gas from emission point ''i,'' dscm/hr (dscf/hr).

N=number of emission points associated with the affected facility.
P=equivalent P_2O_5 feed rate, metric ton/hr (ton/hr).
K=conversion factor, 1000 mg/g (453,600 mg/lb).

(2) Method 13A or 13B shall be used to determine the total fluorides concentration (C_{si}) and volumetric flow rate (Q_{sdi}) of the effluent gas from each of the emission points. The sampling time and sample volume for each run shall be at least 60 minutes and 0.85 dscm (30 dscf).

(3) The equivalent P_2O_5 feed rate (P) shall be computed for each run using the following equation:

$P=M_p R_p$
where:
M_p=total mass flow rate of phosphorus-bearing feed, metric ton/hr (ton/hr).
$R_p=P_2O_5$ content, decimal fraction.

(i) The accountability system of §60.223(a) shall be used to determine the mass flow rate (M_p) of the phosphorus-bearing feed.

(ii) The Association of Official Analytical Chemists (AOAC) Method 9 (incorported by reference—see §60.17) shall be used to determine the P_2O_5 content (R_p) of the feed.

[54 FR 6670, Feb. 14, 1989]

Subpart W—Standards of Performance for the Phosphate Fertilizer Industry: Triple Superphosphate Plants

§60.230 Applicability and designation of affected facility.

(a) The affected facility to which the provisions of this subpart apply is each triple superphosphate plant having a design capacity of more than 15 tons of equivalent P_2O_5 feed per calendar day. For the purpose of this subpart, the affected facility includes any combination of: mixers, curing belts (dens), reactors, granulators, dryers, cookers, screens, mills, and facilities which store run-of-pile triple superphosphate.

(b) Any facility under paragraph (a) of this section that commences construction or modification after October 22, 1974, is subject to the requirements of this subpart.

[42 FR 37938, July 25, 1977, as amended at 48 FR 7129, Feb. 17, 1983]

§60.231 Definitions.

As used in this subpart, all terms not defined herein shall have the meaning given them in the Act and in subpart A of this part.

(a) *Triple superphosphate plant* means any facility manufacturing triple superphosphate by reacting phosphate rock with phosphoric acid. A run-of-pile triple superphosphate plant includes curing and storing.

(b) *Run-of-pile triple superphosphate* means any triple superphosphate that has not been processed in a granulator and is composed of particles at least 25 percent by weight of which (when not caked) will pass through a 16 mesh screen.

(c) *Total fluorides* means elemental fluorine and all fluoride compounds as measured by reference methods specified in §60.234, or equivalent or alternative methods.

(d) *Equivalent P_2O_5 feed* means the quantity of phosphorus, expressed as phosphorus pentoxide, fed to the process.

[40 FR 33156, Aug. 6, 1975]

§60.232 Standard for fluorides.

(a) On and after the date on which the performance test required to be conducted by §60.8 is completed, no owner or operator subject to the provisions of this subpart shall cause to be discharged into the atmosphere from any affected facility any gases which contain total fluorides in excess of 100 g/metric ton of equivalent P_2O_5 feed (0.20 lb/ton).

[40 FR 33156, Aug. 6, 1975]

§60.233 Monitoring of operations.

(a) The owner or operator of any triple superphosphate plant subject to the provisions of this subpart shall install, calibrate, maintain, and operate a flow monitoring device which can be used to determine the mass flow of phosphorus-bearing feed material to the process. The flow monitoring device shall have an accuracy of ±5 percent over its operating range.

(b) The owner or operator of any triple superphosphate plant shall maintain a daily record of equivalent P_2O_5 feed by first determining the total

mass rate in metric ton/hr of phosphorus-bearing feed using a flow monitoring device meeting the requirements of paragraph (a) of this section and then by proceeding according to § 60.234(b)(3).

(c) The owner or operator of any triple superphosphate plant subject to the provisions of this part shall install, calibrate, maintain, and operate a monitoring device which continuously measures and permanently records the total pressure drop across the process scrubbing system. The monitoring device shall have an accuracy of ±5 percent over its operating range.

[40 FR 33156, Aug. 6, 1975, as amended at 54 FR 6670, Feb. 14, 1989]

§ 60.234 Test methods and procedures.

(a) In conducting the performance tests required in § 60.8, the owner or operator shall use as reference methods and procedures the test methods in appendix A of this part or other methods and procedures as specified in this section, except as provided in § 60.8(b).

(b) The owner or operator shall determine compliance with the total fluorides standards in § 60.232 as follows:

(1) The emission rate (E) of total fluorides shall be computed for each run using the following equation:

$$E = \left(\sum_{i=1}^{N} C_{si} Q_{sdi} \right) / (PK)$$

where:

E=emission rate of total fluorides, g/metric ton (lb/ton) of equivalent P_2O_5 feed.

C_{si}=concentration of total fluorides from emission point ''i,'' mg/dscm (mg/dscf).

Q_{sdi}=volumetric flow rate of effluent gas from emission point ''i,'' dscm/hr (dscf/hr).

N=number of emission points in the affected facility.

P=equivalent P_2O_5 feed rate, metric ton/hr (ton/hr).

K=conversion factor, 1000 mg/g (453,600 mg/lb).

(2) Method 13A or 13b shall be used to determine the total fluorides concentration (C_{si}) and volumetric flow rate (Q_{sdi}) of the effluent gas from each of the emission points. The sampling time and sample volume for each run shall be at least 60 minutes and 0.85 dscm (30 dscf).

(3) The equivalent P_2O_5 feed rate (P) shall be computed for each run using the following equation:

$$P = M_p R_p$$

where:

M_p total mass flow rate of phosphorus-bearing feed, metric ton/hr (ton/hr).

R_p=P_2O_5 content, decimal fraction.

(i) The accountability system of § 60.233(a) shall be used to determine the mass flow rate (M_p) of the phosphorus-bearing feed.

(ii) The Association of Official Analytical Chemists (AOAC) Method 9 (incorporated by reference—see § 60.17) shall be used to determine the P_2O_5 content (R_p) of the feed.

[54 FR 6670, Feb. 14, 1989; 54 FR 21344, May 17, 1989]

Subpart X—Standards of Performance for the Phosphate Fertilizer Industry: Granular Triple Superphosphate Storage Facilities

§ 60.240 Applicability and designation of affected facility.

(a) The affected facility to which the provisions of this subpart apply is each granular triple superphosphate storage facility. For the purpose of this subpart, the affected facility includes any combination of: Storage or curing piles, conveyors, elevators, screens and mills.

(b) Any facility under paragraph (a) of this section that commences construction or modification after October 22, 1974, is subject to the requirements of this subpart.

[42 FR 37938, July 25, 1977]

§ 60.241 Definitions.

As used in this subpart, all terms not defined herein shall have the meaning given them in the Act and in subpart A of this part.

(a) *Granular triple superphosphate storage facility* means any facility curing or storing fresh granular triple superphosphate.

(b) *Total fluorides* means elemental fluorine and all fluoride compounds as measured by reference methods specified in § 60.244, or equivalent or alternative methods.

(c) *Equivalent P_2O_5 stored* means the quantity of phosphorus, expressed as phosphorus pentoxide, being cured or stored in the affected facility.

(d) *Fresh granular triple superphosphate* means granular triple superphosphate produced within the preceding 72 hours.

[40 FR 33156, Aug. 6, 1975, as amended at 62 FR 18280, Apr. 15, 1997]

§ 60.242 Standard for fluorides.

(a) On and after the date on which the performance test required to be conducted by § 60.8 is completed, no owner or operator subject to the provisions of this subpart shall cause to be discharged into the atmosphere from any affected facility any gases which contain total fluorides in excess of 0.25 g/hr/metric ton of equivalent P_2O_5 stored (5.0×10^{-4} lb/hr/ton of equivalent P_2O_5 stored).

(b) No owner or operator subject to the provisions of this subpart shall ship fresh granular triple superphosphate from an affected facility.

[40 FR 33156, Aug. 6, 1975, as amended at 62 FR 18280, Apr. 15, 1997]

§ 60.243 Monitoring of operations.

(a) The owner or operator of any granular triple superphosphate storage facility subject to the provisions of this subpart shall maintain an accurate account of triple superphosphate in storage to permit the determination of the amount of equivalent P_2O_5 stored.

(b) The owner or operator of any granular triple superphosphate storage facility subject to the provisions of this subpart shall maintain a daily record of total equivalent P_2O_5 stored by multiplying the percentage P_2O_5 content, as determined by § 60.244(c)(3), times the total mass of granular triple superphosphate stored.

(c) The owner or operator of any granular triple superphosphate storage facility subject to the provisions of this subpart shall install, calibrate, maintain, and operate a monitoring device which continuously measures and permanently records the total pressure drop across any process scrubbing system. The monitoring device shall have an accuracy of ± 5 percent over its operating range.

(d) The owner or operator of any granular triple superphosphate storage facility subject to the provisions of this subpart shall develop for approval by the Administrator a site-specific methodology including sufficient recordkeeping for the purposes of demonstrating compliance with § 60.242 (b).

[40 FR 33156, Aug. 6, 1975, as amended at 54 FR 6671, Feb. 14, 1989; 62 FR 18280, Apr. 15, 1997]

§ 60.244 Test methods and procedures.

(a) The owner or operator shall conduct performance tests required in § 60.8 only when the following quantities of product are being cured or stored in the facility.

(1) Total granular triple superphosphate is at least 10 percent of the building capacity, and

(2) Fresh granular triple superphosphate is at least 6 percent of the total amount of triple superphosphate, or

(3) If the provision in paragraph (a)(2) of this section exceeds production capabilities for fresh granular triple superphosphate, fresh granular triple superphosphate is equal to at least 5 days maximum production.

(b) In conducting the performance tests required in § 60.8, the owner or operator shall use as reference methods and procedures the test methods in appendix A of this part or other methods and procedures as specified in this section, except as provided in § 60.8(b).

(c) The owner or operator shall determine compliance with the total fluorides standard in § 60.242 as follows:

(1) The emission rate (E) of total fluorides shall be computed for each run using the following equation:

$$E = \left(\sum_{i=1}^{N} C_{si} Q_{sdi} \right) / (PK)$$

where:

E=emission rate of total fluorides, g/hr/metric ton (lb/hr/ton) of equivalent P_2O_5 stored.

C_{si}=concentration of total fluorides from emission point ''i,'' mg/dscm (mg/dscf).

Q_{sdi}=volumetric flow rate of effluent gas from emission point ''i,'' dscm/hr (dscf/hr).

N=number of emission points in the affected facility.

P=equivalent P_2O_5 stored, metric tons (tons).

K=conversion factor, 1000 mg/g (453,600 mg/lb).

(2) Method 13A or 13B shall be used to determine the total fluorides concentration (C_{si}) and volumetric flow rate (Q_{sdi}) of the effluent gas from each of the emission points. The sampling time and sample volume for each run shall be at least 60 minutes and 0.85 dscm (30 dscf).

(3) The equivalent P_2O_5 feed rate (P) shall be computed for each run using the following equation:

$P = M_p R_p$

where:

M_p=amount of product in storage, metric ton (ton).

R_p=P_2O_5 content of product in storage, weight fraction.

(i) The accountability system of §60.243(a) shall be used to determine the amount of product (M_p) in storage.

(ii) The Association of Official Analytical Chemists (AOAC) Method 9 (incorporated by reference—see §60.17) shall be used to determine the P_2O_5 content (R_p) of the product in storage.

[54 FR 6671, Feb. 14, 1989, as amended at 62 FR 18280, Apr. 15, 1997]

Subpart Y—Standards of Performance for Coal Preparation Plants

§60.250 Applicability and designation of affected facility.

(a) The provisions of this subpart are applicable to any of the following affected facilities in coal preparation plants which process more than 200 tons per day: Thermal dryers, pneumatic coal-cleaning equipment (air tables), coal processing and conveying equipment (including breakers and crushers), coal storage systems, and coal transfer and loading systems.

(b) Any facility under paragraph (a) of this section that commences construction or modification after October 24, 1974, is subject to the requirements of this subpart.

[42 FR 37938, July 25, 1977; 42 FR 44812, Sept. 7, 1977]

§60.251 Definitions.

As used in this subpart, all terms not defined herein have the meaning given them in the Act and in subpart A of this part.

(a) *Coal preparation plant* means any facility (excluding underground mining operations) which prepares coal by one or more of the following processes: breaking, crushing, screening, wet or dry cleaning, and thermal drying.

(b) *Bituminous coal* means solid fossil fuel classified as bituminous coal by ASTM Designation D388–77 (incorporated by reference—see §60.17).

(c) *Coal* means all solid fossil fuels classified as anthracite, bituminous, subbituminous, or lignite by ASTM Designation D388–77 (incorporated by reference—see §60.17).

(d) *Cyclonic flow* means a spiraling movement of exhaust gases within a duct or stack.

(e) *Thermal dryer* means any facility in which the moisture content of bituminous coal is reduced by contact with a heated gas stream which is exhausted to the atmosphere.

(f) *Pneumatic coal-cleaning equipment* means any facility which classifies bituminous coal by size or separates bituminous coal from refuse by application of air stream(s).

(g) *Coal processing and conveying equipment* means any machinery used to reduce the size of coal or to separate coal from refuse, and the equipment used to convey coal to or remove coal and refuse from the machinery. This includes, but is not limited to, breakers, crushers, screens, and conveyor belts.

(h) *Coal storage system* means any facility used to store coal except for open storage piles.

(i) *Transfer and loading system* means any facility used to transfer and load coal for shipment.

[41 FR 2234, Jan. 15, 1976, as amended at 48 FR 3738, Jan. 27, 1983]

§60.252 Standards for particulate matter.

(a) On and after the date on which the performance test required to be conducted by §60.8 is completed, an owner or operator subject to the provisions of this subpart shall not cause to be discharged into the atmosphere from any thermal dryer gases which:

(1) Contain particulate matter in excess of 0.070 g/dscm (0.031 gr/dscf).

(2) Exhibit 20 percent opacity or greater.

(b) On and after the date on which the performance test required to be conducted by §60.8 is completed, an owner or operator subject to the provisions of this subpart shall not cause to be discharged into the atmosphere from any pneumatic coal cleaning equipment, gases which:

(1) Contain particulate matter in excess of 0.040 g/dscm (0.018 gr/dscf).

(2) Exhibit 10 percent opacity or greater.

(c) On and after the date on which the performance test required to be conducted by §60.8 is completed, an owner or operator subject to the provisions of this subpart shall not cause to be discharged into the atmosphere from any coal processing and conveying equipment, coal storage system, or coal transfer and loading system processing coal, gases which exhibit 20 percent opacity or greater.

[41 FR 2234, Jan. 15, 1976]

§60.253 Monitoring of operations.

(a) The owner or operator of any thermal dryer shall install, calibrate, maintain, and continuously operate monitoring devices as follows:

(1) A monitoring device for the measurement of the temperature of the gas stream at the exit of the thermal dryer on a continuous basis. The monitoring device is to be certified by the manufacturer to be accurate within ±3 °Fahrenheit.

(2) For affected facilities that use venturi scrubber emission control equipment:

(i) A monitoring device for the continuous measurement of the pressure loss through the venturi constriction of the control equipment. The monitoring device is to be certified by the manufacturer to be accurate within ±1 inch water gage.

(ii) A monitoring device for the continuous measurement of the water supply pressure to the control equipment. The monitoring device is to be certified by the manufacturer to be accurate within ±5 percent of design water supply pressure. The pressure sensor or tap must be located close to the water discharge point. The Administrator may be consulted for approval of alternative locations.

(b) All monitoring devices under paragraph (a) of this section are to be recalibrated annually in accordance with procedures under §60.13(b).

[41 FR 2234, Jan. 15, 1976, as amended at 54 FR 6671, Feb. 14, 1989]

§60.254 Test methods and procedures.

(a) In conducting the performance tests required in §60.8, the owner or operator shall use as reference methods and procedures the test methods in appendix A of this part or other methods and procedures as specified in this section, except as provided in §60.8(b).

(b) The owner or operator shall determine compliance with the particular matter standards in §60.252 as follows:

(1) Method 5 shall be used to determine the particulate matter concentration. The sampling time and sample volume for each run shall be at least 60 minutes and 0.85 dscm (30 dscf). Sampling shall begin no less than 30 minutes after startup and shall terminate before shutdown procedures begin.

(2) Method 9 and the procedures in §60.11 shall be used to determine opacity.

[54 FR 6671, Feb. 14, 1989]

Subpart Z—Standards of Performance for Ferroalloy Production Facilities

SOURCE: 41 FR 18501, May 4, 1976, unless otherwise noted.

§60.260 Applicability and designation of affected facility.

(a) The provisions of this subpart are applicable to the following affected facilities: Electric submerged arc furnaces which produce silicon metal, ferrosilicon, calcium silicon, silicomanganese zirconium, ferrochrome silicon, silvery iron, high-carbon ferrochrome, charge chrome, standard ferromanganese, silicomanganese, ferromanganese silicon, or calcium carbide; and dust-handling equipment.

(b) Any facility under paragraph (a) of this section that commences construction or modification after October

21, 1974, is subject to the requirements of this subpart.

[42 FR 37938, July 25, 1977]

§ 60.261 Definitions.

As used in this subpart, all terms not defined herein shall have the meaning given them in the Act and in subpart A of this part.

(a) *Electric submerged arc furnace* means any furnace wherein electrical energy is converted to heat energy by transmission of current between electrodes partially submerged in the furnace charge.

(b) *Furnace charge* means any material introduced into the electric submerged arc furnace, and may consist of, but is not limited to, ores, slag, carbonaceous material, and limestone.

(c) *Product change* means any change in the composition of the furnace charge that would cause the electric submerged arc furnace to become subject to a different mass standard applicable under this subpart.

(d) *Slag* means the more or less completely fused and vitrified matter separated during the reduction of a metal from its ore.

(e) *Tapping* means the removal of slag or product from the electric submerged arc furnace under normal operating conditions such as removal of metal under normal pressure and movement by gravity down the spout into the ladle.

(f) *Tapping period* means the time duration from initiation of the process of opening the tap hole until plugging of the tap hole is complete.

(g) *Furnace cycle* means the time period from completion of a furnace product tap to the completion of the next consecutive product tap.

(h) *Tapping station* means that general area where molten product or slag is removed from the electric submerged arc furnace.

(i) *Blowing tap* means any tap in which an evolution of gas forces or projects jets of flame or metal sparks beyond the ladle, runner, or collection hood.

(j) *Furnace power input* means the resistive electrical power consumption of an electric submerged arc furnace as measured in kilowatts.

(k) *Dust-handling equipment* means any equipment used to handle particulate matter collected by the air pollution control device (and located at or near such device) serving any electric submerged arc furnace subject to this subpart.

(l) *Control device* means the air pollution control equipment used to remove particulate matter generated by an electric submerged arc furnace from an effluent gas stream.

(m) *Capture system* means the equipment (including hoods, ducts, fans, dampers, etc.) used to capture or transport particulate matter generated by an affected electric submerged arc furnace to the control device.

(n) *Standard ferromanganese* means that alloy as defined by ASTM Designation A99–76 (incorporated by reference—see § 60.17).

(o) *Silicomanganese* means that alloy as defined by ASTM Designation A483–64 (Reapproved 1974) (incorporated by reference—see § 60.17).

(p) *Calcium carbide* means material containing 70 to 85 percent calcium carbide by weight.

(q) *High-carbon ferrochrome* means that alloy as defined by ASTM Designation A101–73 (incorporated by reference—see § 60.17) grades HC1 through HC6.

(r) *Charge chrome* means that alloy containing 52 to 70 percent by weight chromium, 5 to 8 percent by weight carbon, and 3 to 6 percent by weight silicon.

(s) *Silvery iron* means any ferrosilicon, as defined by ASTM Designation A100–69 (Reapproved 1974) (incorporated by reference—see § 60.17), which contains less than 30 percent silicon.

(t) *Ferrochrome silicon* means that alloy as defined by ASTM Designation A482–76 (incorporated by reference—see § 60.17).

(u) *Silicomanganese zirconium* means that alloy containing 60 to 65 percent by weight silicon, 1.5 to 2.5 percent by weight calcium, 5 to 7 percent by weight zirconium, 0.75 to 1.25 percent by weight aluminum, 5 to 7 percent by weight manganese, and 2 to 3 percent by weight barium.

(v) *Calcium silicon* means that alloy as defined by ASTM Designation A495–

76 (incorporated by reference—see § 60.17).

(w) *Ferrosilicon* means that alloy as defined by ASTM Designation A100–69 (Reapproved 1974) (incorporated by reference—see § 60.17) grades A, B, C, D, and E, which contains 50 or more percent by weight silicon.

(x) *Silicon metal* means any silicon alloy containing more than 96 percent silicon by weight.

(y) *Ferromanganese silicon* means that alloy containing 63 to 66 percent by weight manganese, 28 to 32 percent by weight silicon, and a maximum of 0.08 percent by weight carbon.

[41 FR 18501, May 4, 1976; 41 FR 20659, May 20, 1976, as amended at 48 FR 3738, Jan. 27, 1983]

§ 60.262 Standard for particulate matter.

(a) On and after the date on which the performance test required to be conducted by § 60.8 is completed, no owner or operator subject to the provisions of this subpart shall cause to be discharged into the atmosphere from any electric submerged arc furnace any gases which:

(1) Exit from a control device and contain particulate matter in excess of 0.45 kg/MW–hr (0.99 lb/MW–hr) while silicon metal, ferrosilicon, calcium silicon, or silicomanganese zirconium is being produced.

(2) Exit from a control device and contain particulate matter in excess of 0.23 kg/MW–hr (0.51 lb/MW–hr) while highcarbon ferrochrome, charge chrome, standard ferromanganese, silicomanganese, calcium carbide, ferrochrome silicon, ferromanganese silicon, or silvery iron is being produced.

(3) Exit from a control device and exhibit 15 percent opacity or greater.

(4) Exit from an electric submerged arc furnace and escape the capture system and are visible without the aid of instruments. The requirements under this subparagraph apply only during periods when flow rates are being established under § 60.265(d).

(5) Escape the capture system at the tapping station and are visible without the aid of instruments for more than 40 percent of each tapping period. There are no limitations on visible emissions under this subparagraph when a blowing tap occurs. The requirements under this subparagraph apply only during periods when flow rates are being established under § 60.265(d).

(b) On and after the date on which the performance test required to be conducted by § 60.8 is completed, no owner or operator subject to the provisions of this subpart shall cause to be discharged into the atmosphere from any dust-handling equipment any gases which exhibit 10 percent opacity or greater.

§ 60.263 Standard for carbon monoxide.

(a) On and after the date on which the performance test required to be conducted by § 60.8 is completed, no owner or operator subject to the provisions of this subpart shall cause to be discharged in to the atmosphere from any electric submerged arc furnace any gases which contain, on a dry basis, 20 or greater volume percent of carbon monoxide. Combustion of such gases under conditions acceptable to the Administrator constitutes compliance with this section. Acceptable conditions include, but are not limited to, flaring of gases or use of gases as fuel for other processes.

§ 60.264 Emission monitoring.

(a) The owner or operator subject to the provisions of this subpart shall install, calibrate, maintain and operate a continuous monitoring system for measurement of the opacity of emissions discharged into the atmosphere from the control device(s).

(b) For the purpose of reports required under § 60.7(c), the owner or operator shall report as excess emissions all six-minute periods in which the average opacity is 15 percent or greater.

(c) The owner or operator subject to the provisions of this subpart shall submit a written report of any product change to the Administrator. Reports of product changes must be postmarked not later than 30 days after implementation of the product change.

§ 60.265 Monitoring of operations.

(a) The owner or operator of any electric submerged arc furnace subject to the provisions of this subpart shall maintain daily records of the following information:

(1) Product being produced.

(2) Description of constituents of furnace charge, including the quantity, by weight.

(3) Time and duration of each tapping period and the identification of material tapped (slag or product.)

(4) All furnace power input data obtained under paragraph (b) of this section.

(5) All flow rate data obtained under paragraph (c) of this section or all fan motor power consumption and pressure drop data obtained under paragraph (e) of this section.

(b) The owner or operator subject to the provisions of this subpart shall install, calibrate, maintain, and operate a device to measure and continuously record the furnace power input. The furnace power input may be measured at the output or input side of the transformer. The device must have an accuracy of ±5 percent over its operating range.

(c) The owner or operator subject to the provisions of this subpart shall install, calibrate, and maintain a monitoring device that continuously measures and records the volumetric flow rate through each separately ducted hood of the capture system, except as provided under paragraph (e) of this section. The owner or operator of an electric submerged arc furnace that is equipped with a water cooled cover which is designed to contain and prevent escape of the generated gas and particulate matter shall monitor only the volumetric flow rate through the capture system for control of emissions from the tapping station. The owner or operator may install the monitoring device(s) in any appropriate location in the exhaust duct such that reproducible flow rate monitoring will result. The flow rate monitoring device must have an accuracy of ±10 percent over its normal operating range and must be calibrated according to the manufacturer's instructions. The Administrator may require the owner or operator to demonstrate the accuracy of the monitoring device relative to Methods 1 and 2 of appendix A to this part.

(d) When performance tests are conducted under the provisions of §60.8 of this part to demonstrate compliance with the standards under §§60.262(a) (4) and (5), the volumetric flow rate through each separately ducted hood of the capture system must be determined using the monitoring device required under paragraph (c) of this section. The volumetric flow rates must be determined for furnace power input levels at 50 and 100 percent of the nominal rated capacity of the electric submerged arc furnace. At all times the electric submerged arc furnace is operated, the owner or operator shall maintain the volumetric flow rate at or above the appropriate levels for that furnace power input level determined during the most recent performance test. If emissions due to tapping are captured and ducted separately from emissions of the electric submerged arc furnace, during each tapping period the owner or operator shall maintain the exhaust flow rates through the capture system over the tapping station at or above the levels established during the most recent performance test. Operation at lower flow rates may be considered by the Administrator to be unacceptable operation and maintenance of the affected facility. The owner or operator may request that these flow rates be reestablished by conducting new performance tests under §60.8 of this part.

(e) The owner or operator may as an alternative to paragraph (c) of this section determine the volumetric flow rate through each fan of the capture system from the fan power consumption, pressure drop across the fan and the fan performance curve. Only data specific to the operation of the affected electric submerged arc furnace are acceptable for demonstration of compliance with the requirements of this paragraph. The owner or operator shall maintain on file a permanent record of the fan performance curve (prepared for a specific temperature) and shall:

(1) Install, calibrate, maintain, and operate a device to continuously measure and record the power consumption of the fan motor (measured in kilowatts), and

(2) Install, calibrate, maintain, and operate a device to continuously measure and record the pressure drop across the fan. The fan power consumption and pressure drop measurements must be synchronized to allow real time

comparisions of the data. The monitoring devices must have an accuracy of ±5 percent over their normal operating ranges.

(f) The volumetric flow rate through each fan of the capture system must be determined from the fan power consumption, fan pressure drop, and fan performance curve specified under paragraph (e) of this section, during any performance test required under § 60.8 to demonstrate compliance with the standards under §§ 60.262(a)(4) and (5). The owner or operator shall determine the volumetric flow rate at a representative temperature for furnace power input levels of 50 and 100 percent of the nominal rated capacity of the electric submerged arc furnace. At all times the electric submerged arc furnace is operated, the owner or operator shall maintain the fan power consumption and fan pressure drop at levels such that the volumetric flow rate is at or above the levels established during the most recent performance test for that furnace power input level. If emissions due to tapping are captured and ducted separately from emissions of the electric submerged arc furnace, during each tapping period the owner or operator shall maintain the fan power consumption and fan pressure drop at levels such that the volumetric flow rate is at or above the levels established during the most recent performance test. Operation at lower flow rates may be considered by the Administrator to be unacceptable operation and maintenance of the affected facility. The owner or operator may request that these flow rates be reestablished by conducting new performance tests under § 60.8. The Administrator may require the owner or operator to verify the fan performance curve by monitoring necessary fan operating parameters and determining the gas volume moved relative to Methods 1 and 2 of appendix A to this part.

(g) All monitoring devices required under paragraphs (c) and (e) of this section are to be checked for calibration annually in accordance with the procedures under § 60.13(b).

§ 60.266 Test methods and procedures.

(a) During any performance test required in § 60.8, the owner or operator shall not allow gaseous diluents to be added to the effluent gas stream after the fabric in an open pressurized fabric filter collector unless the total gas volume flow from the collector is accurately determined and considered in the determination of emissions.

(b) In conducting the performance tests required in § 60.8, the owner or operator shall use as reference methods and procedures the test methods in appendix A of this part or other methods and procedures as specified in this section, except as provided in § 60.8(b).

(c) The owner or operator shall determine compliance with the particulate matter standards in § 60.262 as follows:

(1) The emission rate (E) of particulate matter shall be computed for each run using the following equation:

$$E = \left[\left(\sum_{i=1}^{N} C_{si}\, Q_{sdi}\right)\right] / (PK)$$

where:

E=emission rate of particulate matter, kg/MW-hr (1b/MW-hr).

n=total number of exhaust streams at which emissions is quantified.

c_{si}=concentration of particulate matter from exhaust stream ''i'', g/dscm (g/dscf).

Q_{sdi}=volumetric flow rate of effluent gas from exhaust stream ''i'', dscm/hr (dscf/hr).

P=average furnace power input, MW.

K=conversion factor, 1000 g/kg (453.6 g/lb).

(2) Method 5 shall be used to determine the particulate matter concentration (c_{si}) and volumetric flow rate (Q_{sdi}) of the effluent gas, except that the heating systems specified in sections 2.1.2 and 2.1.6 are not to be used when the carbon monoxide content of the gas stream exceeds 10 percent by volume, dry basis. If a flare is used to comply with § 60.263, the sampling site shall be upstream of the flare. The sampling time shall include an integral number of furnace cycles.

(i) When sampling emissions from open electric submerged arc furnaces with wet scrubber control devices, sealed electric submerged arc furnaces, or semienclosed electric arc furnaces, the sampling time and sample volume for each run shall be at least 60 minutes and 1.80 dscm (63.6 dscf).

(ii) When sampling emissions from other types of installations, the sampling time and sample volume for each

run shall be at least 200 minutes and 5.70 dscm (200 dscf).

(3) The measurement device of § 60.265(b) shall be used to determine the average furnace power input (P) during each run.

(4) Method 9 and the procedures in § 60.11 shall be used to determine opacity.

(5) The emission rate correction factor, integrated sampling procedure of Method 3B shall be used to determine the CO concentration. The sample shall be taken simultaneously with each particulate matter sample.

(d) During the particulate matter run, the maximum open hood area (in hoods with segmented or otherwise moveable sides) under which the process is expected to be operated and remain in compliance with all standards shall be recorded. Any future operation of the hooding system with open areas in excess of the maximum is not permitted.

(e) To comply with § 60.265 (d) or (f), the owner or operator shall use the monitoring devices in § 60.265 (c) or (e) to make the required measurements as determined during the performance test.

[54 FR 6671, Feb. 14, 1989; 54 FR 21344, May 17, 1989, as amended at 55 FR 5212, Feb. 14, 1990]

Subpart AA—Standards of Performance for Steel Plants: Electric Arc Furnaces Constructed After October 21, 1974, and On or Before August 17, 1983

§ 60.270 Applicability and designation of affected facility.

(a) The provisions of this subpart are applicable to the following affected facilities in steel plants that produce carbon, alloy, or specialty steels: electric arc furnaces and dust-handling systems.

(b) The provisions of this subpart apply to each affected facility identified in paragraph (a) of this section that commenced construction, modification, or reconstruction after October 21, 1974, and on or before August 17, 1983.

[49 FR 43843, Oct. 31, 1984]

§ 60.271 Definitions.

As used in this subpart, all terms not defined herein shall have the meaning given them in the Act and in subpart A of this part.

(a) *Electric arc furnace (EAF)* means a furnace that produces molten steel and heats the charge materials with electric arcs from carbon electrodes. Furnaces that continuously feed direct-reduced iron ore pellets as the primary source of iron are not affected facilities within the scope of this definition.

(b) *Dust-handling equipment* means any equipment used to handle particulate matter collected by the control device and located at or near the control device for an EAF subject to this subpart.

(c) *Control device* means the air pollution control equipment used to remove particulate matter generated by an EAF(s) from the effluent gas stream.

(d) *Capture system* means the equipment (including ducts, hoods, fans, dampers, etc.) used to capture or transport particulate matter generated by an EAF to the air pollution control device.

(e) *Charge* means the addition of iron and steel scrap or other materials into the top of an electric arc furnace.

(f) *Charging period* means the time period commencing at the moment an EAF starts to open and ending either three minutes after the EAF roof is returned to its closed position or six minutes after commencement of opening of the roof, whichever is longer.

(g) *Tap* means the pouring of molten steel from an EAF.

(h) *Tapping period* means the time period commencing at the moment an EAF begins to pour molten steel and ending either three minutes after steel ceases to flow from an EAF, or six minutes after steel begins to flow, whichever is longer.

(i) *Meltdown and refining* means that phase of the steel production cycle when charge material is melted and undesirable elements are removed from the metal.

(j) *Meltdown and refining period* means the time period commencing at the termination of the initial charging period

and ending at the initiation of the tapping period, excluding any intermediate charging periods and times when power to the EAF is off.

(k) *Shop opacity* means the arithmetic average of 24 or more opacity observations of emissions from the shop taken in accordance with Method 9 of appendix A of this part for the applicable time periods.

(l) *Heat time* means the period commencing when scrap is charged to an empty EAF and terminating when the EAF tap is completed.

(m) *Shop* means the building which houses one or more EAF's.

(n) *Direct shell evacuation system* means any system that maintains a negative pressure within the EAF above the slag or metal and ducts these emissions to the control device.

[40 FR 43852, Sept. 23, 1975, as amended at 49 FR 43843, Oct. 31, 1984; 64 FR 10109, Mar. 2, 1999]

§ 60.272 Standard for particulate matter.

(a) On and after the date on which the performance test required to be conducted by §60.8 is completed, no owner or operator subject to the provisions of this subpart shall cause to be discharged into the atmosphere from an electric arc furnace any gases which:

(1) Exit from a control device and contain particulate matter in excess of 12 mg/dscm (0.0052 gr/dscf).

(2) Exit from a control device and exhibit three percent opacity or greater.

(3) Exit from a shop and, due solely to operations of any EAF(s), exhibit 6 percent opacity or greater except:

(i) Shop opacity less than 20 percent may occur during charging periods.

(ii) Shop opacity less than 40 percent may occur during tapping periods.

(iii) The shop opacity standards under paragraph (a)(3) of this section shall apply only during periods when the monitoring parameter limits specified in §60.274(b) are being established according to §60.274(c) and (g), unless the owner or operator elects to perform daily shop opacity observations in lieu of furnace static pressure monitoring as provided for under §60.273(d).

(iv) Where the capture system is operated such that the roof of the shop is closed during the charge and the tap, and emissions to the atmosphere are prevented until the roof is opened after completion of the charge or tap, the shop opacity standards under paragraph (a)(3) of this section shall apply when the roof is opened and shall continue to apply for the length of time defined by the charging and/or tapping periods.

(b) On and after the date on which the performance test required to be conducted by §60.8 is completed, no owner or operator subject to the provisions of this subpart shall cause to be discharged into the atmosphere from dust-handling equipment any gases which exhibit 10 percent opacity or greater.

[40 FR 43852, Sept. 23, 1975, as amended at 49 FR 43843, Oct. 31, 1984; 64 FR 10109, Mar. 2, 1999]

§ 60.273 Emission monitoring.

(a) A continuous monitoring system for the measurement of the opacity of emissions discharged into the atmosphere from the control device(s) shall be installed, calibrated, maintained, and operated by the owner or operator subject to the provisions of this subpart.

(b) For the purpose of reports under §60.7(c), all six-minute periods during which the average opacity is three percent or greater shall indicate a period of excess emission, and shall be reported to the Administrator semi-annually.

(c) A continuous monitoring system is not required on any modular, multiple-stack, negative-pressure or positive-pressure fabric filter if observations of the opacity of the visible emissions from the control device are performed by a certified visible emission observer as follows: Visible emission observations shall be conducted at least once per day when the furnace is operating in the melting and refining period. These observations shall be taken in accordance with Method 9, and, for at least three 6-minute periods, the opacity shall be recorded for any point(s) where visible emissions are observed. Where it is possible to determine that a number of visible emission sites relate to only one incident of the visible emission, only one set of

three 6-minute observations will be required. In this case, Method 9 observations must be made for the site of highest opacity that directly relates to the cause (or location) of visible emissions observed during a single incident. Records shall be maintained of any 6-minute average that is in excess of the emission limit specified in §60.272(a) of this subpart.

(d) A furnace static pressure monitoring device is not required on any EAF equipped with a DEC system if observations of shop opacity are performed by a certified visible emission observer as follows: Shop opacity observations shall be conducted at least once per day when the furnace is operating in the meltdown and refining period. Shop opacity shall be determined as the arithmetic average of 24 or more consecutive 15-second opacity observations of emissions from the shop taken in accordance with Method 9. Shop opacity shall be recorded for any point(s) where visible emissions are observed in proximity to an affected EAF. Where it is possible to determine that a number of visible emission sites relate to only one incident of visible emissions, only one observation of shop opacity will be required. In this case, the shop opacity observations must be made for the site of highest opacity that directly relates to the cause (or location) of visible emissions observed during a single incident.

[40 FR 43852, Sept. 23, 1975, as amended at 49 FR 43843, Oct. 31, 1984; 54 FR 6672. Feb. 14, 1989; 64 FR 10109, Mar. 2, 1999]

§60.274 Monitoring of operations.

(a) The owner or operator subject to the provisions of this subpart shall maintain records daily of the following information:

(1) Time and duration of each charge;

(2) Time and duration of each tap;

(3) All flow rate data obtained under paragraph (b) of this section, or equivalent obtained under paragraph (d) of this section; and

(4) All pressure data obtained under paragraph (e) of this section.

(b) Except as provided under paragraph (d) of this section, the owner or operator subject to the provisions of this subpart shall check and record on a once-per-shift basis furnace static pressure (if a DEC system is in use, and a furnace static pressure gauge is installed according to paragraph (f) of this section) and either: check and record the control system fan motor amperes and damper positions on a once-per-shift basis; install, calibrate, and maintain a monitoring device that continuously records the volumetric flow rate through each separately ducted hood; or install, calibrate, and maintain a monitoring device that continuously records the volumetric flow rate at the control device inlet and check and record damper positions on a once-per-shift basis. The monitoring device(s) may be installed in any appropriate location in the exhaust duct such that reproducible flow rate monitoring will result. The flow rate monitoring device(s) shall have an accuracy of ±10 percent over its normal operating range and shall be calibrated according to the manufacturer's instructions. The Administrator may require the owner or operator to demonstrate the accuracy of the monitoring device(s) relative to Methods 1 and 2 of appendix A of this part.

(c) When the owner or operator of an EAF is required to demonstrate compliance with the standards under §60.272(a)(3) and at any other time the Administrator may require that (under section 114 of the Act, as amended) either: the control system fan motor amperes and all damper positions; the volumetric flow rate through each separately ducted hood; or the volumetric flow rate at the control device inlet and all damper positions shall be determined during all periods in which a hood is operated for the purpose of capturing emissions from the EAF subject to paragraph (b)(1) or (b)(2) of this section. The owner or operator may petition the Administrator for reestablishment of these parameters whenever the owner or operator can demonstrate to the Administrator's satisfaction that the EAF operating conditions upon which the parameters were previously established are no longer applicable. The values of these parameters as determined during the most recent demonstration of compliance shall be maintained at the appropriate level for each applicable period. Operation at

other than baseline values may be subject to the requirements of § 60.276(a).

(d) The owner or operator may petition the Administrator to approve any alternative method that will provide a continuous record of operation of each emission capture system.

(e) The owner or operator shall perform monthly operational status inspections of the equipment that is important to the performance of the total capture system (i.e., pressure sensors, dampers, and damper switches). This inspection shall include observations of the physical appearance of the equipment (e.g., presence of hole in ductwork or hoods, flow constrictions caused by dents or accumulated dust in ductwork, and fan erosion). Any deficiencies shall be noted and proper maintenance performed.

(f) Except as provided for under § 60.273(d), where emissions during any phase of the heat time are controlled by use of a direct shell evacuation system, the owner or operator shall install, calibrate, and maintain a monitoring device that continuously records the pressure in the free space inside the EAF. The pressure shall be recorded as 15-minute integrated averages. The monitoring device may be installed in any appropriate location in the EAF or DEC duct prior to the introduction of ambient air such that reproducible results will be obtained. The pressure monitoring device shall have an accuracy of ±5 mm of water gauge over its normal operating range and shall be calibrated according to the manufacturer's instructions.

(g) Except as provided for under § 60.273(d), when the owner or operator of an EAF is required to demonstrate compliance with the standard under § 60.272(a)(3) and at any other time the Administrator may require (under section 114 of the Act, as amended), the pressure in the free space inside the furnace shall be determined during the meltdown and refining period(s) using the monitoring device under paragraph (f) of this section. The owner or operator may petition the Administrator for reestablishment of the 15-minute integrated average pressure whenever the owner or operator can demonstrate to the Administrator's satisfaction that the EAF operating conditions upon which the pressures were previously established are no longer applicable. The pressure determined during the most recent demonstration of compliance shall be maintained at all times the EAF is operating in a meltdown and refining period. Operation at higher pressures may be considered by the Administrator to be unacceptable operation and maintenance of the affected facility.

(h) Where the capture system is designed and operated such that all emissions are captured and ducted to a control device, the owner or operator shall not be subject to the requirements of this section.

(i) During any performance test required under § 60.8, and for any report thereof required by § 60.275(c) of this subpart or to determine compliance with § 60.272(a)(3) of this subpart, the owner or operator shall monitor the following information for all heats covered by the test:

(1) Charge weights and materials, and tap weights and materials;

(2) Heat times, including start and stop times, and a log of process operation, including periods of no operation during testing and the pressure inside the furnace where direct-shell evacuation systems are used;

(3) Control device operation log; and

(4) Continuous monitor or Reference Method 9 data.

[40 FR 43852, Sept. 23, 1975, as amended at 49 FR 43843, Oct. 31, 1984; 64 FR 10110, Mar. 2, 1999]

§ 60.275 Test methods and procedures.

(a) During performance tests required in § 60.8, the owner or operator shall not add gaseous diluent to the effluent gas after the fabric in any pressurized fabric collector, unless the amount of dilution is separately determined and considered in the determination of emissions.

(b) When emissions from any EAF(s) are combined with emissions from facilities not subject to the provisions of this subpart but controlled by a common capture system and control device, the owner or operator shall use either or both of the following procedures during a performance test (see also § 60.276(b)):

(1) Determine compliance using the combined emissions.

(2) Use a method that is acceptable to the Administrator and that compensates for the emissions from the facilities not subject to the provisions of this subpart.

(c) When emissions from any EAF(s) are combined with emissions from facilities not subject to the provisions of this subpart, the owner or operator shall use either or both of the following procedures to demonstrate compliance with §60.272(a)(3):

(1) Determine compliance using the combined emissions.

(2) Shut down operation of facilities not subject to the provisions of this subpart during the performance test.

(d) In conducting the performance tests required in §60.8, the owner or operator shall use as reference methods and procedures the test methods in appendix A of this part or other methods and procedures as specified in this section, except as provided in §60.8(b).

(e) The owner or operator shall determine compliance with the particulate matter standards in §60.272 as follows:

(1) Method 5 shall be used for negative-pressure fabric filters and other types of control devices and Method 5D shall be used for positive-pressure fabric filters to determine the particular matter concentration and, if applicable, the volumetric flow rate of the effluent gas. The sampling time and sample volume for each run shall be at least 4 hours and 4.5 dscm (160 dscf) and, when a single EAF is sampled, the sampling time shall include an integral number of heats.

(2) When more then one control device serves the EAF(s) being tested, the concentration of particulate matter shall be determined using the following equation:

$$c_{st} = \left[\sum_{i=1}^{n} \left(c_{si}\, Q_{sdi}\right)\right] / \sum_{i=1}^{n} Q_{sdi}$$

where:

c_{st}=average concentration of particulate matter, mg/dscm (gr/dscf).

c_{si}=concentration of particulate matter from control device ''i'', mg/dscm (gr/dscf).

n=total number of control devices tested.

Q_{sdi}=volumetric flow rate of stack gas from control device ''i'', dscm/hr (dscf/hr).

(3) Method 9 and the procedures of §60.11 shall be used to determine opacity.

(4) To demonstrate compliance with §60.272(a) (1), (2), and (3), the test runs shall be conducted concurrently, unless inclement weather interferes.

(f) To comply with §60.274 (c), (f), (g), and (i), the owner or operator shall obtain the information in these paragraphs during the particulate matter runs.

(g) Where emissions from any EAF(s) are combined with emissions from facilities not subject to the provisions of this subpart but controlled by a common capture system and control device, the owner or operator may use any of the following procedures during a performance test:

(1) Base compliance on control of the combined emissions.

(2) Utilize a method acceptable to the Administrator which compensates for the emissions from the facilities not subject to the provisions of this subpart.

(3) Any combination of the criteria of paragraphs (g)(1) and (g)(2) of this section.

(h) Where emissions from any EAF(s) are combined with emissions from facilities not subject to the provisions of this subpart, the owner or operator may use any of the following procedures for demonstrating compliance with §60.272(a)(3):

(1) Base compliance on control of the combined emissions.

(2) Shut down operation of facilities not subject to the provisions of this subpart.

(3) Any combination of the criteria of paragraphs (h)(1) and (h)(2) of this section.

(i) Visible emissions observations of modular, multiple-stack, negative-pressure or positive-pressure fabric filters shall occur at least once per day of operation. The observations shall occur when the furnace is operating in the melting and refining period. These observations shall be taken in accordance with Method 9, and, for at least three 6-minute periods, the opacity shall be recorded for any point(s) where visible emissions are observed. Where it is possible to determine that a number of visible emission sites relate to only

one incident of the visible emissions, only one set of three 6-minute observations will be required. In the case, Reference Method 9 observations must be made for the site of highest opacity that directly relates to the cause (or location) of visible emissions observed during a single incident. Records shall be maintained of any 6-minute average that is in excess of the emission limit specified in § 60.272(a) of this subpart.

(j) Unless the presence of inclement weather makes concurrent testing infeasible, the owner or operator shall conduct concurrently the performance tests required under § 60.8 to demonstrate compliance with § 60.272(a) (1), (2), and (3) of this subpart.

[40 FR 43852, Sept. 23, 1975, as amended at 49 FR 43844, Oct. 31, 1984; 54 FR 6672, Feb. 14, 1989; 54 FR 21344, May 17, 1989]

§ 60.276 Recordkeeping and reporting requirements.

(a) Operation at a furnace static pressure that exceeds the value established under § 60.274(f) and either operation of control system fan motor amperes at valves exceeding ±15 percent of the value established under § 60.274(c) or operation at flow rates lower than those established under § 60.274(c) may be considered by the Administrator to be unacceptable operation and maintenance of the affected facility. Operation at such values shall be reported to Administrator semiannually.

(b) When the owner or operator of an EAF is required to demonstrate compliance with the standard under § 60.275 (b)(2) or a combination of (b)(1) and (b)(2), the owner or operator shall obtain approval from the Administrator of the procedure(s) that will be used to determine compliance. Notification of the procedure(s) to be used must be postmarked 30 days prior to the performance test.

(c) For the purpose of this subpart, the owner or operator shall conduct the demonstration of compliance with § 60.272(a) of this subpart and furnish the Administrator a written report of the results of the test. This report shall include the following information:

(1) Facility name and address;

(2) Plant representative;

(3) Make and model of process, control device, and continuous monitoring equipment;

(4) Flow diagram of process and emission capture equipment including other equipment or process(es) ducted to the same control device;

(5) Rated (design) capacity of process equipment;

(6) Those data required under § 60.274(i) of this subpart;

(i) List of charge and tap weights and materials;

(ii) Heat times and process log;

(iii) Control device operation log; and

(iv) Continuous monitor or Reference Method 9 data.

(7) Test dates and test times;

(8) Test company;

(9) Test company representative;

(10) Test observers from outside agency;

(11) Description of test methodology used, including any deviation from standard reference methods

(12) Schematic of sampling location;

(13) Number of sampling points;

(14) Description of sampling equipment;

(15) Listing of sampling equipment calibrations and procedures;

(16) Field and laboratory data sheets;

(17) Description of sample recovery procedures;

(18) Sampling equipment leak check results;

(19) Description of quality assurance procedures;

(20) Description of analytical procedures;

(21) Notation of sample blank corrections; and

(22) Sample emission calculations.

(d) The owner or operator shall maintain records of all shop opacity observations made in accordance with § 60.273(d). All shop opacity observations in excess of the emission limit specified in § 60.272(a)(3) of this subpart shall indicate a period of excess emission, and shall be reported to the Administrator semi-annually, according to § 60.7(c).

[49 FR 43844, Oct. 31, 1984, as amended at 54 FR 6672, Feb. 14, 1989; 64 FR 10110, Mar. 2, 1999]

Subpart AAa—Standards of Performance for Steel Plants: Electric Arc Furnaces and Argon-Oxygen Decarburization Vessels Constructed After August 17, 1983

SOURCE: 49 FR 43845, Oct. 31, 1984, unless otherwise noted.

§ 60.270a Applicability and designation of affected facility.

(a) The provisions of this subpart are applicable to the following affected facilities in steel plants that produce carbon, alloy, or specialty steels: electric arc furnaces, argon-oxygen decarburization vessels, and dust-handling systems.

(b) The provisions of this subpart apply to each affected facility identified in paragraph (a) of this section that commences construction, modification, or reconstruction after August 17, 1983.

§ 60.271a Definitions.

As used in this subpart, all terms not defined herein shall have the meaning given them in the Act and in subpart A of this part.

Argon-oxygen decarburization vessel (AOD vessel) means any closed-bottom, refractory-lined converter vessel with submerged tuyeres through which gaseous mixtures containing argon and oxygen or nitrogen may be blown into molten steel for further refining.

Capture system means the equipment (including ducts, hoods, fans, dampers, etc.) used to capture or transport particulate matter generated by an electric arc furnace or AOD vessel to the air pollution control device.

Charge means the addition of iron and steel scrap or other materials into the top of an electric arc furnace or the addition of molten steel or other materials into the top of an AOD vessel.

Control device means the air pollution control equipment used to remove particulate matter from the effluent gas stream generated by an electric arc furnace or AOD vessel.

Direct-shell evacuation control system (DEC system) means a system that maintains a negative pressure within the electric arc furnace above the slag or metal and ducts emissions to the control device.

Dust-handling system means equipment used to handle particulate matter collected by the control device for an electric arc furnace or AOD vessel subject to this subpart. For the purposes of this subpart, the dust-handling system shall consist of the control device dust hoppers, the dust-conveying equipment, any central dust storage equipment, the dust-treating equipment (e.g., pug mill, pelletizer), dust transfer equipment (from storage to truck), and any secondary control devices used with the dust transfer equipment.

Electric arc furnace (EAF) means a furnace that produces molten steel and heats the charge materials with electric arcs from carbon electrodes. For the purposes of this subpart, an EAF shall consist of the furnace shell and roof and the transformer. Furnaces that continuously feed direct-reduced iron ore pellets as the primary source of iron are not affected facilities within the scope of this definition.

Heat cycle means the period beginning when scrap is charged to an empty EAF and ending when the EAF tap is completed or beginning when molten steel is charged to an empty AOD vessel and ending when the AOD vessel tap is completed.

Meltdown and refining period means the time period commencing at the termination of the initial charging period and ending at the initiation of the tapping period, excluding any intermediate charging periods and times when power to the EAF is off.

Melting means that phase of steel production cycle during which the iron and steel scrap is heated to the molten state.

Negative-pressure fabric filter means a fabric filter with the fans on the downstream side of the filter bags.

Positive-pressure fabric filter means a fabric filter with the fans on the upstream side of the filter bags.

Refining means that phase of the steel production cycle during which undesirable elements are removed from the molten steel and alloys are added to reach the final metal chemistry.

Shop means the building which houses one or more EAF's or AOD vessels.

Shop opacity means the arithmetic average of 24 observations of the opacity of emissions from the shop taken in accordance with Method 9 of appendix A of this part.

Tap means the pouring of molten steel from an EAF or AOD vessel.

Tapping period means the time period commencing at the moment an EAF begins to pour molten steel and ending either three minutes after steel ceases to flow from an EAF, or six minutes after steel begins to flow, whichever is longer.

[49 FR 43845, Oct. 31, 1984, as amended at 64 FR 10110, Mar. 2, 1999]

§ 60.272a Standard for particulate matter.

(a) On and after the date of which the performance test required to be conducted by § 60.8 is completed, no owner or operator subject to the provisions of this subpart shall cause to be discharged into the atmosphere from an EAF or an AOD vessel any gases which:

(1) Exit from a control device and contain particulate matter in excess of 12 mg/dscm (0.0052 gr/dscf);

(2) Exit from a control device and exhibit 3 percent opacity or greater; and

(3) Exit from a shop and, due solely to the operations of any affected EAF(s) or AOD vessel(s), exhibit 6 percent opacity or greater.

(b) On and after the date on which the performance test required to be conducted by § 60.8 is completed, no owner or operator subject to the provisions of this subpart shall cause to be discharged into the atmosphere from the dust-handling system any gases that exhibit 10 percent opacity or greater.

§ 60.273a Emission monitoring.

(a) Except as provided under paragraphs (b) and (c) of this section, a continuous monitoring system for the measurement of the opacity of emissions discharged into the atmosphere from the control device(s) shall be installed, calibrated, maintained, and operated by the owner or operator subject to the provisions of this subpart.

(b) No continuous monitoring system shall be required on any control device serving the dust-handling system.

(c) A continuous monitoring system for the measurement of opacity is not required on modular, multiple-stack, negative-pressure or positive-pressure fabric filters if observations of the opacity of the visible emissions from the control device are performed by a certified visible emission observer as follows: Visible emission observations are conducted at least once per day when the furnace is operating in the melting and refining period. These observations shall be taken in accordance with Method 9, and, for at least three 6-minute periods, the opacity shall be recorded for any point(s) where visible emissions are observed. Where it is possible to determine that a number of visible emission sites relate to only one incident of the visible emissions, only one set of three 6-minute observations will be required. In this case, Method 9 observations must be made for the site of highest opacity that directly relates to the cause (or location) of visible emissions observed during a single incident. Records shall be maintained of any 6-minute average that is in excess of the emission limit specified in § 60.272a(a) of this subpart.

(d) A furnace static pressure monitoring device is not required on any EAF equipped with a DEC system if observations of shop opacity are performed by a certified visible emission observer as follows: Shop opacity observations shall be conducted at least once per day when the furnace is operating in the meltdown and refining period. Shop opacity shall be determined as the arithmetic average of 24 consecutive 15-second opacity observations of emissions from the shop taken in accordance with Method 9. Shop opacity shall be recorded for any point(s) where visible emissions are observed. Where it is possible to determine that a number of visible emission sites relate to only one incident of visible emissions, only one observation of shop opacity will be required. In this case, the shop opacity observations must be made for the site of highest opacity that directly relates to the cause (or location)

of visible emissions observed during a single incident.

[49 FR 43845, Oct. 31, 1984, as amended at 54 FR 6672, Feb. 14, 1989; 64 FR 10111, Mar. 2, 1999]

§ 60.274a Monitoring of operations.

(a) The owner or operator subject to the provisions of this subpart shall maintain records of the following information:

(1) All data obtained under paragraph (b) of this section; and

(2) All monthly operational status inspections performed under paragraph (c) of this section.

(b) Except as provided under paragraph (d) of this section, the owner or operator subject to the provisions of this subpart shall check and record on a once-per-shift basis the furnace static pressure (if DEC system is in use, and a furnace static pressure gauge is installed according to paragraph (f) of this section) and either: check and record the control system fan motor amperes and damper position on a once-per-shift basis; install, calibrate, and maintain a monitoring device that continuously records the volumetric flow rate through each separately ducted hood; or install, calibrate, and maintain a monitoring device that continuously records the volumetric flow rate at the control device inlet and check and record damper positions on a once-per-shift basis. The monitoring device(s) may be installed in any appropriate location in the exhaust duct such that reproducible flow rate monitoring will result. The flow rate monitoring device(s) shall have an accuracy of ±10 percent over its normal operating range and shall be calibrated according to the manufacturer's instructions. The Administrator may require the owner or operator to demonstrate the accuracy of the monitoring device(s) relative to Methods 1 and 2 of appendix A of this part.

(c) When the owner or operator of an affected facility is required to demonstrate compliance with the standards under § 60.272a(a)(3) and at any other time the Administrator may require that (under section 114 of the Act, as amended) either: the control system fan motor amperes and all damper positions; the volumetric flow rate through each separately ducted hood; or the volumetric flow rate at the control device inlet and all damper positions shall be determined during all periods in which a hood is operated for the purpose of capturing emissions from the affected facility subject to paragraph (b)(1) or (b)(2) of this section. The owner or operator may petition the Administrator for reestablishment of these parameters whenever the owner or operator can demonstrate to the Administrator's satisfaction that the affected facility operating conditions upon which the parameters were previously established are no longer applicable. The values of these parameters as determined during the most recent demonstration of compliance shall be maintained at the appropriate level for each applicable period. Operation at other than baseline values may be subject to the requirements of § 60.276a(c).

(d) The owner or operator shall perform monthly operational status inspections of the equipment that is important to the performance of the total capture system (i.e., pressure sensors, dampers, and damper switches). This inspection shall include observations of the physical appearance of the equipment (e.g., presence of holes in ductwork or hoods, flow constrictions caused by dents or accumulated dust in ductwork, and fan erosion). Any deficiencies shall be noted and proper maintenance performed.

(e) The owner or operator may petition the Administrator to approve any alternative to monthly operational status inspections that will provide a continuous record of the operation of each emission capture system.

(f) Except as provided for under § 60.273a(d), if emissions during any phase of the heat time are controlled by the use of a DEC system, the owner or operator shall install, calibrate, and maintain a monitoring device that allows the pressure in the free space inside the EAF to be monitored. The monitoring device may be installed in any appropriate location in the EAF or DEC duct prior to the introduction of ambient air such that reproducible results will be obtained. The pressure monitoring device shall have an accuracy of ±5 mm of water gauge over its normal operating range and shall be

calibrated according to the manufacturer's instructions.

(g) Except as provided for under §60.273a(d), when the owner or operator of an EAF controlled by a DEC is required to demonstrate compliance with the standard under §60.272a(a)(3), and at any other time the Administrator may require (under section 114 of the Clean Air Act, as amended), the pressure in the free space inside the furnace shall be determined during the meltdown and refining period(s) using the monitoring device required under paragraph (f) of this section. The owner or operator may petition the Administrator for reestablishment of the pressure whenever the owner or operator can demonstrate to the Administrator's satisfaction that the EAF operating conditions upon which the pressures were previously established are no longer applicable. The pressure determined during the most recent demonstration of compliance shall be maintained at all times when the EAF is operating in a meltdown and refining period. Operation at higher pressures may be considered by the Administrator to be unacceptable operation and maintenance of the affected facility.

(h) During any performance test required under §60.8, and for any report thereof required by §60.275a(d) of this subpart, or to determine compliance with §60.272a(a)(3) of this subpart, the owner or operator shall monitor the following information for all heats covered by the test:

(1) Charge weights and materials, and tap weights and materials;

(2) Heat times, including start and stop times, and a log of process operation, including periods of no operation during testing and the pressure inside an EAF when direct-shell evacuation control systems are used;

(3) Control device operation log; and

(4) Continuous monitor or Reference Method 9 data.

[49 FR 43845, Oct. 31, 1984, as amended at 64 FR 10111, Mar. 2, 1999]

§60.275a Test methods and procedures.

(a) During performance tests required in §60.8, the owner or operator shall not add gaseous diluents to the effluent gas stream after the fabric in any pressurized fabric filter collector, unless the amount of dilution is separately determined and considered in the determination of emissions.

(b) When emissions from any EAF(s) or AOD vessel(s) are combined with emissions from facilities not subject to the provisions of this subpart but controlled by a common capture system and control device, the owner or operator shall use either or both of the following procedures during a performance test (see also §60.276a(e)):

(1) Determine compliance using the combined emissions.

(2) Use a method that is acceptable to the Administrator and that compensates for the emissions from the facilities not subject to the provisions of this subpart.

(c) When emission from any EAF(s) or AOD vessel(s) are combined with emissions from facilities not subject to the provisions of this subpart, the owner or operator shall demonstrate compliance with §60.272(a)(3) based on emissions from only the affected facility(ies).

(d) In conducting the performance tests required in §60.8, the owner or operator shall use as reference methods and procedures the test methods in appendix A of this part or other methods and procedures as specified in this section, except as provided in §60.8(b).

(e) The owner or operator shall determine compliance with the particulate matter standards in §60.272a as follows:

(1) Method 5 shall be used for negative-pressure fabric filters and other types of control devices and Method 5D shall be used for positive-pressure fabric filters to determine the particulate matter concentration and volumetric flow rate of the effluent gas. The sampling time and sample volume for each run shall be at least 4 hours and 4.50 dscm (160 dscf) and, when a single EAF or AOD vessel is sampled, the sampling time shall include an integral number of heats.

(2) When more than one control device serves the EAF(s) being tested, the concentration of particulate matter shall be determined using the following equation:

$$c_{st} = \left[\sum_{i=1}^{n}\left(c_{si}\,Q_{sdi}\right)\right]\sum_{i=1}^{n}Q_{sdi}$$

where:

c_{st}=average concentration of particulate matter, mg/dscm (gr/dscf).

c_{si}=concentration of particulate matter from control device ''i'', mg/dscm (gr/dscf).

n=total number of control devices tested.

Q_{sdi}=volumetric flow rate of stack gas from control device ''i'', dscm/hr (dscf/hr).

(3) Method 9 and the procedures of §60.11 shall be used to determine opacity.

(4) To demonstrate compliance with §60.272a(a) (1), (2), and (3), the test runs shall be conducted concurrently, unless inclement weather interferes.

(f) To comply with §60.274a (c), (f), (g), and (h), the owner or operator shall obtain the information required in these paragraphs during the particulate matter runs.

(g) Any control device subject to the provisions of the subpart shall be designed and constructed to allow measurement of emissions using applicable test methods and procedures.

(h) Where emissions from any EAF(s) or AOD vessel(s) are combined with emissions from facilities not subject to the provisions of this subpart but controlled by a common capture system and control device, the owner or operator may use any of the following procedures during a performance test:

(1) Base compliance on control of the combined emissions;

(2) Utilize a method acceptable to the Administrator that compensates for the emissions from the facilities not subject to the provisions of this subpart, or;

(3) Any combination of the criteria of paragraphs (h)(1) and (h)(2) of this section.

(i) Where emissions from any EAF(s) or AOD vessel(s) are combined with emissions from facilities not subject to the provisions of this subpart, determinations of compliance with §60.272a(a)(3) will only be based upon emissions originating from the affected facility(ies).

(j) Unless the presence of inclement weather makes concurrent testing infeasible, the owner or operator shall conduct concurrently the performance tests required under §60.8 to demonstrate compliance with §60.272a(a) (1), (2), and (3) of this subpart.

[49 FR 43845, Oct. 31, 1984, as amended at 54 FR 6673, Feb. 14, 1989; 54 FR 21344, May 17, 1989]

§60.276a Recordkeeping and reporting requirements.

(a) Records of the measurements required in §60.274a must be retained for at least 2 years following the date of the measurement.

(b) Each owner or operator shall submit a written report of exceedances of the control device opacity to the Administrator semi-annually. For the purposes of these reports, exceedances are defined as all 6-minute periods during which the average opacity is 3 percent or greater.

(c) Operation at a furnace static pressure that exceeds the value established under §60.274a(g) and either operation of control system fan motor amperes at values exceeding ±15 percent of the value established under §60.274a(c) or operation at flow rates lower than those established under §60.274a(c) may be considered by the Administrator to be unacceptable operation and maintenance of the affected facility. Operation at such values shall be reported to the Administrator semiannually.

(d) The requirements of this section remain in force until and unless EPA, in delegating enforcement authority to a State under section 111(c) of the Act, approves reporting requirements or an alternative means of compliance surveillance adopted by such State. In that event, affected sources within the State will be relieved of the obligation to comply with this section, provided that they comply with the requirements established by the State.

(e) When the owner or operator of an EAF or AOD is required to demonstrate compliance with the standard under §60.275 (b)(2) or a combination of (b)(1) and (b)(2) the owner or operator shall obtain approval from the Administrator of the procedure(s) that will be used to determine compliance. Notification of the procedure(s) to be used must be postmarked 30 days prior to the performance test.

(f) For the purpose of this subpart, the owner or operator shall conduct

the demonstration of compliance with §60.272a(a) of this subpart and furnish the Administrator a written report of the results of the test. This report shall include the following information:

(1) Facility name and address;

(2) Plant representative;

(3) Make and model of process, control device, and continuous monitoring equipment;

(4) Flow diagram of process and emission capture equipment including other equipment or process(es) ducted to the same control device;

(5) Rated (design) capacity of process equipment;

(6) Those data required under §60.274a(h) of this subpart;

(i) List of charge and tap weights and materials;

(ii) Heat times and process log;

(iii) Control device operation log; and

(iv) Continuous monitor or Reference Method 9 data.

(7) Test dates and test times;

(8) Test company;

(9) Test company representative;

(10) Test observers from outside agency;

(11) Description of test methodology used, including any deviation from standard reference methods;

(12) Schematic of sampling location;

(13) Number of sampling points;

(14) Description of sampling equipment;

(15) Listing of sampling equipment calibrations and procedures;

(16) Field and laboratory data sheets;

(17) Description of sample recovery procedures;

(18) Sampling equipment leak check results;

(19) Description of quality assurance procedures;

(20) Description of analytical procedures;

(21) Notation of sample blank corrections; and

(22) Sample emission calculations.

(g) The owner or operator shall maintain records of all shop opacity observations made in accordance with §60.273a(d). All shop opacity observations in excess of the emission limit specified in §60.272a(a)(3) of this subpart shall indicate a period of excess emission, and shall be reported to the administrator semi-annually, according to §60.7(c).

[49 FR 43845, Oct. 31, 1984, as amended at 54 FR 6673, Feb. 14, 1989; 64 FR 10111, Mar. 2, 1999]

Subpart BB—Standards of Performance for Kraft Pulp Mills

§60.280 Applicability and designation of affected facility.

(a) The provisions of this subpart are applicable to the following affected facilities in kraft pulp mills: Digester system, brown stock washer system, multiple-effect evaporator system, recovery furnace, smelt dissolving tank, lime kiln, and condensate stripper system. In pulp mills where kraft pulping is combined with neutral sulfite semichemical pulping, the provisions of this subpart are applicable when any portion of the material charged to an affected facility is produced by the kraft pulping operation.

(b) Except as noted in §60.283(a)(1)(iv), any facility under paragraph (a) of this section that commences construction or modification after September 24, 1976, is subject to the requirements of this subpart.

[51 FR 18544, May 20, 1986]

§60.281 Definitions.

As used in this subpart, all terms not defined herein shall have the same meaning given them in the Act and in subpart A.

(a) *Kraft pulp mill* means any stationary source which produces pulp from wood by cooking (digesting) wood chips in a water solution of sodium hydroxide and sodium sulfide (white liquor) at high temperature and pressure. Regeneration of the cooking chemicals through a recovery process is also considered part of the kraft pulp mill.

(b) *Neutral sulfite semichemical pulping operation* means any operation in which pulp is produced from wood by cooking (digesting) wood chips in a solution of sodium sulfite and sodium bicarbonate, followed by mechanical defibrating (grinding).

(c) *Total reduced sulfur (TRS)* means the sum of the sulfur compounds hydrogen sulfide, methyl mercaptan, dimethyl sulfide, and dimethyl disulfide,

that are released during the kraft pulping operation and measured by Reference Method 16.

(d) *Digester system* means each continuous digester or each batch digester used for the cooking of wood in white liquor, and associated flash tank(s), below tank(s), chip steamer(s), and condenser(s).

(e) *Brown stock washer system* means brown stock washers and associated knotters, vacuum pumps, and filtrate tanks used to wash the pulp following the digestion system. Diffusion washers are excluded from this definition.

(f) *Multiple-effect evaporator system* means the multiple-effect evaporators and associated condenser(s) and hotwell(s) used to concentrate the spent cooking liquid that is separated from the pulp (black liquor).

(g) *Black liquor oxidation system* means the vessels used to oxidize, with air or oxygen, the black liquor, and associated storage tank(s).

(h) *Recovery furnace* means either a straight kraft recovery furnace or a cross recovery furnace, and includes the direct-contact evaporator for a direct-contact furnace.

(i) *Straight kraft recovery furnace* means a furnace used to recover chemicals consisting primarily of sodium and sulfur compounds by burning black liquor which on a quarterly basis contains 7 weight percent or less of the total pulp solids from the neutral sulfite semichemical process or has green liquor sulfidity of 28 percent or less.

(j) *Cross recovery furnace* means a furnace used to recover chemicals consisting primarily of sodium and sulfur compounds by burning black liquor which on a quarterly basis contains more than 7 weight percent of the total pulp solids from the neutral sulfite semichemical process and has a green liquor sulfidity of more than 28 percent.

(k) *Black liquor solids* means the dry weight of the solids which enter the recovery furnace in the black liquor.

(l) *Green liquor sulfidity* means the sulfidity of the liquor which leaves the smelt dissolving tank.

(m) *Smelt dissolving tank* means a vessel used for dissolving the smelt collected from the recovery furnace.

(n) *Lime kiln* means a unit used to calcine lime mud, which consists primarily of calcium carbonate, into quicklime, which is calcium oxide.

(o) *Condensate stripper system* means a column, and associated condensers, used to strip, with air or steam, TRS compounds from condensate streams from various processes within a kraft pulp mill.

[43 FR 7572, Feb. 23, 1978, as amended at 51 FR 18544, May 20, 1986]

§ 60.282 Standard for particulate matter.

(a) On and after the date on which the performance test required to be conducted by § 60.8 is completed, no owner or operator subject to the provisions of this subpart shall cause to be discharged into the atmosphere:

(1) From any recovery furnace any gases which:

(i) Contain particulate matter in excess of 0.10 g/dscm (0.044 gr/dscf) corrected to 8 percent oxygen.

(ii) Exhibit 35 percent opacity or greater.

(2) From any smelt dissolving tank any gases which contain particulate matter in excess of 0.1 g/kg black liquor solids (dry weight)[0.2 lb/ton black liquor solids (dry weight)].

(3) From any lime kiln any gases which contain particulate matter in excess of:

(i) 0.15 g/dscm (0.067 gr/dscf) corrected to 10 percent oxygen, when gaseous fossil fuel is burned.

(ii) 0.30 g/dscm (0.13 gr/dscf) corrected to 10 percent oxygen, when liquid fossil fuel is burned.

[43 FR 7572, Feb. 23, 1978]

§ 60.283 Standard for total reduced sulfur (TRS).

(a) On and after the date on which the performance test required to be conducted by § 60.8 is completed, no owner or operator subject to the provisions of this subpart shall cause to be discharged into the atmosphere:

(1) From any digester system, brown stock washer system, multiple-effect evaporator system, or condensate stripper system any gases which contain TRS in excess of 5 ppm by volume on a dry basis, corrected to 10 percent

oxygen, unless the following conditions are met:

(i) The gases are combusted in a lime kiln subject to the provisions of paragraph (a)(5) of this section; or

(ii) The gases are combusted in a recovery furnace subject to the provisions of paragraphs (a)(2) or (a)(3) of this section; or

(iii) The gases are combusted with other waste gases in an incinerator or other device, or combusted in a lime kiln or recovery furnace not subject to the provisions of this subpart, and are subjected to a minimum temperature of 1200 °F. for at least 0.5 second; or

(iv) It has been demonstrated to the Administrator's satisfaction by the owner or operator that incinerating the exhaust gases from a new, modified, or reconstructed brown stock washer system is technologically or economically unfeasible. Any exempt system will become subject to the provisions of this subpart if the facility is changed so that the gases can be incinerated.

(v) The gases from the digester system, brown stock washer system, or condensate stripper system are controlled by a means other than combustion. In this case, this system shall not discharge any gases to the atmosphere which contain TRS in excess of 5 ppm by volume on a dry basis, corrected to the actual oxygen content of the untreated gas stream.

(vi) The uncontrolled exhaust gases from a new, modified, or reconstructed digester system contain TRS less than 0.005 g/kg ADP (0.01 lb/ton ADP).

(2) From any straight kraft recovery furnace any gases which contain TRS in excess of 5 ppm by volume on a dry basis, corrected to 8 percent oxygen.

(3) From any cross recovery furnace any gases which contain TRS in excess of 25 ppm by volume on a dry basis, corrected to 8 percent oxygen.

(4) From any smelt dissolving tank any gases which contain TRS in excess of 0.016 g/kg black liquor solids as H_2S (0.033 lb/ton black liquor solids as H_2S).

(5) From any lime kiln any gases which contain TRS in excess of 8 ppm by volume on a dry basis, corrected to 10 percent oxygen.

[43 FR 7572, Feb. 23, 1978, as amended at 50 FR 6317, Feb. 14, 1985; 51 FR 18544, May 20, 1986]

§ 60.284 Monitoring of emissions and operations.

(a) Any owner or operator subject to the provisions of this subpart shall install, calibrate, maintain, and operate the following continuous monitoring systems:

(1) A continuous monitoring system to monitor and record the opacity of the gases discharged into the atmosphere from any recovery furnace. The span of this system shall be set at 70 percent opacity.

(2) Continuous monitoring systems to monitor and record the concentration of TRS emissions on a dry basis and the percent of oxygen by volume on a dry basis in the gases discharged into the atmosphere from any lime kiln, recovery furnace, digester system, brown stock washer system, multiple-effect evaporator system, or condensate stripper system, except where the provisions of § 60.283(a)(1) (iii) or (iv) apply. These systems shall be located downstream of the control device(s) and the spans of these continuous monitoring system(s) shall be set:

(i) At a TRS concentration of 30 ppm for the TRS continuous monitoring system, except that for any cross recovery furnace the span shall be set at 50 ppm.

(ii) At 20 percent oxygen for the continuous oxygen monitoring system.

(b) Any owner or operator subject to the provisions of this subpart shall install, calibrate, maintain, and operate the following continuous monitoring devices:

(1) For any incinerator, a monitoring device which measures and records the combustion temperature at the point of incineration of effluent gases which are emitted from any digester system, brown stock washer system, multiple-effect evaporator system, black liquor oxidation system, or condensate stripper system where the provisions of § 60.283(a)(1)(iii) apply. The monitoring

device is to be certified by the manufacturer to be accurate within ±1 percent of the temperature being measured.

(2) For any lime kiln or smelt dissolving tank using a scrubber emission control device:

(i) A monitoring device for the continuous measurement of the pressure loss of the gas stream through the control equipment. The monitoring device is to be certified by the manufacturer to be accurate to within a gage pressure of ±500 pascals (ca. ±2 inches water gage pressure).

(ii) A monitoring device for the continuous measurement of the scrubbing liquid supply pressure to the control equipment. The monitoring device is to be certified by the manufacturer to be accurate within ±15 percent of design scrubbing liquid supply pressure. The pressure sensor or tap is to be located close to the scrubber liquid discharge point. The Administrator may be consulted for approval of alternative locations.

(c) Any owner or operator subject to the provisions of this subpart shall, except where the provisions of §60.283 (a)(1)(iv) or (a)(4) apply.

(1) Calculate and record on a daily basis 12-hour average TRS concentrations for the two consecutive periods of each operating day. Each 12-hour average shall be determined as the arithmetic mean of the appropriate 12 contiguous 1-hour average total reduced sulfur concentrations provided by each continuous monitoring system installed under paragraph (a)(2) of this section.

(2) Calculate and record on a daily basis 12-hour average oxygen concentrations for the two consecutive periods of each operating day for the recovery furnace and lime kiln. These 12-hour averages shall correspond to the 12-hour average TRS concentrations under paragraph (c)(1) of this section and shall be determined as an arithmetic mean of the appropriate 12 contiguous 1-hour average oxygen concentrations provided by each continuous monitoring system installed under paragraph (a)(2) of this section.

(3) Correct all 12-hour average TRS concentrations to 10 volume percent oxygen, except that all 12-hour average TRS concentration from a recovery furnace shall be corrected to 8 volume percent using the following equation:

$$C_{corr} = C_{meas} \times (21 - X / 21 - Y)$$

where:

C_{corr} = the concentration corrected for oxygen.

C_{meas} = the concentration uncorrected for oxygen.

X = the volumetric oxygen concentration in percentage to be corrected to (8 percent for recovery furnaces and 10 percent for lime kilns, incinerators, or other devices).

Y = the measured 12-hour average volumetric oxygen concentration.

(4) Record once per shift measurements obtained from the continuous monitoring devices installed under paragraph (b)(2) of this section.

(d) For the purpose of reports required under §60.7(c), any owner or operator subject to the provisions of this subpart shall report semiannually periods of excess emissions as follows:

(1) For emissions from any recovery furnace periods of excess emissions are:

(i) All 12-hour averages of TRS concentrations above 5 ppm by volume for straight kraft recovery furnaces and above 25 ppm by volume for cross recovery furnaces.

(ii) All 6-minute average opacities that exceed 35 percent.

(2) For emissions from any lime kiln, periods of excess emissions are all 12-hour average TRS concentration above 8 ppm by volume.

(3) For emissions from any digester system, brown stock washer system, multiple-effect evaporator system, or condensate stripper system periods of excess emissions are:

(i) All 12-hour average TRS concentrations above 5 ppm by volume unless the provisions of §60.283(a)(1) (i), (ii), or (iv) apply; or

(ii) All periods in excess of 5 minutes and their duration during which the combustion temperature at the point of incineration is less than 1200 °F, where the provisions of §60.283(a)(1)(iii) apply.

(e) The Administrator will not consider periods of excess emissions reported under paragraph (d) of this section to be indicative of a violation of §60.11(d) provided that:

(1) The percent of the total number of possible contiguous periods of excess

emissions in a quarter (excluding periods of startup, shutdown, or malfunction and periods when the facility is not operating) during which excess emissions occur does not exceed:

(i) One percent for TRS emissions from recovery furnaces.

(ii) Six percent for average opacities from recovery furnaces.

(2) The Administrator determines that the affected facility, including air pollution control equipment, is maintained and operated in a manner which is consistent with good air pollution control practice for minimizing emissions during periods of excess emissions.

[43 FR 7572, Feb. 23, 1978, as amended at 51 FR 18545, May 20, 1986]

§ 60.285 Test methods and procedures.

(a) In conducting the performance tests required in § 60.8, the owner or operator shall use as reference methods and procedures the test methods in appendix A of this part or other methods and procedures in this section, except as provided in § 60.8(b). Acceptable alternative methods and procedures are given in paragraph (f) of this section.

(b) The owner or operator shall determine compliance with the particulate matter standards in § 60.282(a) (1) and (3) as follows:

(1) Method 5 shall be used to determine the particulate matter concentration. The sampling time and sample volume for each run shall be at least 60 minutes and 0.90 dscm (31.8 dscf). Water shall be used as the cleanup solvent instead of acetone in the sample recovery procedure. The particulate concentration shall be corrected to the appropriate oxygen concentration according to § 60.284(c)(3).

(2) The emission rate correction factor, integrated sampling and analysis procedure of Method 3B shall be used to determine the oxygen concentration. The gas sample shall be taken at the same time and at the same traverse points as the particulate sample.

(3) Method 9 and the procedures in § 60.11 shall be used to determine opacity.

(c) The owner or operator shall determine compliance with the particular matter standard in § 60.282(a)(2) as follows:

(1) The emission rate (E) of particulate matter shall be computed for each run using the following equation:

$E = c_s Q_{sd}/BLS$

where:

E=emission rate of particulate matter, g/kg (lb/ton) of BLS.

c_s=concentration of particulate matter, g/dsm (lb/dscf).

Q_{sd}=volumetric flow rate of effluent gas, dscm/hr (dscf/hr).

BLS=black liquor solids (dry weight) feed rate, kg/hr (ton/hr).

(2) Method 5 shall be used to determine the particulate matter concentration (c_s) and the volumetric flow rate (Q_{sd}) of the effluent gas. The sampling time and sample volume shall be at least 60 minutes and 0.90 dscm (31.8 dscf). Water shall be used instead of acetone in the sample recovery.

(3) Process data shall be used to determine the black liquor solids (BLS) feed rate on a dry weight basis.

(d) The owner or operator shall determine compliance with the TRS standards in § 60.283, except § 60.283(a)(1)(vi) and (4), as follows:

(1) Method 16 shall be used to determine the TRS concentration. The TRS concentration shall be corrected to the appropriate oxygen concentration using the procedure in § 60.284(c)(3). The sampling time shall be at least 3 hours, but no longer than 6 hours.

(2) The emission rate correction factor, integrated sampling and analysis procedure of Method 3B shall be used to determine the oxygen concentration. The sample shall be taken over the same time period as the TRS samples.

(3) When determining whether a furnace is a straight kraft recovery furnace or a cross recovery furnace, TAPPI Method T.624 (incorporated by reference—see § 60.17) shall be used to determine sodium sulfide, sodium hydroxide, and sodium carbonate. These determinations shall be made 3 times daily from the green liquor, and the daily average values shall be converted to sodium oxide (Na_20) and substituted into the following equation to determine the green liquor sulfidity:

$GLS = 100\ C_{Na2S}/(C_{NA2S}+C_{Na2H}+C_{Na2CO3})$

Where:

GLS=green liquor sulfidity, percent.

C_{Na2S}=concentration of Na_2S as Na_2O, mg/liter (gr/gal).

C_{NaOH}=concentration of NaOH as Na_2O, mg/liter (gr/gal).

C_{Na2CO3}=concentration of Na_2CO_3 as Na_2O, mg/liter (gr/gal).

(e) The owner or operator shall determine compliance with the TRS standards in §60.283(a)(1)(vi) and (4) as follows:

(1) The emission rate (E) of TRS shall be computed for each run using the following equation:

$E=C_{TRS}\ F\ Q_{sd}/P$

where:

E=emission rate of TRS, g/kg (lb/ton) of BLS or ADP.

C_{TRS}=average combined concentration of TRS, ppm.

F=conversion factor, 0.001417 g H_2S/m^3 ppm (0.08844×10^{-6} lb H_2S/ft^3 ppm).

Q_{sd}=volumetric flow rate of stack gas, dscm/hr (dscf/hr).

P=black liquor solids feed or pulp production rate, kg/hr (ton/hr).

(2) Method 16 shall be used to determine the TRS concentration (C_{TRS}).

(3) Method 2 shall be used to determine the volumetric flow rate (Q_{sd}) of the effluent gas.

(4) Process data shall be used to determine the black liquor feed rate or the pulp production rate (P).

(f) The owner or operator may use the following as alternatives to the reference methods and procedures specified in this section:

(1) For Method 5, Method 17 may be used if a constant value of 0.009 g/dscm (0.004 gr/dscf) is added to the results of Method 17 and the stack temperature is no greater than 205 °C (400 °F).

(2) For Method 16, Method 16A or 16B may be used if the sampling time is 60 minutes.

[54 FR 6673, Feb. 14, 1989; 54 FR 21344, May 17, 1989, as amended at 55 FR 5212, Feb. 14, 1990]

Subpart CC—Standards of Performance for Glass Manufacturing Plants

§ 60.290 Applicability and designation of affected facility.

(a) Each glass melting furnace is an affected facility to which the provisions of this subpart apply.

(b) Any facility under paragraph (a) of this section that commences construction or modification after June 15, 1979, is subject to the requirements of this subpart.

(c) This subpart does not apply to hand glass melting furnaces, glass melting furnaces designed to produce less than 4,550 kilograms of glass per day and all-electric melters.

[45 FR 66751, Oct. 7, 1980]

§ 60.291 Definitions.

As used in this subpart, all terms not defined herein shall have the meaning given them in the Act and in subpart A of this part, unless otherwise required by the context.

All-electric melter means a glass melting furnace in which all the heat required for melting is provided by electric current from electrodes submerged in the molten glass, although some fossil fuel may be charged to the furnace as raw material only.

Borosilicate recipe means glass product composition of the following approximate ranges of weight proportions: 60 to 80 percent silicon dioxide, 4 to 10 percent total R_2O (e.g., Na_2O and K_2O), 5 to 35 percent boric oxides, and 0 to 13 percent other oxides.

Container glass means glass made of soda-lime recipe, clear or colored, which is pressed and/or blown into bottles, jars, ampoules, and other products listed in Standard Industrial Classification 3221 (SIC 3221).

Experimental furnace means a glass melting furnace with the sole purpose of operating to evaluate glass melting processes, technologies, or glass products. An experimental furnace does not produce glass that is sold (except for further research and development purposes) or that is used as a raw material for nonexperimental furnaces.

Flat glass means glass made of soda-lime recipe and produced into continuous flat sheets and other products listed in SIC 3211.

Flow channels means appendages used for conditioning and distributing molten glass to forming apparatuses and are a permanently separate source of emissions such that no mixing of emissions occurs with emissions from the melter cooling system prior to their being vented to the atmosphere.

Glass melting furnace means a unit comprising a refractory vessel in which raw materials are charged, melted at

high temperature, refined, and conditioned to produce molten glass. The unit includes foundations, superstructure and retaining walls, raw material charger systems, heat exchangers, melter cooling system, exhaust system, refractory brick work, fuel supply and electrical boosting equipment, integral control systems and instrumentation, and appendaees for conditioning and distributing molten glass to forming apparatuses. The forming apparatuses, including the float bath used in flat glass manufacturing and flow channels in wool fiberglass and textile fiberglass manufacturing, are not considered part of the glass melting furnace.

Glass produced means the weight of the glass pulled from the glass melting furnace.

Hand glass melting furnace means a glass melting furnace where the molten glass is removed from the furnace by a glassworker using a blowpipe or a pontil.

Lead recipe means glass product composition of the following ranges of weight proportions: 50 to 60 percent silicon dioxide, 18 to 35 percent lead oxides, 5 to 20 percent total R_2O (e.g., Na_2M and K_2O), 0 to 8 percent total R_2O_3 (e.g., Al_2O_3), 0 to 15 percent total RO (e.g., CaO, MgO), other than lead oxide, and 5 to 10 percent other oxides.

Pressed and blown glass means glass which is pressed, blown, or both, including textile fiberglass, noncontinuous flat glass, noncontainer glass, and other products listed in SIC 3229. It is separated into:

(1) Glass of borosilicate recipe.

(2) Glass of soda-lime and lead recipes.

(3) Glass of opal, fluoride, and other recipes.

Rebricking means cold replacement of damaged or worn refractory parts of the glass melting furnace. Rebricking includes replacement of the refractories comprising the bottom, sidewalls, or roof of the melting vessel; replacement of refractory work in the heat exchanger; replacment of refractory portions of the glass conditioning and distribution system.

Soda-lime recipe means glass product composition of the following ranges of weight proportions: 60 to 75 percent silicon dioxide, 10 to 17 percent total R_2O (e.g., Na_2O and K_2O), 8 to 20 percent total RO but not to include any PbO (e.g., CaO, and MgO), 0 to 8 percent total R_2O_3 (e.g., Al_2O_3), and 1 to 5 percent other oxides.

Textile fiberglass means fibrous glass in the form of continuous strands having uniform thickness.

With modified-processes means using any technique designed to minimize emissions without the use of add-on pollution controls.

Wool fiberglass means fibrous glass of random texture, including fiberglass insulation, and other products listed in SIC 3296.

[45 FR 66751, Oct. 7, 1980, as amended at 49 FR 41035, Oct. 19, 1984]

§ 60.292 Standards for particulate matter.

(a) On and after the date on which the performance test required to be conducted by § 60.8 is completed, no owner or operator of a glass melting furnace subject to the provisions of this subpart shall cause to be discharged into the atmosphere—

(1) From any glass melting furnace fired exclusively with either a gaseous fuel or a liquid fuel, particulate matter at emission rates exceeding those specified in Table CC–1, Column 2 and Column 3, respectively, or

(2) From any glass melting furnace, fired simultaneously with gaseous and liquid fuels, particulate matter at emission rates exceeding STD as specified by the following equation:

$$STD=X\ [1.3(Y)+(Z)]$$

Where:

STD=Particulate matter emission limit, g of particulate/kg of glass produced.

X=Emission rate specified in Table CC–1 for furnaces fired with gaseous fuel (Column 2).

Y=Decimal fraction of liquid fuel heating value to total (gaseous and liquid) fuel heating value fired in the glass melting furnaces as determined in § 60.296(b). (joules/joules).

Z=(1–Y).

(b) Conversion of a glass melting furnace to the use of liquid fuel is not considered a modification for the purposes of § 60.14.

(c) Rebricking and the cost of rebricking is not considered a reconstruction for the purposes of § 60.15.

(d) An owner or operator of an experimental furnace is not subject to the requirements of this section.

(e) During routine maintenance of add-on pollution controls, an owner or operator of a glass melting furnace subject to the provisions of paragraph (a) of this section is exempt from the provisions of paragraph (a) of this section if:

(1) Routine maintenance in each calendar year does not exceed 6 days;

(2) Routine maintenance is conducted in a manner consistent with good air pollution control practices for minimizing emissions; and

(3) A report is submitted to the Administrator 10 days before the start of the routine maintenance (if 10 days cannot be provided, the report must be submitted as soon as practicable) and the report contains an explanation of the schedule of the maintenance.

TABLE CC–1—*Emission Rates*

[g of particulate/kg of glass produced]

Col. 1—Glass manufacturing plant industry segment	Col. 2—Furnace fired with gaseous fuel	Col. 3—Furnace fired with liquid fuel
Container glass	0.1	0.13
Pressed and blown glass		
(a) Borosilicate Recipes	0.5	0.65
(b) Soda-Lime and Lead Recipes	0.1	0.13
(c) Other-Than Borosilicate, Soda-Lime, and Lead Recipes (including opal, fluoride, and other recipes)	0.25	0.325
Wool fiberglass	0.25	0.325
Flat glass	0.225	0.225

[45 FR 66751, Oct. 7, 1980, as amended at 49 FR 41035, Oct. 19, 1984; 54 FR 6674, Feb. 14, 1989]

§ 60.293 Standards for particulate matter from glass melting furnace with modified-processes.

(a) An owner or operator of a glass melting furnaces with modified-processes is not subject to the provisions of § 60.292 if the affected facility complies with the provisions of this section.

(b) On and after the date on which the performance test required to be conducted by § 60.8 is completed, no owner or operator of a glass melting furnace with modified-processes subject to the provisions of this subpart shall cause to be discharged into the atmosphere from the affected facility:

(1) Particulate matter at emission rates exceeding 0.5 gram of particulate per kilogram of glass produced (g/kg) as measured according to paragraph (e) of this section for container glass, flat glass, and pressed and blown glass with a soda-lime recipe melting furnaces.

(2) Particulate matter at emission rates exceeding 1.0 g/kg as measured according to paragraph (e) of this section for pressed and blown glass with a borosilicate recipe melting furnace.

(3) Particulate matter at emission rates exceeding 0.5 g/kg as measured according to paragraph (e) of this section for textile fiberglass and wool fiberglass melting furnaces.

(c) The owner or operator of an affected facility that is subject to emission limits specified under paragraph (b) of this section shall:

(1) Install, calibrate, maintain, and operate a continuous monitoring system for the measurement of the opacity of emissions discharged into the atmosphere from the affected facility.

(2) During the performance test required to be conducted by § 60.8, conduct continuous opacity monitoring during each test run.

(3) Calculate 6-minute opacity averages from 24 or more data points equally spaced over each 6-minute period during the test runs.

(4) Determine, based on the 6-minute opacity averages, the opacity value corresponding to the 99 percent upper confidence level of a normal distribution of average opacity values.

(5) For the purposes of § 60.7, report to the Administrator as excess emissions all of the 6-minute periods during which the average opacity, as measured by the continuous monitoring system installed under paragraph (c)(1) of this section, exceeds the opacity value corresponding to the 99 percent upper confidence level determined under paragraph (c)(4) of this section.

(d)(1) After receipt and consideration of written application, the Administrator may approve alternative continuous monitoring systems for the measurement of one or more process or operating parameters that is or are demonstrated to enable accurate and representative monitoring of an emission limit specified in paragraph (b)(1) of this section.

(2) After the Administrator approves an alternative continuous monitoring system for an affected facility, the requirements of paragraphs (c) (1) through (5) of this section will not apply for that affected facility.

(3) An owner or operator may redetermine the opacity value corresponding to the 99 percent upper confidence level as described in paragraph (c)(4) of this section if the owner or operator:

(i) Conducts continuous opacity monitoring during each test run of a performance test that demonstrates compliance with an emission limit of paragraph (b) of this section,

(ii) Recalculates the 6-minute opacity averages as described in paragraph (c)(3) of this section, and

(iii) Uses the redetermined opacity value corresponding to the 99 percent upper confidence level for the purposes of paragraph (c)(5) of this section.

(e) Test methods and procedures as specified in § 60.296 shall be used to determine compliance with this section except that to determine compliance for any glass melting furnace using modified processes and fired with either a gaseous fuel or a liquid fuel containing less than 0.50 weight percent sulfur, Method 5 shall be used with the probe and filter holder heating system in the sampling train set to provide a gas temperature of 120±14 °C.

[49 FR 41036, Oct. 19, 1984, as amended at 64 FR 7466, Feb. 12, 1999]

§§ 60.294–60.295 [Reserved]

§ 60.296 Test methods and procedures.

(a) If a glass melting furnace with modified processes is changed to one without modified processes or if a glass melting furnace without modified processes is changed to one with modified processes, the owner or operator shall notify the Administrator at least 60 days before the change is scheduled to occur.

(b) When gaseous and liquid fuels are fired simultaneously in a glass melting furnace, the owner or operator shall determine the applicable standard under § 60.292(a)(2) as follows:

(1) The ratio (Y) of liquid fuel heating value to total (gaseous and liquid) fuel heating value fired in the glass melting furnaces shall be computed for each run using the following equation:

$Y=(H_l\ L)/(H_l\ L+H_g\ G)$

where:

Y=decimal fraction of liquid fuel heating value to total fuel heating value.

H_l=gross calorific value of liquid fuel, J/kg.

H_g=gross calorific value of gaseous fuel, J/kg.

L=liquid flow rate, kg/hr.

G=gaseous flow rate, kg/hr.

(2) Suitable methods shall be used to determine the rates (L and G) of fuels burned during each test period and a material balance over the glass melting furnace shall be used to confirm the rates.

(3) American Society of Testing and Materials (ASTM) Method D 240–76 (liquid fuels) and D 1826–77 (gaseous fuels) (incorporated by reference—see § 60.17), as applicable, shall be used to determine the gross calorific values.

(c) In conducting the performance tests required in § 60.8, the owner or operator shall use as reference methods and procedures the test methods in appendix A of this part or other methods and procedures as specified in this section, except as provided in § 60.8(b).

(d) The owner or operator shall determine compliance with the particulate matter standards in §§ 60.292 and 60.293 as follows:

(1) The emission rate (E) of particulate matter shall be computed for each run using the following equation:

$E=(c_s\ Q_{sd}-A)/P$

where:

E=emission rate of particulate matter, g/kg.

c_s=concentration of particulate matter, g/dsm.

Q_{sd}=volumetric flow rate, dscm/hr.

A=zero production rate correction

=227 g/hr for container glass, pressed and blown (soda-lime and lead) glass, and pressed and blown (other than borosilicate, soda-lime, and lead) glass.

=454 g/hr for pressed and blown (borosilicate) glass, wool fiberglass, and flat glass.

P=glass production rate, kg/hr.

(2) Method 5 shall be used to determine the particulate matter concentration (c_s) and volumetric flow rate (Q_{sd}) of the effluent gas. The sampling time and sample volume for each run shall be at least 60 minutes and 0.90 dscm (31.8 dscf). The probe and filter holder heating system may be set to provide a gas temperature no greater than 177±14 °C (350±25 °F), except under the conditions specified in § 60.293(e).

(3) Direct measurement or material balance using good engineering practice shall be used to determine the amount of glass pulled during the performance test. The rate of glass produced is defined as the weight of glass pulled from the affected facility during the performance test divided by the number of hours taken to perform the performance test.

(4) Method 9 and the procedures in § 60.11 shall be used to determine opacity.

[54 FR 6674, Feb. 14, 1989; 54 FR 21344, May 17, 1989]

Subpart DD—Standards of Performance for Grain Elevators

SOURCE: 43 FR 34347, Aug. 3, 1978, unless otherwise noted.

§ 60.300 Applicability and designation of affected facility.

(a) The provisions of this subpart apply to each affected facility at any grain terminal elevator or any grain storage elevator, except as provided under § 60.304(b). The affected facilities are each truck unloading station, truck loading station, barge and ship unloading station, barge and ship loading station, railcar loading station, railcar unloading station, grain dryer, and all grain handling operations.

(b) Any facility under paragraph (a) of this section which commences construction, modification, or reconstruction after August 3, 1978, is subject to the requirements of this part.

[43 FR 34347, Aug. 3, 1978, as amended at 52 FR 42434, Nov. 5, 1988]

§ 60.301 Definitions.

As used in this subpart, all terms not defined herein shall have the meaning given them in the act and in subpart A of this part.

(a) *Grain* means corn, wheat, sorghum, rice, rye, oats, barley, and soybeans.

(b) *Grain elevator* means any plant or installation at which grain is unloaded, handled, cleaned, dried, stored, or loaded.

(c) *Grain terminal elevator* means any grain elevator which has a permanent storage capacity of more than 88,100 m^3 (ca. 2.5 million U.S. bushels), except those located at animal food manufacturers, pet food manufacturers, cereal manufacturers, breweries, and livestock feedlots.

(d) *Permanent storage capacity* means grain storage capacity which is inside a building, bin, or silo.

(e) *Railcar* means railroad hopper car or boxcar.

(f) *Grain storage elevator* means any grain elevator located at any wheat flour mill, wet corn mill, dry corn mill (human consumption), rice mill, or soybean oil extraction plant which has a permanent grain storage capacity of 35,200 m^3 (ca. 1 million bushels).

(g) *Process emission* means the particulate matter which is collected by a capture system.

(h) *Fugitive emission* means the particulate matter which is not collected by a capture system and is released directly into the atmosphere from an affected facility at a grain elevator.

(i) *Capture system* means the equipment such as sheds, hoods, ducts, fans, dampers, etc. used to collect particulate matter generated by an affected facility at a grain elevator.

(j) *Grain unloading station* means that portion of a grain elevator where the grain is transferred from a truck, railcar, barge, or ship to a receiving hopper.

(k) *Grain loading station* means that portion of a grain elevator where the grain is transferred from the elevator to a truck, railcar, barge, or ship.

(l) *Grain handling operations* include bucket elevators or legs (excluding legs used to unload barges or ships), scale hoppers and surge bins (garners), turn heads, scalpers, cleaners, trippers, and the headhouse and other such structures.

(m) *Column dryer* means any equipment used to reduce the moisture content of grain in which the grain flows from the top to the bottom in one or more continuous packed columns between two perforated metal sheets.

(n) *Rack dryer* means any equipment used to reduce the moisture content of grain in which the grain flows from the top to the bottom in a cascading flow around rows of baffles (racks).

(o) *Unloading leg* means a device which includes a bucket-type elevator

which is used to remove grain from a barge or ship.

§ 60.302 Standard for particulate matter.

(a) On and after the 60th day of achieving the maximum production rate at which the affected facility will be operated, but no later than 180 days after initial startup, no owner or operator subject to the provisions of this subpart shall cause to be discharged into the atmosphere any gases which exhibit greater than 0 percent opacity from any:

(1) Column dryer with column plate perforation exceeding 2.4 mm diameter (ca. 0.094 inch).

(2) Rack dryer in which exhaust gases pass through a screen filter coarser than 50 mesh.

(b) On and after the date on which the performance test required to be conducted by §60.8 is completed, no owner or operator subject to the provisions of this subpart shall cause to be discharged into the atmosphere from any affected facility except a grain dryer any process emission which:

(1) Contains particulate matter in excess of 0.023 g/dscm (ca. 0.01 gr/dscf).

(2) Exhibits greater than 0 percent opacity.

(c) On and after the 60th day of achieving the maximum production rate at which the affected facility will be operated, but no later than 180 days after initial startup, no owner or operator subject to the provisions of this subpart shall cause to be discharged into the atmosphere any fugitive emission from:

(1) Any individual truck unloading station, railcar unloading station, or railcar loading station, which exhibits greater than 5 percent opacity.

(2) Any grain handling operation which exhibits greater than 0 percent opacity.

(3) Any truck loading station which exhibits greater than 10 percent opacity.

(4) Any barge or ship loading station which exhibits greater than 20 percent opacity.

(d) The owner or operator of any barge or ship unloading station shall operate as follows:

(1) The unloading leg shall be enclosed from the top (including the receiving hopper) to the center line of the bottom pulley and ventilation to a control device shall be maintained on both sides of the leg and the grain receiving hopper.

(2) The total rate of air ventilated shall be at least 32.1 actual cubic meters per cubic meter of grain handling capacity (ca. 40 ft^3/bu).

(3) Rather than meet the requirements of paragraphs (d)(1) and (2) of this section the owner or operator may use other methods of emission control if it is demonstrated to the Administrator's satisfaction that they would reduce emissions of particulate matter to the same level or less.

§ 60.303 Test methods and procedures.

(a) In conducting the performance tests required in §60.8, the owner or operator shall use as reference methods and procedures the test methods in appendix A of this part or other methods and procedures as specified in this section, except as provided in §60.8(b). Acceptable alternative methods and procedures are given in paragraph (c) of this section.

(b) The owner or operator shall determine compliance with the particulate matter standards in §60.302 as follows:

(1) Method 5 shall be used to determine the particulate matter concentration and the volumetric flow rate of the effluent gas. The sampling time and sample volume for each run shall be at least 60 minutes and 1.70 dscm (60 dscf). The probe and filter holder shall be operated without heaters.

(2) Method 2 shall be used to determine the ventilation volumetric flow rate.

(3) Method 9 and the procedures in §60.11 shall be used to determine opacity.

(c) The owner or operator may use the following as alternatives to the reference methods and procedures specified in this section:

(1) For Method 5, Method 17 may be used.

[54 FR 6674, Feb. 14, 1989]

§ 60.304 Modifications.

(a) The factor 6.5 shall be used in place of ''annual asset guidelines repair

allowance percentage,'' to determine whether a capital expenditure as defined by §60.2 has been made to an existing facility.

(b) The following physical changes or changes in the method of operation shall not by themselves be considered a modification of any existing facility:

(1) The addition of gravity loadout spouts to existing grain storage or grain transfer bins.

(2) The installation of automatic grain weighing scales.

(3) Replacement of motor and drive units driving existing grain handling equipment.

(4) The installation of permanent storage capacity with no increase in hourly grain handling capacity.

Subpart EE—Standards of Performance for Surface Coating of Metal Furniture

SOURCE: 47 FR 49287, Oct. 29, 1982, unless otherwise noted.

§ 60.310 Applicability and designation of affected facility.

(a) The affected facility to which the provisions of this subpart apply is each metal furniture surface coating operation in which organic coatings are applied.

(b) This subpart applies to each affected facility identified in paragraph (a) of this section on which construction, modification, or reconstruction is commenced after November 28, 1980.

(c) Any owner or operator of a metal furniture surface coating operation that uses less than 3,842 liters of coating (as applied) per year and keeps purchase or inventory records or other data necessary to substantiate annual coating usage shall be exempt from all other provisions of this subpart. These records shall be maintained at the source for a period of at least 2 years.

[47 FR 49287, Oct. 29, 1982, as amended at 50 FR 18248, Apr. 30, 1985]

§ 60.311 Definitions and symbols.

(a) All terms used in this subpart not defined below are given the meaning in the Act and in subpart A of this part.

Bake oven means a device which uses heat to dry or cure coatings.

Dip coating means a method of applying coatings in which the part is submerged in a tank filled with the coatings.

Electrodeposition (EDP) means a method of applying coatings in which the part is submerged in a tank filled with the coatings and in which an electrical potential is used to enhance deposition of the coatings on the part.

Electrostatic spray application means a spray application method that uses an electrical potential to increase the transfer efficiency of the coatings.

Flash-off area means the portion of a surface coating operation between the coating application area and bake oven.

Flow coating means a method of applying coatings in which the part is carried through a chamber containing numerous nozzles which direct unatomized streams of coatings from many different angles onto the surface of the part.

Organic coating means any coating used in a surface coating operation, including dilution solvents, from which volatile organic compound emissions occur during the application or the curing process. For the purpose of this regulation, powder coatings are not included in this definition.

Powder coating means any surface coating which is applied as a dry powder and is fused into a continuous coating film through the use of heat.

Spray application means a method of applying coatings by atomizing and directing the atomized spray toward the part to be coated.

Surface coating operation means the system on a metal furniture surface coating line used to apply and dry or cure an organic coating on the surface of the metal furniture part or product. The surface coating operation may be a prime coat or a top coat operation and includes the coating application station(s), flash-off area, and curing oven.

Transfer efficiency means the ratio of the amount of coating solids deposited onto the surface of a part or product to the total amount of coating solids used.

VOC content means the proportion of a coating that is volatile organic compounds (VOC's), expressed as kilograms of VOC's per liter of coating solids.

VOC emissions means the mass of volatile organic compounds (VOC's), expressed as kilograms of VOC's per liter of applied coating solids, emitted from a metal furniture surface coating operation.

(b) All symbols used in this subpart not defined below are given the meaning in the Act and in subpart A of this part.

C_a=the VOC concentration in each gas stream leaving the control device and entering the atmosphere (parts per million by volume, as carbon)

C_b=the VOC concentration in each gas stream entering the control device (parts per million by volume, as carbon)

C_f=the VOC concentration in each gas stream emitted directly to the atmosphere (parts per million by volume, as carbon)

D_c=density of each coating, as received (kilograms per liter)

D_d=density of each diluent VOC-solvent (kilograms per liter)

D_r=density of VOC-solvent recovered by an emission control device (kilograms per liter)

E=VOC destruction efficiency of the control device (fraction)

F=the proportion of total VOC's emitted by an affected facility that enters the control device (fraction)

G=the volume-weighted average mass of VOC's in coatings consumed in a calendar month per unit volume of coating solids applied (kilograms per liter)

L_c=the volume of each coating consumed, as received (liters)

L_d=the volume of each diluent VOC-solvent added to coatings (liters)

L_r=the volume of VOC-solvent recovered by an emission control device (liters)

L_s=the volume of coating solids consumed (liters)

M_d=the mass of diluent VOC-solvent consumed (kilograms)

M_o=the mass of VOC's in coatings consumed, as received (kilograms)

M_r=the mass of VOC's recovered by an emission control device (kilograms)

N=the volume weighted average mass of VOC emissions to the atmosphere per unit volume of coating solids applied (kilograms per liter)

Q_a=the volumetric flow rate of each gas stream leaving the control device and entering the atmosphere (dry standard cubic meters per hour)

Q_b=the volumetric flow rate of each gas stream entering the control device (dry standard cubic meters per hour)

Q_f=the volumetric flow rate of each gas stream emitted directly to the atmosphere (dry standard cubic meters per hour)

R=the overall VOC emission reduction achieved for an affected facility (fraction)

T=the transfer efficiency (fraction)

V_s=the proportion of solids in each coating (or input stream), as received (fraction by volume)

W_o=the proportion of VOC's in each coating (or input stream), as received (fraction by weight)

§ 60.312 Standard for volatile organic compounds (VOC).

(a) On and after the date on which the initial performance test required to be conducted by § 60.8(a) is completed, no owner or operator subject to the provisions of this subpart shall cause the discharge into the atmosphere of VOC emissions from any metal furniture surface coating operation in excess of 0.90 kilogram of VOC per liter of coating solids applied.

§ 60.313 Performance tests and compliance provisions.

(a) Section 60.8(d) and (f) do not apply to the performance test procedures required by this subpart.

(b) The owner or operator of an affected facility shall conduct an initial performance test as required under § 60.8(a) and thereafter a performance test each calendar month for each affected facility according to the procedures in this section.

(c) The owner or operator shall use the following procedures for determining monthly volume-weighted average emissions of VOC's in kilograms per liter of coating solids applied (G).

(1) An owner or operator shall use the following procedures for any affected facility which does not use a capture system and control device to comply with the emissions limit specified under § 60.312. The owner or operator shall determine the composition of the coatings by formulation data supplied by the manufacturer of the coating or by an analysis of each coating, as received, using Reference Method 24. The Administrator may require the owner or operator who uses formulation data supplied by the manufacturer of the coating to determine the VOC content of coatings using Reference Method 24. The owner or operator shall determine the volume of coating and the mass of VOC-solvent used for thinning purposes from company records on a monthly

basis. If a common coating distribution system serves more than one affected facility or serves both affected and existing facilities, the owner or operator shall estimate the volume of coating used at each facility by using the average dry weight of coating and the surface area coated by each affected and existing facility or by other procedures acceptable to the Administrator.

(i) Calculate the volume-weighted average of the total mass of VOC's consumed per unit volume of coating solids applied (G) during each calendar month for each affected facility, except as provided under §60.313(c)(2) and (c)(3). Each monthly calculation is considered a performance test. Except as provided in paragraph (c)(1)(iv) of this section, the volume-weighted average of the total mass of VOC's consumed per unit volume of coating solids applied (G) each calendar month will be determined by the following procedures.

(A) Calculate the mass of VOC's used (M_o+M_d) during each calendar month for each affected facility by the following equation:

$$M_o + M_d = \sum_{i=1}^{n} L_{ci} D_{ci} W_{oi} + \sum_{j=1}^{m} L_{dj} D_{dj}$$

($\Sigma L_{dj} D_{dj}$ will be 0 if no VOC solvent is added to the coatings, as received.)

Where: n is the number of different coatings used during the calendar month and m is the number of different diluent VOC-solvents used during the calendar month.

(B) Calculate the total volume of coating solids used (L_s) in each calendar month for each affected facility by the following equation:

$$L_s = \sum_{i=1}^{n} L_{ci} V_{si}$$

Where: n is the number of different coatings used during the calendar month.

Select the appropriate transfer efficiency from Table 1. If the owner or operator can demonstrate to the satisfaction of the Administrator that other transfer efficiencies other than those shown are appropriate, the Administrator will approve their use on a case-by-case basis. Transfer efficiency values for application methods not listed below shall be determined by the Administrator on a case-by-case basis. An owner or operator must submit sufficient data for the Administrator to judge the accuracy of the transfer efficiency claims.

TABLE 1—TRANSFER EFFICIENCIES

Application methods	Transfer efficiency (T)
Air atomized spray	0.25
Airless spray	.25
Manual electrostatic spray	.60
Nonrotational automatic electrostatic spray	.70
Rotating head electrostatic spray (manual and automatic)	.80
Dip coat and flow coat	.90
Electrodeposition	.95

Where more than one application method is used within a single surface coating operation, the owner or operator shall determine the composition and volume of each coating applied by each method through a means acceptable to the Administrator and compute the weighted average transfer efficiency by the following equation:

$$T = \frac{\sum_{i=1}^{n} L_{cik} V_{sik} T_k}{\sum_{k=1}^{p} L_s}$$

Where n is the number of coatings used and p is the number of application methods used.

(C) Calculate the volume-weighted average mass of VOC's consumed per unit volume of coating solids applied (G) during the calendar month for each affected facility by the following equation:

$$G = \frac{M_o + M_d}{L_s T}$$

(ii) Calculate the volume-weighted average of VOC emissions to the atmosphere (N) during the calendar month for each affected facility by the following equation:

N=G

(iii) Where the volume-weighted average mass of VOC discharged to the atmosphere per unit volume of coating solids applied (N) is less than or equal

to 0.90 kilogram per liter, the affected facility is in compliance.

(iv) If each individual coating used by an affected facility has a VOC content, as received, which when divided by the lowest transfer efficiency at which the coating is applied, results in a value equal to or less than 0.90 kilogram per liter, the affected facility is in compliance provided no VOC's are added to the coatings during distribution or application.

(2) An owner or operator shall use the following procedures for any affected facility that uses a capture system and a control device that destroys VOC's (e.g., incinerator) to comply with the emission limit specified under § 60.312.

(i) Determine the overall reduction efficiency (R) for the capture system and control device. For the initial performance test the overall reduction efficiency (R) shall be determined as prescribed in (c)(2)(i) (A), (B), and (C) of this section. In subsequent months, the owner or operator may use the most recently determined overall reduction efficiency (R) for the performance test providing control device and capture system operating conditions have not changed. The procedure in, (c)(2)(i) (A), (B), and (C), of this section, shall be repeated when directed by the Administrator or when the owner or operator elects to operate the control device or capture system at conditions different from the initial performance test.

(A) Determine the fraction (F) of total VOC's emitted by an affected facility that enters the control device using the following equation:

$$F = \frac{\sum_{i=1}^{n} C_{bi} Q_{bi}}{\sum_{i=1}^{n} C_{bi} Q_{bi} + \sum_{j=1}^{m} C_{fj} Q_{fj}}$$

Where

n is the number of gas streams entering the control device and

m is the number of gas streams emitted directly to the atmosphere.

(B) Determine the destruction efficiency of the control device (E) using values of the volumetric flow rate of each of the gas streams and the VOC content (as carbon) of each of the gas streams in and out of the device by the following equation:

$$E = \frac{\sum_{i=1}^{n} Q_{bi} C_{bi} - \sum_{j=1}^{m} Q_{aj} C_{aj}}{\sum_{i=1}^{n} Q_{bi} C_{bi}}$$

Where:

n is the number of gas streams entering the control device, and

m is the number of gas streams leaving the contol device and entering the atmosphere.

(C) Determine overall reduction efficiency (R) using the following equation:

$R = EF$

(ii) Calculate the volume-weighted average of the total mass of VOC's per unit volume of coating solids applied (G) during each calendar month for each affected facility using equations in paragraphs (c)(1)(i) (A), (B), and (C) of this section.

(iii) Calculate the volume-weighted average of VOC emissions to the atmosphere (N) during each calendar month by the following equation:

$N = G(1 - R)$

(iv) If the volume-weighted average mass of VOC's emitted to the atmosphere for each calendar month (N) is less than or equal to 0.90 kilogram per liter of coating solids applied, the affected facility is in compliance. Each monthly calculation is a performance test.

(3) An owner or operator shall use the following procedure for any affected facility which uses a control device that recovers the VOC's (e.g., carbon adsorber) to comply with the applicable emission limit specified under § 60.312.

(i) Calculate the total mass of VOC's consumed ($M_o + M_d$) and the volume-weighted average of the total mass of VOC's per unit volume of coating solids applied (G) during each calendar month for each affected facility using equations in paragraph (c)(1)(i) (A), (B), and (C) of this section.

(ii) Calculate the total mass of VOC's recovered (M_r) during each calendar month using the following equation:

$M_r = L_r D_r$

(iii) Calculate overall reduction efficiency of the control device (R) for each calendar month for each affected facility using the following equation:

$$R = \frac{M_r}{M_o + M_d}$$

(iv) Calculate the volume-weighted average mass of VOC's emitted to the atmosphere (N) for each calendar month for each affected facility using equation in paragraph (c)(2)(iii) of this section.

(v) If the weighted average mass of VOC's emitted to the atmosphere for each calendar month (N) is less than or equal to 0.90 kilogram per liter of coating solids applied, the affected facility is in compliance. Each monthly calculation is a performance test.

§ 60.314 Monitoring of emissions and operations.

(a) The owner or operator of an affected facility which uses a capture system and an incinerator to comply with the emission limits specified under § 60.312 shall install, calibrate, maintain, and operate temperature measurement devices according to the following procedures:

(1) Where thermal incineration is used, a temperature measurement device shall be installed in the firebox. Where catalytic incineration is used, a temperature measurement device shall be installed in the gas stream immediately before and after the catalyst bed.

(2) Each temperature measurement device shall be installed, calibrated, and maintained according to the manufacturer's specifications. The device shall have an accuracy of the greater of 0.75 percent of the temperature being measured expressed in degrees Celsius or ±2.5 °C.

(3) Each temperature measurement device shall be equipped with a recording device so that a permanent continuous record is produced.

(b) The owner or operator of an affected facility which uses a capture system and a solvent recovery system to comply with the emission limits specified under § 60.312 shall install the equipment necessary to determine the total volume of VOC-solvent recovered daily.

§ 60.315 Reporting and recordkeeping requirements.

(a) The reporting requirements of § 60.8(a) apply only to the initial performance test. Each owner or operator subject to the provisions of this subpart shall include the following data in the report of the initial performance test required under § 60.8(a):

(1) Except as provided in paragraph (a)(2) of this section, the volume-weighted average mass of VOC's emitted to the atmosphere per volume of applied coating solids (N) for a period of one calendar month from each affected facility.

(2) For each affected facility where compliance is determined under the provisions of § 60.313(c)(1)(iv), a list of the coatings used during a period of one calendar month, the VOC content of each coating calculated from data determined using Reference Method 24 or supplied by the manufacturer of the coating, and the minimum transfer efficiency of any coating application equipment used during the month.

(3) For each affected facility where compliance is achieved through the use of an incineration system, the following additional information will be reported:

(i) The proportion of total VOC's emitted that enters the control device (F),

(ii) The VOC reduction efficiency of the control device (E),

(iii) The average combustion temperature (or the average temperature upstream and downstream of the catalyst bed), and

(iv) A description of the method used to establish the amount of VOC's captured and sent to the incinerator.

(4) For each affected facility where compliance is achieved through the use of a solvent recovery system, the following additional information will be reported:

(i) The volume of VOC-solvent recovered (L_r), and

(ii) The overall VOC emission reduction achieved (R).

(b) Following the initial performance test, the owner or operator of an affected facility shall identify, record, and submit a written report to the Administrator every calendar quarter of each instance in which the volume-

weighted average of the total mass of VOC's emitted to the atmosphere per volume of applied coating solids (N) is greater than the limit specified under § 60.312. If no such instances have occurred during a particular quarter, a report stating this shall be submitted to the Administrator semiannually.

(c) Following the initial performance test, the owner or operator of an affected facility shall identify, record, and submit at the frequency specified in § 60.7(c) the following:

(1) Where compliance with § 60.312 is achieved through the use of thermal incineration, each 3-hour period when metal furniture is being coated during which the average temperature of the device was more than 28 °C below the average temperature of the device during the most recent performance test at which destruction efficiency was determined as specified under § 60.313.

(2) Where compliance with § 60.312 is achieved through the use of catalytic incineration, each 3-hour period when metal furniture is being coated during which the average temperature of the device immediately before the catalyst bed is more than 28 °C below the average temperature of the device immediately before the catalyst bed during the most recent performance test at which destruction efficiency was determined as specified under § 60.313. Additionally, when metal furniture is being coated, all 3-hour periods during which the average temperature difference across the catalyst bed is less than 80 percent of the average temperature difference across the catalyst bed during the most recent performance test at which destruction efficiency was determined as specified under § 60.313 will be recorded.

(3) For thermal and catalytic incinerators, if no such periods as described in paragraphs (c)(1) and (c)(2) of this section occur, the owner or operator shall state this in the report.

(d) Each owner or operator subject to the provisions of this subpart shall maintain at the source, for a period of at least 2 years, records of all data and calculations used to determine VOC emissions from each affected facility. Where compliance is achieved through the use of thermal incineration, each owner or operator shall maintain, at the source, daily records of the incinerator combustion chamber temperature. If catalytic incineration is used, the owner or operator shall maintain at the source daily records of the gas temperature, both upstream and downstream of the incinerator catalyst bed. Where compliance is achieved through the use of a solvent recovery system, the owner or operator shall maintain at the source daily records of the amount of solvent recovered by the system for each affected facility.

[47 FR 49287, Oct. 29, 1982, as amended at 55 FR 51383, Dec. 13, 1990]

§ 60.316 Test methods and procedures.

(a) The reference methods in appendix A to this part except as provided under § 60.8(b) shall be used to determine compliance with § 60.312 as follows:

(1) Method 24, or coating manufacturer's formulation data, for use in the determination of VOC content of each batch of coating as applied to the surface of the metal parts. In case of an inconsistency between the Method 24 results and the formulation data, the Method 24 results will govern.

(2) Method 25 for the measurement of VOC concentration.

(3) Method 1 for sample and velocity traverses.

(4) Method 2 for velocity and volumetric flow rate.

(5) Method 3 for gas analysis.

(6) Method 4 for stack gas moisture.

(b) For Method 24, the coating sample must be at least a 1 liter sample in a 1 liter container taken at a point where the sample will be representative of the coating material as applied to the surface of the metal part.

(c) For Method 25, the minimum sampling time for each of 3 runs is 60 minutes and the minimum sample volume is 0.003 dry standard cubic meters except that shorter sampling times or smaller volumes, when necessitated by process variables or other factors, may be approved by the Administrator.

(d) The Administrator will approve testing of representative stacks on a case-by-case basis if the owner or operator can demonstrate to the satisfaction of the Administrator that testing of representative stacks yields results

comparable to those that would be obtained by testing all stacks.

Subpart FF [Reserved]

Subpart GG—Standards of Performance for Stationary Gas Turbines

§ 60.330 Applicability and designation of affected facility.

(a) The provisions of this subpart are applicable to the following affected facilities: All stationary gas turbines with a heat input at peak load equal to or greater than 10.7 gigajoules per hour, based on the lower heating value of the fuel fired.

(b) Any facility under paragraph (a) of this section which commences construction, modification, or reconstruction after October 3, 1977, is subject to the requirements of this part except as provided in paragraphs (e) and (j) of § 60.332.

[44 FR 52798, Sept. 10, 1979, as amended at 52 FR 42434, Nov. 5, 1987]

§ 60.331 Definitions.

As used in this subpart, all terms not defined herein shall have the meaning given them in the Act and in subpart A of this part.

(a) *Stationary gas turbine* means any simple cycle gas turbine, regenerative cycle gas turbine or any gas turbine portion of a combined cycle steam/electric generating system that is not self propelled. It may, however, be mounted on a vehicle for portability.

(b) *Simple cycle gas turbine* means any stationary gas turbine which does not recover heat from the gas turbine exhaust gases to preheat the inlet combustion air to the gas turbine, or which does not recover heat from the gas turbine exhaust gases to heat water or generate steam.

(c) *Regenerative cycle gas turbine* means any stationary gas turbine which recovers heat from the gas turbine exhaust gases to preheat the inlet combustion air to the gas turbine.

(d) *Combined cycle gas turbine* means any stationary gas turbine which recovers heat from the gas turbine exhaust gases to heat water or generate steam.

(e) *Emergency gas turbine* means any stationary gas turbine which operates as a mechanical or electrical power source only when the primary power source for a facility has been rendered inoperable by an emergency situation.

(f) *Ice fog* means an atmospheric suspension of highly reflective ice crystals.

(g) *ISO standard day conditions* means 288 degrees Kelvin, 60 percent relative humidity and 101.3 kilopascals pressure.

(h) *Efficiency* means the gas turbine manufacturer's rated heat rate at peak load in terms of heat input per unit of power output based on the lower heating value of the fuel.

(i) *Peak load* means 100 percent of the manufacturer's design capacity of the gas turbine at ISO standard day conditions.

(j) *Base load* means the load level at which a gas turbine is normally operated.

(k) *Fire-fighting turbine* means any stationary gas turbine that is used solely to pump water for extinguishing fires.

(l) *Turbines employed in oil/gas production or oil/gas transportation* means any stationary gas turbine used to provide power to extract crude oil/natural gas from the earth or to move crude oil/natural gas, or products refined from these substances through pipelines.

(m) A *Metropolitan Statistical Area* or *MSA* as defined by the Department of Commerce.

(n) *Offshore platform gas turbines* means any stationary gas turbine located on a platform in an ocean.

(o) *Garrison facility* means any permanent military installation.

(p) *Gas turbine model* means a group of gas turbines having the same nominal air flow, combuster inlet pressure, combuster inlet temperature, firing temperature, turbine inlet temperature and turbine inlet pressure.

(q) *Electric utility stationary gas turbine* means any stationary gas turbine constructed for the purpose of supplying more than one-third of its potential electric output capacity to any utility power distribution system for sale.

(r) *Emergency fuel* is a fuel fired by a gas turbine only during circumstances,

such as natural gas supply curtailment or breakdown of delivery system, that make it impossible to fire natural gas in the gas turbine.

(s) *Regenerative cycle gas turbine* means any stationary gas turbine that recovers thermal energy from the exhaust gases and utilizes the thermal energy to preheat air prior to entering the combustor.

[44 FR 52798, Sept. 10, 1979, as amended at 47 FR 3770, Jan. 27, 1982]

§ 60.332 Standard for nitrogen oxides.

(a) On and after the date of the performance test required by § 60.8 is completed, every owner or operator subject to the provisions of this subpart as specified in paragraphs (b), (c), and (d) of this section shall comply with one of the following, except as provided in paragraphs (e), (f), (g), (h), (i), (j), (k), and (l) of this section.

(1) No owner or operator subject to the provisions of this subpart shall cause to be discharged into the atmosphere from any stationary gas turbine, any gases which contain nitrogen oxides in excess of:

$$STD = 0.0075\frac{(14.4)}{Y} + F$$

where:

STD=allowable NO_x emissions (percent by volume at 15 percent oxygen and on a dry basis).

Y=manufacturer's rated heat rate at manufacturer's rated load (kilojoules per watt hour) or, actual measured heat rate based on lower heating value of fuel as measured at actual peak load for the facility. The value of Y shall not exceed 14.4 kilojoules per watt hour.

F=NO_x emission allowance for fuel-bound nitrogen as defined in paragraph (a)(3) of this section.

(2) No owner or operator subject to the provisions of this subpart shall cause to be discharged into the atmosphere from any stationary gas turbine, any gases which contain nitrogen oxides in excess of:

$$STD = 0.0150\frac{(14.4)}{Y} + F$$

where:

STD=allowable NO_x emissions (percent by volume at 15 percent oxygen and on a dry basis).

Y=manufacturer's rated heat rate at manufacturer's rated peak load (kilojoules per watt hour), or actual measured heat rate based on lower heating value of fuel as measured at actual peak load for the facility. The value of Y shall not exceed 14.4 kilojoules per watt hour.

F=NO_x emission allowance for fuel-bound nitrogen as defined in paragraph (a)(3) of this section.

(3) F shall be defined according to the nitrogen content of the fuel as follows:

Fuel-bound nitrogen (percent by weight)	F (NO_x percent by volume)
N≤0.015	0
0.015< N≤0.1	0.04(N)
0.1< N≤0.25	0.004+0.0067(N–0.1)
N>0.25	0.005

where:

N=the nitrogen content of the fuel (percent by weight).

or:

Manufacturers may develop custom fuel-bound nitrogen allowances for each gas turbine model they manufacture. These fuel-bound nitrogen allowances shall be substantiated with data and must be approved for use by the Administrator before the initial performance test required by § 60.8. Notices of approval of custom fuel-bound nitrogen allowances will be published in the FEDERAL REGISTER.

(b) Electric utility stationary gas turbines with a heat input at peak load greater than 107.2 gigajoules per hour (100 million Btu/hour) based on the lower heating value of the fuel fired shall comply with the provisions of paragraph (a)(1) of this section.

(c) Stationary gas turbines with a heat input at peak load equal to or greater than 10.7 gigajoules per hour (10 million Btu/hour) but less than or equal to 107.2 gigajoules per hour (100 million Btu/hour) based on the lower heating value of the fuel fired, shall comply with the provisions of paragraph (a)(2) of this section.

(d) Stationary gas turbines with a manufacturer's rated base load at ISO conditions of 30 megawatts or less except as provided in § 60.332(b) shall comply with paragraph (a)(2) of this section.

(e) Stationary gas turbines with a heat input at peak load equal to or greater than 10.7 gigajoules per hour (10 million Btu/hour) but less than or equal to 107.2 gigajoules per hour (100 million Btu/hour) based on the lower heating value of the fuel fired and that have commenced construction prior to October 3, 1982 are exempt from paragraph (a) of this section.

(f) Stationary gas turbines using water or steam injection for control of NO_x emissions are exempt from paragraph (a) when ice fog is deemed a traffic hazard by the owner or operator of the gas turbine.

(g) Emergency gas turbines, military gas turbines for use in other than a garrison facility, military gas turbines installed for use as military training facilities, and fire fighting gas turbines are exempt from paragraph (a) of this section.

(h) Stationary gas turbines engaged by manufacturers in research and development of equipment for both gas turbine emission control techniques and gas turbine efficiency improvements are exempt from paragraph (a) on a case-by-case basis as determined by the Administrator.

(i) Exemptions from the requirements of paragraph (a) of this section will be granted on a case-by-case basis as determined by the Administrator in specific geographical areas where mandatory water restrictions are required by governmental agencies because of drought conditions. These exemptions will be allowed only while the mandatory water restrictions are in effect.

(j) Stationary gas turbines with a heat input at peak load greater than 107.2 gigajoules per hour that commenced construction, modification, or reconstruction between the dates of October 3, 1977, and January 27, 1982, and were required in the September 10, 1979, FEDERAL REGISTER (44 FR 52792) to comply with paragraph (a)(1) of this section, except electric utility stationary gas turbines, are exempt from paragraph (a) of this section.

(k) Stationary gas turbines with a heat input greater than or equal to 10.7 gigajoules per hour (10 million Btu/hour) when fired with natural gas are exempt from paragraph (a)(2) of this section when being fired with an emergency fuel.

(l) Regenerative cycle gas turbines with a heat input less than or equal to 107.2 gigajoules per hour (100 million Btu/hour) are exempt from paragraph (a) of this section.

[44 FR 52798, Sept. 10, 1979, as amended at 47 FR 3770, Jan. 27, 1982]

§ 60.333 Standard for sulfur dioxide.

On and after the date on which the performance test required to be conducted by § 60.8 is completed, every owner or operator subject to the provision of this subpart shall comply with one or the other of the following conditions:

(a) No owner or operator subject to the provisions of this subpart shall cause to be discharged into the atmosphere from any stationary gas turbine any gases which contain sulfur dioxide in excess of 0.015 percent by volume at 15 percent oxygen and on a dry basis.

(b) No owner or operator subject to the provisions of this subpart shall burn in any stationary gas turbine any fuel which contains sulfur in excess of 0.8 percent by weight.

[44 FR 52798, Sept. 10, 1979]

§ 60.334 Monitoring of operations.

(a) The owner or operator of any stationary gas turbine subject to the provisions of this subpart and using water injection to control NO_x emissions shall install and operate a continuous monitoring system to monitor and record the fuel consumption and the ratio of water to fuel being fired in the turbine. This system shall be accurate to within ±5.0 percent and shall be approved by the Administrator.

(b) The owner or operator of any stationary gas turbine subject to the provisions of this subpart shall monitor sulfur content and nitrogen content of the fuel being fired in the turbine. The frequency of determination of these values shall be as follows:

(1) If the turbine is supplied its fuel from a bulk storage tank, the values shall be determined on each occasion that fuel is transferred to the storage tank from any other source.

(2) If the turbine is supplied its fuel without intermediate bulk storage the

values shall be determined and recorded daily. Owners, operators or fuel vendors may develop custom schedules for determination of the values based on the design and operation of the affected facility and the characteristics of the fuel supply. These custom schedules shall be substantiated with data and must be approved by the Administrator before they can be used to comply with paragraph (b) of this section.

(c) For the purpose of reports required under § 60.7(c), periods of excess emissions that shall be reported are defined as follows:

(1) *Nitrogen oxides.* Any one-hour period during which the average water-to-fuel ratio, as measured by the continuous monitoring system, falls below the water-to-fuel ratio determined to demonstrate compliance with § 60.332 by the performance test required in § 60.8 or any period during which the fuel-bound nitrogen of the fuel is greater than the maximum nitrogen content allowed by the fuel-bound nitrogen allowance used during the performance test required in § 60.8. Each report shall include the average water-to-fuel ratio, average fuel consumption, ambient conditions, gas turbine load, and nitrogen content of the fuel during the period of excess emissions, and the graphs or figures developed under § 60.335(a).

(2) *Sulfur dioxide.* Any daily period during which the sulfur content of the fuel being fired in the gas turbine exceeds 0.8 percent.

(3) *Ice fog.* Each period during which an exemption provided in § 60.332(g) is in effect shall be reported in writing to the Administrator quarterly. For each period the ambient conditions existing during the period, the date and time the air pollution control system was deactivated, and the date and time the air pollution control system was reactivated shall be reported. All quarterly reports shall be postmarked by the 30th day following the end of each calendar quarter.

(4) *Emergency fuel.* Each period during which an exemption provided in § 60.332(k) is in effect shall be included in the report required in § 60.7(c). For each period, the type, reasons, and duration of the firing of the emergency fuel shall be reported.

[44 FR 52798, Sept. 10, 1979, as amended at 47 FR 3770, Jan. 27, 1982]

§ 60.335 Test methods and procedures.

(a) To compute the nitrogen oxides emissions, the owner or operator shall use analytical methods and procedures that are accurate to within 5 percent and are approved by the Administrator to determine the nitrogen content of the fuel being fired.

(b) In conducting the performance tests required in § 60.8, the owner or operator shall use as reference methods and procedures the test methods in appendix A of this part or other methods and procedures as specified in this section, except as provided for in § 60.8(b). Acceptable alternative methods and procedures are given in paragraph (f) of this section.

(c) The owner or operator shall determine compliance with the nitrogen oxides and sulfur dioxide standards in §§ 60.332 and 60.333(a) as follows:

(1) The nitrogen oxides emission rate (NO_x) shall be computed for each run using the following equation:

$$NO_x=(NO_{xo})\ (P_r/P_o)^{0.5}\ e^{19(Ho—0.00633)}\ (288°K/T_a)^{1.53}$$

where:

NO_x=emission rate of NO_x at 15 percent O_2 and ISO standard ambient conditions, volume percent.

NO_{xo}=observed NO_x concentration, ppm by volume.

P_r=reference combustor inlet absolute pressure at 101.3 kilopascals ambient pressure, mm Hg.

P_o=observed combustor inlet absolute pressure at test, mm Hg.

H_o=observed humidity of ambient air, g H_2O/g air.

e=transcendental constant, 2.718.

T_a=ambient temperature, °K.

(2) The monitoring device of § 60.334(a) shall be used to determine the fuel consumption and the water-to-fuel ratio necessary to comply with § 60.332 at 30, 50, 75, and 100 percent of peak load or at four points in the normal operating range of the gas turbine, including the minimum point in the range and peak load. All loads shall be corrected to ISO conditions using the appropriate equations supplied by the manufacturer.

(3) Method 20 shall be used to determine the nitrogen oxides, sulfur dioxide, and oxygen concentrations. The span values shall be 300 ppm of nitrogen oxide and 21 percent oxygen. The NO_x emissions shall be determined at each of the load conditions specified in paragraph (c)(2) of this section.

(d) The owner or operator shall determine compliance with the sulfur content standard in §60.333(b) as follows: ASTM D 2880–71 shall be used to determine the sulfur content of liquid fuels and ASTM D 1072–80, D 3031–81, D 4084–82, or D 3246–81 shall be used for the sulfur content of gaseous fuels (incorporated by reference—see §60.17). The applicable ranges of some ASTM methods mentioned above are not adequate to measure the levels of sulfur in some fuel gases. Dilution of samples before analysis (with verification of the dilution ratio) may be used, subject to the approval of the Administrator.

(e) To meet the requirements of §60.334(b), the owner or operator shall use the methods specified in paragraphs (a) and (d) of this section to determine the nitrogen and sulfur contents of the fuel being burned. The analysis may be performed by the owner or operator, a service contractor retained by the owner or operator, the fuel vendor, or any other qualified agency.

(f) The owner or operator may use the following as alternatives to the reference methods and procedures specified in this section:

(1) Instead of using the equation in paragraph (b)(1) of this section, manufacturers may develop ambient condition correction factors to adjust the nitrogen oxides emission level measured by the performance test as provided in §60.8 to ISO standard day conditions. These factors are developed for each gas turbine model they manufacture in terms of combustion inlet pressure, ambient air pressure, ambient air humidity, and ambient air temperature. They shall be substantiated with data and must be approved for use by the Administrator before the initial performance test required by §60.8. Notices of approval of custom ambient condition correction factors will be published in the FEDERAL REGISTER.

[54 FR 6675, Feb. 14, 1989, as amended at 54 FR 27016, June 27, 1989],

Subpart HH—Standards of Performance for Lime Manufacturing Plants

SOURCE: 49 FR 18080, Apr. 26, 1984, unless otherwise noted.

§60.340 Applicability and designation of affected facility.

(a) The provisions of this subpart are applicable to each rotary lime kiln used in the manufacture of lime.

(b) The provisions of this subpart are not applicable to facilities used in the manufacture of lime at kraft pulp mills.

(c) Any facility under paragraph (a) of this section that commences construction or modification after May 3, 1977, is subject to the requirements of this subpart.

§60.341 Definitions.

As used in this subpart, all terms not defined herein shall have the same meaning given them in the Act and in the General Provisions.

(a) *Lime manufacturing plant* means any plant which uses a rotary lime kiln to produce lime product from limestone by calcination.

(b) *Lime product* means the product of the calcination process including, but not limited to, calcitic lime, dolomitic lime, and dead-burned dolomite.

(c) *Positive-pressure fabric filter* means a fabric filter with the fans on the upstream side of the filter bags.

(d) *Rotary lime kiln* means a unit with an inclined rotating drum that is used to produce a lime product from limestone by calcination.

(e) *Stone feed* means limestone feedstock and millscale or other iron oxide additives that become part of the product.

§60.342 Standard for particulate matter.

(a) On and after the date on which the performance test required to be conducted by §60.8 is completed, no

owner or operator subject to the provisions of this subpart shall cause to be discharged into the atmosphere from any rotary lime kiln any gases which:

(1) Contain particulate matter in excess of 0.30 kilogram per megagram (0.60 lb/ton) of stone feed.

(2) Exhibit greater than 15 percent opacity when exiting from a dry emission control device.

§ 60.343 Monitoring of emissions and operations.

(a) The owner or operator of a facility that is subject to the provisions of this subpart shall install, calibrate, maintain, and operate a continuous monitoring system, except as provided in paragraphs (b) and (c) of this section, to monitor and record the opacity of a representative portion of the gases discharged into the atmosphere from any rotary lime kiln. The span of this system shall be set at 40 percent opacity.

(b) The owner or operator of any rotary lime kiln having a control device with a multiple stack exhaust or a roof monitor may, in lieu of the continuous opacity monitoring requirement of § 60.343(a), monitor visible emissions at least once per day of operation by using a certified visible emissions observer who, for each site where visible emissions are observed, will perform three Method 9 tests and record the results. Visible emission observations shall occur during normal operation of the rotary lime kiln at least once per day. For at least three 6-minute periods, the opacity shall be recorded for any point(s) where visible emissions are observed, and the corresponding feed rate of the kiln shall also be recorded. Records shall be maintained of any 6-minute average that is in excess of the emissions specified in § 60.342(a) of this subpart.

(c) The owner or operator of any rotary lime kiln using a wet scrubbing emission control device subject to the provisions of this subpart shall not be required to monitor the opacity of the gases discharged as required in paragraph (a) of this section, but shall install, calibrate, maintain, operate, and record the resultant information from the following continuous monitoring devices:

(1) A monitoring device for the continuous measurement of the pressure loss of the gas stream through the scrubber. The monitoring device must be accurate within ±250 pascals (one inch of water).

(2) A monitoring device for continuous measurement of the scrubbing liquid supply pressure to the control device. The monitoring device must be accurate within ±5 percent of the design scrubbing liquid supply pressure.

(d) For the purpose of conducting a performance test under § 60.8, the owner or operator of any lime manufacturing plant subject to the provisions of this subpart shall install, calibrate, maintain, and operate a device for measuring the mass rate of stone feed to any affected rotary lime kiln. The measuring device used must be accurate to within ±5 percent of the mass rate over its operating range.

(e) For the purpose of reports required under § 60.7(c), periods of excess emissions that shall be reported are defined as all 6-minute periods during which the average opacity of the visible emissions from any lime kiln subject to paragraph (a) of this subpart is greater than 15 percent or, in the case of wet scrubbers, any period in which the scrubber pressure drop is greater than 30 percent below the rate established during the performance test. If visible emission observations are made according to paragraph (b) of this section, reports of excess emissions shall be submitted semiannually.

[49 FR 18080, Apr. 26, 1984, as amended at 52 FR 4773, Feb. 17, 1987; 54 FR 6675, Feb. 14, 1989]

§ 60.344 Test methods and procedures.

(a) In conducting the performance tests required in § 60.8, the owner or operator shall use as reference methods and procedures the test methods in appendix A of this part or other methods and procedures as specified in this section, except as provided in § 60.8(b).

(b) The owner or operator shall determine compliance with the particulate matter standards in § 60.342(a) as follows:

(1) The emission rate (E) of particulate matter shall be computed for each run using the following equation:

$$E=(c_s Q_{sd})/PK)$$

where:
E=emission rate of particulate matter, kg/Mg (1b/ton) of stone feed.
c_s=concentration of particulate matter, g/dscm (g/dscf).
Q_{sd}=volumetric flow rate of effluent gas, dscm/hr (dscf/hr).
P=stone feed rate, Mg/hr (ton/hr).
K=conversion factor, 1000 g/kg (453.6 g/lb).

(2) Method 5 shall be used at negative-pressure fabric filters and other types of control devices and Method 5D shall be used as positive-pressure fabric filters to determine the particulate matter concentration (c_s) and the volumetric flow rate (Q_{sd}) of the effluent gas. The sampling time and sample volume for each run shall be at least 60 minutes and 0.90 dscm (31.8 dscf).

(3) The monitoring device of §60.343(d) shall be used to determine the stone feed rate (P) for each run.

(4) Method 9 and the procedures in §60.11 shall be used to determine opacity.

(c) During the particulate matter run, the owner or operator shall use the monitoring devices in §60.343(c)(1) and (2) to determine the average pressure loss of the gas stream through the scrubber and the average scrubbing liquid supply pressure.

[54 FR 6675, Feb. 14, 1989]

Subpart KK—Standards of Performance for Lead-Acid Battery Manufacturing Plants

SOURCE: 47 FR 16573, Apr. 16, 1982, unless otherwise noted.

§60.370 Applicability and designation of affected facility.

(a) The provisions of this subpart are applicable to the affected facilities listed in paragraph (b) of this section at any lead-acid battery manufacturing plant that produces or has the design capacity to produce in one day (24 hours) batteries containing an amount of lead equal to or greater than 5.9 Mg (6.5 tons).

(b) The provisions of this subpart are applicable to the following affected facilities used in the manufacture of lead-acid storage batteries:

(1) Grid casting facility.

(2) Paste mixing facility.

(3) Three-process operation facility.

(4) Lead oxide manufacturing facility.

(5) Lead reclamation facility.

(6) Other lead-emitting operations.

(c) Any facility under paragraph (b) of this section the construction or modification of which is commenced after January 14, 1980, is subject to the requirements of this subpart.

§60.371 Definitions.

As used in this subpart, all terms not defined herein shall have the meaning given them in the Act and in subpart A of this part.

(a) *Grid casting facility* means the facility which includes all lead melting pots and machines used for casting the grid used in battery manufacturing.

(b) *Lead-acid battery manufacturing plant* means any plant that produces a storage battery using lead and lead compounds for the plates and sulfuric acid for the electrolyte.

(c) *Lead oxide manufacturing facility* means a facility that produces lead oxide from lead, including product recovery.

(d) *Lead reclamation facility* means the facility that remelts lead scrap and casts it into lead ingots for use in the battery manufacturing process, and which is not a furnace affected under subpart L of this part.

(e) *Other lead-emitting operation* means any lead-acid battery manufacturing plant operation from which lead emissions are collected and ducted to the atmosphere and which is not part of a grid casting, lead oxide manufacturing, lead reclamation, paste mixing, or three-process operation facility, or a furnace affected under subpart L of this part.

(f) *Paste mixing facility* means the facility including lead oxide storage, conveying, weighing, metering, and charging operations; paste blending, handling, and cooling operations; and plate pasting, takeoff, cooling, and drying operations.

(g) *Three-process operation facility* means the facility including those processes involved with plate stacking, burning or strap casting, and assembly of elements into the battery case.

§ 60.372 Standards for lead.

(a) On and after the date on which the performance test required to be conducted by § 60.8 is completed, no owner or operator subject to the provisions of this subpart shall cause to be discharged into the atmosphere:

(1) From any grid casting facility any gases that contain lead in excess of 0.40 milligram of lead per dry standard cubic meter of exhaust (0.000176 gr/dscf).

(2) From any paste mixing facility any gases that contain in excess of 1.00 milligram of lead per dry standard cubic meter of exhaust (0.00044 gr/dscf).

(3) From any three-process operation facility any gases that contain in excess of 1.00 milligram of lead per dry standard cubic meter of exhaust (0.00044 gr/dscf).

(4) From any lead oxide manufacturing facility any gases that contain in excess of 5.0 milligrams of lead per kilogram of lead feed (0.010 lb/ton).

(5) From any lead reclamation facility any gases that contain in excess of 4.50 milligrams of lead per dry standard cubic meter of exhaust (0.00198 gr/dscf).

(6) From any other lead-emitting operation any gases that contain in excess of 1.00 milligram per dry standard cubic meter of exhaust (0.00044 gr/dscf).

(7) From any affected facility other than a lead reclamation facility any gases with greater than 0 percent opacity (measured according to Method 9 and rounded to the nearest whole percentage).

(8) From any lead reclamation facility any gases with greater than 5 percent opacity (measured according to Method 9 and rounded to the nearest whole percentage).

(b) When two or more facilities at the same plant (except the lead oxide manufacturing facility) are ducted to a common control device, an equivalent standard for the total exhaust from the commonly controlled facilities shall be determined as follows:

$$S_e = \sum_{a=1}^{N} S_a (Q_{sd_a} / Q_{sd_T})$$

Where:

S_e=is the equivalent standard for the total exhaust stream.

S_a=is the actual standard for each exhaust stream ducted to the control device.

N=is the total number of exhaust streams ducted to the control device.

Q_{sda}=is the dry standard volumetric flow rate of the effluent gas stream from each facility ducted to the control device.

Q_{sdT}=is the total dry standard volumetric flow rate of all effluent gas streams ducted to the control device.

§ 60.373 Monitoring of emissions and operations.

The owner or operator of any lead-acid battery manufacturing facility subject to the provisions of this subpart and controlled by a scrubbing system(s) shall install, calibrate, maintain, and operate a monitoring device(s) that measures and records the pressure drop across the scrubbing system(s) at least once every 15 minutes. The monitoring device shall have an accuracy of ±5 percent over its operating range.

§ 60.374 Test methods and procedures.

(a) In conducting the performance tests required in § 60.8, the owner or operator shall use as reference methods and procedures the test methods in appendix A of this part or other methods and procedures as specified in this section, except as provided in § 60.8(b).

(b) The owner or operator shall determine compliance with the lead standards in § 60.372, except § 60.372(a)(4), as follows:

(1) Method 12 shall be used to determine the lead concentration and, if applicable, the volumetric flow rate (Q_{sda}) of the effluent gas. The sampling time and sample volume for each run shall be at least 60 minutes and 0.85 dscm (30 dscf).

(2) When different operations in a three-process operation facility are ducted to separate control devices, the lead emission concentration (C) from the facility shall be determined as follows:

$$C = \left[\sum_{a=1}^{n} (C_s Q_{sda}) \right] / \sum_{a=1}^{n} Q_{sda}$$

where:

C=concentration of lead emissions for the entire facility, mg/dscm (gr/dscf).

C_a=concentration of lead emissions from facility ''a'', mg/dscm (gr/dscf).
Q_{sda}=volumetric flow rate of effluent gas from facility ''a'', dscm/hr (dscf/hr).
N=total number of control devices to which separate operations in the facility are ducted.

(3) Method 9 and the procedures in § 60.11 shall be used to determine opacity. The opacity numbers shall be rounded off to the nearest whole percentage.

(c) The owner or operator shall determine compliance with the lead standard in § 60.372(a)(4) as follows:

(1) The emission rate (E) from lead oxide manufacturing facility shall be computed for each run using the following equation:

$$E = \left(\sum_{i=1}^{M} C_{Pbi} Q_{sdi} \right) / (PK)$$

where:
E=emission rate of lead, mg/kg (lb/ton) of lead charged.
C_{Pbi}=concentration of lead from emission point ''i,'' mg/dscm.
Q_{sdi}=volumetric flow rate of effluent gas from emission point ''i,'' dscm/hr (sdcf/hr).
M=number of emission points in the affected facility.
P=lead feed rate to the facility, kg/hr (ton/hr).
K=conversion factor, 1.0 mg/mg (453,600 mg/lb).

(2) Method 12 shall be used to determine the lead concentration (C_{Pb}) and the volumetric flow rate (Q_{sd}) of the effluent gas. The sampling time and sample volume for each run shall be at least 60 minutes and 0.85 dscm (30 dscf).

(3) The average lead feed rate (P) shall be determined for each run using the following equation:

$$P = N\,W/\Theta$$

where:
N=number of lead pigs (ingots) charged.
W=average mass of a pig, kg (ton).
Θ=duration of run, hr.

[54 FR 6675, Feb. 14, 1989]

Subpart LL—Standards of Performance for Metallic Mineral Processing Plants

SOURCE: 49 FR 6464, Feb. 21, 1984, unless otherwise noted.

§ 60.380 Applicability and designation of affected facility.

(a) The provisions of this subpart are applicable to the following affected facilities in metallic mineral processing plants: Each crusher and screen in open-pit mines; each crusher, screen, bucket elevator, conveyor belt transfer point, thermal dryer, product packaging station, storage bin, enclosed storage area, truck loading station, truck unloading station, railcar loading station, and railcar unloading station at the mill or concentrator with the following exceptions. All facilities located in underground mines are exempted from the provisions of this subpart. At uranium ore processing plants, all facilities subsequent to and including the beneficiation of uranium ore are exempted from the provisions of this subpart.

(b) An affected facility under paragraph (a) of this section that commences construction or modification after August 24, 1982, is subject to the requirements of this part.

§ 60.381 Definitions.

All terms used in this subpart, but not specifically defined in this section, shall have the meaning given them in the Act and in subpart A of this part.

Bucket elevator means a conveying device for metallic minerals consisting of a head and foot assembly that supports and drives an endless single or double strand chain or belt to which buckets are attached.

Capture system means the equipment used to capture and transport particulate matter generated by one or more affected facilities to a control device.

Control device means the air pollution control equipment used to reduce particulate matter emissions released to the atmosphere from one or more affected facilities at a metallic mineral processing plant.

Conveyor belt transfer point means a point in the conveying operation where the metallic mineral or metallic mineral concentrate is transferred to or from a conveyor belt except where the metallic mineral is being transferred to a stockpile.

Crusher means a machine used to crush any metallic mineral and includes feeders or conveyors located immediately below the crushing surfaces. Crushers include, but are not limited to, the following types: jaw, gyratory, cone, and hammermill.

Enclosed storage area means any area covered by a roof under which metallic minerals are stored prior to further processing or loading.

Metallic mineral concentrate means a material containing metallic compounds in concentrations higher than naturally occurring in ore but requiring additional processing if pure metal is to be isolated. A metallic mineral concentrate contains at least one of the following metals in any of its oxidation states and at a concentration that contributes to the concentrate's commercial value: Aluminum, copper, gold, iron, lead, molybdenum, silver, titanium, tungsten, uranium, zinc, and zirconium. This definition shall not be construed as requiring that material containing metallic compounds be refined to a pure metal in order for the material to be considered a metallic mineral concentrate to be covered by the standards.

Metallic mineral processing plant means any combination of equipment that produces metallic mineral concentrates from ore. Metallic mineral processing commences with the mining of ore and includes all operations either up to and including the loading of wet or dry concentrates or solutions of metallic minerals for transfer to facilities at non-adjacent locations that will subsequently process metallic concentrates into purified metals (or other products), or up to and including all material transfer and storage operations that precede the operations that produce refined metals (or other products) from metallic mineral concentrates at facilities adjacent to the metallic mineral processing plant. This definition shall not be construed as requiring that mining of ore be conducted in order for the combination of equipment to be considered a metallic mineral processing plant. (See also the definition of *metallic mineral concentrate*.)

Process fugitive emissions means particulate matter emissions from an affected facility that are not collected by a capture system.

Product packaging station means the equipment used to fill containers with metallic compounds or metallic mineral concentrates.

Railcar loading station means that portion of a metallic mineral processing plant where metallic minerals or metallic mineral concentrates are loaded by a conveying system into railcars.

Railcar unloading station means that portion of a metallic mineral processing plant where metallic ore is unloaded from a railcar into a hopper, screen, or crusher.

Screen means a device for separating material according to size by passing undersize material through one or more mesh surfaces (screens) in series and retaining oversize material on the mesh surfaces (screens).

Stack emissions means the particulate matter captured and released to the atmosphere through a stack, chimney, or flue.

Storage bin means a facility for storage (including surge bins and hoppers) or metallic minerals prior to further processing or loading.

Surface moisture means water that is not chemically bound to a metallic mineral or metallic mineral concentrate.

Thermal dryer means a unit in which the surface moisture content of a metallic mineral or a metallic mineral concentrate is reduced by direct or indirect contact with a heated gas stream.

Truck loading station means that portion of a metallic mineral processing plant where metallic minerals or metallic mineral concentrates are loaded by a conveying system into trucks.

Truck unloading station means that portion of a metallic mineral processing plant where metallic ore is unloaded from a truck into a hopper, screen, or crusher.

§ 60.382 Standard for particulate matter.

(a) On and after the date on which the performance test required to be conducted by §60.8 is completed, no owner or operator subject to the provisions of this subpart shall cause to be

discharged into the atmosphere from an affected facility any stack emissions that:

(1) Contain particulate matter in excess of 0.05 grams per dry standard cubic meter.

(2) Exhibit greater than 7 percent opacity, unless the stack emissions are discharged from an affected facility using a wet scrubbing emission control device.

(b) On and after the sixtieth day after achieving the maximum production rate at which the affected facility will be operated, but not later than 180 days after initial startup, no owner or operator subject to the provisions of this subpart shall cause to be discharged into the atmosphere from an affected facility any process fugitive emissions that exhibit greater than 10 percent opacity.

§ 60.383 Reconstruction.

(a) The cost of replacement of ore-contact surfaces on processing equipment shall not be considered in calculating either the ''fixed capital cost of the new components'' or the ''fixed capital cost that would be required to construct a comparable new facility'' under § 60.15. Ore-contact surfaces are: Crushing surfaces; screen meshes, bars, and plates; conveyor belts; elevator buckets; and pan feeders.

(b) Under § 60.15, the ''fixed capital cost of the new components'' includes the fixed capital cost of all depreciable components (except components specified in paragraph (a) of this section) that are or will be replaced pursuant to all continuous programs of component replacement commenced within any 2-year period following August 24, 1982.

§ 60.384 Monitoring of operations.

(a) The owner or operator subject to the provisions of this subpart shall install, calibrate, maintain, and operate a monitoring device for the continuous measurement of the change in pressure of the gas stream through the scrubber for any affected facility using a wet scrubbing emission control device. The monitoring device must be certified by the manufacturer to be accurate within ±250 pascals (±1 inch water) gauge pressure and must be calibrated on an annual basis in accordance with manufacturer's instructions.

(b) The owner or operator subject to the provisions of this subpart shall install, calibrate, maintain, and operate a monitoring device for the continuous measurement of the scrubbing liquid flow rate to a wet scrubber for any affected facility using any type of wet scrubbing emission control device. The monitoring device must be certified by the manufacturer to be accurate within ±5 percent of design scrubbing liquid flow rate and must be calibrated on at least an annual basis in accordance with manufacturer's instructions.

§ 60.385 Recordkeeping and reporting requirements.

(a) The owner or operator subject to the provisions of this subpart shall conduct a performance test and submit to the Administrator a written report of the results of the test as specified in § 60.8(a).

(b) During the initial performance test of a wet scrubber, and at least weekly thereafter, the owner or operator shall record the measurements of both the change in pressure of the gas stream across the scrubber and the scrubbing liquid flow rate.

(c) After the initial performance test of a wet scrubber, the owner or operator shall submit semiannual reports to the Administrator of occurrences when the measurements of the scrubber pressure loss (or gain) and liquid flow rate differ by more than ±30 percent from the average obtained during the most recent performance test.

(d) The reports required under paragraph (c) shall be postmarked within 30 days following the end of the second and fourth calendar quarters.

(e) The requirements of this subsection remain in force until and unless the Agency, in delegating enforcement authority to a State under section 111(c) of the Act, approves reporting requirements or an alternative means of compliance surveillance adopted by such States. In that event, affected sources within the State will be relieved of the obligation to comply with this subsection, provided that

they comply with requirements established by the State.

[49 FR 6464, Feb. 21, 1984, as amended at 54 FR 6676, Feb. 14, 1989]

§ 60.386 Test methods and procedures.

(a) In conducting the performance tests required in § 60.8, the owner or operator shall use as reference methods and procedures the test methods in appendix A of this part or other methods and procedures as specified in this section, except as provided in § 60.8(b).

(b) The owner or operator shall determine complance with the particulate matter standards § 60.382 as follows:

(1) Method 5 or 17 shall be used to determine the particulate matter concentration. The sample volume for each run shall be at least 1.70 dscm (60 dscf). The sampling probe and filter holder of Method 5 may be operated without heaters if the gas stream being sampled is at ambient temperature. For gas streams above ambient temperature, the Method 5 sampling train shall be operated with a probe and filter temperature slightly above the effluent temperature (up to a maximum filter temperature of 121°C (250 °F)) in order to prevent water condensation on the filter.

(2) Method 9 and the procedures in § 60.11 shall be used to determine opacity from stack emissions and process fugitive emissions. The observer shall read opacity only when emissions are clearly identified as emanating solely from the affected facility being observed.

(c) To comply with § 60.385(c), the owner or operator shall use the monitoring devices in § 60.3284(a) and (b) to determine the pressure loss of the gas stream through the scrubber and scrubbing liquid flow rate at any time during each particulate matter run, and the average of the three determinations shall be computed.

[54 FR 6676, Feb. 14, 1989]

Subpart MM—Standards of Performance for Automobile and Light Duty Truck Surface Coating Operations

SOURCE: 45 FR 85415, Dec. 24, 1980, unless otherwise noted.

§ 60.390 Applicability and designation of affected facility.

(a) The provisions of this subpart apply to the following affected facilities in an automobile or light-duty truck assembly plant: each prime coat operation, each guide coat operation, and each topcoat operation.

(b) Exempted from the provisions of this subpart are operations used to coat plastic body components or all-plastic automobile or light-duty truck bodies on separate coating lines. The attachment of plastic body parts to a metal body before the body is coated does not cause the metal body coating operation to be exempted.

(c) The provisions of this subpart apply to any affected facility identified in paragraph (a) of this section that begins construction, reconstruction, or modification after October 5, 1979.

§ 60.391 Definitions.

(a) All terms used in this subpart that are not defined below have the meaning given to them in the Act and in subpart A of this part.

Applied coating solids means the volume of dried or cured coating solids which is deposited and remains on the surface of the automobile or light-duty truck body.

Automobile means a motor vehicle capable of carrying no more than 12 passengers.

Automobile and light-duty truck body means the exterior surface of an automobile or light-duty truck including hoods, fenders, cargo boxes, doors, and grill opening panels.

Bake oven means a device that uses heat to dry or cure coatings.

Electrodeposition (EDP) means a method of applying a prime coat by which the automobile or light-duty truck body is submerged in a tank filled with coating material and an electrical field is used to effect the deposition of the coating material on the body.

Electrostatic spray application means a spray application method that uses an electrical potential to increase the transfer efficiency of the coating solids. Electrostatic spray application can be used for prime coat, guide coat, or topcoat operations.

Flash-off area means the structure on automobile and light-duty truck assembly lines between the coating application system (dip tank or spray booth) and the bake oven.

Guide coat operation means the guide coat spray booth, flash-off area and bake oven(s) which are used to apply and dry or cure a surface coating between the prime coat and topcoat operation on the components of automobile and light-duty truck bodies.

Light-duty truck means any motor vehicle rated at 3,850 kilograms gross vehicle weight or less, designed mainly to transport property.

Plastic body means an automobile or light-duty truck body constructed of synthetic organic material.

Plastic body component means any component of an automobile or light-duty truck exterior surface constructed of synthetic organic material.

Prime coat operation means the prime coat spray booth or dip tank, flash-off area, and bake oven(s) which are used to apply and dry or cure the initial coating on components of automobile or light-duty truck bodies.

Purge or *line purge* means the coating material expelled from the spray system when clearing it.

Solids Turnover Ratio (R_T) means the ratio of total volume of coating solids that is added to the EDP system in a calendar month divided by the total volume design capacity of the EDP system.

Solvent-borne means a coating which contains five percent or less water by weight in its volatile fraction.

Spray application means a method of applying coatings by atomizing the coating material and directing the atomized material toward the part to be coated. Spray applications can be used for prime coat, guide coat, and topcoat operations.

Spray booth means a structure housing automatic or manual spray application equipment where prime coat, guide coat, or topcoat is applied to components of automobile or light-duty truck bodies.

Surface coating operation means any prime coat, guide coat, or topcoat operation on an automobile or light-duty truck surface coating line.

Topcoat operation means the topcoat spray booth, flash-off area, and bake oven(s) which are used to apply and dry or cure the final coating(s) on components of automobile and light-duty truck bodies.

Transfer efficiency means the ratio of the amount of coating solids transferred onto the surface of a part or product to the total amount of coating solids used.

VOC content means all volatile organic compounds that are in a coating expressed as kilograms of VOC per liter of coating solids.

Volume Design Capacity of EDP System (LE) means the total liquid volume that is contained in the EDP system (tank, pumps, recirculating lines, filters, etc.) at its designed liquid operating level.

Waterborne or *water reducible* means a coating which contains more than five weight percent water in its volatile fraction.

(b) The nomenclature used in this subpart has the following meanings:

C_{aj}=concentration of VOC (as carbon) in the effluent gas flowing through stack (j) leaving the control device (parts per million by volume),

C_{bi}=concentration of VOC (as carbon) in the effluent gas flowing through stack (i) entering the control device (parts per million by volume),

C_{fk}=concentration of VOC (as carbon) in the effluent gas flowing through exhaust stack (k) not entering the control device (parts per million by volume),

D_{ci}=density of each coating (i) as received (kilograms per liter),

D_{dj}=density of each type VOC dilution solvent (j) added to the coatings, as received (kilograms per liter),

D_r=density of VOC recovered from an affected facility (kilograms per liter),

E=VOC destruction efficiency of the control device,

F=fraction of total VOC which is emitted by an affected facility that enters the control device,

G=volume weighted average mass of VOC per volume of applied solids (kilograms per liter),

L_{ci}=volume of each coating (i) consumed, as received (liters),

L_{ci}*ll*=volume of each coating (i) consumed by each application method (l), as received liters),

L_{dj}=volume of each type VOC dilution solvent (j) added to the coatings, as received (liters),

L_r=volume of VOC recovered from an affected facility (liters),

L_s=volume of solids in coatings consumed (liters),

L_E=the total volume of the EDP system (liters),

M_d=total mass of VOC in dilution solvent (kilograms),

M_0=total mass of VOC in coatings as received (kilograms),

M_r=total mass of VOC recovered from an affected facility (kilograms),

N=volume weighted average mass of VOC per volume of applied coating solids after the control device

$$\frac{\text{kilograms of VOC}}{\text{liter of applied solids}},$$

Q_{aj}=volumetric flow rate of the effluent gas flowing through stack (j) leaving the control device (dry standard cubic meters per hour),

Q_{bi}=volumetric flow rate of the effluent gas flowing through stack (i) entering the control device (dry standard cubic meters per hour),

Q_{fk}=volumetric flow rate of the effluent gas flowing through exhaust stack (k) not entering the control device (dry standard cubic meters per hour),

T=overall transfer efficiency,

T_l=transfer efficiency for application method (*l*),

V_{si}=proportion of solids by volume in each coating (i) as received

$$\frac{\text{liter solids}}{\text{liter coating}}, \text{ and}$$

W_{oi}=proportion of VOC by weight in each coating (i), as received

$$\frac{\text{kilograms VOC}}{\text{kilograms coating}}$$

[45 FR 85415, Dec. 24, 1980, as amended at 59 FR 51386, Oct. 11, 1994]

§ 60.392 Standards for volatile organic compounds

On and after the date on which the initial performance test required by § 60.8 is completed, no owner or operator subject to the provisions of this subpart shall discharge or cause the discharge into the atmosphere from any affected facility VOC emissions in excess of:

(a) Prime Coat Operation. (1) For each EDP prime coat operation:

(i) 0.17 kilogram of VOC per liter of applied coating solids when R_T is 0.16 or greater.

(ii) 0.17 x 350 ($^{0.160-R_T}$) kg of VOC per liter of applied coating solids when R_T is greater than or equal to 0.040 and less than 0.160.

(iii) When R_T is less than 0.040, there is no emission limit.

(2) For each nonelectrodeposition prime coat operation: 0.17 kilogram of VOC per liter of applied coating solids.

(b) 1.40 kilograms of VOC per liter of applied coating solids from each guide coat operation.

(c) 1.47 kilograms of VOC per liter of applied coating solids from each topcoat operation.

[45 FR 85415, Dec. 24, 1980, as amended at 59 FR 51386, Oct. 11, 1994]

§ 60.393 Performance test and compliance provisions.

(a) Section 60.8 (d) and (f) do not apply to the performance test procedures required by this section.

(b) The owner or operator of an affected facility shall conduct an initial performance test in accordance with § 60.8(a) and thereafter for each calendar month for each affected facility according to the procedures in this section.

(c) The owner or operator shall use the following procedures for determining the monthly volume weighted average mass of VOC emitted per volume of applied coating solids.

(1) The owner or operator shall use the following procedures for each affected facility which does not use a capture system and a control device to comply with the applicable emission limit specified under § 60.392.

(i) Calculate the volume weighted average mass of VOC per volume of applied coating solids for each calendar month for each affected facility. The owner or operator shall determine the composition of the coatings by formulation data supplied by the manufacturer of the coating or from data determined by an analysis of each coating, as received, by Reference Method 24. The Administrator may require the owner or operator who uses formulation data supplied by the manufacturer of the coating to determine data used in the calculation of the VOC content

of coatings by Reference Method 24 or an equivalent or alternative method. The owner or operator shall determine from company records on a monthly basis the volume of coating consumed, as received, and the mass of solvent used for thinning purposes. The volume weighted average of the total mass of VOC per volume of coating solids used each calendar month will be determined by the following procedures.

(A) Calculate the mass of VOC used in each calendar month for each affected facility by the following equation where ''n'' is the total number of coatings used and ''m'' is the total number of VOC solvents used:

$$M_o + M_d = \sum_{i=1}^{n} L_{ci} D_{ci} W_{oi} + \sum_{j=1}^{m} L_{dj} D_{dj}$$

[$\Sigma L_{dj} D_{dj}$ will be zero if no VOC solvent is added to the coatings, as received].

(B) Calculate the total volume of coating solids used in each calendar month for each affected facility by the following equation where ''n'' is the total number of coatings used:

$$L_s = \sum_{i=1}^{n} L_{ci} V_{si}$$

(C) Select the appropriate transfer efficiency (T) from the following tables for each surface coating operation:

Application method	Transfer efficiency
Air Atomized Spray (waterborne coating)	0.39
Air Atomized Spray (solvent-borne coating)	0.50
Manual Electrostatic Spray	0.75
Automatic Electrostatic Spray	0.95
Electrodeposition	1.00

The values in the table above represent an overall system efficiency which includes a total capture of purge. If a spray system uses line purging after each vehicle and does not collect any of the purge material, the following table shall be used:

Application method	Transfer efficiency
Air Atomized Spray (waterborne coating)	0.30
Air Atomized Spray (solvent-borne coating)	0.40
Manual Electrostatic Spray	0.62
Automatic Electrostatic Spray	0.75

If the owner or operator can justify to the Administrator's satisfaction that other values for transfer efficiencies are appropriate, the Administrator will approve their use on a case-by-case basis.

(*1*) When more than one application method (*l*) is used on an individual surface coating operation, the owner or operator shall perform an analysis to determine an average transfer efficiency by the following equation where ''n'' is the total number of coatings used and ''p'' is the total number of application methods:

$$T = \frac{\sum_{i=1}^{n} T_l V_{si} L_{cil}}{\sum_{l=1}^{p} L_s}$$

(D) Calculate the volume weighted average mass of VOC per volume of applied coating solids (G) during each calendar month for each affected facility by the following equation:

$$G = \frac{M_o + M_d}{L_s T}$$

(E) For each EDP prime coat operation, calculate the turnover ratio (R_T) by the following equation:

$$R_T = \frac{L_S}{L_E}, \text{ truncated after 3 decimal places.}$$

Then calculate or select the appropriate limit according to § 60.392(a).

(ii) If the volume weighted average mass of VOC per volume of applied coating solids (G), calculated on a calendar month basis, is less than or equal to the applicable emission limit specified in § 60.392, the affected facility is in

compliance. Each monthly calculation is a performance test for the purpose of this subpart.

(2) The owner or operator shall use the following procedures for each affected facility which uses a capture system and a control device that destroys VOC (e.g., incinerator) to comply with the applicable emission limit specified under § 60.392.

(i) Calculate the volume weighted average mass of VOC per volume of applied coating solids (G) during each calendar month for each affected facility as described under § 60.393(c)(1)(i).

(ii) Calculate the volume weighted average mass of VOC per volume of applied solids emitted after the control device, by the following equation: N=G[1–FE]

(A) Determine the fraction of total VOC which is emitted by an affected facility that enters the control device by using the following equation where ''n'' is the total number of stacks entering the control device and ''p'' is the total number of stacks not connected to the control device:

$$F = \frac{\sum_{i=1}^{n} Q_{bi} C_{bi}}{\sum_{1=1}^{n} Q_{bi} C_{bi} + \sum_{k=1}^{p} Q_{fk} C_{fk}}$$

If the owner can justify to the Administrator's satisfaction that another method will give comparable results, the Administrator will approve its use on a case-by-case basis.

(*1*) In subsequent months, the owner or operator shall use the most recently determined capture fraction for the performance test.

(B) Determines the destruction efficiency of the control device using values of the volumetric flow rate of the gas streams and the VOC content (as carbon) of each of the gas streams in and out of the device by the following equation where ''n'' is the total number of stacks entering the control device and ''m'' is the total number of stacks leaving the control device:

$$E = \frac{\sum_{i=1}^{n} Q_{bi} C_{bi} - \sum_{j=1}^{m} Q_{aj} C_{aj}}{\sum_{i=1}^{n} Q_{bi} C_{bi}}$$

(*1*) In subsequent months, the owner or operator shall use the most recently determined VOC destruction efficiency for the performance test.

(C) If an emission control device controls the emissions from more than one affected facility, the owner or operator shall measure the VOC concentration (C_{bi}) in the effluent gas entering the control device (in parts per million by volume) and the volumetric flow rate (Q_{bi}) of the effluent gas (in dry standard cubic meters per hour) entering the device through each stack. The destruction or removal efficiency determined using these data shall be applied to each affected facility served by the control device.

(iii) If the volume weighted average mass of VOC per volume of applied solids emitted after the control device (N) calculated on a calendar month basis is less than or equal to the applicable emission limit specified in § 60.392, the affected facility is in compliance. Each monthly calculation is a performance test for the purposes of this subpart.

(3) The owner or operator shall use the following procedures for each affected facility which uses a capture system and a control device that recovers the VOC (e.g., carbon adsorber) to comply with the applicable emission limit specified under § 60.392.

(i) Calculate the mass of VOC (M_o+M_d) used during each calendar month for each affected facility as described under § 60.393(c)(1)(i).

(ii) Calculate the total volume of coating solids (L_s) used in each calendar month for each affected facility as described under § 60.393(c)(1)(i).

(iii) Calculate the mass of VOC recovered (M_r) each calendar month for each affected facility by the following equation: $M_r=L_r D_r$

(iv) Calculate the volume weighted average mass of VOC per volume of applied coating solids emitted after the

control device during a calendar month by the following equation:

$$N = \frac{M_o + M_d - M_r}{L_s T}$$

(v) If the volume weighted average mass of VOC per volume of applied solids emitted after the control device (N) calculated on a calendar month basis is less than or equal to the applicable emission limit specified in §60.392, the affected facility is in compliance. Each monthly calculation is a performance test for the purposes of this subpart.

[45 FR 85415, Dec. 24, 1980, as amended at 59 FR 51387, Oct. 11, 1994]

§60.394 Monitoring of emissions and operations.

The owner or operator of an affected facility which uses an incinerator to comply with the emission limits specified under §60.392 shall install, calibrate, maintain, and operate temperature measurement devices as prescribed below:

(a) Where thermal incineration is used, a temperature measurement device shall be installed in the firebox. Where catalytic incineration is used, a temperature measurement device shall be installed in the gas stream immediately before and after the catalyst bed.

(b) Each temperature measurement device shall be installed, calibrated, and maintained according to accepted practice and the manufacturer's specifications. The device shall have an accuracy of the greater of ±0.75 percent of the temperature being measured expressed in degrees Celsius or ±2.5 °C.

(c) Each temperature measurement device shall be equipped with a recording device so that a permanent record is produced.

§60.395 Reporting and recordkeeping requirements.

(a) Each owner or operator of an affected facility shall include the data outlined in paragraphs (a)(1) and (2) in the initial compliance report required by §60.8.

(1) The owner or operator shall report the volume weighted average mass of VOC per volume of applied coating solids for each affected facility.

(2) Where compliance is achieved through the use of incineration, the owner or operator shall include the following additional data in the control device initial performance test requried by §60.8(a) or subsequent performance tests at which destruction efficiency is determined: the combustion temperature (or the gas temperature upstream and downstream of the catalyst bed), the total mass of VOC per volume of applied coating solids before and after the incinerator, capture efficiency, the destruction efficiency of the incinerator used to attain compliance with the applicable emission limit specified in §60.392 and a description of the method used to establish the fraction of VOC captured and sent to the control device.

(b) Following the initial performance test, the owner or operator of an affected facility shall identify, record, and submit a written report to the Administrator every calendar quarter of each instance in which the volume-weighted average of the total mass of VOC's emitted to the atmosphere per volume of applied coating solids (N) is greater than the limit specified under §60.392. If no such instances have occurred during a particular quarter, a report stating this shall be submitted to the Administrator semiannually. Where compliance is achieved through the use of a capture system and control device, the volume-weighted average after the control device should be reported.

(c) Where compliance with §60.392 is achieved through the use of incineration, the owner or operator shall continuously record the incinerator combustion temperature during coating operations for thermal incineration or the gas temperature upstream and downstream of the incinerator catalyst bed during coating operations for catalytic incineration. The owner or operator shall submit a written report at the frequency specified in §60.7(c) and as defined below.

(1) For thermal incinerators, every three-hour period shall be reported during which the average temperature measured is more than 28 °C less than the average temperature during the

most recent control device performance test at which the destruction efficiency was determined as specified under § 60.393.

(2) For catalytic incinerators, every three-hour period shall be reported during which the average temperature immediately before the catalyst bed, when the coating system is operational, is more than 28 °C less than the average temperature immediately before the catalyst bed during the most recent control device performance test at which destruction efficiency was determined as specified under § 60.393. In addition, every three-hour period shall be reported each quarter during which the average temperature difference across the catalyst bed when the coating system is operational is less than 80 percent of the average temperature difference of the device during the most recent control device performance test at which destruction efficiency was determined as specified under § 60.393.

(3) For thermal and catalytic incinerators, if no such periods occur, the owner or operator shall submit a negative report.

(d) The owner or operator shall notify the Administrator 30 days in advance of any test by Reference Method 25.

[45 FR 85415, Dec. 24, 1980, as amended at 55 FR 51383, Dec. 13, 1990]

§ 60.396 Reference methods and procedures.

(a) The reference methods in appendix A to this part, except as provided in § 60.8 shall be used to conduct performance tests.

(1) Reference Method 24 or an equivalent or alternative method approved by the Administrator shall be used for the determination of the data used in the calculation of the VOC content of the coatings used for each affected facility. Manufacturers' formulation data is approved by the Administrator as an alternative method to Method 24. In the event of dispute, Reference Method 24 shall be the referee method.

(2) Reference Method 25 or an equivalent or alternative method approved by the Administrator shall be used for the determination of the VOC concentration in the effluent gas entering and leaving the emission control device for each stack equipped with an emission control device and in the effluent gas leaving each stack not equipped with a control device.

(3) The following methods shall be used to determine the volumetric flow rate in the effluent gas in a stack:

(i) Method 1 for sample and velocity traverses,

(ii) Method 2 for velocity and volumetric flow rate,

(iii) Method 3 for gas analysis, and

(iv) Method 4 for stack gas moisture.

(b) For Reference Method 24, the coating sample must be a 1-liter sample taken in a 1-liter container.

(c) For Reference Method 25, the sampling time for each of three runs must be at least one hour. The minimum sample volume must be 0.003 dscm except that shorter sampling times or smaller volumes, when necessitated by process variables or other factors, may be approved by the Administrator. The Administrator will approve the sampling of representative stacks on a case-by-case basis if the owner or operator can demonstrate to the satisfaction of the Administrator that the testing of representative stacks would yield results comparable to those that would be obtained by testing all stacks.

§ 60.397 Modifications.

The following physical or operational changes are not, by themselves, considered modifications of existing facilities:

(a) Changes as a result of model year changeovers or switches to larger cars.

(b) Changes in the application of the coatings to increase coating film thickness.

§ 60.398 Innovative technology waivers.

(a) *General Motors Corporation, Wentzville, Missouri, automobile assembly plant.* (1) Pursuant to section 111(j) of the Clean Air Act, 42 U.S.C. 7411(j), each topcoat operation at General Motors Corporation automobile assembly plant located in Wentzville, Missouri, shall comply with the following conditions:

(i) The General Motors Corporation shall obtain the necessary permits as

required by section 173 of the Clean Air Act, as amended August 1977, to operate the Wentzville assembly plant.

(ii) Commencing on February 4, 1983, and continuing to December 31, 1986, or until the base coat/clear coat topcoat system that can achieve the standard specified in 40 CFR 60.392(c) (Dec. 24, 1980) is demonstrated to the Administrator's satisfaction the General Motors Corporation shall limit the discharge of VOC emissions to the atmosphere from each topcoat operation at the Wentzville, Missouri, assembly plant, to either:

(A) 1.9 kilograms of VOC per liter of applied coating solids from base coat/clear coat topcoats, and 1.47 kilograms of VOC per liter of applied coating solids from all other topcoat coatings; or

(B) 1.47 kilograms of VOC per liter of applied coating solids from all topcoat coatings.

(iii) Commencing on the day after the expiration of the period described in paragraph (a)(1)(ii) of this section, and continuing thereafter, emissions of VOC from each topcoat operations shall not exceed 1.47 kilograms of VOC per liter of applied coating solids as specified in 40 CFR 60.392(c) (Dec. 24, 1980).

(iv) Each topcoat operation shall comply with the provisions of §§ 60.393, 60.394, 60.395, 60.396, and 60.397. Separate calculations shall be made for base coat/clear coat coatings and all other topcoat coatings when necessary to demonstrate compliance with the emission limits in paragraph (a)(1)(ii)(A) of this section.

(v) A technology development report shall be sent to EPA Region VII, 324 East 11th Street, Kansas City, MO 64106, postmarked before 60 days after the promulgation of this waiver and annually thereafter while this waiver is in effect. The technology development report shall summarize the base coat/clear coat development work including the results of exposure and endurance tests of the various coatings being evaluated. The report shall include an updated schedule of attainment of 40 CFR 60.392(c) (Dec. 24, 1980) based on the most current information.

(2) This waiver shall be a federally promulgated standard of performance. As such, it shall be unlawful for General Motors Corporation to operate a topcoat operation in violation of the requirements established in this waiver. Violation of the terms and conditions of this waiver shall subject the General Motors Corporation to enforcement under section 113 (b) and (c), 42 U.S.C. 7412 (b) and (c), and section 120, 42 U.S.C. 7420, of the Act as well as possible citizen enforcement under section 304 of the Act, 42 U.S.C. 7604.

(b) *General Motors Corporation, Detroit, Michigan, Automobile Assembly plant.* (1) Pursuant to section 111(j) of the Clean Air Act, 42 U.S.C. 7411(j), each topcoat operation at General Motors Corporation's automobile assembly plant located in Detroit, MI, shall comply with the following conditions:

(i) The General Motors Corporation shall obtain the necessary permits as required by section 173 of the Clean Air Act, as amended August 1977, to operate the Detroit assembly plant.

(ii) Commencing on February 4, 1983, and continuing to December 31, 1986, or until the base coat/clear coat topcoat system that can achieve the standard specified in 40 CFR 60.392(c) (Dec. 24, 1980), is demonstrated to the Administrator's satisfaction, the General Motors Corporation shall limit the discharge of VOC emissions to the atmosphere from each topcoat operation at the Detroit, MI, assembly plant, to either:

(A) 1.9 kilograms of VOC per liter of applied coating solids from base coat/clear coat topcoats, and 1.47 kilograms of VOC per liter of applied coating solids from all other topcoat coatings; or

(B) 1.47 kilograms of VOC per liter of applied coating solids from all topcoat coatings.

(iii) Commencing on the day after the expiration of the period described in paragraph (b)(ii) of this section, and continuing thereafter, emissions of VOC from each topcoat operation shall not exceed 1.47 kilograms of VOC per liter of applied coating solids as specified in 40 CFR 60.392(c) (December 24, 1980).

(iv) Each topcoat operation shall comply with the provisions of §§ 60.393, 60.394, 60.395, 60.396, and 60.397. Separate calculations shall be made for base coat/clear coat coatings and all other topcoat coatings when necessary to

demonstrate compliance with the emission limits in paragraph (b)(1)(ii)(A) of this section.

(v) A technology development report shall be sent to EPA Region V, 230 South Dearborn Street, Chicago, IL 60604, postmarked before 60 days after the promulgation of this waiver and annually thereafter while this waiver is in effect. The technology development report shall summarize the base coat/clear coat development work including the results of exposure and endurance tests of the various coatings being evaluated. The report shall include an updated schedule of attainment of 40 CFR 60.392(c) (Dec. 24, 1980) based on the most current information.

(2) This waiver shall be a federally promulgated standard of performance. As such, it shall be unlawful for General Motors Corporation to operate a topcoat operation in violation of the requirements established in this waiver. Violation of the terms and conditions of this waiver shall subject the General Motors Corporation to enforcement under section 113 (b) and (c), 42 U.S.C. 7412 (b) and (c), and section 120, 42 U.S.C. 7420, of the Act as well as possible citizen enforcement under section 304 of the Act, 42 U.S.C. 7604.

(c) *General Motors Corporation, Orion Township, MI, automobile assembly plant.* (1) Pursuant to section 111(j) of the Clean Air Act, 42 U.S.C. 7411(j), each topcoat operation at General Motors Corporation automobile assembly plant located in Orion Township, MI, shall comply with the following conditions:

(i) The General Motors Corporation shall obtain the necessary permits as required by section 173 of the Clean Air Act, as amended August 1977, to operate the Orion Township assembly plant.

(ii) Commencing on February 4, 1983, and continuing to December 31, 1986, or until the base coat/clear coat topcoat system that can achieve the standard specified in 40 CFR 60.392(c) (Dec. 24, 1980) is demonstrated to the Administrator's satisfaction, the General Motors Corporation shall limit the discharge of VOC emissions to the atmosphere from each topcoat operation at the Orion Township, MI, assembly plant, to either:

(A) 1.9 kilograms of VOC per liter of applied coating solids from base coat/clear coat topcoats, and 1.47 kilograms of VOC per liter of applied coating solids from all other topcoat coatings; or

(B) 1.47 kilograms of VOC per liter of applied coating solids from all topcoat coatings.

(iii) Commencing on the day after the expiration of the period described in paragraph (c)(l)(ii) of this section and continuing thereafter, emissions of VOC from each topcoat operation shall not exceed 1.47 kilograms of VOC per liter of applied coating solids as specified in 40 CFR 60.392(c) (Dec. 24, 1980).

(iv) Each topcoat operation shall comply with the provisions of §§ 60.393, 60.394, 60.395, 60.396, and 60.397. Separate calculations shall be made for base coat/clear coat coatings and all other topcoat coatings when necessary to demonstrate compliance with the emission limits in paragraph (c)(l) (ii)(A) of this section.

(v) A technology development report shall be sent to EPA Region V, 230 South Dearborn Street, Chicago, IL 60604, postmarked before 60 days after the promulgation of this waiver and annually thereafter while this waiver is in effect. The technology development report shall summarize the base coat/clear coat development work including the results of exposure and endurance tests of the various coatings being evaluated. The report shall include an updated schedule of attainment of 40 CFR 60.392(c) (December 24, 1980) based on the most current information.

(2) This waiver shall be a federally promulgated standard of performance. As such, it shall be unlawful for General Motors Corporation to operate a topcoat operation in violation of the requirements established in this waiver. Violation of the terms and conditions of this waiver shall subject the General Motors Corporation to enforcement under section 113 (b) and (c), 42 U.S.C. 7412 (b) and (c), and section 120, 42 U.S.C. 7420, of the Act as well as possible citizen enforcement under section 304 of the Act, 42 U.S.C. 7604.

(d) *Honda of America Manufacturing, Incorporated (Honda), Marysville, Ohio, automobile assembly plant.* (1) Pursuant to section 111(j) of the Clean Air Act, 42

U.S.C. 7411(j), each topcoat operation at Honda's automobile assembly plant located in Marysville, OH, shall comply with the following conditions:

(i) Honda shall obtain the necessary permits as required by section 173 of the Clean Air Act, as amended August 1977, to operate the Marysville assembly plant.

(ii) Commencing on February 4, 1983, and continuing for 4 years or to December 31, 1986, whichever is sooner, or until the base coat/clear coat topcoat system that can achieve the standard specified in 40 CFR 60.392(c) (Dec. 24, 1980) is demonstrated to the Administrator's satisfaction, Honda shall limit the discharge of VOC emissions to the atmosphere from each topcoat operation at Marysville, OH, assembly plant, to either:

(A) 3.1 kilograms of VOC per liter of applied coating solids from base coat/clear coat topcoats, and 1.47 kilograms of VOC per liter of applied coating solids from all other topcoat coatings; or

(B) 1.47 kilograms of VOC per liter of applied coating solids from all topcoat coatings.

(iii) Commencing on the day after the expiration of the period described in paragraph (d)(1)(ii) of this section and continuing thereafter, emissions of VOC from each topcoat operation shall not exceed 1.47 kilograms of VOC per liter of applied coating solids as specified in 40 CFR 60.392(c) (December 24, 1980).

(iv) Each topcoat operation shall comply with the provisions of §§ 60.393, 60.394, 60.395, 60.396, and 60.397. Separate calculations shall be made for base coat/clear coat coatings and all other topcoat coatings when necessary to demonstrate compliance with the emission limits in paragraph (d)(1)(ii)(A) of this section.

(v) A technology development report shall be sent to EPA Region V, 230 South Dearborn Street, Chicago, IL 60604, postmarked before 60 days after the promulgation of this waiver and annually thereafter while this waiver is in effect. The technology development report shall summarize the base coat/clear coat development work including the results of exposure and endurance tests of the various coatings being evaluated. The report shall include an updated schedule of attainment of 40 CFR 60.392(c) (Dec. 24, 1980) based on the most current information.

(2) This waiver shall be a federally promulgated standard of performance. As such, it shall be unlawful for Honda to operate a topcoat operation in violation of the requirements established in this waiver. Violation of the terms and conditions of this waiver shall subject Honda to enforcement under section 113(b) and (c), 42 U.S.C. 7412(b) and (c), and section 120, 42 U.S.C. 7420, of the Act as well as possible citizen enforcement under section 304 of the Act, 42 U.S.C. 7604.

(e) *Nissan Motor Manufacturing Corporation, U.S.A. (Nissan), Smyrna, TN, light-duty truck assembly plant.* (1) Pursuant to section 111(j) of the Clean Air Act, 42 U.S.C. 7411(j), each topcoat operation at Nissan's light-duty truck assembly plant located in Smyrna, Tennessee, shall comply with the following conditions:

(i) Nissan shall obtain the necessary permits as required by section 173 of the Clean Air Act, as amended August 1977, to operate the Smyrna assembly plant.

(ii) Commencing on February 4, 1983, and continuing for 4 years or to December 31, 1986, whichever is sooner, or until the base coat/clear coat topcoat system that can achieve the standard specified in 40 CFR 60.392(c) (Dec. 24, 1980), is demonstrated to the Administrator's satisfaction, Nissan shall limit the discharge of VOC emissions to the atmosphere from each topcoat operation at the Smyrna, TN, assembly plant, to either:

(A) 2.3 kilograms of VOC per liter of applied coating solids from base coat/clear coat topcoats, and 1.47 kilograms of VOC per liter of applied coating solids from all other topcoat coatings; or

(B) 1.47 kilograms of VOC per liter of applied coating solids from all topcoat coatings.

(iii) Commencing on the day after the expiration of the period described in paragraph (e)(1)(ii) of this section and continuing thereafter, emissions of VOC from each topcoat operation shall not exceed 1.47 kilograms of VOC per liter of applied coating solids as specified in 40 CFR 60.392(c) (Dec. 24, 1980).

Each topcoat operation shall comply with the provisions of §§ 60.393, 60.394, 60.395, 60.396, and 60.397. Separate calculations shall be made for base coat/clear coat coatings and all other topcoat coatings when necessary to demonstrate compliance with the emission limits in paragraph (e)(1)(ii)(A) of this section.

(f) *Chrysler Corporation, Sterling Heights, MI, automobile assembly plant.* (1) Pursuant to section 111(j) of the Clean Air Act, 42 U.S.C. 7411(j), each topcoat operation at Chrysler Corporation's automobile assembly plant located in Sterling Heights, MI, shall comply with the following conditions:

(i) The Chrysler Corporation shall obtain the necessary permits as required under Parts C and D of the Clean Air Act, as amended August 1977, to operate the Sterling Heights assembly plant.

(ii) Commencing on September 9, 1985, and continuing to December 31, 1986, or until the basecoat/clearcoat (BC/CC) topcoat system that can achieve the standard specified under § 60.392(c) of this subpart is demonstrated to the Administrator's satisfaction, whichever is sooner, the Chrysler Corporation shall limit the discharge of VOC emissions to the atmosphere from each topcoat operation at the Sterling Heights, MI assembly plant, to either:

(A) 1.7 kilograms of VOC per liter of applied coating solids from BC/CC topcoats, and 1.47 kilograms of VOC per liter of applied coating solids from all other topcoat coatings; or

(B) 1.47 kilograms of VOC per liter of applied coating solids from all topcoat coatings.

(iii) Commencing on the day after the expiration of the period described in paragraph (f)(1)(ii) and continuing thereafter, emissions of VOC's from each topcoat operation shall not exceed 1.47 kilograms of VOC per liter of applied coating solids as specified under § 60.392(c) of this subpart.

(iv) Each topcoat operation shall comply with the provisions of §§ 60.393, 60.394, 60.395, 60.396, and 60.397. Separate calculations shall be made for BC/CC coatings and all other topcoat coatings when necessary to demonstrate compliance with the emission limits specified under paragraph (f)(1)(ii)(A) of this section.

(v) A technology development report shall be sent to EPA Region V, 230 South Dearborn Street, Chicago, IL 60604, postmarked before 60 days after the promulgation of this waiver and annually thereafter while this waiver is in effect. A copy of this report shall be sent to Director, Emission Standards and Engineering Division, U.S. Environmental Protection Agency, MD–13, Research Triangle Park, NC 27711. The technology development report shall summarize the BC/CC development work including the results of exposure and endurance tests of the various coatings being evaluated. The report shall include an updated schedule of attainment of § 60.392(c) of this subpart, based on the most current information.

(2) This waiver shall be a federally promulgated standard of performance. As such, it shall be unlawful for the Chrysler Corporation to operate a topcoat operation in violation of the requirements established in this waiver. Violation of the terms and conditions of this waiver shall subject the Chrysler Corporation to enforcement under sections 113 (b) and (c) of the Act (42 U.S.C. 7412 (b) and (c)) and under section 120 of the Act (42 U.S.C. 7420), as well as possible citizen enforcement under section 304 of the Act (42 U.S.C. 7604).

(3) This waiver shall not be construed to constrain the State of Michigan from imposing upon the Chrysler Corporation any emission reduction requirement at Chrysler's Sterling Heights automobile assembly plant necessary for the maintenance of reasonable further progress or the attainment of the national ambient air quality standard for ozone or the maintenance of the national ambient air quality standard for ozone. Furthermore, this waiver shall not be construed as granting any exemptions from the applicability, enforcement, or other provisions of any other standards that apply or may apply to topcoat operations or any other operations at this automobile assembly plant.

(g) *Ford Motor Company, Hapeville, GA, automotive assemply plant.* (1) Pursuant to section 111(j) of the Clean Air

Act, 42 U.S.C. 7411(j), each topcoat operation at Ford Motor Company's automobile assembly plant located in Hapeville, GA, shall comply with the following conditions:

(i) The Ford Motor Company shall obtain the necessary permits as required under parts C and D of the Clean Air Act, as amended August 1977, to operate the Hapeville assembly plant.

(ii) Commencing on September 9, 1985, and continuing to December 31, 1986, or until the basecoat/clearcoat (BC/CC) topcoat system that can achieve the standard specified under §60.392(c) of this subpart is demonstrated to the Administrator's satisfaction, whichever is sooner, the Ford Motor Company shall limit the discharge of VOC emissions to the atmosphere from each topcoat operation at the Hapeville, GA, assembly plant, to either:

(A) 2.6 kilograms of VOC per liter of applied coating solids from BC/CC topcoats, and 1.47 kilograms of VOC per liter of applied coating solids from all other topcoat coatings; or

(B) 1.47 kilograms of VOC per liter of applied coating solids from all topcoat coatings.

(iii) Commencing on the day after the expiration of the period described in paragraph (g)(1)(ii) and continuing thereafter, emissions of VOC's from each topcoat operation shall not exceed 1.47 kilograms of VOC per liter of applied coating solids as specified under §60.392(c) of this subpart.

(iv) Each topcoat operation shall comply with the provisions of §§60.393, 60.394, 60.395, 60.396, and 60.397. Separate calculations shall be made for BC/CC coatings and all other topcoat coatings when necessary to demonstrate compliance with the emission limits specified under paragraph (g)(1)(ii)(A) of this section.

(v) A technology development report shall be sent to EPA Region IV, 345 Courtland Street, NE., Atlanta, GA 30365, postmarked before 60 days after the promulgation of this waiver and annually thereafter while this waiver is in effect. A copy of this report shall be sent to Director, Emission Standards and Engineering Division, U.S. Environmental Protection Agency, MD–13, Research Triangle Park, NC 27711. The technology development report shall summarize the BC/CC development work including the results of exposure and endurance tests of the various coatings being evaluated. The report shall include an updated schedule of attainment of §60.392(c) of this subpart, based on the most current information.

(2) This waiver shall be a federally promulgated standard of performance. As such, it shall be unlawful for the Ford Motor Company to operate a topcoat operation in violation of the requirements established in this waiver. Violation of the terms and conditions of this waiver shall subject the Ford Motor Company to enforcement under section 113 (b) and (c) and the Act (42 U.S.C. 7412 (b) and (c)) and under section 120 of the Act (42 U.S.C. 7420), as well as possible citizen enforcement under section 304 of the Act (42 U.S.C. 7604).

(3) This waiver shall not be construed to constrain the State of Georgia from imposing upon the Ford Motor Corporation any emission reduction requirement at Ford's Hapeville automobile assembly plant necessary for the maintenance of reasonable further progress or the attainment of the national ambient air quality standard for ozone or the maintenance of the national ambient air quality standard for ozone. Furthermore, this waiver shall not be construed as granting any exemptions from the applicability, enforcement, or other provisions of any other standards that apply or may apply to topcoat operations or any other operations at this automobile assembly plant.

(h) *Ford Motor Company, St. Paul, MN, light-duty truck assembly plant.* (1) Pursuant to section 111(j) of the Clean Air Act, 42 U.S.C. 7411(j), each topcoat operation at Ford Motor Company's automobile assembly plant located in St. Paul, MN, shall comply with the following conditions:

(i) The Ford Motor Company shall obtain the necessary permits as required under parts C and D of the Clean Air Act, as amended August 1977, to operate the St. Paul assembly plant.

(ii) Commencing on September 9, 1985, and continuing to December 31, 1986, or until the basecoat/clearcoat

(BC/CC) topcoat system that can achieve the standard specified under § 60.392(c) of this subpart, is demonstrated to the Administrator's satisfaction, whichever is sooner, the Ford Motor Company shall limit the discharge of VOC emissions to the atmosphere from each topcoat operation at the St. Paul, MN, assembly plant, to either:

(A) 2.0 kilograms of VOC per liter of applied coating solids from BC/CC topcoats, and 1.47 kilograms of VOC per liter of applied coating solids from all other topcoat coatings; or

(B) 1.47 kilograms of VOC per liter of applied coating solids from all topcoat coatings.

(iii) Commencing on the day after the expiration of the period described in paragraph (h)(1)(ii) and continuing thereafter, emissions of VOC's from each topcoat operation shall not exceed 1.47 kilograms of VOC per liter of applied coating solids as specified under § 60.392(c) of this subpart.

(iv) Each topcoat operation shall comply with the provisions of §§ 60.393, 60.394, 60.395, 60.396, and 60.397. Separate calculations shall be made for BC/CC coatings and all other topcoat coatings when necessary to demonstrate compliance with the emission limits specified under paragraph (h)(1)(ii)(A) of this section.

(v) A technology development report shall be sent to EPA Region V, 230 South Dearborn Street, Chicago, IL 60604, postmarked before 60 days after the promulgation of this waiver and annually thereafter while this waiver is in effect. A copy of this report shall be sent to Director, Emission Standards and Engineering Division, U.S. Environmental Protection Agency, MD–13, Research Triangle Park, NC 27711. The technology development report shall summarize the BC/CC development work including the results of exposure and endurance tests of the various coatings being evaluated. The report shall include an updated schedule of attainment of § 60.392(c) of this subpart, based on the most current information.

(2) This waiver shall be a federally promulgated standard of performance. As such, it shall be unlawful for the Ford Motor Company to operate a topcoat operation in violation of the requirements established in this waiver. Violation of the terms and conditions of this wavier shall subject the Ford Motor Company to enforcement under section 113 (b) and (c) of the Act (42 U.S.C. 7412 (b) and (c)) and under section 120 of the Act (42 U.S.C. 7420), as well as possible citizen enforcement under section 304 of the Act (42 U.S.C. 7604).

(3) This waiver shall not be construed to constrain the State of Minnesota from imposing upon the Ford Motor Corporation any emission reduction requirements at Ford's St. Paul light-duty truck assembly plant necessary for the maintenance of reasonable further progress or the attainment of the national ambient air quality standard for ozone or the maintenance of the national ambient air quality standard for ozone. Furthermore, this waiver shall not be construed as granting any exemptions from the applicability, enforcement, or other provisions of any other standards that apply or may apply to topcoat operations or any other operations at this light-duty truck assembly plant.

(i) *Ford Motor Company, Hazelwood, MO, passenger van assembly plant.* (1) Pursuant to section 111(j) of the Clean Air Act, 42 U.S.C. 7411(j), each topcoat operation at Ford Motor Company's passenger van assembly plant located in Hazelwood, MO, shall comply with the following conditions:

(i) The Ford Motor Company shall obtain the necessary permits as required under parts C and D of the Clean Air Act, as amended August 1977, to operate the Hazelwood assembly plant.

(ii) Commencing on September 9, 1985, and continuing to December 31, 1986, or until the basecoat/clearcoat (BC/CC) topcoat system that can achieve the standard specified under § 60.392(c) of this subpart is demonstrated to the Administrator's satisfaction, whichever is sooner, the Ford Motor Company shall limit the discharge of VOC emissions to the atmosphere from each topcoat operation at the Hazelwood, MO, assembly plant, to either:

(A) 2.5 kilograms of VOC per liter of applied coating solids from BC/CC topcoats, and 1.47 kilograms of VOC per

liter of applied coating solids from all other topcoat coatings; or

(B) 1.47 kilograms of VOC per liter of applied coating solids from all topcoat coatings.

(iii) Commencing on the day after the expiration of the period described in paragraph (i)(1)(ii) and continuing thereafter, emissions of VOC's from each topcoat operation shall not exceed 1.47 kilograms of VOC per liter of applied coating solids as specified under §60.392(c) of this subpart.

(iv) Each topcoat operation shall comply with the provisions of §§60.393, 60.394, 60.395, 60.396, and 60.397. Separate calculations shall be made for BC/CC coatings and all other topcoat coatings when necessary to demonstrate compliance with the emission limits specified under paragraph (i)(1)(ii)(A) of this section.

(v) A technology development report shall be sent to EPA Region VII, 726 Minnesota Avenue, Kansas City, KS 61101, postmarked before 60 days after the promulgation of this waiver and annually thereafter while this waiver is in effect. A copy of this report shall be sent to Director, Emission Standards and Engineering Division, U.S. Environmental Protection Agency, MD–13, Research Triangle Park, NC 27711. The technology development report shall summarize the BC/CC development work including the results of exposure and endurance tests of the various coatings being evaluated. The report shall include an updated schedule of attainment of §60.392(c) of this subpart, based on the most current information.

(2) This waiver shall be a federally promulgated standard of performance. As such, it shall be unlawful for the Ford Motor Company to operate a topcoat operation in violation of the requirements established in this waiver. Violation of the terms and conditions of this waiver shall subject the Ford Motor Company to enforcement under section 113 (b) and (c) of the Act (42 U.S.C. 7412 (b) and (c)) and under section 120 of the Act (42 U.S.C. 7420), as well as possible citizen enforcement under section 304 of the Act (42 U.S.C. 7604).

(3) This waiver shall not be construed to constrain the State of Missouri from imposing upon the Ford Motor Corporation any emission reduction at Ford's Hazelwood passenger van assembly plant necessary for the maintenance of reasonable further progresss or the attainment of the national ambient air quality standards for ozone or the maintenance of the national ambient air quality standard for ozone. Furthermore, this waiver shall not be construed as granting any exemptions from the applicability, enforcement, or other provisions of any other standards that apply or may apply to topcoat operations or any other operations at this passenger van assembly plant.

[48 FR 5454, Feb. 4, 1983, as amended at 50 FR 36834, Sept. 9, 1985]

Subpart NN—Standards of Performance for Phosphate Rock Plants

SOURCE: 47 FR 16589, Apr. 16, 1982, unless otherwise noted.

§60.400 Applicability and designation of affected facility.

(a) The provisions of this subpart are applicable to the following affected facilities used in phosphate rock plants which have a maximum plant production capacity greater than 3.6 megagrams per hour (4 tons/hr): dryers, calciners, grinders, and ground rock handling and storage facilities, except those facilities producing or preparing phosphate rock solely for consumption in elemental phosphorus production.

(b) Any facility under paragraph (a) of this section which commences construction, modification, or reconstruction after September 21, 1979, is subject to the requirements of this part.

§60.401 Definitions.

(a) *Phosphate rock plant* means any plant which produces or prepares phosphate rock product by any or all of the following processes: Mining, beneficiation, crushing, screening, cleaning, drying, calcining, and grinding.

(b) *Phosphate rock feed* means all material entering the process unit including, moisture and extraneous material as well as the following ore minerals:

Fluorapatite, hydroxylapatite, chlorapatite, and carbonateapatite.

(c) *Dryer* means a unit in which the moisture content of phosphate rock is reduced by contact with a heated gas stream.

(d) *Calciner* means a unit in which the moisture and organic matter of phosphate rock is reduced within a combustion chamber.

(e) *Grinder* means a unit which is used to pulverize dry phosphate rock to the final product size used in the manufacture of phosphate fertilizer and does not include crushing devices used in mining.

(f) *Ground phosphate rock handling and storage system* means a system which is used for the conveyance and storage of ground phosphate rock from grinders at phosphate rock plants.

(g) *Beneficiation* means the process of washing the rock to remove impurities or to separate size fractions.

§ 60.402 Standard for particulate matter.

(a) On and after the date on which the performance test required to be conducted by § 60.8 is completed, no owner or operator subject to the provisions of this subpart shall cause to be discharged into the atmosphere:

(1) From any phosphate rock dryer any gases which:

(i) Contain particulate matter in excess of 0.030 kilogram per megagram of phosphate rock feed (0.06 lb/ton), or

(ii) Exhibit greater than 10-percent opacity.

(2) From any phosphate rock calciner processing unbeneficiated rock or blends of beneficiated and unbeneficiated rock, any gases which:

(i) Contains particulate matter in excess of 0.12 kilogram per megagram of phosphate rock feed (0.23 lb/ton), or

(ii) Exhibit greater than 10-percent opacity.

(3) From any phosphate rock calciner processing beneficiated rock any gases which:

(i) Contain particulate matter in excess of 0.055 kilogram per megagram of phosphate rock feed (0.11 lb/ton), or

(ii) Exhibit greater than 10-percent opacity.

(4) From any phosphate rock grinder any gases which:

(i) Contain particulate matter in excess of 0.006 kilogram per megagram of phosphate rock feed (0.012 lb/ton), or

(ii) Exhibit greater than zero-percent opacity.

(5) From any ground phosphate rock handling and storage system any gases which exhibit greater than zero-percent opacity.

§ 60.403 Monitoring of emissions and operations.

(a) Any owner or operator subject to the provisions of this subpart shall install, calibrate, maintain, and operate a continuous monitoring system, except as provided in paragraphs (b) and (c) of this section, to monitor and record the opacity of the gases discharged into the atmosphere from any phosphate rock dryer, calciner, or grinder. The span of this system shall be set at 40-percent opacity.

(b) For ground phosphate rock storage and handling systems, continuous monitoring systems for measuring opacity are not required.

(c) The owner or operator of any affected phosphate rock facility using a wet scrubbing emission control device shall not be subject to the requirements in paragraph (a) of this section, but shall install, calibrate, maintain, and operate the following continuous monitoring devices:

(1) A monitoring device for the continuous measurement of the pressure loss of the gas stream through the scrubber. The monitoring device must be certified by the manufacturer to be accurate within ±250 pascals (±1 inch water) gauge pressure.

(2) A monitoring device for the continuous measurement of the scrubbing liquid supply pressure to the control device. The monitoring device must be accurate within ±5 percent of design scrubbing liquid supply pressure.

(d) For the purpose of conducting a performance test under § 60.8, the owner or operator of any phosphate rock plant subject to the provisions of this subpart shall install, calibrate, maintain, and operate a device for measuring the phosphate rock feed to any affected dryer, calciner, or grinder. The measuring device used must be accurate to within ±5 percent of the mass rate over its operating range.

(e) For the purpose of reports required under § 60.7(c), periods of excess emissions that shall be reported are defined as all 6-minute periods during which the average opacity of the plume from any phosphate rock dryer, calciner, or grinder subject to paragraph (a) of this section exceeds the applicable opacity limit.

(f) Any owner or operator subject to the requirements under paragraph (c) of this section shall report on a frequency specified in § 60.7(c) all measurement results that are less than 90 percent of the average levels maintained during the most recent performance test conducted under § 60.8 in which the affected facility demonstrated compliance with the standard under § 60.402.

[47 FR 16589, Apr. 16, 1982, as amended at 64 FR 7466, Feb. 12, 1999]

§ 60.404 Test methods and procedures.

(a) In conducting the performance tests required in § 60.8, the owner or operator shall use as reference methods and procedures the test methods in appendix A of this part or other methods and procedures as specified in this section, except as provided for in § 60.8(b).

(b) The owner or operator shall determine compliance with the particulate matter standards in § 60.402 as follows:

(1) The emission rate (E) of particulate matter shall be computed for each run using the following equation:

$E=(c_s Q_{sd})/(P K)$

where:

E=emission rate of particulate matter, kg/Mg (lb/ton) of phosphate rock feed.

c_s=concentration of particulate matter, g/dscm (g/dscf).

Q_{sd}=volumetric flow rate of effluent gas, dscm/hr (dscf/hr).

P=phosphate rock feed rate, Mg/hr (ton/hr).

K=conversion factor, 1000 g/kg (453.6 g/lb).

(2) Method 5 shall be used to determine the particulate matter concentration (c_s) and volumetric flow rate (Q_{sd}) of the effluent gas. The sampling time and sample volume for each run shall be at least 60 minutes and 0.85 dscm (30 dscf).

(3) The device of § 60.403(d) shall be used to determine the phosphate rock feed rate (P) for each run.

(4) Method 9 and the procedures in § 60.11 shall be used to determine opacity.

(c) To comply with § 60.403(f), if applicable, the owner or operator shall use the monitoring devices in § 60.403(c) (1) and (2) to determine the average pressure loss of the gas stream through the scrubber and the average scrubbing supply pressure during the particulate matter runs.

[54 FR 6676, Feb. 14, 1989; 54 FR 21344, May 17, 1989]

Subpart PP—Standards of Performance for Ammonium Sulfate Manufacture

SOURCE: 45 FR 74850, Nov. 12, 1980, unless otherwise noted.

§ 60.420 Applicability and designation of affected facility.

(a) The affected facility to which the provisions of this subpart apply is each ammonium sulfate dryer within an ammonium sulfate manufacturing plant in the caprolactam by-product, synthetic, and coke oven by-product sectors of the ammonium sulfate industry.

(b) Any facility under paragraph (a) of this section that commences construction or modification after February 4, 1980, is subject to the requirements of this subpart.

§ 60.421 Definitions.

As used in this subpart, all terms not defined herein shall have the meaning given them in the Act and in subpart A.

Ammonium sulfate dryer means a unit or vessel into which ammonium sulfate is charged for the purpose of reducing the moisture content of the product using a heated gas stream. The unit includes foundations, superstructure, material charger systems, exhaust systems, and integral control systems and instrumentation.

Ammonium sulfate feed material streams means the sulfuric acid feed stream to the reactor/crystallizer for synthetic and coke oven by-product ammonium sulfate manufacturing plants; and means the total or combined feed streams (the oximation ammonium sulfate stream and the rearrangement

reaction ammonium sulfate stream) to the crystallizer stage, prior to any recycle streams.

Ammonium sulfate manufacturing plant means any plant which produces ammonium sulfate.

Caprolactam by-product ammonium sulfate manufacturing plant means any plant which produces ammonium sulfate as a by-product from process streams generated during caprolactam manufacture.

Coke oven by-product ammonium sulfate manufacturing plant means any plant which produces ammonium sulfate by reacting sulfuric acid with ammonia recovered as a by-product from the manufacture of coke.

Synthetic ammonium sulfate manufacturing plant means any plant which produces ammonium sulfate by direct combination of ammonia and sulfuric acid.

§ 60.422 Standards for particulate matter.

On or after the date on which the performance test required to be conducted by § 60.8 is completed, no owner or operator of an ammonium sulfate dryer subject to the provisions of this subpart shall cause to be discharged into the atmosphere, from any ammonium sulfate dryer, particulate matter at an emission rate exceeding 0.15 kilogram of particulate per megagram of ammonium sulfate produced (0.30 pound of particulate per ton of ammonium sulfate produced) and exhaust gases with greater than 15 percent opacity.

§ 60.423 Monitoring of operations.

(a) The owner or operator of any ammonium sulfate manufacturing plant subject to the provisions of this subpart shall install, calibrate, maintain, and operate flow monitoring devices which can be used to determine the mass flow of ammonium sulfate feed material streams to the process. The flow monitoring device shall have an accuracy of ± 5 percent over its range. However, if the plant uses weigh scales of the same accuracy to directly measure production rate of ammonium sulfate, the use of flow monitoring devices is not required.

(b) The owner or operator of any ammonium sulfate manufacturing plant subject to the provisions of this subpart shall install, calibrate, maintain, and operate a monitoring device which continuously measures and permanently records the total pressure drop across the emission control system. The monitoring device shall have an accuracy of ± 5 percent over its operating range.

§ 60.424 Test methods and procedures.

(a) In conducting the performance tests required in § 60.8, the owner or operator shall use as reference methods and procedures the test methods in appendix A of this part or other methods and procedures as specified in this section, except as provided in § 60.8(b).

(b) The owner or operator shall determine compliance with the particulate matter standards in § 60.422 as follows:

(1) The emission rate (E) of particulate matter shall be computed for each run using the following equation:

$$E=(c_s Q_{sd})/(PK)$$

where:

E=emission rate of particulate matter, kg/Mg (lb/ton) of ammonium sulfate produced.

c_s=concentration of particulate matter, g/dscm (g/dscf).

Q_{sd}=volumetric flow rate of effluent gas, dscm/hr (dscf/hr).

P=production rate of ammonium sulfate, Mg/hr (ton/hr).

K=conversion factor, 1000 g/kg (453.6 g/lb).

(2) Method 5 shall be used to determine the particulate matter concentration (c_s) and volumetric flow rate (Q_{sd}) of the effluent gas. The sampling time and sample volume for each run shall be at least 60 minutes and 1.50 dscm (53 dscf).

(3) Direct measurement using product weigh scales or computed from material balance shall be used to determine the rate (P) of the ammonium sulfate production. If production rate is determined by material balance, the following equations shall be used:

(i) For synthetic and coke oven by-product ammonium sulfate plants:

$$P=ABCK¼$$

where:

A=sulfuric aid flow rate to the reactor/crystallizer averaged over the time-period taken to conduct the run, liter/min.

B=acid density (a function of acid strength and temperature), g/cc.
C=acid strength, decimal fraction.
K¼=conversion factor, 0.0808 (Mg-min-cc)/(g-hr-liter) [0.0891 (ton-min-cc)/(g-hr-liter)].

(ii) For caprolactam by-product ammonium sulfate plants:

$P=DEFK''$

where:
D=total combined feed stream flow rate to the ammonium crystallizer before the point where any recycle streams enter the stream averaged over the time-period taken to conduct the test run, liter/min.
E=density of the process stream solution, g/liter.
F=percent mass of ammonium sulfate in the process solution, decimal fraction.
K''=conversion factor, 6.0×10^{-5} (Mg-min)/(g-hr) [6.614×10^{-5} (ton-min)/(g-hr)].

(3) Method 9 and the procedures in §60.11 shall be used to determine the opacity.

[54 FR 6676, Feb. 14, 1989]

Subpart QQ—Standards of Performance for the Graphic Arts Industry: Publication Rotogravure Printing

SOURCE: 47 FR 50649, Nov. 8, 1982, unless otherwise noted.

§60.430 Applicability and designation of affected facility.

(a) Except as provided in paragraph (b) of this section, the affected facility to which the provisions of this subpart apply is each publication rotogravure printing press.

(b) The provisions of this subpart do not apply to proof presses.

(c) Any facility under paragraph (a) of this section that commences construction, modification, or reconstruction after October 28, 1980 is subject to the requirements of this subpart.

§60.431 Definitions and notations.

(a) All terms used in this subpart that are not defined below have the meaning given to them in the Act and in subpart A of this part.

Automatic temperature compensator means a device that continuously senses the temperature of fluid flowing through a metering device and automatically adjusts the registration of the measured volume to the corrected equivalent volume at a base temperature.

Base temperature means an arbitrary reference temperature for determining liquid densities or adjusting the measured volume of a liquid quantity.

Density means the mass of a unit volume of liquid, expressed as grams per cubic centimeter, kilograms per liter, or pounds per gallon, at a specified temperature.

Gravure cylinder means a printing cylinder with an intaglio image consisting of minute cells or indentations specially engraved or etched into the cylinder's surface to hold ink when continuously revolved through a fountain of ink.

Performance averaging period means 30 calendar days, one calendar month, or four consecutive weeks as specified in sections of this subpart.

Proof press means any device used only to check the quality of the image formation of newly engraved or etched gravure cylinders and prints only nonsaleable items.

Publication rotogravure printing press means any number of rotogravure printing units capable of printing simultaneously on the same continuous web or substrate and includes any associated device for continuously cutting and folding the printed web, where the following saleable paper products are printed:

Catalogues, including mail order and premium,
Direct mail advertisements, including circulars, letters, pamphlets, cards, and printed envelopes,
Display advertisements, including general posters, outdoor advertisements, car cards, window posters; counter and floor displays; point-of-purchase, and other printed display material,
Magazines,
Miscellaneous advertisements, including brochures, pamphlets, catalogue sheets, circular folders, announcements, package inserts, book jackets, market circulars, magazine inserts, and shopping news,
Newspapers, magazine and comic supplements for newspapers, and preprinted newspaper inserts, including hi-fi and spectacolor rolls and sections,
Periodicals, and
Telephone and other directories, including business reference services.

Raw ink means all purchased ink.

Related coatings means all non-ink purchased liquids and liquid-solid mixtures containing VOC solvent, usually referred to as extenders or varnishes, that are used at publication rotogravure printing presses.

Rotogravure printing unit means any device designed to print one color ink on one side of a continuous web or substrate using a gravure cylinder.

Solvent-borne ink systems means ink and related coating mixtures whose volatile portion consists essentially of VOC solvent with not more than five weight percent water, as applied to the gravure cylinder.

Solvent recovery system means an air pollution control system by which VOC solvent vapors in air or other gases are captured and directed through a condenser(s) or a vessel(s) containing beds of activated carbon or other adsorbents. For the condensation method, the solvent is recovered directly from the condenser. For the adsorption method, the vapors are adsorbed, then desorbed by steam or other media, and finally condensed and recovered.

VOC means volatile organic compound.

VOC solvent means an organic liquid or liquid mixture consisting of VOC components.

Waterborne ink systems means ink and related coating mixtures whose volatile portion consists of a mixture of VOC solvent and more than five weight percent water, as applied to the gravure cylinder.

(b) Symbols used in this subpart are defined as follows:

D_B=the density at the base temperature of VOC solvent used or recovered during one performance averaging period.

D_{ci}=the density of each color of raw ink and each related coating (i) used at the subject facility (or facilities), at the coating temperature when the volume of coating used is measured.

D_{di}=the density of each VOC solvent (i) added to the ink for dilution at the subject facility (or facilities), at the solvent temperature when the volume of solvent used is measured.

D_{gi}=the density of each VOC solvent (i) used as a cleaning agent at the subject facility (or facilities), at the solvent temperature when the volume of cleaning solvent used is measured.

D_{hi}=the density of each quantity of water (i) added at the subject facility (or facilities) for dilution of waterborne ink systems at the water temperature when the volume of dilution water used is measured.

D_{mi}=the density of each quantity of VOC solvent and miscellaneous solvent-borne waste inks and waste VOC solvents (i) recovered from the subject facility (or facilities), at the solvent temperature when the volume of solvent recovered is measured.

D_{oi}=the density of the VOC solvent contained in each raw ink and related coating (i) used at the subject facility (or facilities), at the coating temperature when the volume of coating used is measured.

D_{wi}=the density of the water contained in each waterborne raw ink and related coating (i) used at the subject facility (or facilities), at the coating temperature when the volume of coating used is measured.

L_{ci}=the measured liquid volume of each color of raw ink and each related coating (i) used at the facility of a corresponding VOC content, V_{oi} or W_{oi}, with a VOC density, D_{oi}, and a coating density, D_{ci}.

L_{di}=the measured liquid volume of each VOC solvent (i) with corresponding density, D_{di}, added to dilute the ink used at

M_{ci}=the mass, determined by direct weighing, of each color of raw ink and each related coating (i) used at the subject facility (or facilities).

M_d=the mass, determined by direct weighing, of VOC solvent added to dilute the ink used at the subject facility (or facilities) during one performance averaging period.

M_g=the mass, determined by direct weighing, of VOC solvent used as a cleaning agent at the subject facility (or facilities) during one performance averaging period.

M_h=the mass, determined by direct weighing, of water added for dilution with waterborne ink systems used at the subject facility (or facilities) during one performance averaging period.

M_m=the mass, determined by direct weighing, of VOC solvent and miscellaneous solvent-borne waste inks and waste VOC solvents recovered from the subject facility (or facilities) during one performance averaging period.

M_o=the total mass of VOC solvent contained in the raw inks and related coatings used at the subject facility (or facilities) during one performance averaging period.

M_r=the total mass of VOC solvent recovered from the subject facility (or facilities) during one performance averaging period.

M_t=the total mass of VOC solvent used at the subject facility (or facilities) during one performance averaging period.

M_v=the total mass of water used with waterborne ink systems at the subject facility (or facilities) during one performance averaging period.

M_w=the total mass of water contained in the waterborne raw inks and related coatings used at the subject facility (or facilities) during one performance averaging period.

P=the average VOC emission percentage for the subject facility (or facilities) for one performance averaging period.

V_{oi}=the liquid VOC content, expressed as a volume fraction of VOC volume per total volume of coating, of each color of raw ink and related coating (i) used at the subject facility (or facilities).

V_{wi}=the water content, expressed as a volume fraction of water volume per total volume of coating, of each color of waterborne raw ink and related coating (i) used at the subject facility (or facilities).

W_{oi}=the VOC content, expressed as a weight fraction of mass of VOC per total mass of coating, of each color of raw ink and related coating (i) used at the subject facility (or facilities).

W_{wi}=the water content, expressed as a weight fraction of mass of water per total mass of coating, of each color of waterborne raw ink and related coating (i) used at the subject facility (or facilities).

(c) The following subscripts are used in this subpart with the above symbols to denote the applicable facility:

a=affected facility.

b=both affected and existing facilities controlled in common by the same air pollution control equipment.

e=existing facility.

f=all affected and existing facilities located within the same plant boundary.

§ 60.432 Standard for volatile organic compounds.

During the period of the performance test required to be conducted by § 60.8 and after the date required for completion of the test, no owner or operator subject to the provisions of this subpart shall cause to be discharged into the atmosphere from any affected facility VOC equal to more than 16 percent of the total mass of VOC solvent and water used at that facility during any one performance averaging period. The water used includes only that water contained in the waterborne raw inks and related coatings and the water added for dilution with waterborne ink systems.

§ 60.433 Performance test and compliance provisions.

(a) The owner or operator of any affected facility (or facilities) shall conduct performance tests in accordance with § 60.8, under the following conditions:

(1) The performance averaging period for each test is 30 consecutive calendar days and not an average of three separate runs as prescribed under § 60.8(f).

(2) Except as provided under paragraphs (f) and (g) of this section, if affected facilities routinely share the same raw ink storage/handling system with existing facilities, then temporary measurement procedures for segregating the raw inks, related coatings, VOC solvent, and water used at the affected facilities must be employed during the test. For this case, an overall emission percentage for the combined facilities as well as for only the affected facilities must be calculated during the test.

(3) For the purpose of measuring bulk storage tank quantities of each color of raw ink and each related coating used, the owner or operator of any affected facility shall install, calibrate, maintain, and continuously operate during the test one or more:

(i) Non-resettable totalizer metering device(s) for indicating the cumulative liquid volumes used at each affected facility; or

(ii) Segregated storage tanks for each affected facility to allow determination of the liquid quantities used by measuring devices other than the press meters required under item (i) of this article; or

(iii) Storage tanks to serve more than one facility with the liquid quantities used determined by measuring devices other than press meters, if facilities are combined as decribed under paragraph (d), (f), or (g) of this section.

(4) The owner or operator may choose to install an automatic temperature compensator with any liquid metering device used to measure the raw inks, related coatings, water, or VOC solvent used, or VOC solvent recovered.

(5) Records of the measured amounts used at the affected facility and the liquid temperature at which the

amounts were measured are maintained for each shipment of all purchased material or on at least a weekly basis for:

(i) The raw inks and related coatings used;

(ii) The VOC and water content of each raw ink and related coating used as determined according to § 60.435.

(iii) The VOC solvent and water added to the inks used;

(iv) The VOC solvent used as a cleaning agent; and

(v) The VOC solvent recovered.

(6) The density variations with temperature of the raw inks, related coatings, VOC solvents used, and VOC solvent recovered are determined by the methods stipulated in § 60.435(d).

(7) The calculated emission percentage may be reported as rounded-off to the nearest whole number.

(8) Printing press startups and shutdowns are not included in the exemption provisions under § 60.8(c). Frequent periods of press startups and shutdowns are normal operations and constitute representative conditions for the purpose of a performance test.

(b) If an affected facility uses waterborne ink systems or a combination of waterborne and solvent-borne ink systems with a solvent recovery system, compliance is determined by the following procedures, except as provided in paragraphs (d), (e), (f), and (g) of this section:

(1) The mass of VOC in the solvent-borne and waterborne raw inks and related coatings used is determined by the following equation:

$$(M_o)_a = \sum_{i=1}^{k} (M_{ci})_a (W_{oi})_a + \sum_{i=1}^{m} (L_{ci})_a (D_{ci})_a (W_{oi})_a + \sum_{i=1}^{n} (L_{ci})_a (V_{oi})_a (D_{oi})_a$$

where:

k is the total number of raw inks and related coatings measured as used in direct mass quantities with different amounts of VOC content.

m is the total number of raw inks and related coatings measured as used by volume with different amounts of VOC content or different densities.

n is the total number of raw inks and related coatings measured as used by volume with different amounts of VOC content or different VOC solvent densities.

(2) The total mass of VOC used is determined by the following equation:

$$(M_t)_a = (M_o)_a + \sum_{i=1}^{m} (L_{di})_a (D_{di})_a + (M_d)_a + \sum_{i=1}^{n} (L_{gi})_a (D_{gi})_a + (M_g)_a$$

where "m" and "n" are the respective total numbers of VOC dilution and cleaning solvents measured as used by volume with different densities.

(3) The mass of water in the waterborne raw inks and related coatings used is determined by the following equation:

$$(M_w)_a = \sum_{i=1}^{k} (M_{ci})_a (W_{wi})_a + \sum_{i=1}^{m} (L_{ci})_a (D_{ci})_a (W_{wi})_a + \sum_{i=1}^{n} (L_{ci})_a (V_{wi})_a (D_{wi})_a$$

where:

k is the total number of raw inks and related coatings measured as used in direct mass quantities with different amounts of water content.

m is the total number of raw inks and related coatings measured as used by volume with different amounts of water content or different densities.

n is the total number of raw inks and related coatings measured as used by volume with different amounts of water content or different water densities.

(4) The total mass of water used is determined by the following equation:

$$(M_v)_a = (M_w)_a + (M_h)_a + \sum_{i=1}^{m} (L_{hi})_a (D_{hi})_a$$

where "m" is the total number of water dilution additions measured as used by volume with different densities.

(5) The total mass of VOC solvent recovered is determined by the following equation:

$$(M_r)_a = (M_m)_a + \sum_{i=1}^{k} (L_{mi})_a (D_{mi})_a$$

where "k" if the total number of VOC solvents, miscellaneous solvent-borne waste inks, and waste VOC solvents measured as recovered by volume with different densities.

(6) The average VOC emission percentage for the affected facility is determined by the following equation:

$$P_a = \left[\frac{(M_t)_a - (M_r)_a}{(M_t)_a + (M_v)_a} \right] \times 100$$

(c) If an affected facility controlled by a solvent recovery system uses only solvent-borne ink systems, the owner or operator may choose to determine compliance on a direct mass or a density-corrected liquid volume basis. Except as provided in paragraphs (d), (e), (f), and (g) of this section, compliance is determined as follows:

(1) On a direct mass basis, compliance is determined according to paragraph (b) of this section, except that the water term, M_v, does not apply.

(2) On a density-corrected liquid volume basis, compliance is determined by the following procedures:

(i) A base temperature corresponding to that for the largest individual amount of VOC solvent used or recovered from the affected facility, or other reference temperature, is chosen by the owner or operator.

(ii) The corrected liquid volume of VOC in the raw inks and related coatings used is determined by the following equation:

$$(L_o)_a = \sum_{i=1}^{k} \frac{(M_{oi})_a (W_{oi})_a}{D_B} + \sum_{i=1}^{m} \frac{(L_{oi})_a (D_{oi})_a (W_{oi})_a}{D_B} + \sum_{i=1}^{n} \frac{(L_{oi})_a (V_{oi})_a (D_{oi})_a}{D_B}$$

where:

k is the total number of raw inks and related coatings measured as used in direct mass quantities with different amounts of VOC content.

m is the total number of raw inks and related coatings measured as used by volume with different amounts of VOC content or different densities.

n is the total number of raw inks and related coatings measured as used by volume with different amounts of VOC content or different VOC solvent densities.

(iii) The total corrected liquid volume of VOC used is determined by the following equation:

$$(L_t)_a = (L_o)_a + \sum_{i=1}^{m} \frac{(L_{di})_a (D_{di})_a}{D_B} + \frac{(M_d)_a}{D_B} + \sum_{i=1}^{n} \frac{(L_{gi})_a (D_{gi})_a}{D_B} + \frac{(M_g)_a}{D_B}$$

where ''m'' and ''n'' are the respective total numbers of VOC dilution and cleaning solvents measured as used by volume with different densities.

(iv) The total corrected liquid volume of VOC solvent recovered is determined by the following equation:

$$(L_r)_a = \frac{(M_m)_a}{D_B} + \sum_{i=1}^{k} \frac{(L_{mi})_a (D_{mi})_a}{D_B}$$

where ''k'' is the total number of VOC solvents, miscellaneous solvent-borne waste inks, and waste VOC solvents measured as recovered by volume with different densities.

(v) The average VOC emission percentage for the affected facility is determined by the following equation:

$$P_a = \left[\frac{(L_t)_a - (L_r)_a}{(L_t)_a}\right] \times 100$$

(d) If two or more affected facilities are controlled by the same solvent recovery system, compliance is determined by the procedures specified in paragraph (b) or (c) of this section, whichever applies, except that $(L_t)_a$ and $(L_r)_a$, $(M_t)_a$, $(M_r)_a$, and $(M_v)_a$, are the collective amounts of VOC solvent and water corresponding to all the affected facilities controlled by that solvent recovery system. The average VOC emission percentage for each of the affected facilities controlled by that same solvent recovery system is assumed to be equal.

(e) Except as provided under paragraph (f) of this section, if an existing facility (or facilities) and an affected facility (or facilities) are controlled in common by the same solvent recovery system, the owner or operator shall determine compliance by conducting a separate emission test on the existing facility (or facilities) and then conducting a performance test on the combined facilities as follows:

(1) Before the initial startup of the affected facility (or facilities) and at any other time as requested by the Administrator, the owner or operator shall conduct emission test(s) on the existing facility (or facilities) controlled by the subject solvent recovery system. The solvent recovery system must handle VOC emissions from only the subject existing facility (or facilities), not from affected facilities, during the emission test.

(2) During the emission test, the affected facilities are subject to the standard stated in §60.432.

(3) The emission test is conducted over a 30 consecutive calendar day averaging period according to the conditions stipulated in paragraphs (a)(1)

through (a)(5) of this section, except that the conditions pertain to only existing facilities instead of affected facilities.

(4) The owner or operator of the existing facility (or facilities) shall provide the Administrator at least 30 days prior notice of the emission test to afford the Administrator the opportunity to have an observer present.

(5) The emission percentage for the existing facility (or facilities) during the emission test is determined by one of the following procedures:

(i) If the existing facility (or facilities) uses a combination of waterborne and solvent-borne ink systems, the average VOC emission percentage must be determined on a direct mass basis according to paragraph (b) or (d) of this section, whichever applies, with the following equation:

$$P_e = \left[\frac{(M_t)_e - (M_r)_e}{(M_t)_e + (M_v)_e}\right] \times 100$$

where the water and VOC solvent amounts pertain to only existing facilities.

(ii) If the existing facility (or facilities) uses only solvent-borne ink systems, the owner or operator may choose to determine the emission percentage either on a direct mass basis or a density-corrected liquid volume basis according to paragraph (c) or (d) of this section, whichever applies. On a direct mass basis, the average VOC emission percentage is determined by the equation presented in article (i) of this paragraph. On a density-corrected liquid volume basis, the average VOC emission percentage is determined by the following equation:

$$P_a = \left[\frac{(L_t)_a - (L_r)_a}{(L_t)_a}\right] \times 100$$

where the VOC solvent amounts pertain to only existing facilities.

(6) The owner or operator of the existing facility (or facilities) shall furnish the Administrator a written report of the results of the emission test.

(7) After completion of the separate emission test on the existing facility (or facilities), the owner or operator shall conduct performance test(s) on the combined facilities with the solvent recovery system handling VOC emissions from both the existing and affected facilities.

(8) During performance test(s), the emission percentage for the existing facility (or facilities), P_e, is assumed to be equal to that determined in the latest emission test. The administrator may request additional emission tests if any physical or operational changes occur to any of the subject existing facilities.

(9) The emission percentage for the affected facility (or facilities) during performance test(s) with both existing and affected facilities connected to the solvent recovery system is determined by one of the following procedures:

(i) If any of the combined facilities uses both waterborne and solvent-borne ink systems, the average VOC emission percentage must be determined on a direct mass basis according to paragraph (b) or (d) of this section, whichever applies, with the following equation:

$$P_a = \left\{\frac{(M_t)_b - (M_r)_b - \left(\frac{P_e}{100}\right)[(M_t)_e + (M_v)_e]}{(M_t)_a + (M_v)_a}\right\} \times 100$$

where $(M_t)_b$ and $(M_r)_b$ are the collective VOC solvent amounts pertaining to all the combined facilities.

(ii) If all of the combined facilities use only solvent-borne ink systems, the owner or operator may choose to determine performance of the affected facility (or facilities) either on a direct mass basis or a density-corrected liquid volume basis according to paragraph (c) or (d) of this section, whichever applies. On a direct mass basis, the average VOC emission percentage is determined by the equation presented in article (i) of this paragraph. On a density-corrected liquid volume basis, the average VOC emission percentage is determined by the following equation:

$$P_a = \left[\frac{(L_t)_b - (L_r)_b - (L_t)_e\left(\frac{P_e}{100}\right)}{(L_t)_a}\right] \times 100$$

where $(L_t)_b$ and $(L_r)_b$ are the collective VOC solvent amounts pertaining to all the combined facilities.

(f) The owner or operator may choose to show compliance of the combined performance of existing and affected facilities controlled in common by the

same solvent recovery system. A separate emission test for existing facilities is not required for this option. The combined performance is determined by one of the following procedures:

(1) If any of the combined facilities uses both waterborne and solvent-borne ink systems, the combined average VOC emission percentage must be determined on a direct mass basis according to paragraph (b) or (d) of this section, whichever applies, with the following equation:

$$P_b = \left[\frac{(M_t)_b - (M_r)_b}{(M_t)_b + (M_v)_b}\right] \times 100$$

(2) If all of the combined facilities use only solvent-borne ink systems, the owner or operator may choose to determine performance either on a direct mass basis or a density-corrected liquid volume basis according to paragraph (c) or (d) of this section, whichever applies. On a direct mass basis, the average VOC emission percentage is determined by the equation presented in article (i) of this paragraph. On a density-corrected liquid volume basis, the average VOC emission percentage is determined by the following equation:

$$P_a = \left\{\frac{(L_t)_a - (L_r)_a}{(L_t)_a}\right\} \times 100$$

(g) If all existing and affected facilities located within the same plant boundary use waterborne ink systems or solvent-borne ink systems with solvent recovery systems, the owner or operator may choose to show compliance on a plantwide basis for all the existing and affected facilities together. No separate emission tests on existing facilities and no temporary segregated liquid measurement procedures for affected facilities are required for this option. The plantwide performance is determined by one of the following procedures:

(1) If any of the facilities use waterborne ink systems, the total plant average VOC emission percentage must be determined on a direct mass basis according to paragraph (b) of this section with the following equation:

$$P_a = \left\{\frac{(M_t)_b - (M_r)_b - \left(\frac{P_e}{100}\right)[(M_t)_e + (M_v)_e]}{(M_t)_a + (M_v)_a}\right\} \times 100$$

Where $(M_t)_f$ and $(M_v)_f$ are the collective VOC solvent and water amounts used at all the subject plant facilities during the performance test.

(2) If all of the plant facilities use only solvent-borne ink systems, the owner or operator may choose to determine performance either on a direct mass basis or a density-corrected liquid volume basis according to paragraph (c) of this section. On a direct mass basis, the total plant average VOC emission percentage is determined by the equation presented in article (i) of this paragraph. On a density-corrected liquid volume basis, the total plant average VOC emission percentage is determined by the following equation:

$$P_t = \left[\frac{(L_t)_k - (L_r)_b - (L_r)_k - (L_r)_b}{(L_t)_k}\right] \times 100$$

Where $(L_t)_f$ is the collective VOC solvent amount used at all the subject plant facilities during the performance test.

§ 60.434 Monitoring of operations and recordkeeping.

(a) After completion of the performance test required under § 60.8, the owner or operator of any affected facility using waterborne ink systems or solvent-borne ink systems with solvent recovery systems shall record the amount of solvent and water used, solvent recovered, and estimated emission percentage for each performance averaging period and shall maintain these records for 2 years. The emission percentage is estimated as follows:

(1) The performance averaging period for monitoring of proper operation and maintenance is a calendar month or 4 consecutive weeks, at the option of the owner or operator.

(2) If affected facilities share the same raw ink storage/handling system with existing facilities, solvent and water used, solvent recovered, and emission percentages for the combined facilities may be documented. Separate emission percentages for only the affected facilities are not required in this case. The combined emission percentage is compared to the overall average for the existing and affected facilities'

emission percentage determined during the most recent performance test.

(3) Except as provided in article (4) of this paragraph, temperatures and liquid densities determined during the most recent performance test are used to calculate corrected volumes and mass quantities.

(4) The owner or operator may choose to measure temperatures for determination of actual liquid densities during each performance averaging period. A different base temperature may be used for each performance averaging period if desired by the owner or operator.

(5) The emission percentage is calculated according to the procedures under § 60.433 (b) through (g), whichever applies, or by a comparable calculation which compares the total solvent recovered to the total solvent used at the affected facility.

§ 60.435 Test methods and procedures.

(a) The owner or operator of any affected facility using solvent-borne ink systems shall determine the VOC content of the raw inks and related coatings used at the affected facility by:

(1) Analysis using Reference Method 24A of routine weekly samples of raw ink and related coatings in each respective storage tank; or

(2) Analysis using Reference Method 24A of samples of each shipment of all purchased raw inks and related coatings; or

(3) Determination of the VOC content from the formulation data supplied by the ink manufacturer with each shipment of raw inks and related coatings used.

(b) The owner or operator of any affected facility using solvent-borne ink systems shall use the results of verification analyses by Reference Method 24A to determine compliance when discrepancies with ink manufacturers' formulation data occur.

(c) The owner or operator of any affected facility using waterborne ink systems shall determine the VOC and water content of raw inks and related coatings used at the affected facility by:

(1) Determination of the VOC and water content from the formulation data supplied by the ink manufacturer with each shipment of purchased raw inks and related coatings used; or

(2) Analysis of samples of each shipment of purchased raw inks and related coatings using a test method approved by the Administrator in accordance with § 60.8(b).

(d) The owner or operator of any affected facility shall determine the density of raw inks, related coatings, and VOC solvents by:

(1) Making a total of three determinations for each liquid sample at specified temperatures using the procedure outlined in ASTM D 1475–60 (Reapproved 1980), which is incorporated by reference. It is available from the American Society of Testing and Materials, 1916 Race Street, Philadelphia, Pennsylvania 19103. It is also available for inspection at the Office of the Federal Register, 800 North Capitol Street, NW., suite 700, Washington, DC. This incorporation by reference was approved by the Director of the Federal Register on November 8, 1982. This material is incorporated as it exists on the date of approval and a notice of any change in these materials will be published in the FEDERAL REGISTER. The temperature and density is recorded as the arithmetic average of the three determinations; or

(2) Using literature values, at specified temperatures, acceptable to the Administrator.

(e) If compliance is determined according to § 60.433 (e), (f), or (g), the existing as well as affected facilities are subject to the requirements of paragraphs (a) through (d) of this section.

Subpart RR—Standards of Performance for Pressure Sensitive Tape and Label Surface Coating Operations

SOURCE: 48 FR 48375, Oct. 18, 1983, unless otherwise noted.

§ 60.440 Applicability and designation of affected facility.

(a) The affected facility to which the provisions of this subpart apply is each coating line used in the manufacture of pressure sensitive tape and label materials.

(b) Any affected facility which inputs to the coating process 45 Mg of VOC or

less per 12 month period is not subject to the emission limits of §60.442(a), however, the affected facility is subject to the requirements of all other applicable sections of this subpart. If the amount of VOC input exceeds 45 Mg per 12 month period, the coating line will become subject to §60.442(a) and all other sections of this subpart.

(c) This subpart applies to any affected facility which begins construction, modification, or reconstruction after December 30, 1980.

§ 60.441 Definitions and symbols.

(a) Except as otherwise required by the context, terms used in this subpart are defined in the Act, in subpart A of this part, or in this section as follows:

Coating applicator means an apparatus used to apply a surface coating to a continuous web.

Coating line means any number or combination of adhesive, release, or precoat coating applicators, flashoff areas, and ovens which coat a continuous web, located between a web unwind station and a web rewind station, to produce pressure sensitive tape and label materials.

Coating solids applied means the solids content of the coated adhesive, release, or precoat as measured by Reference Method 24.

Flashoff area means the portion of a coating line after the coating applicator and usually before the oven entrance.

Fugitive volatile organic compounds means any volatile organic compounds which are emitted from the coating applicator and flashoff areas and are not emitted in the oven.

Hood or enclosure means any device used to capture fugitive volatile organic compounds.

Oven means a chamber which uses heat or irradiation to bake, cure, polymerize, or dry a surface coating.

Precoat means a coating operation in which a coating other than an adhesive or release is applied to a surface during the production of a pressure sensitive tape or label product.

Solvent applied in the coating means all organic solvent contained in the adhesive, release, and precoat formulations that is metered into the coating applicator from the formulation area.

Total enclosure means a structure or building around the coating applicator and flashoff area or the entire coating line for the purpose of confining and totally capturing fugitive VOC emissions.

VOC means volatile organic compound.

(b) All symbols used in this subpart not defined below are given meaning in the Act or in subpart A of this part.

a = the gas stream vents exiting the emission control device.

b = the gas stream vents entering the emission control device.

C_{aj} = the concentration of VOC (carbon equivalent) in each gas stream (j) exiting the emission control device, in parts per million by volume.

C_{bi} = the concentration of VOC (carbon equivalent) in each gas stream (i) entering the emission control device, in parts per million by volume.

C_{fk} = the concentration of VOC (carbon equivalent) in each gas stream (k) emitted directly to the atmosphere, in parts per million by volume.

G = the calculated weighted average mass (kg) of VOC per mass (kg) of coating solids applied each calendar month.

M_{ci} = the total mass (kg) of each coating (i) applied during the calendar month as determined from facility records.

M_r = the total mass (kg) of solvent recovered for a calendar month.

Q_{aj} = the volumetric flow rate of each effluent gas stream (j) exiting the emission control device, in dry standard cubic meters per hour.

Q_{bi} = the volumetric flow rate of each effluent gas stream (i) entering the emission control device, in dry standard cubic meters per hour.

Q_{fk} = the volumetric flow rate of each effluent gas stream (k) emitted to the atmosphere, in dry standard cubic meters per hour.

R = the overall VOC emission reduction achieved for a calendar month (in percent).

R_q = the required overall VOC emission reduction (in percent).

W_{oi} = the weight fraction of organics applied of each coating (i) applied during a calendar month as determined from Reference Method 24 or coating manufacturer's formulation data.

W_{si} = the weight fraction of solids applied of each coating (i) applied during a calendar month as determined from Reference Method 24 or coating manufacturer's formulation data.

§ 60.442 Standard for volatile organic compounds.

(a) On and after the date on which the performance test required by § 60.8 has been completed each owner or operator subject to this subpart shall:

(1) Cause the discharge into the atmosphere from an affected facility not more than 0.20 kg VOC/kg of coating solids applied as calculated on a weighted average basis for one calendar month; or

(2) Demonstrate for each affected facility;

(i) A 90 percent overall VOC emission reduction as calculated over a calendar month; or

(ii) The percent overall VOC emission reduction specified in § 60.443(b) as calculated over a calendar month.

§ 60.443 Compliance provisions.

(a) To determine compliance with § 60.442 the owner or operator of the affected facility shall calculate a weighted average of the mass of solvent used per mass of coating solids applied for a one calendar month period according to the following procedures:

(1) Determine the weight fraction of organics and the weight fraction of solids of each coating applied by using Reference Method 24 or by the coating manufacturer's formulation data.

(2) Compute the weighted average by the following equation:

$$G = \frac{\sum_{i=1}^{n} W_{oi} M_{ci}}{\sum_{i=1}^{n} W_{si} M_{ci}}$$

(3) For each affected facility where the value of G is less than or equal to 0.20 kg VOC per kg of coating solids applied, the affected facility is in compliance with § 60.442(a)(1).

(b) To determine compliance with § 60.442(a)(2), the owner or operator shall calculate the required overall VOC emission reduction according to the following equation:

$$R_q = \frac{G - 0.20}{G} \times 100$$

If R_q less than or equal to 90 percent, then the required overall VOC emission reduction is R_q. If R_q is greater than 90 percent, then the required overall VOC emission reduction is 90 percent.

(c) Where compliance with the emission limits specified in § 60.442(a)(2) is achieved through the use of a solvent recovery system, the owner or operator shall determine the overall VOC emission reduction for a one calendar month period by the following equation:

$$R = \sum_{i=1}^{n} \frac{M_r}{W_{oi} M_{ci}} \times 100$$

If the R value is equal to or greater than the R_q value specified in paragraph (b) of this section, then compliance with § 60.442(a)(2) is demonstrated.

(d) Where compliance with the emission limit specified in § 60.442(a)(2) is achieved through the use of a solvent destruction device, the owner or operator shall determine calendar monthly compliance by comparing the monthly required overall VOC emission reduction specified in paragraph (b)(1) of this section to the overall VOC emission reduction demonstrated in the most recent performance test which complied with § 60.442(a)(2). If the monthly required overall VOC emission reduction is less than or equal to the overall VOC reduction of the most recent performance test, the affected facility is in compliance with § 60.442(a)(2).

(e) Where compliance with § 60.442(a)(2) is achieved through the use of a solvent destruction device, the owner or operator shall continuously record the destruction device combustion temperature during coating operations for thermal incineration destruction devices or the gas temperature upstream and downstream of the incinerator catalyst bed during coating operations for catalytic incineration destruction devices. For thermal incineration destruction devices the owner or operator shall record all 3-hour periods (during actual coating operations) during which the average temperature of the device is more than 28°C (50°F) below the average temperature of the device during the most recent performance test complying with § 60.442(a)(2).

For catalytic incineration destruction devices, the owner or operator shall record all 3-hour periods (during actual coating operations) during which the average temperature of the device immediately before the catalyst bed is more than 38°C (50°F) below the average temperature of the device during the most recent performance test complying with §60.442(a)(2), and all 3-hour periods (during actual coating operations) during which the average temperature difference across the catalyst bed is less than 80 percent of the average temperature difference of the device during the most recent performance test complying with §60.442(a)(2).

(f) After the initial performance test required for all affected facilities under §60.8, compliance with the VOC emission limitation and percentage reduction requirements under §60.442 is based on the average emission reduction for one calendar month. A separate compliance test is completed at the end of each calendar month after the initial performance test, and a new calendar month's average VOC emission reduction is calculated to show compliance with the standard.

(g) If a common emission control device is used to recover or destroy solvent from more than one affected facility, the performance of that control device is assumed to be equal for each of the affected facilities. Compliance with §60.442(a)(2) is determined by the methods specified in paragraphs (c) and (d) of this section and is performed simultaneously on all affected facilities.

(h) If a common emission control device is used to recover solvent from an existing facility (or facilities) as well as from an affected facility (or facilities), the overall VOC emission reduction for the affected facility (or facilities), for the purpose of compliance, shall be determined by the following procedures:

(1) The owner or operator of the existing facility (or facilities) shall determine the mass of solvent recovered for a calendar month period from the existing facility (or facilities) prior to the connection of the affected facility (or facilities) to the emission control device.

(2) The affected facility (or facilities) shall then be connected to the emission control device.

(3) The owner or operator shall determine the total mass of solvent recovered from both the existing and affected facilities over a calendar month period. The mass of solvent determined in paragraph (h)(1) of this section from the existing facility shall be subtracted from the total mass of recovered solvent to obtain the mass of solvent recovered from the affected facility (or facilities). The overall VOC emission reduction of the affected facility (or facilities) can then be determined as specified in paragraph (c) of this section.

(i) If a common emission control devices is used to destruct solvent from an existing facility (or facilities) as well as from an affected facility (or facilities), the overall VOC emission reduction for the affected facility (or facilities), for the purpose of compliance, shall be determined by the following procedures:

(1) The owner or operator shall operate the emission control device with both the existing and affected facilities connected.

(2) The concentration of VOC (in parts per million by volume) after the common emission control device shall be determined as specified in §60.444(c). This concentration is used in the calculation of compliance for both the existing and affected facilities.

(3) The volumetric flow out of the common control device attributable to the affected facility (or facilities) shall be calculated by first determining the ratio of the volumetric flow entering the common control device attributable to the affected facility (facilities) to the total volumetric flow entering the common control device from both existing and affected facilities. The multiplication of this ratio by the total volumetric flow out of the common control device yields the flow attributable to the affected facility (facilities). Compliance is determined by the use of the equation specified in §60.444(c).

(j) Startups and shutdowns are normal operation for this source category. Emissions from these operations are to be included when determining if the

standard specified at §60.442(a)(2) is being attained.

§60.444 Performance test procedures.

(a) The performance test for affected facilities complying with §60.442 without the use of add-on controls shall be identical to the procedures specified in §60.443(a).

(b) The performance test for affected facilities controlled by a solvent recovery device shall be conducted as follows:

(1) The performance test shall be a one calendar month test and not the average of three runs as specified in §60.8(f).

(2) The weighted average mass of VOC per mass of coating solids applied for a one calendar month period shall be determined as specified in §60.443(a)(1) and (2).

(3) Calculate the required percent overall VOC emission reduction as specified in §60.443(b).

(4) Inventory VOC usage and VOC recovery for a one calendar month period.

(5) Determine the percent overall VOC emission reduction as specified in §60.443(c).

(c) The performance test for affected facilities controlled by a solvent destruction device shall be conducted as follows:

(1) The performance of the solvent destruction device shall be determined by averaging the results of three test runs as specified in §60.8(f).

(2) Determine for each affected facility prior to each test run the weighted average mass of VOC per mass of coating solids applied being used at the facility. The weighted average shall be determined as specified in §60.443(a). In this application the quantities of W_{oi}, W_{si}, and M_{ci} shall be determined for the time period of each test run and not a calendar month as specified in §60.441.

(3) Calculate the required percent overall VOC emission reduction as specified in §60.443(b).

(4) Determine the percent overall VOC emission reduction of the solvent destruction device by the following equation and procedures:

$$R = \frac{\sum_{i=1}^{n} Q_{bi}C_{bi} - \sum_{j=1}^{m} Q_{aj}C_{aj}}{\sum_{i=1}^{n} Q_{bi}C_{bi} + \sum_{k=1}^{p} Q_{fk}C_{fk}} \times 100$$

(i) The owner or operator of the affected facility shall construct the overall VOC emission reduction system so that all volumetric flow rates and total VOC emissions can be accurately determined by the applicable test methods and procedures specified in §60.446(b).

(ii) The owner or operator of an affected facility shall construct a temporary total enclosure around the coating line applicator and flashoff area during the performance test for the purpose of capturing fugitive VOC emissions. If a permanent total enclosure exists in the affected facility prior to the performance test and the Administrator is satisfied that the enclosure is totally capturing fugitive VOC emissions, then no additional total enclosure will be required for the performance test.

(iii) For each affected facility where the value of R is greater than or equal to the value of R_q calculated in §60.443(b), compliance with §60.442(a)(2) is demonstrated.

§60.445 Monitoring of operations and recordkeeping.

(a) The owner or operator of an affected facility subject to this subpart shall maintain a calendar month record of all coatings used and the results of the reference test method specified in §60.446(a) or the manufacturer's formulation data used for determining the VOC content of those coatings.

(b) The owner or operator of an affected facility controlled by a solvent recovery device shall maintain a calendar month record of the amount of solvent applied in the coating at each affected facility.

(c) The owner or operator of an affected facility controlled by a solvent recovery device shall install, calibrate, maintain, and operate a monitoring device for indicating the cumulative amount of solvent recovered by the device over a calendar month period. The monitoring device shall be accurate within ±2.0 percent. The owner or operator shall maintain a calendar month

record of the amount of solvent recovered by the device.

(d) The owner or operator of an affected facility operating at the conditions specified in § 60.440(b) shall maintain a 12 month record of the amount of solvent applied in the coating at the facility.

(e) The owner or operator of an affected facility controlled by a thermal incineration solvent destruction device shall install, calibrate, maintain, and operate a monitoring device which continuously indicates and records the temperature of the solvent destruction device's exhaust gases. The monitoring device shall have an accuracy of the greater of ±0.75 percent of the temperature being measured expressed in degrees Celsius or ±2.5 °C.

(f) The owner or operator of an affected facility controlled by a catalytic incineration solvent destruction device shall install, calibrate, maintain, and operate a monitoring device which continuously indicates and records the gas temperature both upstream and downstream of the catalyst bed.

(g) The owner or operator of an affected facility controlled by a solvent destruction device which uses a hood or enclosure to capture fugitive VOC emissions shall install, calibrate, maintain, and operate a monitoring device which continuously indicates that the hood or enclosure is operating. No continuous monitor shall be required if the owner or operator can demonstrate that the hood or enclosure system is interlocked with the affected facility's oven recirculation air system.

(h) Records of the measurements required in §§ 60.443 and 60.445 must be retained for at least two years following the date of the measurements.

§ 60.446 Test methods and procedures.

(a) The VOC content per unit of coating solids applied and compliance with § 60.422(a)(1) shall be determined by either Reference Method 24 and the equations specified in § 60.443 or by manufacturers' formulation data. In the event of any inconsistency between a Method 24 test and manufacturers' formulation data, the Method 24 test will govern. The Administrator may require an owner or operator to perform Method 24 tests during such months as he deems appropriate. For Reference Method 24, the coating sample must be a one liter sample taken into a one liter container at a point where the sample will be representative of the coating applied to the web substrate.

(b) Reference Method 25 shall be used to determine the VOC concentration, in parts per million by volume, of each effluent gas stream entering and exiting the solvent destruction device or its equivalent, and each effluent gas stream emitted directly to the atmosphere. Reference Methods 1, 2, 3, and 4 shall be used to determine the sampling location, volumetric flowrate, molecular weight, and moisture of all sampled gas streams. For Reference Method 25, the sampling time for each of three runs must be at least 1 hour. The minimum sampling volume must be 0.003 dscm except that shorter sampling times or smaller volumes, when necessitated by process variables or other factors, may be approved by the Administrator.

(c) If the owner or operator can demonstrate to the Administrator's satisfaction that testing of representative stacks yields results comparable to those that would be obtained by testing all stacks, the Administrator will approve testing of representative stacks on a case-by-case basis.

§ 60.447 Reporting requirements.

(a) For all affected facilities subject to compliance with § 60.442, the performance test data and results from the performance test shall be submitted to the Administrator as specified in § 60.8(a) of the General Provisions (40 CFR part 60, subpart A).

(b) Following the initial performance test, the owner or operator of each affected facility shall submit quarterly reports to the Administrator of exceedances of the VOC emission limits specified in § 60.442. If no such exceedances occur during a particular quarter, a report stating this shall be submitted to the Administrator semiannually.

(c) The owner or operator of each affected facility shall also submit reports at the frequency specified in § 60.7(c) when the incinerator temperature drops as defined under § 60.443(e). If no

such periods occur, the owner or operator shall state this in the report.

(d) The requirements of this subsection remain in force until and unless EPA, in delegating enforcement authority to a State under section 111(c) of the Act, approves reporting requirements or an alternative means of compliance surveillance adopted by such States. In that event, affected sources within the State will be relieved of the obligation to comply with this subsection, provided that they comply with the requirements established by the State.

[48 FR 48375, Oct. 18, 1983, as amended at 55 FR 51383, Dec. 13, 1990]

Subpart SS—Standards of Performance for Industrial Surface Coating: Large Appliances

SOURCE: 47 FR 47785, Oct. 27, 1982, unless otherwise noted.

§ 60.450 Applicability and designation of affected facility.

(a) The provisions of this subpart apply to each surface coating operation in a large appliance surface coating line.

(b) The provisions of this subpart apply to each affected facility identified in paragraph (a) of this section that commences construction, modification, or reconstruction after December 24, 1980.

§ 60.451 Definitions.

(a) All terms used in this subpart not defined below are given the meaning in the Act or in subpart A of this part.

Applied coating solids means the coating solids that adhere to the surface of the large appliance part being coated.

Coating application station means that portion of the large appliance surface coating operation where a prime coat or a top coat is applied to large appliance parts or products (e.g., dip tank, spray booth, or flow coating unit).

Curing oven means a device that uses heat to dry or cure the coating(s) applied to large appliance parts or products.

Electrodeposition (EDP) means a method of coating application in which the large appliance part or product is submerged in a tank filled with coating material suspended in water and an electrical potential is used to enhance deposition of the material on the part or product.

Flashoff area means the portion of a surface coating line between the coating application station and the curing oven.

Large appliance part means any organic surface-coated metal lid, door, casing, panel, or other interior or exterior metal part or accessory that is assembled to form a large appliance product. Parts subject to in-use temperatures in excess of 250 °F are not included in this definition.

Large appliance product means any organic surface-coated metal range, oven, microwave oven, refrigerator, freezer, washer, dryer, dishwasher, water heater, or trash compactor manufactured for household, commercial, or recreational use.

Large appliance surface coating line means that portion of a large appliance assembly plant engaged in the application and curing of organic surface coatings on large appliance parts or products.

Organic coating means any coating used in a surface coating operation, including dilution solvents, from which VOC emissions occur during the application or the curing process. For the purpose of this regulation, powder coatings are not included in this definition.

Powder coating means any surface coating that is applied as a dry powder and is fused into a continuous coating film through the use of heat.

Spray booth means the structure housing automatic or manual spray application equipment where a coating is applied to large appliance parts or products.

Surface coating operation means the system on a large appliance surface coating line used to apply and dry or cure an organic coating on the surface of large appliance parts or products. The surface coating operation may be a prime coat or a topcoat operation and includes the coating application station(s), flashoff area, and curing oven.

Transfer efficiency means the ratio of the amount of coating solids deposited onto the surface of a large appliance

part or product to the total amount of coating solids used.

VOC content means the proportion of a coating that is volatile organic compounds (VOC's), expressed as kilograms of VOC's per liter of coating solids.

VOC emissions means the mass of volatile organic compounds (VOC's), expressed as kilograms of VOC's per liter of applied coating solids, emitted from a surface coating operation.

(b) All symbols used in this subpart not defined below are given the meaning in the Act or subpart A of this part.

C_a = the concentration of VOC's in a gas stream leaving a control device and entering the atmosphere (parts per million by volume, as carbon).

C_b = the concentration of VOC's in a gas stream entering a control device (parts per million by volume, as carbon).

C_f = the concentration of VOC's in a gas stream emitted directly to the atmosphere (parts per million by volume, as carbon).

D_c = density of coating (or input stream), as received (kilograms per liter).

D_d = density of a VOC-solvent added to coatings (kilograms per liter).

D_r = density of a VOC-solvent recovered by an emission control device (kilograms per liter).

E = the VOC destruction efficiency of a control device (fraction).

F = the proportion of total VOC's emitted by an affected facility that enters a control device (fraction).

G = the volume-weighted average mass of VOC's in coatings consumed in a calendar month per unit volume of applied coating solids (kilograms per liter).

L_c = the volume of coating consumed, as received (liters).

L_d = the volume of VOC-solvent added to coatings (liters).

L_r = the volume of VOC-solvent recovered by an emission control device (liters).

L_s = the volume of coating solids consumed (liters).

M_d = the mass of VOC-solvent added to coatings (kilograms).

M_o = the mass of VOC's in coatings consumed, as received (kilograms).

M_r = the mass of VOC's recovered by an emission control device (kilograms).

N = the volume-weighted average mass of VOC's emitted to the atmosphere per unit volume of applied coating solids (kilograms per liter).

Q_a = the volumetric flow rate of a gas stream leaving a control device and entering the atmosphere (dry standard cubic meters per hour).

Q_b = the volumetric flow rate of a gas stream entering a control device (dry standard cubic meters per hour).

Q_f = the volumetric flow rate of a gas stream emitted directly to the atmosphere (dry standard cubic meters per hour).

R = the overall VOC emission reduction achieved for an affected facility (fraction).

T = the transfer efficiency (fraction).

V_s = the proportion of solids in a coating (or input stream), as received (fraction by volume).

W_o = the proportion of VOC's in a coating (or input stream), as received (fraction by weight).

§ 60.452 Standard for volatile organic compounds.

On or after the date on which the performance test required by § 60.8 is completed, no owner or operator of an affected facility subject to the provisions of this supbart shall discharge or cause the discharge of VOC emissions that exceed 0.90 kilogram of VOC's per liter of applied coating solids from any surface coating operation on a large appliance surface coating line.

§ 60.453 Performance test and compliance provisions.

(a) Sections 60.8 (d) and (f) do not apply to the performance test procedures required by this subpart.

(b) The owner or operator of an affected facility shall conduct an initial performance text as required under § 60.8(a) and thereafter a performance test each calendar month for each affected facility according to the procedures in this paragraph.

(1) An owner or operator shall use the following procedures for any affected facility that does not use a capture system and control device to comply with the emissions limit specified under § 60.452. The owner or operator shall determine the composition of the coatings by formulation data supplied by the coating manufacturer or by analysis of each coating, as received, using Reference Method 24. The Administrator may require the owner or operator who uses formulation data supplied by the coating manufacturer to determine the VOC content of coatings using Reference Method 24. The owner or operator shall determine the volume of coating and the mass of VOC-solvent

used for thinning purposes from company records on a monthly basis. If a common coating distribution system serves more than one affected facility or serves both affected and existing facilities, the owner or operator shall estimate the volume of coatings used at each facility, by using the average dry weight of coating and the surface area coated by each affected and existing facility or by other procedures acceptable to the Administrator.

(i) Except as provided in paragraph (b)(1)(iv) of this section, the weighted average of the total mass of VOC's consumed per unit volume of coating solids applied each calendar month will be determined as follows.

(A) Calculate the mass of VOC's consumed ($M_o + M_d$) during the calendar month for each affected facility by the following equation:

$$M_o + M_d = \sum_{i=1}^{n} L_{ci} D_{ci} W_{oi} + \sum_{j=1}^{m} L_{dj} D_{dj}, \qquad (1)$$

($\Sigma L_{dj} D_{dj}$ will be 0 if no VOC-solvent is added to the coatings, as received)

where:

n is the number of different coatings used during the calendar month, and

m is the number of different VOC-solvents added to coatings during the calendar month.

(B) Calculate the total volume of coatings solids used (L_s) in the calendar month for each affected facility by the following equation:

$$L_s = \sum_{i=1}^{n} L_{ci} V_{si}, \qquad (2)$$

where n is the number of different coatings used during the calendar month.

(C) Select the appropriate transfer efficiency from Table 1. If the owner or operator can demonstrate to the satisfaction of the Administrator that transfer efficiencies other than those shown are appropriate, the Administrator will approve their use on a case-by-case basis. Transfer efficiencies for application methods not listed shall be determined by the Administrator on a case-by-case basis. An owner or operator must submit sufficient data for the Administrator to judge the accuracy of the transfer efficiency claims.

TABLE 1—TRANSFER EFFICIENCIES

Application method	Transfer efficiency (T_k)
Air-atomized spray	0.40
Airless spray	0.45
Manual electrostatic spray	0.60
Flow coat	0.85
Dip coat	0.85
Nonrotational automatic electrostatic spray	0.85
Rotating head automatic electrostatic spray	0.90
Electrodeposition	0.95

Where more than one application method is used within a single surface coating operation, the owner or operator shall determine the composition and volume of each coating applied by each method through a means acceptable to the Administrator and compute the weighted average transfer efficiency by the following equation:

$$T = \frac{\sum_{i=1}^{n} \sum_{k=1}^{m} L_{cjk} V_{sjk} T_k}{L_s}, \qquad (3)$$

where:

n is the number of coatings (or input streams) used, and

m is the number of application methods used.

(D) Calculate the volume-weighted average mass of VOC's consumed per unit volume of coating solids applied (G) during the calendar month for each affected facility by the following equation:

$$G = \frac{M_o + M_d}{L_s T} \qquad (4)$$

(ii) Calculate the volume-weighted average of VOC emissions to the atmosphere (N) during the calendar month for each affected facility by the following equation:

$$N = G \qquad (5)$$

(iii) Where the volume-weighted average mass of VOC's discharged to the atmosphere per unit volume of coating solids applied (N) is equal to or less than 0.90 kilogram per liter, the affected facility is in compliance.

(iv) If each individual coating used by an affected facility has a VOC content, as received, which when divided by the lowest transfer efficiency at which the coating is applied, results in a value equal to or less than 0.90 kilogram per liter, the affected facility is in compliance, provided no VOC's are added to the coating during distribution or application.

(2) An owner or operator shall use the following procedures for any affected facility that uses a capture system and a control device that destroys VOC's (e.g., incinerator) to comply with the emission limit specified under §60.452.

(i) Determine the overall reduction efficiency (R) for the capture system and control device. For the initial performance test the overall reduction efficiency (R) shall be determined as prescribed in A, B, and C below. In subsequent months, the owner or operator may use the most recently determined overall reduction efficiency (R) for the performance test, providing control device and capture system operating conditions have not changed. The procedure in A, B, and C, below, shall be repeated when directed by the Administrator or when the owner or operator elects to operate the control device or capture system at conditions different from the initial performance test.

(A) Determine the fraction (F) of total VOC's emitted by an affected facility that enters the control device using the following equation:

$$E = \frac{\sum_{i=1}^{n} Q_{bi} C_{bi} - \sum_{j=1}^{m} Q_{aj} C_{aj}}{\sum_{i=1}^{n} Q_{bi} C_{bi}} \qquad (6)$$

where:

n is the number of gas streams entering the control device

p is the number of gas streams emitted directly to the atmosphere.

(B) Determine the destruction efficiency of the control device (E) using values of the volumetric flow rate of each of the gas streams and the VOC content (as carbon) of each of the gas streams in and out of the device by the following equation:

$$F = \frac{\sum_{i=1}^{n} C_{bi} Q_{bi}}{\sum_{i=1}^{n} C_{bi} Q_{bi} + \sum_{k=1}^{p} C_{fk} Q_{fk}}, \qquad (7)$$

where:

n is the number of gas streams entering the control device, and

m is the number of gas streams leaving the control device and entering the atmosphere.

(C) Determine overall reduction efficiency (R) using the following equation:

$$R = EF \qquad (8)$$

(ii) Calculate the volume-weighted average of the total mass of VOC's per unit volume of applied coating solids (G) during each calendar month for each affected facility using equations (1), (2), (3) if applicable, and (4).

(iii) Calculate the volume-weighted average of VOC emissions to the atmosphere (N) during each calendar month by the following equation:

$$N = G(1 - R) \qquad (9)$$

(iv) If the volume-weighted average mass of VOC's emitted to the atmosphere for each calendar month (N) is equal to or less than 0.90 kilogram per liter of applied coating solids, the affected facility is in compliance.

(3) An owner or operator shall use the following procedure for any affected facility that uses a control device for VOC recovery (e.g., carbon adsorber) to comply with the applicable emission limit specified under §60.452.

(i) Calculate the total mass of VOC's assumed (M_o+M_d) and the volume-weighted average of the total mass of

VOC's per unit volume of applied coating solids (G) during each calendar month for each affected facility using equations (1), (2), (3) if applicable, and (4).

(ii) Calculate the total mass of VOC's recovered (M_r) during each calendar month using the following equation:

$$M_r = L_r D_r \qquad (10)$$

(iii) Calculate overall reduction efficiency of the control device (R) for each calendar month for each affected facility using the following equation:

$$R = \frac{M_r}{M_o + M_d} \qquad (11)$$

(iv) Calculate the volume-weighted average mass of VOC's emitted to the atmosphere (N) for each calendar month for each affected facility using equation (9).

(v) If the volume-weighted average mass of VOC's emitted to the atmosphere for each calendar month (N) is equal to or less than 0.90 kilogram per liter of applied coating solids, the affected facility is in compliance. Each monthly calculation is considered a performance test.

§ 60.454 Monitoring of emissions and operations.

(a) The owner or operator of an affected facility that uses a capture system and an incinerator to comply with the emission limits specified under § 60.452 shall install, calibrate, maintain, and operate temperature measurement devices as prescribed below:

(1) Where thermal incineration is used, a temperature measurement device shall be installed in the firebox. Where catalytic incineration is used, a temperature measurement device shall be installed in the gas stream immediately before and after the catalyst bed.

(2) Each temperature measurement device shall be installed, calibrated, and maintained according to the manufacturer's specifications. The device shall have an accuracy of the greater of 0.75 percent of the temperature being measured expressed in degrees Celsius or ±2.5 °C.

(3) Each temperature measurement device shall be equipped with a recording device so that a permanent continuous record is produced.

§ 60.455 Reporting and recordkeeping requirements.

(a) The reporting requirements of §60.8(a) apply only to the initial performance test. Each owner or operator subject to the provisions of this subpart shall include the following data in the report of the initial performance test required under § 60.8(a):

(1) Except as provided in paragraph (a)(2) of this section, the volume-weighted average mass of VOC's emitted to the atmosphere per volume of applied coating solids (N) for a period of 1 calendar month from each affected facility.

(2) For each affected facility where compliance is determined under the provisions of § 60.453(b)(1)(iv), a list of the coatings used during a period of 1 calendar month, the VOC content of each coating calculated from data determined using Reference Method 24 or supplied by the coating manufacturer, and the minimum transfer efficiency of any coating application equipment used during the month.

(3) For each affected facility where compliance is achieved through use of an incineration system, the following additional information will be reported:

(i) The proportion of total VOC's emitted that enters the control device (F),

(ii) The VOC reduction efficiency of the control device (E),

(iii) The average combustion temperature (or the average temperature upstream and downstream of the catalyst bed), and

(iv) A description of the method used to establish the amount of VOC's captured and sent to the incinerator.

(4) For each affected facility where compliance is achieved through use of a solvent recovery system, the following additional information will be reported:

(i) The volume of VOC-solvent recovered (L_r), and

(ii) The overall VOC emission reduction achieved (R).

(b) Following the initial performance test, the owner or operator of an affected facility shall identify, record,

and submit a written report to the Administrator every calendar quarter of each instance in which the volume-weighted average of the total mass of VOC's emitted to the atmosphere per volume of applied coating solids (N) is greater than the limit specified under § 60.452. If no such instances have occurred during a particular quarter, a report stating this shall be submitted to the Administrator semiannually.

(c) Following the initial performance test, the owner or operator of an affected facility shall identify, record, and submit at the frequency specified in § 60.7(c) the following:

(1) Where compliance with § 60.452 is achieved through use of thermal incineration, each 3-hour period of coating operation during which the average temperature of the device was more than 28 °C below the average temperature of the device during the most recent performance test at which destruction efficiency was determined as specified under § 60.453.

(2) Where compliance with § 60.452 is achieved through the use of catalytic incineration, each 3-hour period of coating operation during which the average temperature recorded immediately before the catalyst bed is more than 28 °C below the average temperature at the same location during the most recent performance test at which destruction efficiency was determined as specified under § 60.453. Additionally, all 3-hour periods of coating operation during which the average temperature difference across the catalyst bed is less than 80 percent of the average temperature difference across the catalyst bed during the most recent performance test at which destruction efficiency was determined as specified under § 60.453 will be recorded.

(3) For thermal and catalytic incinerators, if no such periods as described in paragraphs (c)(1) and (c)(2) of this section occur, the owner or operator shall state this in the report.

(d) Each owner or opreator subject to the provisions of this subpart shall maintain at the source, for a period of at least 2 years, records of all data and calculations used to determine VOC emissions from each affected facility. Where compliance is achieved through the use of thermal incineration, each owner or operator shall maintain at the source daily records of the incinerator combustion chamber temperature. If catalytic incineration is used, the owner or operator shall maintain at the source daily records of the gas temperature, both upstream and downstream of the incinerator catalyst bed. Where compliance is achieved through the use of a solvent recovery system, the owner or operator shall maintain at the source daily records of the amount of solvent recovered by the system for each affected facility.

[47 FR 47785, Oct. 27, 1982, as amended at 55 FR 51383, Dec. 13, 1990]

§ 60.456 Test methods and procedures.

(a) The reference methods in Appendix A to this part, except as provided under § 60.8(b), shall be used to determine compliance with § 60.452 as follows:

(1) Method 24 or formulation data supplied by the coating manufacturer to determine the VOC content of a coating. In the event of dispute, Reference Method 24 shall be the reference method. For determining compliance only, results of Method 24 analyses of waterborne coatings shall be adjusted as described in subsection 4.4 of Method 24. Procedures to determine VOC emissions are provided in § 60.453.

(2) Method 25 for the measurement of the VOC concentration in the gas stream vent.

(3) Method 1 for sample and velocity traverses.

(4) Method 2 for volocity and volumetric flow rate.

(5) Method 3 for gas analysis.

(6) Method 4 for stack gas moisture.

(b) For Method 24, the coating sample must be a 1-liter sample taken into a 1-liter container at a point where the sample will be representative of the coating material.

(c) For Method 25, the sample time for each of three runs is to be at least 60 minutes and the minimum sample volume is to be at least 0.003 dscm except that shorter sampling times or smaller volumes, when necessitated by process variables or other factors, may be approved by the Administrator.

(d) The Administrator will approve sampling of representative stacks on a

case-by-case basis if the owner or operator can demonstrate to the satisfaction of the Administrator that the testing of representative stacks would yield results comparable to those that would be obtained by testing all stacks.

Subpart TT—Standards of Performance for Metal Coil Surface Coating

SOURCE: 47 FR 49612, Nov. 1, 1982, unless otherwise noted.

§ 60.460 Applicability and designation of affected facility.

(a) The provisions of this subpart apply to the following affected facilities in a metal coil surface coating operation: each prime coat operation, each finish coat operation, and each prime and finish coat operation combined when the finish coat is applied wet on wet over the prime coat and both coatings are cured simultaneously.

(b) This subpart applies to any facility identified in paragraph (a) of this section that commences construction, modification, or reconstruction after January 5, 1981.

§ 60.461 Definitions.

(a) All terms used in this subpart not defined below are given the same meaning as in the Act or in subpart A of this part.

Coating means any organic material that is applied to the surface of metal coil.

Coating application station means that portion of the metal coil surface coating operation where the coating is applied to the surface of the metal coil. Included as part of the coating application station is the flashoff area between the coating application station and the curing oven.

Curing oven means the device that uses heat or radiation to dry or cure the coating applied to the metal coil.

Finish coat operation means the coating application station, curing oven, and quench station used to apply and dry or cure the final coating(s) on the surface of the metal coil. Where only a single coating is applied to the metal coil, that coating is considered a finish coat.

Metal coil surface coating operation means the application system used to apply an organic coating to the surface of any continuous metal strip with thickness of 0.15 millimeter (mm) (0.006 in.) or more that is packaged in a roll or coil.

Prime coat operation means the coating application station, curing oven, and quench station used to apply and dry or cure the initial coating(s) on the surface of the metal coil.

Quench station means that portion of the metal coil surface coating operation where the coated metal coil is cooled, usually by a water spray, after baking or curing.

VOC content means the quantity, in kilograms per liter of coating solids, of volatile organic compounds (VOC's) in a coating.

(b) All symbols used in this subpart not defined below are given the same meaning as in the Act and in subpart A of this part.

C_a= the VOC concentration in each gas stream leaving the control device and entering the atmosphere (parts per million by volume, as carbon).

C_b= the VOC concentration in each gas stream entering the control device (parts per million by volume, as carbon).

C_f= the VOC concentration in each gas steam emitted directly to the atmosphere (parts per million by volume, as carbon).

D_c= density of each coating, as received (kilograms per liter).

D_d= density of each VOC-solvent added to coatings (kilograms per liter).

D_r= density of VOC-solvent recovered by an emission control device (kilograms per liter).

E= VOC destruction efficiency of the control device (fraction).

F= the proportion of total VOC's emitted by an affected facility that enters the control device (fraction).

G= volume-weighted average mass of VOC's in coatings consumed in a calendar month per unit volume of coating solids applied (kilograms per liter).

L_c= the volume of each coating consumed, as received (liters).

L_d= the volume of each VOC-solvent added to coatings (liters).

L_r= the volume of VOC-solvent recovered by an emission control device (liters).

L_s= the volume of coating solids consumed (liters).

M_d= the mass of VOC-solvent added to coatings (kilograms).

M_o= the mass of VOC's in coatings consumed, as received (kilograms).
M_r= the mass of VOC's recovered by an emission control device (kilograms).
N= the volume-weighted average mass of VOC emissions to the atmosphere per unit volume of coating solids applied (kilograms per liter).
Q_a= the volumetric flow rate of each gas stream leaving the control device and entering the atmosphere (dry standard cubic meters per hour).
Q_b= the volumetric flow rate of each gas stream entering the control device (dry standard cubic meters per hour).
Q_f= the volumetric flow rate of each gas steam emitted directly to the atmosphere (dry standard cubic meters per hour).
R= the overall VOC emission reduction achieved for an affected facility (fraction).
S= the calculated monthly allowable emission limit (kilograms of VOC per liter of coating solids applied).
V_s= the proportion of solids in each coating, as received (fraction by volume).
W_o= the proportion of VOC's in each coating, as received (fraction by weight).

§ 60.462 Standards for volatile organic compounds.

(a) On and after the date on which § 60.8 requires a performance test to be completed, each owner or operator subject to this subpart shall not cause to be discharged into the atmosphere more than:

(1) 0.28 kilogram VOC per liter (kg VOC/*l*) of coating solids applied for each calendar month for each affected facility that does not use an emission control device(s); or

(2) 0.14 kg VOC/*l* of coating solids applied for each calendar month for each affected facility that continuously uses an emission control device(s) operated at the most recently demonstrated overall efficiency; or

(3) 10 percent of the VOC's applied for each calendar month (90 percent emission reduction) for each affected facility that continuously uses an emission control device(s) operated at the most recently demonstrated overall efficiency; or

(4) A value between 0.14 (or a 90-percent emission reduction) and 0.28 kg VOC/*l* of coating solids applied for each calendar month for each affected facility that intermittently uses an emission control device operated at the most recently demonstrated overall efficiency.

§ 60.463 Performance test and compliance provisions.

(a) Section 60.8(d) and (f) do not apply to the performance test.

(b) The owner or operator of an affected facility shall conduct an initial performance test as required under § 60.8(a) and thereafter a performance test for each calendar month for each affected facility according to the procedures in this section.

(c) The owner or operator shall use the following procedures for determining monthly volume-weighted average emissions of VOC's in kg/*l* of coating solids applied.

(1) An owner or operator shall use the following procedures for each affected facility that does not use a capture system and control device to comply with the emission limit specified under § 60.462(a)(1). The owner or operator shall determine the composition of the coatings by formulation data supplied by the manufacturer of the coating or by an analysisof each coating, as received, using Reference Method 24. The Administrator may require the owner or operator who uses formulation data supplied by the manufacturer of the coatings to determine the VOC content of coatings using Reference Method 24 or an equivalent or alternative method. The owner or operator shall determine the volume of coating and the mass of VOC-solvent added to coatings from company records on a monthly basis. If a common coating distribution system serves more than one affected facility or serves both affected and existing facilities, the owner or operator shall estimate the volume of coating used at each affected facility by using the average dry weight of coating and the surface area coated by each affected and existing facility or by other procedures acceptable to the Administrator.

(i) Calculate the volume-weighted average of the total mass of VOC's consumed per unit volume of coating solids applied during each calendar month for each affected facility, except as provided under paragraph (c)(1)(iv) of this section. The weighted average of the total mass of VOC's used per unit volume of coating solids applied each

calendar month is determined by the following procedures.

(A) Calculate the mass of VOC's used (Mo+Md) during each calendar month for each affected facility by the following equation:

$$M_o + M_d = \sum_{i=1}^{n} L_{ci} D_{ci} W_{oi} + \sum_{j=1}^{m} L_{dj} D_{dj} \qquad \text{Equation 1}$$

($\Sigma L_{dj} D_{dj}$ will be 0 if no VOC solvent is added to the coatings, as received)

where

n is the number of different coatings used during the calendar month, and

m is the number of different VOC solvents added to coatings used during the calendar month.

(B) Calculate the total volume of coating solids used (L_s) in each calendar month for each affected facility by the following equation:

$$L_s = \sum_{i=1}^{n} V_{si} L_{ci} \qquad \text{Equation 2}$$

Where:

n is the number of different coatings used during the calendar month.

(C) Calculate the volume-weighted average mass of VOC's used per unit volume of coating solids applied (G) during the calendar month for each affected facility by the following equation:

$$G = \frac{M_o + M_d}{L_s} \qquad \text{Equation 3}$$

(ii) Calculate the volume-weighted average of VOC emissions to the atmosphere (N) during the calendar month for each affected facility by the following equation:

$$N = G \qquad \text{Equation 4}$$

(iii) Where the volume-weighted average mass of VOC's discharged to the atmosphere per unit volume of coating solids applied (N) is equal to or less than 0.28 kg/*l*, the affected facility is in compliance.

(iv) If each individual coating used by an affected facility has a VOC content, as received, that is equal to or less than 0.28 kg/*l* of coating solids, the affected facility is in compliance provided no VOC's are added to the coatings during distribution or application.

(2) An owner or operator shall use the following procedures for each affected facility that continuously uses a capture system and a control device that destroys VOC's (e.g., incinerator) to comply with the emission limit specified under § 60.462(a) (2) or (3).

(i) Determine the overall reduction efficiency (R) for the capture system and control device.

For the initial performance test, the overall reduction efficiency (R) shall be determined as prescribed in paragraphs (c)(2)(i) (A), (B), and (C) of this section. In subsequent months, the owner or operator may use the most recently determined overall reduction efficiency (R) for the performance test, providing control device and capture system operating conditions have not changed. The procedure in paragraphs (c)(2)(i) (A), (B), and (C) of this section, shall be repeated when directed by the Administrator or when the owner or operator elects to operate the control device or capture system at conditions different from the initial performance test.

(A) Determine the fraction (F) of total VOC's emitted by an affected facility that enters the control device using the following equation:

$$F = \frac{\sum_{i=1}^{l} C_{bi} Q_{bi}}{\sum_{i=1}^{l} C_{bi} Q_{bi} + \sum_{i=1}^{p} C_{fi} Q_{fi}}$$

Equation 5

Where:

l is the number of gas streams entering the control device, and

p is the number of gas streams emitted directly to the atmosphere.

(B) Determine the destruction efficiency of the control device (E) using

values of the volumetric flow rate of each of the gas streams and the VOC content (as carbon) of each of the gas streams in and out of the device by the following equation:

$$E = \frac{\sum_{i=1}^{n} Q_{bi} C_{bi} - \sum_{j=1}^{m} Q_{aj} C_{aj}}{\sum_{i=1}^{n} Q_{bi} C_{bi}}$$

Equation 6

Where:

n is the number of gas streams entering the control device, and

m is the number of gas streams leaving the control device and entering the atmosphere.

The owner or operator of the affected facility shall construct the VOC emission reduction system so that all volumetric flow rates and total VOC emissions can be accurately determined by the applicable test methods and procedures specified in § 60.466. The owner or operator of the affected facility shall construct a temporary enclosure around the coating applicator and flashoff area during the performance test for the purpose of evaluating the capture efficiency of the system. The enclosure must be maintained at a negative pressure to ensure that all VOC emissions are measurable. If a permanent enclosure exists in the affected facility prior to the performance test and the Administrator is satisfied that the enclosure is adequately containing VOC emissions, no additional enclosure is required for the performance test.

(C) Determine overall reduction efficiency (R) using the following equation:

$$R = EF \qquad \text{Equation 7}$$

If the overall reduction efficiency (R) is equal to or greater than 0.90, the affected facility is in compliance and no further computations are necessary. If the overall reduction efficiency (R) is less than 0.90, the average total VOC emissions to the atmosphere per unit volume of coating solids applied (N) shall be computed as follows.

(ii) Calculate the volume-weighted average of the total mass of VOC's per unit volume of coating solids applied (G) during each calendar month for each affected facility using equations in paragraphs (c)(1)(i) (A), (B), and (C) of this section.

(iii) Calculate the volume-weighted average of VOC emissions to the atmosphere (N) during each calendar month by the following equation:

$$N = G(1 - R) \qquad \text{Equation 8}$$

(iv) If the volume-weighted average mass of VOC's emitted to the atmosphere for each calendar month (N) is less than or equal to 0.14 kg/*l* of coating solids applied, the affected facility is in compliance. Each monthly calculation is a performance test.

(3) An owner or operator shall use the following procedure for each affected facility that uses a control device that recovers the VOC's (e.g., carbon adsorber) to comply with the applicable emission limit specified under § 60.462(a) (2) or (3).

(i) Calculate the total mass of VOC's consumed (M_o+M_d) during each calendar month for each affected facility using equation (1).

(ii) Calculate the total mass of VOC's recovered (M_r) during each calendar month using the following equation:

$$M_r = L_r D_r \qquad \text{Equation 9}$$

(iii) Calculate the overall reduction efficiency of the control device (R) for each calendar month for each affected facility using the following equation:

$$R = \frac{M_r}{M_o + M_d} \qquad \text{Equation 10}$$

If the overall reduction efficiency (R) is equal to or greater than 0.90, the affected facility is in compliance and no further computation are necessary. If the overall reduction efficiency (R) is less than 0.90, the average total VOC emissions to the atmosphere per unit volume of coating solids applied (N) must be computed as follows.

(iv) Calculate the total volume of coating solids consumed (L_s) and the volume-weighted average of the total mass of VOC's per unit volume of coating solids applied (G) during each calendar month for each affected facility using equations in paragraphs (c)(1)(i) (B) and (C) of this section.

(v) Calculate the volume-weighted average mass of VOC's emitted to the

atmosphere (N) for each calendar month for each affected facility using equation (8).

(vi) If the weighted average mass of VOC's emitted to the atmosphere for each calendar month (N) is less than or equal to 0.14 kg/*l* of coating solids applied, the affected facility is in compliance. Each monthly calculation is a performance test.

(4) An owner or operator shall use the following procedures for each affected facility that intermittently uses a capture system and a control device to comply with the emission limit specified in § 60.462(a)(4).

(i) Calculate the total volume of coating solids applied without the control device in operation (L_{sn}) during each calendar month for each affected facility using the following equation:

$$L_{sn} = \sum_{i-1}^{n} V_{si} L_{ci} \qquad \text{Equation 11}$$

Where:

n is the number of coatings used during the calendar month without the control device in operation.

(ii) Calculate the total volume of coating solids applied with the control device in operation (L_{sc}) during each calendar month for each affected facility using the following equation:

$$L_{sc} = \sum_{i-1}^{n} V_{si} L_{ci} \qquad \text{Equation 12}$$

Where:

m is the number of coatings used during the calendar month with the control device in operation.

(iii) Calculate the mass of VOC's used without the control device in operation ($M_{on}+M_{dn}$) during each calendar month for each affected facility using the following equation:

$$M_{on} + M_{dn} + \sum_{i=1}^{n} L_{ci} D_{ci} W_{oi} + \sum_{j=1}^{m} L_{dj} D_{dj} \qquad \text{Equation 13}$$

Where:

n is the number of different coatings used without the control device in operation during the calendar month, and

m is the number of different VOC-solvents added to coatings used without the control device in operation during the calendar month.

(iv) Calculate the volume-weighted average of the total mass of VOC's consumed per unit volume of coating solids applied without the control device in operation (G_n) during each calendar month for each affected facility using the following equation:

$$G_n = \frac{M_{on} + M_{dn}}{L_{sn}} \qquad \text{Equation 14}$$

(v) Calculate the mass of VOC's used with the control device in operation ($M_{oc}+M_{dc}$) during each calendar month for each affected facility using the following equation:

$$M_{oc} + M_{dc} = \sum_{i=1}^{n} L_{ci} D_{ci} W_{oi} + \sum_{i=1}^{m} L_{dj} D_{dj} \qquad \text{Equation 15}$$

Where:

n is the number of different coatings used with the control device in operation during the calendar month, and

m is the number of different VOC-solvents added to coatings used with the control device in operation during the calendar month.

(vi) Calculate the volume-weighted average of the total mass of VOC's used

per unit volume of coating solids applied with the control device in operation (G_c) during each calendar month for each affected facility using the following equation:

$$G = \frac{M_{oc} + M_{dc}}{L_{sn}} \qquad \text{Equation 16}$$

(vii) Determine the overall reduction efficiency (R) for the capture system and control device using the procedures in paragraphs (c)(2)(i) (A), (B), and (C) or paragraphs (c)(3) (i), (ii), and (iii) of this section, whichever is applicable.

(viii) Calculate the volume-weighted average of VOC emissions to the atmosphere (N) during each calendar month for each affected facility using the following equation:

$$N = \frac{G_n L_{sn} + G_c L_{sc}(1-R)}{L_{sn} + L_{sc}} \qquad \text{Equation 17}$$

Equation 17

(ix) Calculate the emission limit(s) for each calendar month for each affected facility using the following equation:

$$S = \frac{0.28\ L_{sn} + 0.1\ G_c L_{sc}}{L_{ns} + L_{sc}}$$

or

$$\frac{0.28\ L_{sn} + 0.14\ L_{sc}}{L_{sn} + L_{sc}} \qquad \text{Equation 18}$$

whichever is greater.

(x) If the volume-weighted average mass of VOC's emitted to the atmosphere for each calendar month (N) is less than or equal to the calculated emission limit (S) for the calendar month, the affected facility is in compliance. Each monthly calculation is a performance test.

[47 FR 49612, Nov. 1, 1982; 48 FR 1056, Jan. 10, 1983]

§ 60.464 Monitoring of emissions and operations.

(a) Where compliance with the numerical limit specified in § 60.462(a) (1) or (2) is achieved through the use of low VOC-content coatings without the use of emission control devices or through the use of higher VOC-content coatings in conjunction with emission control devices, the owner or operator shall compute and record the average VOC content of coatings applied during each calendar month for each affected facility, according to the equations provided in § 60.463.

(b) Where compliance with the limit specified in § 60.462(a)(4) is achieved through the intermittent use of emission control devices, the owner or operator shall compute and record for each affected facility the average VOC content of coatings applied during each calendar month according to the equations provided in § 60.463.

(c) If thermal incineration is used, each owner or operator subject to the provisions of this subpart shall install, calibrate, operate, and maintain a device that continuously records the combustion temperature of any effluent gases incinerated to achieve compliance with § 60.462(a)(2), (3), or (4). This device shall have an accuracy of ±2.5 °C. or ±0.75 percent of the temperature being measured expressed in degrees Celsius, which is greater. Each owner or operator shall also record all periods (during actual coating operations) in excess of 3 hours during which the average temperature in any thermal incinerator used to control emissions from an affected facility remains more than 28 °C (50 °F) below the temperature at which compliance with § 60.462(a)(2), (3), or (4) was demonstrated during the most recent measurement of incinerator efficiency required by § 60.8. The records required by § 60.7 shall identify each such occurrence and its duration. If catalytic incineration is used, the owner or operator shall install, calibrate, operate, and maintain a device to monitor and

record continuously the gas temperature both upstream and downstream of the incinerator catalyst bed. This device shall have an accuracy of ±2.5 °C. or ±0.75 percent of the temperature being measured expressed in degrees Celsius, whichever is greater. During coating operations, the owner or operator shall record all periods in excess of 3 hours where the average difference between the temperature upstream and downstream of the incinerator catalyst bed remains below 80 percent of the temperature difference at which compliance was demonstrated during the most recent measurement of incinerator efficiency or when the inlet temperature falls more than 28 °C (50 °F) below the temperature at which compliance with §60.462(a)(2), (3), or (4) was demonstrated during the most recent measurement of incinerator efficiency required by §60.8. The records required by §60.7 shall identify each such occurrence and its duration.

[47 FR 49612, Nov. 1, 1982; 48 FR 1056, Jan. 10, 1983]

§60.465 Reporting and recordkeeping requirements.

(a) Where compliance with the numerical limit specified in §60.462(a) (1), (2), or (4) is achieved through the use of low VOC-content coatings without emission control devices or through the use of higher VOC-content coatings in conjunction with emission control devices, each owner or operator subject to the provisions of this subpart shall include in the initial compliance report required by §60.8 the weighted average of the VOC content of coatings used during a period of one calendar month for each affected facility. Where compliance with §60.462(a)(4) is achieved through the intermittent use of a control device, reports shall include separate values of the weighted average VOC content of coatings used with and without the control device in operation.

(b) Where compliance with §60.462(a)(2), (3), or (4) is achieved through the use of an emission control device that destroys VOC's, each owner or operator subject to the provisions of this subpart shall include the following data in the initial compliance report required by §60.8:

(1) The overall VOC destruction rate used to attain compliance with §60.462(a)(2), (3), or (4) and the calculated emission limit used to attain compliance with §60.462(a)(4); and

(2) The combustion temperature of the thermal incinerator or the gas temperature, both upstream and downstream of the incinerator catalyst bed, used to attain compliance with §60.462(a)(2), (3), or (4).

(c) Following the initial performance test, the owner or operator of an affected facility shall identify, record, and submit a written report to the Administrator every calendar quarter of each instance in which the volume-weighted average of the local mass of VOC's emitted to the atmosphere per volume of applied coating solids (N) is greater than the limit specified under §69.462. If no such instances have occurred during a particular quarter, a report stating this shall be submitted to the Administrator semiannually.

(d) The owner or operator of each affected facility shall also submit reports at the frequency specified in §60.7(c) when the incinerator temperature drops as defined under §69.464(c). If no such periods occur, the owner or operator shall state this in the report.

(e) Each owner or operator subject to the provisions of this subpart shall maintain at the source, for a period of at least 2 years, records of all data and calculations used to determine monthly VOC emissions from each affected facility and to determine the monthly emission limit, where applicable. Where compliance is achieved through the use of thermal incineration, each owner or operator shall maintain, at the source, daily records of the incinerator combustion temperature. If catalytic incineration is used, the owner or operator shall maintain at the source daily records of the gas temperature, both upstream and downstream of the incinerator catalyst bed.

[47 FR 49612, Nov. 1, 1982, as amended at 55 FR 51383, Dec. 13, 1990; 56 FR 20497, May 3, 1991]

§60.466 Test methods and procedures.

(a) The reference methods in appendix A to this part, except as provided

under §60.8(b), shall be used to determine compliance with §60.462 as follows:

(1) Reference Method 24, or data provided by the formulator of the coating for determining the VOC content of each coating as applied to the surface of the metal coil. In the event of a dispute, Reference Method 24 shall be the reference method. When VOC content of waterborne coatings, determined by Reference Method 24, is used to determine compliance of affected facilities, the results of the Reference Method 24 analysis shall be adjusted as described in section 4.4 of Reference Method 24;

(2) Reference Method 25, both for measuring the VOC concentration in each gas stream entering and leaving the control device on each stack equipped with an emission control device and for measuring the VOC concentration in each gas stream emitted directly to the atmosphere;

(3) Method 1 for sample and velocity traverses;

(4) Method 2 for velocity and volumetric flow rate;

(5) Method 3 for gas analysis; and

(6) Method 4 for stack gas moisture.

(b) For Method 24, the coating sample must be at least a 1-liter sample taken at a point where the sample will be representative of the coating as applied to the surface of the metal coil.

(c) For Method 25, the sampling time for each of three runs is to be at least 60 minutes, and the minimum sampling volume is to be at least 0.003 dry standard cubic meter (DSCM); however, shorter sampling times or smaller volumes, when necessitated by process variables or other factors, may be approved by the Administrator.

(d) The Administrator will approve testing of representative stacks on a case-by-case basis if the owner or operator can demonstrate to the satisfaction of the Administrator that testing of representative stacks yields results comparable to those that would be obtained by testing all stacks.

[47 FR 49612, Nov. 1, 1982, as amended at 51 FR 22938, June 24, 1986]

Subpart UU—Standards of Performance for Asphalt Processing and Asphalt Roofing Manufacture

SOURCE: 47 FR 34143, Aug. 6, 1982, unless otherwise noted.

§ 60.470 Applicability and designation of affected facilities.

(a) The affected facilities to which this subpart applies are each saturator and each mineral handling and storage facility at asphalt roofing plants; and each asphalt storage tank and each blowing still at asphalt processing plants, petroleum refineries, and asphalt roofing plants.

(b) Any saturator or mineral handling and storage facility under paragraph (a) of this section that commences construction or modification after November 18, 1980, is subject to the requirements of this subpart. Any asphalt storage tank or blowing still that processes and/or stores asphalt used for roofing only or for roofing and other purposes, and that commences construction or modification after November 18, 1980, is subject to the requirements of this subpart.

Any asphalt storage tank or blowing still that processes and/or stores only nonroofing asphalts and that commences construction or modification after May 26, 1981, is subject to the requirements of this subpart.

§ 60.471 Definitions.

As used in this subpart, all terms not defined herein shall have the meaning given them in the Act and in subpart A of this part.

Afterburner (A/B) means an exhaust gas incinerator used to control emissions of particulate matter.

Asphalt processing means the storage and blowing of asphalt.

Asphalt processing plant means a plant which blows asphalt for use in the manufacture of asphalt products.

Asphalt roofing plant means a plant which produces asphalt roofing products (shingles, roll roofing, siding, or saturated felt).

Asphalt storage tank means any tank used to store asphalt at asphalt roofing plants, petroleum refineries, and asphalt processing plants. Storage tanks containing cutback asphalts (asphalts diluted with solvents to reduce viscosity for low temperature applications) and emulsified asphalts (asphalts dispersed in water with an emulsifying agent) are not subject to this regulation.

Blowing still means the equipment in which air is blown through asphalt flux to change the softening point and penetration rate.

Catalyst means means a substance which, when added to asphalt flux in a blowing still, alters the penetrating-softening point relationship or increases the rate of oxidation of the flux.

Coating blow means the process in which air is blown through hot asphalt flux to produce coating asphalt. The coating blow starts when the air is turned on and stops when the air is turned off.

Electrostatic precipitator (ESP) means an air pollution control device in which solid or liquid particulates in a gas stream are charged as they pass through an electric field and precipitated on a collection suface.

High velocity air filter (HVAF) means an air pollution control filtration device for the removal of sticky, oily, or liquid aerosol particulate matter from exhaust gas streams.

Mineral handling and storage facility means the areas in asphalt roofing plants in which minerals are unloaded from a carrier, the conveyor transfer points between the carrier and the storage silos, and the storage silos.

Saturator means the equipment in which asphalt is applied to felt to make asphalt roofing products. The term saturator includes the saturator, wet looper, and coater.

§ 60.472 Standards for particulate matter.

(a) On and after the date on which § 60.8(b) requires a performance test to be completed, no owner or operator subject to the provisions of this subpart shall cause to be discharged into the atmosphere from any saturator:

(1) Particulate matter in excess of: (i) 0.04 kilograms of particulate per megagram of asphalt shingle or mineral-surfaced roll roofing produced, or (ii) 0.4 kilograms per megagram of saturated felt or smooth-surfaced roll roofing produced;

(2) Exhaust gases with opacity greater than 20 percent; and

(3) Any visible emissions from a saturator capture system for more than 20 percent of any period of consecutive valid observations totaling 60 minutes. Saturators that were constructed before November 18, 1980, and that have not been reconstructed since that date and that become subject to these standards through modification are exempt from the visible emissions standard. Saturators that have been newly constructed or reconstructed since November 18, 1980 are subject to the visible emissions standard.

(b) On and after the date on which § 60.8(b) requires a performance test to be completed, no owner or operator subject to the provisions of this subpart shall cause to be discharged into the atmosphere from any blowing still:

(1) Particulate matter in excess of 0.67 kilograms of particulate per megagram of asphalt charged to the still when a catalyst is added to the still; and

(2) Particulate matter in excess of 0.71 kilograms of particulate per megagram of asphalt charged to the still when a catalyst is added to the still and when No. 6 fuel oil is fired in the afterburner; and

(3) Particulate matter in excess of 0.60 kilograms of particulate per megagram of asphalt charged to the still during blowing without a catalyst; and

(4) Particulate matter in excess of 0.64 kilograms of particulate per megagram of asphalt charged to the still during blowing without a catalyst and when No. 6 fuel oil is fired in the afterburner; and

(5) Exhaust gases with an opacity greater than 0 percent unless an opacity limit for the blowing still when fuel oil is used to fire the afterburner has been established by the Administrator in accordance with the procedures in § 60.474(k).

(c) Within 60 days after achieving the maximum production rate at which the affected facility will be operated, but not later than 180 days after initial startup of such facility, no owner or operator subject to the provisions of this subpart shall cause to be discharged into the atmosphere from any asphalt storage tank exhaust gases with opacity greater than 0 percent, except for one consecutive 15-minute period in any 24-hour period when the transfer lines are being blown for clearing. The control device shall not be bypassed during this 15-minute period. If, however, the emissions from any asphalt storage tank(s) are ducted to a control device for a saturator, the combined emissions shall meet the emission limit contained in paragraph (a) of this section during the time the saturator control device is operating. At any other time the asphalt storage tank(s) must meet the opacity limit specified above for storage tanks.

(d) Within 60 days after achieving the maximum production rate at which the affected facility will be operated, but not later than 180 days after initial startup of such facility, no owner or operator subject to the provisions of this subpart shall cause to be discharged into the atmosphere from any mineral handling and storage facility emissions with opacity greater than 1 percent.

§ 60.473 Monitoring of operations.

(a) The owner or operator subject to the provisions of this subpart, and using either an electrostatic precipitator or a high velocity air filter to meet the emission limit in § 60.472(a)(1) and/or (b)(1) shall continuously monitor and record the temperature of the gas at the inlet of the control device. The temperature monitoring instrument shall have an accuracy of ±15 °C over its range.

(b) The owner or operator subject to the provisions of this subpart and using an afterburner to meet the emission limit in § 60.472(a)(1) and/or (b)(1) shall continuously monitor and record the temperature in the combustion zone of the afterburner. The monitoring instrument shall have an accuracy of ±10 °C over its range.

(c) An owner or operator subject to the provisions of this subpart and using a control device not mentioned in paragraphs (a) and (b) of this section shall provide to the Administrator information describing the operation of the control device and the process parameter(s) which would indicate proper operation and maintenance of the device. The Administrator may require continuous monitoring and will determine the process parameters to be monitored.

(d) The industry is exempted from the quarterly reports required under § 60.7(c). The owner/operator is required to record and report the operating temperature of the control device during the performance test and, as required by § 60.7(d), maintain a file of the temperature monitoring results for at least two years.

§ 60.474 Test methods and procedures.

(a) For saturators, the owner or operator shall conduct performance tests required in § 60.8 as follows:

(1) If the final product is shingle or mineral-surfaced roll roofing, the tests shall be conducted while 106.6-kg (235-lb) shingle is being produced.

(2) If the final product is saturated felt or smooth-surfaced roll roofing, the tests shall be conducted while 6.8-kg (15-lb) felt is being produced.

(3) If the final product is fiberglass shingle, the test shall be conducted while a nominal 100-kg (220-lb) shingle is being produced.

(b) In conducting the performance tests required in § 60.8, the owner or operator shall use as reference methods and procedures the test methods in appendix A of this part or other methods and procedures as specified in this section, except as provided in § 60.8(b).

(c) The owner or operator shall determine compliance with the particulate matter standards in § 60.472 as follows:

(1) The emission rate (E) of particulate matter shall be computed for each run using the following equation:

$$E=(c_s Q_{sd})/(PK)$$

where:

E=emission rate of particulate matter, kg/Mg.

c_s=concentration of particulate matter, g/dscm (g/dscf).

Q_{sd}=volumetric flow rate of effluent gas, dscm/hr (dscf/hr).

P=asphalt roofing production rate or asphalt charging rate, Mg/hr (ton/hr).
K=conversion factor, 1000 g/kg [907.2/(g-Mg)/(kg-ton)].

(2) Method 5A shall be used to determine the particulate matter concentration (c_s) and volumetric flow rate (Q_{sd}) of the effluent gas. For a saturator, the sampling time and sample volume for each run shall be at least 120 minutes and 3.00 dscm (106 dscf), and for the blowing still, at least 90 minutes or the duration of the coating blow or non-coating blow, whichever is greater, and 2.25 dscm (79.4 dscf).

(3) For the saturator, the asphalt roofing production rate (P) for each run shall be determined as follows: The amount of asphalt roofing produced on the shingle or saturated felt process lines shall be obtained by direct measurement. The asphalt roofing production rate is the amount produced divided by the time taken for the run.

(4) For the blowing still, the asphalt charging rate (P) shall be computed for each run using the following equation:

$$P=(Vd)/(K'\theta)$$

where:
P=asphalt charging rate to blowing still, Mg/hr (ton/hr).
V=volume of asphalt charged, m^3 (ft^3).
d=density of asphalt, kg/m^3 (llb/ft^3).
K′=conversion factor, 1000 kg/Mg (2000 lb/ton).
θ=duration of test run, hr.

(i) The volume (V) of asphalt charged shall be measured by any means accurate to within 10 percent.

(ii) The density (d) of the asphalt shall be computed using the following equation:

$$d=K''(1056.1-0.6176\ ^\circ C)$$

where:
°C=temperature at the start of the blow, °C.
K″=1.0 [0.06243 (lb − m^3)/(ft^3 − kg).

(5) Method 9 and the procedures in § 60.11 shall be used to determine opacity.

(d) The Administrator will determine compliance with the standards in § 60.472(a)(3) by using Method 22, modified so that readings are recorded every 15 seconds for a period of consecutive observations during representative conditions (in accordance with § 60.8(c)) totaling 60 minutes. A performance test shall consist of one run.

(e) The owner or operator shall use the monitoring device in § 60.473 (a) or (b) to monitor and record continuously the temperature during the particulate matter run and shall report the results to the Administrator with the performance test results.

(f) If at a later date the owner or operator believes the emission limits in § 60.472 (a) and (b) are being met even though the temperature measured in accordance with § 60.473 (a) and (b) is exceeding that measured during the performance test, he may submit a written request to the Administrator to repeat the performance test and procedure outlined in paragraph (c) of this section.

(g) If fuel oil is to be used to fire an afterburner used to control emissions from a blowing still, the owner or operator may petition the Administrator in accordance with § 60.11(e) of the General Provisions to establish an opacity standard for the blowing still that will be the opacity standard when fuel oil is used to fire the afterburner. To obtain this opacity standard, the owner or operator must request the Administrator to determine opacity during an initial, or subsequent, performance test when fuel oil is used to fire the afterburner. Upon receipt of the results of the performance test, the Administrator will make a finding concerning compliance with the mass standard for the blowing still. If the Administrator finds that the facility was in compliance with the mass standard during the performance test but failed to meet the zero opacity standard, the Administrator will establish and promulgate in the FEDERAL REGISTER an opacity standard for the blowing still that will be the opacity standard when fuel oil is used to fire the afterburner. When the afterburner is fired with natural gas, the zero percent opacity remains the applicable opacity standard.

[54 FR 6677, Feb. 14, 1989, as amended 54 FR 27016, June 27, 1989]

Subpart VV—Standards of Performance for Equipment Leaks of VOC in the Synthetic Organic Chemicals Manufacturing Industry

SOURCE: 48 FR 48335, Oct. 18, 1983, unless otherwise noted.

§ 60.480 Applicability and designation of affected facility.

(a)(1) The provisions of this subpart apply to affected facilities in the synthetic organic chemicals manufacturing industry.

(2) The group of all equipment (defined in § 60.481) within a process unit is an affected facility.

(b) Any affected facility under paragraph (a) of this section that commences construction or modification after January 5, 1981, shall be subject to the requirements of this subpart.

(c) Addition or replacement of equipment for the purpose of process improvement which is accomplished without a capital expenditure shall not by itself be considered a modification under this subpart.

(d)(1) If an owner or operator applies for one or more of the exemptions in this paragraph, then the owner or operator shall maintain records as required in § 60.486(i).

(2) Any affected facility that has the design capacity to produce less than 1,000 Mg/yr is exempt from § 60.482.

(3) If an affected facility produces heavy liquid chemicals only from heavy liquid feed or raw materials, then it is exempt from § 60.482.

(4) Any affected facility that produces beverage alcohol is exempt from § 60.482.

(5) Any affected facility that has no equipment in VOC service is exempt from § 60.482.

[48 FR 48335, Oct. 18, 1983, as amended at 49 FR 22607, May 30, 1984]

§ 60.481 Definitions.

As used in this subpart, all terms not defined herein shall have the meaning given them in the Act or in subpart A of part 60, and the following terms shall have the specific meanings given them.

Capital expenditure means, in addition to the definition in 40 CFR 60.2, an expenditure for a physical or operational change to an existing facility that:

(a) Exceeds P, the product of the facility's replacement cost, R, and an adjusted annual asset guideline repair allowance, A, as reflected by the following equation: $P = R \times A$, where

(1) The adjusted annual asset guideline repair allowance, A, is the product of the percent of the replacement cost, Y, and the applicable basic annual asset guideline repair allowance, B, as reflected by the following equation:

$$A = Y \times (B \div 100);$$

(2) The percent Y is determined from the following equation: $Y = 1.0 - 0.575 \log X$, where X is 1982 minus the year of construction; and

(3) The applicable basic annual asset guideline repair allowance, B, is selected from the following table consistent with the applicable subpart:

TABLE FOR DETERMINING APPLICABLE FOR B

Subpart applicable to facility	Value of B to be used in equation
VV	12.5
DDD	12.5
GGG	7.0
KKK	4.5

Closed vent system means a system that is not open to the atmosphere and that is composed of piping, connections, and, if necessary, flow-inducing devices that transport gas or vapor from a piece or pieces of equipment to a control device. If gas or vapor from regulated equipment is routed to a process (e.g., to a petroleum refinery fuel gas system), the process shall not be considered a closed vent system and is not subject to the closed vent system standards.

Connector means flanged, screwed, welded, or other joined fittings used to connect two pipe lines or a pipe line and a piece of process equipment.

Control device means an enclosed combustion device, vapor recovery system, or flare.

Distance piece means an open or enclosed casing through which the piston rod travels, separating the compressor cylinder from the crankcase.

Double block and bleed system means two block valves connected in series with a bleed valve or line that can vent the line between the two block valves.

Equipment means each pump, compressor, pressure relief device, sampling connection system, open-ended valve or line, valve, and flange or other connector in VOC service and any devices or systems required by this subpart.

First attempt at repair means to take rapid action for the purpose of stopping or reducing leakage of organic material to atmosphere using best practices.

In gas/vapor service means that the piece of equipment contains process fluid that is in the gaseous state at operating conditions.

In heavy liquid service means that the piece of equipment is not in gas/vapor service or in light liquid service.

In light liquid service means that the piece of equipment contains a liquid that meets the conditions specified in § 60.485(e).

In-situ sampling systems means nonextractive samplers or in-line samplers.

In vacuum service means that equipment is operating at an internal pressure which is at least 5 kilopascals (kPa) below ambient pressure.

In VOC service means that the piece of equipment contains or contacts a process fluid that is at least 10 percent VOC by weight. (The provisions of § 60.485(d) specify how to determine that a piece of equipment is not in VOC service.)

Liquids dripping means any visible leakage from the seal including spraying, misting, clouding, and ice formation.

Open-ended valve or line means any valve, except safety relief valves, having one side of the valve seat in contact with process fluid and one side open to the atmosphere, either directly or through open piping.

Pressure release means the emission of materials resulting from system pressure being greater than set pressure of the pressure relief device.

Process improvement means routine changes made for safety and occupational health requirements, for energy savings, for better utility, for ease of maintenance and operation, for correction of design deficiencies, for bottleneck removal, for changing product requirements, or for environmental control.

Process unit means components assembled to produce, as intermediate or final products, one or more of the chemicals listed in § 60.489 of this part. A process unit can operate independently if supplied with sufficient feed or raw materials and sufficient storage facilities for the product.

Process unit shutdown means a work practice or operational procedure that stops production from a process unit or part of a process unit. An unscheduled work practice or operational procedure that stops production from a process unit or part of a process unit for less than 24 hours is not a process unit shutdown. The use of spare equipment and technically feasible bypassing of equipment without stopping production are not process unit shutdowns.

Quarter means a 3-month period; the first quarter concludes on the last day of the last full month during the 180 days following initial startup.

Repaired means that equipment is adjusted, or otherwise altered, in order to eliminate a leak as indicated by one of the following: an instrument reading or 10,000 ppm or greater, indication of liquids dripping, or indication by a sensor that a seal or barrier fluid system has failed.

Replacement cost means the capital needed to purchase all the depreciable components in a facility.

Sensor means a device that measures a physical quantity or the change in a physical quantity such as temperature, pressure, flow rate, pH, or liquid level.

Synthetic organic chemicals manufacturing industry means the industry that produces, as intermediates or final products, one or more of the chemicals listed in § 60.489.

Volatile organic compounds or VOC means, for the purposes of this subpart, any reactive organic compounds as defined in § 60.2 Definitions.

[48 FR 48335, Oct. 18, 1983, as amended at 49 FR 22607, May 30, 1984; 49 FR 26738, June 29, 1984; 60 FR 43258, Aug. 18, 1995]

§ 60.482–1 Standards: General.

(a) Each owner or operator subject to the provisions of this subpart shall

demonstrate compliance with the requirements of §§ 60.482–1 to 60.482–10 for all equipment within 180 days of initial startup.

(b) Compliance with §§ 60.482–1 to 60.482–10 will be determined by review of records and reports, review of performance test results, and inspection using the methods and procedures specified in § 60.485.

(c)(1) An owner or operator may request a determination of equivalence of a means of emission limitation to the requirements of §§ 60.482–2, 60.482–3, 60.482–5, 60.482–6, 60.482–7, 60.482–8, and 60.482–10 as provided in § 60.484.

(2) If the Administrator makes a determination that a means of emission limitation is at least equivalent to the requirements of §§ 60.482–2, 60.482–3, 60.482–5, 60.482–6, 60.482–7, 60.482–8, or 60.482–10, an owner or operator shall comply with the requirements of that determination.

(d) Equipment that is in vacuum service is excluded from the requirements of §§ 60.482–2 to 60.482–10 if it is identified as required in § 60.486(e)(5).

[48 FR 48335, Oct. 18, 1983, as amended at 49 FR 22608, May 30, 1984]

§ 60.482–2 Standards: Pumps in light liquid service.

(a)(1) Each pump in light liquid service shall be monitored monthly to detect leaks by the methods specified in §60.485(b), except as provided in § 60.482–1(c) and paragraphs (d), (e), and (f) of this section.

(2) Each pump in light liquid service shall be checked by visual inspection each calendar week for indications of liquids dripping from the pump seal.

(b)(1) If an instrument reading of 10,000 ppm or greater is measured, a leak is detected.

(2) If there are indications of liquids dripping from the pump seal, a leak is detected.

(c)(1) When a leak is detected, it shall be repaired as soon as practicable, but not later than 15 calendar days after it is detected, except as provided in § 60.482–9.

(2) A first attempt at repair shall be made no later than 5 calendar days after each leak is detected.

(d) Each pump equipped with a dual mechanical seal system that includes a barrier fluid system is exempt from the requirements of paragraph (a), *Provided* the following requirements are met:

(1) Each dual mechanical seal system is—

(i) Operated with the barrier fluid at a pressure that is at all times greater than the pump stuffing box pressure; or

(ii) Equipment with a barrier fluid degassing reservoir that is connected by a closed vent system to a control device that complies with the requirements of § 60.482–10; or

(iii) Equipped with a system that purges the barrier fluid into a process stream with zero VOC emissions to the atmosphere.

(2) The barrier fluid system is in heavy liquid service or is not in VOC service.

(3) Each barrier fluid system is equipped with a sensor that will detect failure of the seal system, the barrier fluid system, or both.

(4) Each pump is checked by visual inspection, each calendar week, for indications of liquids dripping from the pump seals.

(5)(i) Each sensor as described in paragraph (d)(3) is checked daily or is equipped with an audible alarm, and

(ii) The owner or operator determines, based on design considerations and operating experience, a criterion that indicates failure of the seal system, the barrier fluid system, or both.

(6)(i) If there are indications of liquids dripping from the pump seal or the sensor indicates failure of the seal system, the barrier fluid system, or both based on the criterion determined in paragraph (d)(5)(ii), a leak is detected.

(ii) When a leak is detected, it shall be repaired as soon as practicable, but not later than 15 calendar days after it is detected, except as provided in § 60.482–9.

(iii) A first attempt at repair shall be made no later than 5 calendar days after each leak is detected.

(e) Any pump that is designated, as described in § 60.486(e)(1) and (2), for no detectable emission, as indicated by an instrument reading of less than 500 ppm above background, is exempt from the requirements of paragraphs (a), (c), and (d) if the pump:

(1) Has no externally actuated shaft penetrating the pump housing,

(2) Is demonstrated to be operating with no detectable emissions as indicated by an instrument reading of less than 500 ppm above background as measured by the methods specified in § 60.485(c), and

(3) Is tested for compliance with paragraph (e)(2) initially upon designation, annually, and at other times requested by the Administrator.

(f) If any pump is equipped with a closed vent system capable of capturing and transporting any leakage from the seal or seals to a control device that complies with the requirements of § 60.482–10, it is exempt from the paragraphs (a) through (e).

§ 60.482–3 Standards: Compressors.

(a) Each compressor shall be equipped with a seal system that includes a barrier fluid system and that prevents leakage of VOC to the atmosphere, except as provided in § 60.482–1(c) and paragraph (h) and (i) of this section.

(b) Each compressor seal system as required in paragraph (a) shall be:

(1) Operated with the barrier fluid at a pressure that is greater than the compressor stuffing box pressure; or

(2) Equipped with a barrier fluid system that is connected by a closed vent system to a control device that complies with the requirements of § 60.482–10; or

(3) Equipped with a system that purges the barrier fluid into a process stream with zero VOC emissions to the atmosphere.

(c) The barrier fluid system shall be in heavy liquid service or shall not be in VOC service.

(d) Each barrier fluid system as described in paragraph (a) shall be equipped with a sensor that will detect failure of the seal system, barrier fluid system, or both.

(e)(1) Each sensor as required in paragraph (d) shall be checked daily or shall be equipped with an audible alarm.

(2) The owner or operator shall determine, based on design considerations and operating experience, a criterion that indicates failure of the seal system, the barrier fluid system, or both.

(f) If the sensor indicates failure of the seal system, the barrier system, or both based on the criterion determined under paragraph (e)(2), a leak is detected.

(g)(1) When a leak is detected, it shall be repaired as soon as practicable, but not later than 15 calendar days after it is detected, except as provided in § 60.482–9.

(2) A first attempt at repair shall be made no later than 5 calendar days after each leak is detected.

(h) A compressor is exempt from the requirements of paragraphs (a) and (b), if it is equipped with a closed vent system capable of capturing and transporting any leakage from the seal to a control device that complies with the requirements of § 60.482–10, except as provided in paragraph (i) of this section.

(i) Any compressor that is designated, as described in § 60.486(e) (1) and (2), for no detectable emissions, as indicated by an instrument reading of less than 500 ppm above background, is exempt from the requirements of paragraphs (a)–(h) if the compressor:

(1) Is demonstrated to be operating with no detectable emissions, as indicated by an instrument reading of less than 500 ppm above background, as measured by the methods specified in § 60.485(c); and

(2) Is tested for compliance with paragraph (i)(1) initially upon designation, annually, and at other times requested by the Administrator.

(j) Any existing reciprocating compressor in a process unit which becomes an affected facility under provisions of § 60.14 or § 60.15 is exempt from § 60.482(a), (b), (c), (d), (e), and (h), provided the owner or operator demonstrates that recasting the distance piece or replacing the compressor are the only options available to bring the compressor into compliance with the provisions of paragraphs (a) through (e) and (h) of this section.

§ 60.482–4 Standards: Pressure relief devices in gas/vapor service.

(a) Except during pressure releases, each pressure relief device in gas/vapor service shall be operated with no detectable emissions, as indicated by an instrument reading of less than 500 ppm above background, as determined by the methods specified in § 60.485(c).

(b)(1) After each pressure release, the pressure relief device shall be returned to a condition of no detectable emissions, as indicated by an instrument reading of less than 500 ppm above background, as soon as practicable, but no later than 5 calendar days after the pressure release, except as provided in § 60.482–9.

(2) No later than 5 calendar days after the pressure release, the pressure relief device shall be monitored to confirm the conditions of no detectable emissions, as indicated by an instrument reading of less than 500 ppm above background, by the methods specified in § 60.485(c).

(c) Any pressure relief device that is equipped with a closed vent system capable of capturing and transporting leakage through the pressure relief device to a control device as described in § 60.482–10 is exempted from the requirements of paragraphs (a) and (b).

§ 60.482–5 Standards: Sampling connection systems.

(a) Each sampling connection system shall be equipped with a closed-purged, closed-loop, or closed-vent system, except as provided in § 60.482–1(c).

(b) Each closed-purge, closed-loop, or closed-vent system as required in paragraph (a) of this section shall comply with the requirements specified in paragraphs (b)(1) through (b)(3) of this section:

(1) Return the purged process fluid directly to the process line; or

(2) Collect and recycle the purged process fluid to a process; or

(3) Be designed and operated to capture and transport all the purged process fluid to a control device that complies with the requirements of § 60.482–10.

(c) In situ sampling systems and sampling systems without purges are exempt from the requirements of paragraphs (a) and (b) of this section.

[60 FR 43258, Aug. 18, 1995]

§ 60.482–6 Standards: Open-ended valves or lines.

(a)(1) Each open-ended valve or line shall be equipped with a cap, blind flange, plug, or a second valve, except as provided in § 60.482–1(c).

(2) The cap, blind flange, plug, or second valve shall seal the open end at all times except during operations requiring process fluid flow through the open-ended valve or line.

(b) Each open-ended valve or line equipped with a second valve shall be operated in a manner such that the valve on the process fluid end is closed before the second valve is closed.

(c) When a double block-and-bleed system is being used, the bleed valve or line may remain open during operations that require venting the line between the block valves but shall comply with paragraph (a) at all other times.

[48 FR 48335, Oct. 18, 1983, as amended at 49 FR 22607, May 30, 1984]

§ 60.482–7 Standards: Valves in gas/vapor service and in light liquid service.

(a) Each valve shall be monitored monthly to detect leaks by the methods specified in § 60.485(b) and shall comply with paragraphs (b) through (e), except as provided in paragraphs (f), (g), and (h), § 60.483–1, 2, and § 60.482–1(c).

(b) If an instrument reading of 10,000 ppm or greater is measured, a leak is detected.

(c)(1) Any valve for which a leak is not detected for 2 successive months may be monitored the first month of every quarter, beginning with the next quarter, until a leak is detected.

(2) If a leak is detected, the valve shall be monitored monthly until a leak is not detected for 2 successive months.

(d)(1) When a leak is detected, it shall be repaired as soon as practicable, but no later than 15 calendar days after the leak is detected, except as provided in § 60.482–9.

(2) A first attempt at repair shall be made no later than 5 calendar days after each leak is detected.

(e) First attempts at repair include, but are not limited to, the following best practices where practicable:

(1) Tightening of bonnet bolts;

(2) Replacement of bonnet bolts;

(3) Tightening of packing gland nuts;

(4) Injection of lubricant into lubricated packing.

(f) Any valve that is designated, as described in § 60.486(e)(2), for no detectable emissions, as indicated by an instrument reading of less than 500 ppm above background, is exempt from the requirements of paragraph (a) if the valve:

(1) Has no external actuating mechanism in contact with the process fluid,

(2) Is operated with emissions less than 500 ppm above background as determined by the method specified in § 60.485(c), and

(3) Is tested for compliance with paragraph (f)(2) initially upon designation, annually, and at other times requested by the Administrator.

(g) Any valve that is designated, as described in § 60.486(f)(1), as an unsafe-to-monitor valve is exempt from the requirements of paragraph (a) if:

(1) The owner or operator of the valve demonstrates that the valve is unsafe to monitor because monitoring personnel would be exposed to an immediate danger as a consequence of complying with paragraph (a), and

(2) The owner or operator of the valve adheres to a written plan that requires monitoring of the valve as frequently as practicable during safe-to-monitor times.

(h) Any valve that is designated, as described in § 60.486(f)(2), as a difficult-to-monitor valve is exempt from the requirements of paragraph (a) if:

(1) The owner or operator of the valve demonstrates that the valve cannot be monitored without elevating the monitoring personnel more than 2 meters above a support surface.

(2) The process unit within which the valve is located either becomes an affected facility through § 60.14 or § 60.15 or the owner or operator designates less than 3.0 percent of the total number of valves as difficult-to-monitor, and

(3) The owner or operator of the valve follows a written plan that requires monitoring of the valve at least once per calendar year.

[48 FR 48335, Oct. 18, 1983, as amended at 49 FR 22608, May 30, 1984]

§ 60.482–8 Standards: Pumps and valves in heavy liquid service, pressure relief devices in light liquid or heavy liquid service, and flanges and other connectors.

(a) Pumps and valves in heavy liquid service, pressure relief devices in light liquid or heavy liquid service, and flanges and other connectors shall be monitored within 5 days by the method specified in § 60.485(b) if evidence of a potential leak is found by visual, audible, olfactory, or any other detection method.

(b) If an instrument reading of 10,000 ppm or greater is measured, a leak is detected.

(c)(1) When a leak is detected, it shall be repaired as soon as practicable, but not later than 15 calendar days after it is detected, except as provided in § 60.482–9.

(2) The first attempt at repair shall be made no later than 5 calendar days after each leak is detected.

(d) First attempts at repair include, but are not limited to, the best practices described under § 60.482–7(e).

§ 60.482–9 Standards: Delay of repair.

(a) Delay of repair of equipment for which leaks have been detected will be allowed if the repair is technically infeasible without a process unit shutdown. Repair of this equipment shall occur before the end of the next process unit shutdown.

(b) Delay of repair of equipment will be allowed for equipment which is isolated from the process and which does not remain in VOC service.

(c) Delay of repair for valves will be allowed if:

(1) The owner or operator demonstrates that emissions of purged material resulting from immediate repair are greater than the fugitive emissions likely to result from delay of repair, and

(2) When repair procedures are effected, the purged material is collected and destroyed or recovered in a control device complying with § 60.482–10.

(d) Delay of repair for pumps will be allowed if:

(1) Repair requires the use of a dual mechanical seal system that includes a barrier fluid system, and

(2) Repair is completed as soon as practicable, but not later than 6 months after the leak was detected.

(e) Delay of repair beyond a process unit shutdown will be allowed for a valve, if valve assembly replacement is necessary during the process unit shutdown, valve assembly supplies have been depleted, and valve assembly supplies had been sufficiently stocked before the supplies were depleted. Delay of repair beyond the next process unit shutdown will not be allowed unless the next process unit shutdown occurs sooner than 6 months after the first process unit shutdown.

§ 60.482–10 Standards: Closed vent systems and control devices.

(a) Owners or operators of closed vent systems and control devices used to comply with provisions of this subpart shall comply with the provisions of this section.

(b) Vapor recovery systems (for example, condensers and adsorbers) shall be designed and operated to recover the VOC emissions vented to them with an efficiency of 95 percent or greater.

(c) Enclosed combustion devices shall be designed and operated to reduce the VOC emissions vented to them with an efficiency of 95 percent or greater, or to provide a minimum residence time of 0.75 seconds at a minimum temperature of 816 °C.

(d) Flares used to comply with this subpart shall comply with the requirements of §60.18.

(e) Owners or operators of control devices used to comply with the provisions of this subpart shall monitor these control devices to ensure that they are operated and maintained in conformance with their designs.

(f) Except as provided in paragraphs (i) through (k) of this section, each closed vent system shall be inspected according to the procedures and schedule specified in paragraphs (f)(1) and (f)(2) of this section.

(1) If the vapor collection system or closed vent system is constructed of hard-piping, the owner or operator shall comply with the requirements specified in paragraphs (f)(1)(i) and (f)(1)(ii) of this section:

(i) Conduct an initial inspection according to the procedures in §60.485(b); and

(ii) Conduct annual visual inspections for visible, audible, or olfactory indications of leaks.

(2) If the vapor collection system or closed vent system is constructed of ductwork, the owner or operator shall:

(i) Conduct an initial inspection according to the procedures in §60.485(b); and

(ii) Conduct annual inspections according to the procedures in §60.485(b).

(g) Leaks, as indicated by an instrument reading greater than 500 parts per million by volume above background or by visual inspections, shall be repaired as soon as practicable except as provided in paragraph (h) of this section.

(1) A first attempt at repair shall be made no later than 5 calendar days after the leak is detected.

(2) Repair shall be completed no later than 15 calendar days after the leak is detected.

(h) Delay of repair of a closed vent system for which leaks have been detected is allowed if the repair is technically infeasible without a process unit shutdown or if the owner or operator determines that emissions resulting from immediate repair would be greater than the fugitive emissions likely to result from delay of repair. Repair of such equipment shall be complete by the end of the next process unit shutdown.

(i) If a vapor collection system or closed vent system is operated under a vacuum, it is exempt from the inspection requirements of paragraphs (f)(1)(i) and (f)(2) of this section.

(j) Any parts of the closed vent system that are designated, as described in paragraph (l)(1) of this section, as unsafe to inspect are exempt from the inspection requirements of paragraphs (f)(1)(i) and (f)(2) of this section if they comply with the requirements specified in paragraphs (j)(1) and (j)(2) of this section:

(1) The owner or operator determines that the equipment is unsafe to inspect because inspecting personnel would be exposed to an imminent or potential

danger as a consequence of complying with paragraphs (f)(1)(i) or (f)(2) of this section; and

(2) The owner or operator has a written plan that requires inspection of the equipment as frequently as practicable during safe-to-inspect times.

(k) Any parts of the closed vent system that are designated, as described in paragraph (l)(2) of this section, as difficult to inspect are exempt from the inspection requirements of paragraphs (f)(1)(i) and (f)(2) of this section if they comply with the requirements specified in paragraphs (k)(1) through (k)(3) of this section:

(1) The owner or operator determines that the equipment cannot be inspected without elevating the inspecting personnel more than 2 meters above a support surface; and

(2) The process unit within which the closed vent system is located becomes an affected facility through §§ 60.14 or 60.15, or the owner or operator designates less than 3.0 percent of the total number of closed vent system equipment as difficult to inspect; and

(3) The owner or operator has a written plan that requires inspection of the equipment at least once every 5 years. A closed vent system is exempt from inspection if it is operated under a vacuum.

(l) The owner or operator shall record the information specified in paragraphs (l)(1) through (l)(5) of this section.

(1) Identification of all parts of the closed vent system that are designated as unsafe to inspect, an explanation of why the equipment is unsafe to inspect, and the plan for inspecting the equipment.

(2) Identification of all parts of the closed vent system that are designated as difficult to inspect, an explanation of why the equipment is difficult to inspect, and the plan for inspecting the equipment.

(3) For each inspection during which a leak is detected, a record of the information specified in § 60.486(c).

(4) For each inspection conducted in accordance with § 60.485(b) during which no leaks are detected, a record that the inspection was performed, the date of the inspection, and a statement that no leaks were detected.

(5) For each visual inspection conducted in accordance with paragraph (f)(1)(ii) of this section during which no leaks are detected, a record that the inspection was performed, the date of the inspection, and a statement that no leaks were detected.

(m) Closed vent systems and control devices used to comply with provisions of this subpart shall be operated at all times when emissions may be vented to them.

[48 FR 48335, Oct. 18, 1983, as amended at 51 FR 2702, Jan. 21, 1986; 60 FR 43258, Aug. 18, 1995; 61 FR 29878, June 12, 1996]

§ 60.483–1 Alternative standards for valves—allowable percentage of valves leaking.

(a) An owner or operator may elect to comply with an allowable percentage of valves leaking of equal to or less than 2.0 percent.

(b) The following requirements shall be met if an owner or operator wishes to comply with an allowable percentage of valves leaking:

(1) An owner or operator must notify the Administrator that the owner or operator has elected to comply with the allowable percentage of valves leaking before implementing this alternative standard, as specified in § 60.487(b).

(2) A performance test as specified in paragraph (c) of this section shall be conducted initially upon designation, annually, and at other times requested by the Administrator.

(3) If a valve leak is detected, it shall be repaired in accordance with § 60.482–7(d) and (e).

(c) Performance tests shall be conducted in the following manner:

(1) All valves in gas/vapor and light liquid service within the affected facility shall be monitored within 1 week by the methods specified in § 60.485(b).

(2) If an instrument reading of 10,000 ppm or greater is measured, a leak is detected.

(3) The leak percentage shall be determined by dividing the number of valves for which leaks are detected by the number of valves in gas/vapor and light liquid service within the affected facility.

(d) Owners and operators who elect to comply with this alternative standard

shall not have an affected facility with a leak percentage greater than 2.0 percent.

§ 60.483–2 Alternative standards for valves—skip period leak detection and repair.

(a)(1) An owner or operator may elect to comply with one of the alternative work practices specified in paragraphs (b)(2) and (3) of this section.

(2) An owner or operator must notify the Administrator before implementing one of the alternative work practices, as specified in § 60.487(b).

(b)(1) An owner or operator shall comply initially with the requirements for valves in gas/vapor service and valves in light liquid service, as described in § 60.482–7.

(2) After 2 consecutive quarterly leak detection periods with the percent of valves leaking equal to or less than 2.0, an owner or operator may begin to skip 1 of the quarterly leak detection periods for the valves in gas/vapor and light liquid service.

(3) After 5 consecutive quarterly leak detection periods with the percent of valves leaking equal to or less than 2.0, an owner or operator may begin to skip 3 of the quarterly leak detection periods for the valves in gas/vapor and light liquid service.

(4) If the percent of valves leaking is greater than 2.0, the owner or operator shall comply with the requirements as described in § 60.482–7 but can again elect to use this section.

(5) The percent of valves leaking shall be determined by dividing the sum of valves found leaking during current monitoring and valves for which repair has been delayed by the total number of valves subject to the requirements of this section.

(6) An owner or operator must keep a record of the percent of valves found leaking during each leak detection period.

§ 60.484 Equivalence of means of emission limitation.

(a) Each owner or operator subject to the provisions of this subpart may apply to the Administrator for determination of equivalance for any means of emission limitation that achieves a reduction in emissions of VOC at least equivalent to the reduction in emissions of VOC achieved by the controls required in this subpart.

(b) Determination of equivalence to the equipment, design, and operational requirements of this subpart will be evaluated by the following guidelines:

(1) Each owner or operator applying for an equivalence determination shall be responsible for collecting and verifying test data to demonstrate equivalence of means of emission limitation.

(2) The Administrator will compare test data for the means of emission limitation to test data for the equipment, design, and operational requirements.

(3) The Administrator may condition the approval of equivalence on requirements that may be necessary to assure operation and maintenance to achieve the same emission reduction as the equipment, design, and operational requirements.

(c) Determination of equivalence to the required work practices in this subpart will be evaluated by the following guidelines:

(1) Each owner or operator applying for a determination of equivalence shall be responsible for collecting and verifying test data to demonstrate equivalence of an equivalent means of emission limitation.

(2) For each affected facility for which a determination of equivalence is requested, the emission reduction achieved by the required work practice shall be demonstrated.

(3) For each affected facility, for which a determination of equivalence is requested, the emission reduction achieved by the equivalent means of emission limitation shall be demonstrated.

(4) Each owner or operator applying for a determination of equivalence shall commit in writing to work practice(s) that provide for emission reductions equal to or greater than the emission reductions achieved by the required work practice.

(5) The Administrator will compare the demonstrated emission reduction for the equivalent means of emission limitation to the demonstrated emission reduction for the required work

practices and will consider the commitment in paragraph (c)(4).

(6) The Administrator may condition the approval of equivalence on requirements that may be necessary to assure operation and maintenance to achieve the same emission reduction as the required work practice.

(d) An owner or operator may offer a unique approach to demonstrate the equivalence of any equivalent means of emission limitation.

(e)(1) After a request for determination of equivalence is received, the Administrator will publish a notice in the FEDERAL REGISTER and provide the opportunity for public hearing if the Administrator judges that the request may be approved.

(2) After notice and opportunity for public hearing, the Administrator will determine the equivalence of a means of emission limitation and will publish the determination in the FEDERAL REGISTER.

(3) Any equivalent means of emission limitations approved under this section shall constitute a required work practice, equipment, design, or operational standard within the meaning of section 111(h)(1) of the Clean Air Act.

(f)(1) Manufacturers of equipment used to control equipment leaks of VOC may apply to the Administrator for determination of equivalence for any equivalent means of emission limitation that achieves a reduction in emissions of VOC achieved by the equipment, design, and operational requirements of this subpart.

(2) The Administrator will make an equivalence determination according to the provisions of paragraphs (b), (c), (d), and (e).

§ 60.485 Test methods and procedures.

(a) In conducting the performance tests required in § 60.8, the owner or operator shall use as reference methods and procedures the test methods in appendix A of this part or other methods and procedures as specified in this section, except as provided in § 60.8(b).

(b) The owner or operator shall determine compliance with the standards in §§ 60.482, 60.483, and 60.484 as follows:

(1) Method 21 shall be used to determine the presence of leaking sources. The instrument shall be calibrated before use each day of its use by the procedures specified in Method 21. The following calibration gases shall be used:

(i) Zero air (less than 10 ppm of hydrocarbon in air); and

(ii) A mixture of methane or n-hexane and air at a concentration of about, but less than, 10,000 ppm methane or n-hexane.

(c) The owner or operator shall determine compliance with the no detectable emission standards in §§ 60.482–2(e), 60.482–3(i), 60.482–4, 60.482–7(f), and 60.482–10(e) as follows:

(1) The requirements of paragraph (b) shall apply.

(2) Method 21 shall be used to determine the background level. All potential leak interfaces shall be traversed as close to the interface as possible. The arithmetic difference between the maximum concentration indicates by the instrument and the background level is compared with 500 ppm for determining compliance.

(d) The owner or operator shall test each piece of equipment unless he demonstrates that a process unit is not in VOC series, i.e., that the VOC content would never be reasonably expected to exceed 10 percent by weight. For purposes of this demonstration, the following methods and procedures shall be used:

(1) Procedures that conform to the general methods in ASTM E–260, E–168, E–169 (incorporated by reference—see § 60.17) shall be used to determine the percent VOC content in the process fluid that is contained in or contacts a piece of equipment.

(2) Organic compounds that are considered by the Administrator to have negligible photochemical reactivity may be excluded from the total quantity of organic compounds in determining the VOC content of the process fluid.

(3) Engineering judgment may be used to estimate the VOC content, if a piece of equipment had not been shown previously to be in service. If the Administrator disagrees with the judgment, paragraphs (d) (1) and (2) of this section shall be used to resolve the disagreement.

(e) The owner or operator shall demonstrate that an equipment is in light

liquid service by showing that all the following conditions apply:

(1) The vapor pressure of one or more of the components is greater than 0.3 kPa at 20 °C. Standard reference texts or ASTM D–2879 (incorporated by reference—see § 60.17) shall be used to determine the vapor pressures.

(2) The total concentration of the pure components having a vapor pressure greater than 0.3 kPa at 20 °C is equal to or greater than 20 percent by weight.

(3) The fluid is a liquid at operating conditions.

(f) Samples used in conjunction with paragraphs (d), (e), and (g) shall be representative of the process fluid that is contained in or contacts the equipment or the gas being combusted in the flare.

(g) The owner or operator shall determine compliance with the standards of flares as follows:

(1) Method 22 shall be used to determine visible emissions.

(2) A thermocouple or any other equivalent device shall be used to monitor the presence of a pilot flame in the flare.

(3) The maximum permitted velocity (V_{max}) for air-assisted flares shall be computed using the following equation:

$V_{max}=8.706+0.7084\ H_T$

where:

V_{max}=maximum permitted velocity, m/sec.
H_T=net heating value of the gas being combusted, MJ/scm.

(4) The net heating value (H_T) of the gas being combusted in a flare shall be computed as follows:

$$H_T = K \sum_{i=1}^{n} C_i H_i$$

where:

K=conversion constant, 1.740×10^{7} [(g-mole)(MJ)]/[(ppm)(scm)(kcal).
C_i=concentration of sample component ''i'', ppm.
H_i=net heat of combustion of sample component ''i'' at 25 °C and 760 mm Hg, kcal/g-mole.

(5) Method 18 and ASTM D 2504–67 (incorporated by reference—see § 60.17) shall be used to determine the concentration of sample component ''i.''

(6) ASTM D 2382–76 (incorporated by reference—see § 60.17) shall be used to determine the net heat of combustion of component ''i'' if published values are not available or cannot be calculated.

(7) Method 2, 2A, 2C, or 2D, as appropriate, shall be used to determine the actual exit velocity of a flare. If needed, the unobstructed (free) cross-sectional area of the flare tip shall be used.

[54 FR 6678, Feb. 14, 1989, as amended at 54 FR 27016, June 27, 1989]

§ 60.486 Recordkeeping requirements.

(a)(1) Each owner or operator subject to the provisions of this subpart shall comply with the recordkeeping requirements of this section.

(2) An owner or operator of more than one affected facility subject to the provisions of this subpart may comply with the recordkeeping requirements for these facilities in one recordkeeping system if the system identifies each record by each facility.

(b) When each leak is detected as specified in §§ 60.482–2, 60.482–3, 60.482–7, 60.482–8, and 60.483–2, the following requirements apply:

(1) A weatherproof and readily visible identification, marked with the equipment identification number, shall be attached to the leaking equipment.

(2) The identification on a valve may be removed after it has been monitored for 2 successive months as specified in § 60.482–7(c) and no leak has been detected during those 2 months.

(3) The identification on equipment except on a valve, may be removed after it has been repaired.

(c) When each leak is detected as specified in §§ 60.482–2, 60.482–3, 60.482–7, 60.482–8, and 60.483–2, the following information shall be recorded in a log and shall be kept for 2 years in a readily accessible location:

(1) The instrument and operator identification numbers and the equipment identification number.

(2) The date the leak was detected and the dates of each attempt to repair the leak.

(3) Repair methods applied in each attempt to repair the leak.

(4) ''Above 10,000'' if the maximum instrument reading measured by the

methods specified in §60.485(a) after each repair attempt is equal to or greater than 10,000 ppm.

(5) ''Repair delayed'' and the reason for the delay if a leak is not repaired within 15 calendar days after discovery of the leak.

(6) The signature of the owner or operator (or designate) whose decision it was that repair could not be effected without a process shutdown.

(7) The expected date of successful repair of the leak if a leak is not repaired within 15 days.

(8) Dates of process unit shutdown that occur while the equipment is unrepaired.

(9) The date of successful repair of the leak.

(d) The following information pertaining to the design requirements for closed vent systems and control devices described in §60.482–10 shall be recorded and kept in a readily accessible location:

(1) Detailed schematics, design specifications, and piping and instrumentation diagrams.

(2) The dates and descriptions of any changes in the design specifications.

(3) A description of the parameter or parameters monitored, as required in §60.482–10(e), to ensure that control devices are operated and maintained in conformance with their design and an explanation of why that parameter (or parameters) was selected for the monitoring.

(4) Periods when the closed vent systems and control devices required in §§60.482–2, 60.482–3, 60.482–4, and 60.482–5 are not operated as designed, including periods when a flare pilot light does not have a flame.

(5) Dates of startups and shutdowns of the closed vent systems and control devices required in §§60.482–2, 60.482–3, 60.482–4, and 60.482–5.

(e) The following information pertaining to all equipment subject to the requirements in §§60.482–1 to 60.482–10 shall be recorded in a log that is kept in a readily accessible location:

(1) A list of identification numbers for equipment subject to the requirements of this subpart.

(2)(i) A list of identification numbers for equipment that are designated for no detectable emissions under the provisions of §§60.482–2(e), 60.482–3(i) and 60.482–7(f).

(ii) The designation of equipment as subject to the requirements of §60.482–2(e), §60.482–3(i), or §60.482–7(f) shall be signed by the owner or operator.

(3) A list of equipment identification numbers for pressure relief devices required to comply with §60.482–4.

(4)(i) The dates of each compliance test as required in §§60.482–2(e), 60.482–3(i), 60.482–4, and 60.482–7(f).

(ii) The background level measured during each compliance test.

(iii) The maximum instrument reading measured at the equipment during each compliance test.

(5) A list of identification numbers for equipment in vacuum service.

(f) The following information pertaining to all valves subject to the requirements of §60.482–7(g) and (h) shall be recorded in a log that is kept in a readily accessible location:

(1) A list of identification numbers for valves that are designated as unsafe-to-monitor, an explanation for each valve stating why the valve is unsafe-to-monitor, and the plan for monitoring each valve.

(2) A list of identification numbers for valves that are designated as difficult-to-monitor, an explanation for each valve stating why the valve is difficult-to-monitor, and the schedule for monitoring each valve.

(g) The following information shall be recorded for valves complying with §60.483–2:

(1) A schedule of monitoring.

(2) The percent of valves found leaking during each monitoring period.

(h) The following information shall be recorded in a log that is kept in a readily accessible location:

(1) Design criterion required in §§60.482–2(d)(5) and 60.482–3(e)(2) and explanation of the design criterion; and

(2) Any changes to this criterion and the reasons for the changes.

(i) The following information shall be recorded in a log that is kept in a readily accessible location for use in determining exemptions as provided in §60.480(d):

(1) An analysis demonstrating the design capacity of the affected facility,

(2) A statement listing the feed or raw materials and products from the

affected facilities and an analysis demonstrating whether these chemicals are heavy liquids or beverage alcohol, and

(3) An analysis demonstrating that equipment is not in VOC service.

(j) Information and data used to demonstrate that a piece of equipment is not in VOC service shall be recorded in a log that is kept in a readily accessible location.

(k) The provisions of §60.7 (b) and (d) do not apply to affected facilities subject to this subpart.

§ 60.487 Reporting requirements.

(a) Each owner or operator subject to the provisions of this subpart shall submit semiannual reports to the Administrator beginning six months after the initial startup date.

(b) The initial semiannual report to the Administrator shall include the following information:

(1) Process unit identification.

(2) Number of valves subject to the requirements of §60.482–7, excluding those valves designated for no detectable emissions under the provisions of §60.482–7(f).

(3) Number of pumps subject to the requirements of §60.482–2, excluding those pumps designated for no detectable emissions under the provisions of §60.482–2(e) and those pumps complying with §60.482–2(f).

(4) Number of compressors subject to the requirements of §60.482–3, excluding those compressors designated for no detectable emissions under the provisions of §60.482–3(i) and those compressors complying with §60.482–3(h).

(c) All semiannual reports to the Administrator shall include the following information, summarized from the information in §60.486:

(1) Process unit identification.

(2) For each month during the semiannual reporting period,

(i) Number of valves for which leaks were detected as described in §60.482(7)(b) or §60.483–2,

(ii) Number of valves for which leaks were not repaired as required in §60.482–7(d)(1),

(iii) Number of pumps for which leaks were detected as described in §60.482–2(b) and (d)(6)(i),

(iv) Number of pumps for which leaks were not repaired as required in §60.482–2(c)(1) and (d)(6)(ii),

(v) Number of compressors for which leaks were detected as described in §60.482–3(f),

(vi) Number of compressors for which leaks were not repaired as required in §60.482–3(g)(1), and

(vii) The facts that explain each delay of repair and, where appropriate, why a process unit shutdown was technically infeasible.

(3) Dates of process unit shutdowns which occurred within the semiannual reporting period.

(4) Revisions to items reported according to paragraph (b) if changes have occurred since the initial report or subsequent revisions to the initial report.

(d) An owner or opertor electing to comply with the provisions of §§60.483–1 and 60.483–2 shall notify the Administrator of the alternative standard selected 90 days before implementing either of the provisions.

(e) An owner or operator shall report the results of all performance tests in accordance with §60.8 of the General Provisions. The provisions of §60.8(d) do not apply to affected facilities subject to the provisions of this subpart except that an owner or operator must notify the Administrator of the schedule for the initial performance tests at least 30 days before the initial performance tests.

(f) The requirements of paragraphs (a) through (c) of this section remain in force until and unless EPA, in delegating enforcement authority to a State under section 111(c) of the Act, approves reporting requirements or an alternative means of compliance surveillance adopted by such State. In that event, affected sources within the State will be relieved of the obligation to comply with the requirements of paragraphs (a) through (c) of this section, provided that they comply with the requirements established by the State.

[48 FR 48335, Oct. 18, 1983, as amended at 49 FR 22608, May 30, 1984]

§ 60.488 Reconstruction.

For the purposes of this subpart:

(a) The cost of the following frequently replaced components of the facility shall not be considered in calculating either the ''fixed capital cost of the new components'' or the ''fixed capital costs that would be required to construct a comparable new facility'' under §60.15: pump seals, nuts and bolts, rupture disks, and packings.

(b) Under §60.15, the ''fixed capital cost of new components'' includes the fixed capital cost of all depreciable components (except components specified in §60.488 (a)) which are or will be replaced pursuant to all continuous programs of component replacement which are commenced within any 2-year period following the applicability date for the appropriate subpart. (See the ''Applicability and designation of affected facility'' section of the appropriate subpart.) For purposes of this paragraph, ''commenced'' means that an owner or operator has undertaken a continuous program of component replacement or that an owner or operator has entered into a contractual obligation to undertake and complete, within a reasonable time, a continuous program of component replacement.

[49 FR 22608, May 30, 1984]

§60.489 List of chemicals produced by affected facilities.

The following chemicals are produced, as intermediates or final products, by process units covered under this subpart. The applicability date for process units producing one or more of these chemicals is January 5, 1981.

CAS No. [a]	Chemical
105–57–7	Acetal.
75–07–0	Acetaldehyde.
107–89–1	Acetaldol.
60–35–5	Acetamide.
103–84–4	Acetanilide.
64–19–7	Acetic acid.
108–24–7	Acetic anhydride.
67–64–1	Acetone.
75–86–5	Acetone cyanohydrin.
75–05–8	Acetonitrile.
98–86–2	Acetophenone.
75–36–5	Acetyl chloride.
74–86–2	Acetylene.
107–02–8	Acrolein.
79–06–1	Acrylamide.
79–10–7	Acrylic acid.
107–13–1	Acrylonitrile.
124–04–9	Adipic acid.
111–69–3	Adiponitrile.
[b]	Alkyl naphthalenes.
107–18–6	Allyl alcohol.
107–05–1	Allyl chloride.
1321–11–5	Aminobenzoic acid.
111–41–1	Aminoethylethanolamine.
123–30–8	p-Aminophenol.
628–63–7, 123–92–2.	Amyl acetates.
71–41–0 [c]	Amyl alcohols.
110–58–7	Amyl amine.
543–59–9	Amyl chloride.
110–66–7 [c]	Amyl mercaptans.
1322–06–1	Amyl phenol.
62–53–3	Aniline.
142–04–1	Aniline hydrochloride.
29191–52–4	Anisidine.
100–66–3	Anisole.
118–92–3	Anthranilic acid.
84–65–1	Anthraquinone.
100–52–7	Benzaldehyde.
55–21–0	Benzamide.
71–43–2	Benzene.
98–48–6	Benzenedisulfonic acid.
98–11–3	Benzenesulfonic acid.
134–81–6	Benzil.
76–93–7	Benzilic acid.
65–85–0	Benzoic acid.
119–53–9	Benzoin.
100–47–0	Benzonitrile.
119–61–9	Benzophenone.
98–07–7	Benzotrichloride.
98–88–4	Benzoyl chloride.
100–51–6	Benzyl alcohol.
100–46–9	Benzylamine.
120–51–4	Benzyl benzoate.
100–44–7	Benzyl chloride.
98–87–3	Benzyl dichloride.
92–52–4	Biphenyl.
80–05–7	Bisphenol A.
10–86–1	Bromobenzene.
27497–51–4	Bromonaphthalene.
106–99–0	Butadiene.
106–98–9	1-butene.
123–86–4	n-butyl acetate.
141–32–2	n-butyl acrylate.
71–36–3	n-butyl alcohol.
78–92–2	s-butyl alcohol.
75–65–0	t-butyl alcohol.
109–73–9	n-butylamine.
13952–84–6	s-butylamine.
75–64–9	t-butylamine.
98–73–7	p-tert-butyl benzoic acid.
107–88–0	1,3-butylene glycol.
123–72–8	n-butyraldehyde.
107–92–6	Butyric acid.
106–31–0	Butyric anhydride.
109–74–0	Butyronitrile.
105–60–2	Caprolactam.
75–1–50	Carbon disulfide.
558–13–4	Carbon tetrabromide.
56–23–5	Carbon tetrachloride.
9004–35–7	Cellulose acetate.
79–11–8	Chloroacetic acid.
108–42–9	m-chloroaniline.
95–51–2	o-chloroaniline.
106–47–8	p-chloroaniline.
35913–09–8	Chlorobenzaldehyde.
108–90–7	Chlorobenzene.
118–91–2, 535–80–8, 74–11–3 [c].	Chlorobenzoic acid.
2136–81–4, 2136–89–2, 5216–25–1 [c].	Chlorobenzotrichloride.
1321–03–5	Chlorbenzoyl chloride.
25497–29–4	Chlorodifluoromethane.

CAS No. [a]	Chemical
75–45–6	Chlorodifluoroethane.
67–66–3	Chloroform.
25586–43–0	Chloronapthalene.
88–73–3	o-chloronitrobenzene.
100–00–5	p-chloronitrobenzene.
25167–80–0	Chlorophenols.
126–99–8	Chloroprene.
7790–94–5	Chlorosulfonic acid.
108–41–8	m-chlorotoluene.
95–49–8	o-chlorotoluene.
106–43–4	p-chlorotoluene.
75–72–9	Chlorotrifluoromethane.
108–39–4	m-cresol.
95–48–7	o-cresol.
106–44–5	p-cresol.
1319–77–3	Mixed cresols.
1319–77–3	Cresylic acid.
4170–30–0	Crotonaldehyde.
3724–65–0	Crotonic acid.
98–82–8	Cumene.
80–15–9	Cumene hydroperoxide.
372–09–8	Cyanoacetic acid.
506–77–4	Cyanogen chloride.
108–80–5	Cyanuric acid.
108–77–0	Cyanuric chloride.
110–82–7	Cyclohexane.
108–93–0	Cyclohexanol.
108–94–1	Cyclohexanone.
110–83–8	Cyclohexene.
108–91–8	Cyclohexylamine.
111–78–4	Cyclooctadiene.
112–30–1	Decanol.
123–42–2	Diacetone alcohol.
27576–04–1	Diaminobenzoic acid.
95–76–1, 95–82–9, 554–00–7, 608–27–5, 608–31–1, 626–43–7, 27134–27–6, 57311–92–9 [c].	Dichloroaniline.
541–73–1	m-dichlorobenzene.
95–50–1	o-dichlorobenzene.
106–46–7	p-dichlorobenzene.
75–71–8	Dichlorodifluoromethane.
111–44–4	Dichloroethyl ether.
107–06–2	1,2-dichloroethane (EDC).
96–23–1	Dichlorohydrin.
26952–23–8	Dichloropropene.
101–83–7	Dicyclohexylamine.
109–89–7	Diethylamine.
111–46–6	Diethylene glycol.
112–36–7	Diethylene glycol diethyl ether.
111–96–6	Diethylene glycol dimethyl ether.
112–34–5	Diethylene glycol monobutyl ether.
124–17–7	Diethylene glycol monobutyl ether acetate.
111–90–0	Diethylene glycol monoethyl ether.
112–15–2	Diethylene glycol monoethyl ether acetate.
111–77–3	Diethylene glycol monomethyl ether.
64–67–5	Diethyl sulfate.
75–37–6	Difluoroethane.
25167–70–8	Diisobutylene.
26761–40–0	Diisodecyl phthalate.
27554–26–3	Diisooctyl phthalate.
674–82–8	Diketene.
124–40–3	Dimethylamine.
121–69–7	N,N-dimethylaniline.
115–10–6	N,N-dimethyl ether.
68–12–2	N,N-dimethylformamide.
57–14–7	Dimethylhydrazine.
77–78–1	Dimethyl sulfate.
75–18–3	Dimethyl sulfide.
67–68–5	Dimethyl sulfoxide.
120–61–6	Dimethyl terephthalate.
99–34–3	3,5-dinitrobenzoic acid.
51–28–5	Dinitrophenol.
25321–14–6	Dinitrotoluene.
123–91–1	Dioxane.
646–06–0	Dioxilane.
122–39–4	Diphenylamine.
101–84–8	Diphenyl oxide.
102–08–9	Diphenyl thiourea.
25265–71–8	Dipropylene glycol.
25378–22–7	Dodecene.
28675–17–4	Dodecylaniline.
27193–86–8	Dodecylphenol.
106–89–8	Epichlorohydrin.
64–17–5	Ethanol.
141–43–5 [c]	Ethanolamines.
141–78–6	Ethyl acetate.
141–97–9	Ethyl acetoacetate.
140–88–5	Ethyl acrylate.
75–04–7	Ethylamine.
100–41–4	Ethylbenzene.
74–96–4	Ethyl bromide.
9004–57–3	Ethylcellulose.
75–00–3	Ethyl chloride.
105–39–5	Ethyl chloroacetate.
105–56–6	Ethylcyanoacetate.
74–85–1	Ethylene.
96–49–1	Ethylne carbonate.
107–07–3	Ethylene chlorohydrin.
107–15–3	Ethylenediamine.
106–93–4	Ethylene dibromide.
107–21–1	Ethylene glycol.
111–55–7	Ethylene glycol diacetate.
110–71–4	Ethylene glycol dimethyl ether.
111–76–2	Ethylene glycol monobutyl ether.
112–07–2	Ethylene glycol monobutyl ether acetate.
110–80–5	Ethylene glycol monoethy ether.
111–15–9	Ethylene glycol monethyl ether acetate.
109–86–4	Ethylene glycol monomethyl ether.
110–49–6	Ethylene glycol monomethyl ether acetate.
122–99–6	Ethylene glycol monophenyl ether.
2807–30–9	Ethylene glycol monopropyl ether.
75–21–8	Ethylene oxide.
60–29–7	Ethyl ether
104–76–7	2-ethylhexanol.
122–51–0	Ethyl orthoformate.
95–92–1	Ethyl oxalate.
41892–71–1	Ethyl sodium oxalacetate.
50–00–0	Formaldehyde.
75–12–7	Formamide.
64–18–6	Formic acid.
110–17–8	Fumaric acid.
98–01–1	Furfural.
56–81–5	Glycerol.
26545–73–7	Glycerol dichlorohydrin.
25791–96–2	Glycerol triether.
56–40–6	Glycine.
107–22–2	Glyoxal.
118–74–1	Hexachlorobenzene.
67–72–1	Hexachloroethane.
36653–82–4	Hexadecyl alcohol.
124–09–4	Hexamethylenediamine.
629–11–8	Hexamethylene glycol.
100–97–0	Hexamethylenetetramine.
74–90–8	Hydrogen cyanide.
123–31–9	Hydroquinone.
99–96–7	p-hydroxybenzoic acid.
26760–64–5	Isoamylene.
78–83–1	Isobutanol.
110–19–0	Isobutyl acetate.
115–11–7	Isobutylene.
78–84–2	Isobutyraldehyde.

CAS No. [a]	Chemical
79–31–2	Isobutyric acid.
25339–17–7	Isodecanol.
26952–21–6	Isooctyl alcohol.
78–78–4	Isopentane.
78–59–1	Isophorone..
121–91–5	Isophthalic acid..
78–79–5	Isoprene.
67–63–0	Isopropanol.
108–21–4	Isopropyl acetate.
75–31–0	Isopropylamine.
75–29–6	Isopropyl chloride.
25168–06–3	Isopropylphenol.
463–51–4	Ketene.
[b]	Linear alkyl sulfonate..
123–01–3	Linear alkylbenzene (linear dodecylbenzene)..
110–16–7	Maleic acid.
108–31–6	Maleic anhydride.
6915–15–7	Malic acid.
141–79–7	Mesityl oxide.
121–47–1	Metanilic acid.
79–41–4	Methacrylic acid.
563–47–3	Methallyl chloride.
67–56–1	Methanol.
79–20–9	Methyl acetate.
105–45–3	Methyl acetoacetate.
74–89–5	Methylamine.
100–61–8	n-methylaniline.
74–83–9	Methyl bromide.
37365–71–2	Methyl butynol.
74–87–3	Methyl chloride. .
108–87–2	Methylcyclohexane.
1331–22–2	Methylcyclohexanone.
75–09–2	Methylene chloride.
101–77–9	Methylene dianiline.
101–68–8	Methylene diphenyl diisocyanate.
78–93–3	Methyl ethyl ketone.
107–31–3	Methyl formate.
108–11–2	Methyl isobutyl carbinol.
108–10–1	Methyl isobutyl ketone.
80–62–6	Methyl methacrylate.
77–75–8	Methylpentynol.
98–83–9	a-methylstyrene.
110–91–8	Morpholine.
85–47–2	a-naphthalene sulfonic acid.
120–18–3	b-naphthalene sulfonic acid .
90–15–3	a-naphthol.
135–19–3	b-naphthol.
75–98–9	Neopentanoic acid.
88–74–4	o-nitroaniline.
100–01–6	p-nitroaniline.
91–23–6	o-nitroanisole.
100–17–4	p-nitroanisole.
98–95–3	Nitrobenzene.
27178–83–2[c]	Nitrobenzoic acid (o,m, and p).
79–24–3	Nitroethane.
75–52–5	Nitromethane.
88–75–5	2-Nitrophenol.
25322–01–4	Nitropropane.
1321–12–6	Nitrotoluene.
27215–95–8	Nonene.
25154–52–3	Nonylphenol.
27193–28–8	Octylphenol.
123–63–7	Paraldehyde.
115–77–5	Pentaerythritol.
109–66–0	n-pentane.
109–67–1	1-pentene
127–18–4	Perchloroethylene.
594–42–3	Perchloromethyl mercaptan.
94–70–2	o-phenetidine.
156–43–4	p-phenetidine.
108–95–2	Phenol.
98–67–9, 585–38–6, 609–46–1, 1333–39–7[c]	Phenolsulfonic acids.
91–40–7	Phenyl anthranilic acid.
[b]	Phenylenediamine.
75–44–5	Phosgene.
85–44–9	Phthalic anhydride.
85–41–6	Phthalimide.
108–99–6	b-picoline.
110–85–0	Piperazine.
9003–29–6, 25036–29–7[c]	Polybutenes.
25322–68–3	Polyethylene glycol.
25322–69–4	Polypropylene glycol.
123–38–6	Propional dehyde.
79–09–4	Propionic acid.
71–23–8	n-propyl alcohol.
107–10–8	Propylamine.
540–54–5	Propyl chloride.
115–07–1	Propylene.
127–00–4	Propylene chlorohydrin.
78–87–5	Propylene dichloride.
57–55–6	Propylene glycol.
75–56–9	Propylene oxide.
110–86–1	Pyridine.
106–51–4	Quinone.
108–46–3	Resorcinol.
27138–57–4	Resorcylic acid.
69–72–7	Salicylic acid.
127–09–3	Sodium acetate.
532–32–1	Sodium benzoate.
9004–32–4	Sodium carboxymethyl cellulose.
3926–62–3	Sodium chloroacetate.
141–53–7	Sodium formate.
139–02–6	Sodium phenate.
110–44–1	Sorbic acid.
100–42–5	Styrene..
110–15–6	Succinic acid.
110–61–2	Succinonitrile.
121–57–3	Sulfanilic acid.
126–33–0	Sulfolane.
1401–55–4	Tannic acid.
100–21–0	Terephthalic acid.
79–34–5[c]	Tetrachloroethanes.
117–08–8	Tetrachlorophthalic anhydride.
78–00–2	Tetraethyl lead.
119–64–2	Tetrahydronapthalene.
85–43–8	Tetrahydrophthalic anhydride.
75–74–1	Tetramethyl lead.
110–60–1	Tetramethylenediamine.
110–18–9	Tetramethylethylenediamine.
108–88–3	Toluene.
95–80–7	Toluene-2,4-diamine.
584–84–9	Toluene-2,4-diisocyanate.
26471–62–5	Toluene diisocyanates (mixture).
1333–07–9	Toluenesulfonamide.
104–15–4[c]	Toluenesulfonic acids.
98–59–9	Toluenesulfonyl chloride.
26915–12–8	Toluidines.
87–61–6, 108–70–3, 120–82–1[c]	Trichlorobenzenes.
71–55–6	1,1,1-trichloroethane.
79–00–5	1,1,2-trichloroethane.
79–01–6	Trichloroethylene.
75–69–4	Trichlorofluoromethane.
96–18–4	1,2,3-trichloropropane.
76–13–1	1,1,2-trichloro-1,2,2-trifluoroethane.
121–44–8	Triethylamine.
112–27–6	Triethylene glycol.
112–49–2	Triethylene glycol dimethyl ether.
7756–94–7	Triisobutylene.
75–50–3	Trimethylamine.
57–13–6	Urea.
108–05–4	Vinyl acetate.
75–01–4	Vinyl chloride.
75–35–4	Vinylidene chloride.

CAS No. [a]	Chemical
25013–15–4	Vinyl toluene.
1330–20–7	Xylenes (mixed).
95–47–6	o-xylene.
106–42–3	p-xylene.
1300–71–6	Xylenol.
1300–73–8	Xylidine.

[a] CAS numbers refer to the Chemical Abstracts Registry numbers assigned to specific chemicals, isomers, or mixtures of chemicals. Some isomers or mixtures that are covered by the standards do not have CAS numbers assigned to them. The standards apply to all of the chemicals listed, whether CAS numbers have been assigned or not.

[b] No CAS number(s) have been assigned to this chemical, its isomers, or mixtures containing these chemicals.

[c] CAS numbers for some of the isomers are listed; the standards apply to all of the isomers and mixtures, even if CAS numbers have not been assigned.

Subpart WW—Standards of Performance for the Beverage Can Surface Coating Industry

SOURCE: 48 FR 38737, Aug. 25, 1983, unless otherwise noted.

§ 60.490 Applicability and designation of affected facility.

(a) The provisions of this subpart apply to the following affected facilities in beverage can surface coating lines: each exterior base coat operation, each overvarnish coating operation, and each inside spray coating operation.

(b) The provisions of this subpart apply to each affected facility which is identified in paragraph (a) of this section and commences construction, modification, or reconstruction after November 26, 1980.

§ 60.491 Definitions.

(a) All terms which are used in this subpart and are not defined below are given the same meaning as in the Act and subpart A of this part.

(1) *Beverage can* means any two-piece steel or aluminum container in which soft drinks or beer, including malt liquor, are packaged. The definition does not include containers in which fruit or vegetable juices are packaged.

(2) *Exterior base coating operation* means the system on each beverage can surface coating line used to apply a coating to the exterior of a two-piece beverage can body. The exterior base coat provides corrosion resistance and a background for lithography or printing operations. The exterior base coat operation consists of the coating application station, flashoff area, and curing oven. The exterior base coat may be pigmented or clear (unpigmented).

(3) *Inside spray coating operation* means the system on each beverage can surface coating line used to apply a coating to the interior of a two-piece beverage can body. This coating provides a protective film between the contents of the beverage can and the metal can body. The inside spray coating operation consists of the coating application station, flashoff area, and curing oven. Multiple applications of an inside spray coating are considered to be a single coating operation.

(4) *Overvarnish coating operation* means the system on each beverage can surface coating line used to apply a coating over ink which reduces friction for automated beverage can filling equipment, provides gloss, and protects the finished beverage can body from abrasion and corrosion. The overvarnish coating is applied to two-piece beverage can bodies. The overvarnish coating operation consists of the coating application station, flashoff area, and curing oven.

(5) *Two-piece can* means any beverage can that consists of a body manufactured from a single piece of steel or aluminum and a top. Coatings for a two-piece can are usually applied after fabrication of the can body.

(6) *VOC content* means all volatile organic compounds (VOC) that are in a coating. VOC content is expressed in terms of kilograms of VOC per litre of coating solids.

(b) Notations used under §60.493 of this subpart are defined below:

C_a=the VOC concentration in each gas stream leaving the control device and entering the atmosphere (parts per million as carbon)

C_b=the VOC concentration in each gas stream entering the control device (parts per million as carbon)

D_c=density of each coating, as received (kilograms per litre)

D_d=density of each VOC-solvent added to coatings (kilograms per litre)

D_r=density of VOC-solvent recovered by an emission control device (kilograms per litre)

E=VOC destruction efficiency of the control device (fraction)

F=the proportion of total VOC emitted by an affected facility which enters the control device to total emissions (fraction)

G=the volume-weighted average of VOC in coatings consumed in a calendar month per volume of coating solids applied (kilograms per litre of coating solids)
H_e=the fraction of VOC emitted at the coater and flashoff areas captured by a collection system
H_h=the fraction of VOC emitted at the cure oven captured by a collection system
L_c=the volume of each coating consumed, as received (litres)
L_d=the volume of each VOC-solvent added to coatings (litres)
L_r=the volume of VOC-solvent recovered by an emission control device (litres)
L_s=the volume of coating solids consumed (litres)
M_d=the mass of VOC-solvent added to coatings (kilograms)
M_o=the mass of VOC-solvent in coatings consumed, as received (kilograms)
M_r=the mass of VOC-solvent recovered by emission control device (kilograms)
N=the volume-weighted average mass of VOC emissions to atmosphere per unit volume of coating solids applied (kilograms per litre of coating solids)
Q_a=the volumetric flow rate of each gas stream leaving the control device and entering the atmosphere (dry standard cubic meters per hour)
Q_b=the volumetric flow of each gas stream entering the control device (dry standard cubic meters per hour)
R=the overall emission reduction efficiency for an affected facility (fraction)
S_e=the fraction of VOC in coating and diluent VOC-solvent emitted at the coater and flashoff area for a coating operation
S_h=the fraction of VOC in coating and diluent solvent emitted at the cure oven for a coating operation
V_s=the proportion of solids in each coating, as received (fraction by volume)
W_o=the proportion of VOC in each coating, as received (fraction by weight).

§ 60.492 Standards for volatile organic compounds.

On or after the date on which the initial performance test required by § 60.8(a) is completed, no owner or operator subject to the provisions of this subpart shall discharge or cause the discharge of VOC emissions to the atmoshpere that exceed the following volume-weighted calendar-month average emissions:

(a) 0.29 kilogram of VOC per litre of coating solids from each two-piece can exterior base coating operation, except clear base coat;

(b) 0.46 kilogram of VOC per litre of coating solids from each two-piece can clear base coating operation and from each overvarnish coating operation; and

(c) 0.89 kilogram of VOC per litre of coating solids from each two-piece can inside spray coating operation.

§ 60.493 Performance test and compliance provisions.

(a) Section 60.8(d) does not apply to monthly performance tests and § 60.8(f) does not apply to the performance test procedures required by this subpart.

(b) The owner or operator of an affected facility shall conduct an initial performance test as required under § 60.8(a) and thereafter a performance test each calendar month for each affected facility.

(1) The owner or operator shall use the following procedures for each affected facility that does not use a capture system and a control device to comply with the emission limit specified under § 60.492. The owner or operator shall determine the VOC-content of the coatings from formulation data supplied by the manufacturer of the coating or by an analysis of each coating, as received, using Reference Method 24. The Administrator may require the owner or operator who uses formulation data supplied by the manufacturer of the coating to determine the VOC content of coatings using Reference Method 24 or an equivalent or alternative method. The owner or operator shall determine from company records the volume of coating and the mass of VOC-solvent added to coatings. If a common coating distribution system serves more than one affected facility or serves both affected and exiting facilities, the owner or operator shall estimate the volume of coating used at each facility by using the average dry weight of coating, number of cans, and size of cans being processed by each affected and existing facility or by other procedures acceptable to the Administrator.

(i) Calculate the volume-weighted average of the total mass of VOC per volume of coating solids used during the calendar month for each affected facility, except as provided under paragraph (b)(1)(iv) of this section. The volume-weighted average of the total mass of VOC per volume of coating solids used

each calendar month will be determined by the following procedures.

(A) Calculate the mass of VOC used (M_o+M_d) during the calendar month for the affected facility by the following equation:

$$M_o + M_d = \sum_{i=1}^{n} L_{ci} D_{ci} W_{oi} + \sum_{j=1}^{m} L_{dj} D_{dj}, \qquad (1)$$

[$\Sigma L_{dj} D_{dj}$ will be 0 if no VOC solvent is added to the coatings, as received.] where n is the number of different coatings used during the calendar month and m is the number of different diluent VOC-solvents used during the calendar month.

(B) Calculate the total volume of coating solids used (L_s) in the calendar month for the affected facility by the following equation:

$$L_s = \sum_{i=1}^{n} L_{ci} V_{si}, \qquad (2)$$

where n is the number of different coatings used during the calendar month.

(C) Calculate the volume-weighed average mass of VOC per volume of solids used (G) during the calendar month for the affected facility by the following equation:

$$G = \frac{M_o + M^d}{L^{T2s}} \qquad (3)$$

(ii) Calculate the volume-weighted average of VOC emissions discharged to the atmosphere (N) during the calendar month for the affected facility by the following equation:

$$N = G. \qquad (4)$$

(iii) Where the value of the volume-weighted average of mass of VOC per volume of solids discharged to the atmosphere (N) is equal to or less than the applicable emission limit specified under § 60.492, the affected facility is in compliance.

(iv) If each individual coating used by an affected facility has a VOC content equal to or less than the limit specified under § 60.492, the affected facility is in compliance provided no VOC-solvents are added to the coating during distribution or application.

(2) An owner or operator shall use the following procedures for each affected facility that uses a capture system and a control device that destroys VOC (e.g., incinerator) to comply with the emission limit specified under § 60.492.

(i) Determine the overall reduction efficiency (R) for the capture system and control device.

For the initial performance test, the overall reduction efficiency (R) shall be determined as prescribed in paragraphs (b)(2)(i) (A), (B), and (C) of this section. In subsequent months, the owner or operator may use the most recently determined overall reduction efficiency for the performance test providing control device and capture system operating conditions have not changed. The procedure in paragraphs (b)(2)(i), (A), (B), and (C) of this section, shall be repeated when directed by the Administrator or when the owner or operator elects to operate the control device or capture system at conditions different from the initial performance test.

(A) Determine the fraction (F) of total VOC used by the affected facility that enters the control device using the following equation:

$$F = S_e H_e + S_h H_h, \qquad (5)$$

where H_e an H_h shall be determined by a method that has been previously approved by the Administrator. The owner or operator may use the values of S_e and S_h specified in Table 1 or other values determined by a method that has been previously approved by the Administrator.

TABLE 1—DISTRIBUTION OF VOC EMISSIONS

Coating operation	Emission distribution	
	Coater/ flashoff (S_e)	Curing oven (S_h)
Two-piece aluminum or steel can:		
Exterior base coat operation	0.75	0.25
Overvarnish coating operation ...	0.75	0.25
Inside spray coating operation ...	0.80	0.20

(B) Determine the destruction efficiency of the control device (E) using values of the volumetric flow rate of each of the gas streams and the VOC content (as carbon) of each of the gas streams in and out of the device by the following equation:

$$E = \frac{\sum_{i=1}^{n} Q_{bi} C_{bi} - \sum_{j=1}^{m} Q_{aj} C_{aj}}{\sum_{i=1}^{n} Q_{bi} C_{bi}}, \qquad (6)$$

where n is the number of vents before the control device, and m is the number of vents after the control device.

(C) Determine overall reduction efficiency (R) using the following equation:

$$R = EF \qquad (7)$$

(ii) Calculate the volume-weighted average of the total mass of VOC per volume of coating solids (G) used during the calendar month for the affected facility using equations (1), (2), and (3).

(iii) Calculate the volume-weighted average of VOC emissions discharged to the atmosphere (N) during the calendar month by the following equation:

$$N = G \times [1 - R] \qquad (8)$$

(iv) If the volume-weighted average of mass of VOC emitted to the atmosphere for the calendar month (N) is equal to or less than the applicable emission limit specified under § 60.492, the affected facility is in compliance.

(3) An owner or operator shall use the following procedure for each affected facility that uses a capture system and a control device that recovers the VOC (e.g., carbon adsorber) to comply with the applicable emission limit specified under § 60.492.

(i) Calculate the volume-weighted average of the total mass of VOC per unit volume of coating solids applied (G) used during the calendar month for the affected facility using equations (1), (2), and (3).

(ii) Calculate the total mass of VOC recovered (M_r) during each calendar month using the following equation:

$$M_r = L_r D_r \qquad (9)$$

(iii) Calculate overall reduction efficiency of the control device (R) for the calendar month for the affected facility using the following equation:

$$R = \frac{M_r}{M_o + M_d} \qquad (10)$$

(iv) Calculate the volume-weighted average mass of VOC discharged to the atmosphere (N) for the calendar month for the afffected facility using equation (8).

(v) If the weighted average of VOC emitted to the atmosphere for the calendar month (N) is equal to or less than the applicable emission limit specified under § 60.492, the affected facility is in compliance.

§ 60.494 Monitoring of emissions and operations

The owner or operator of an affected facility that uses a capture system and an incinerator to comply with the emission limits specified under § 60.492 shall install, calibrate, maintain, and operate temperature measurement devices as prescribed below.

(a) Where thermal incineration is used, a temperature measurement device shall be installed in the firebox. Where catalytic incineration is used, temperature measurement devices shall be installed in the gas stream immediately before and after the catalyst bed.

(b) Each temperature measurement device shall be installed, calibrated, and maintained according to the manufacturer's specifications. The device shall have an accuracy the greater of ±0.75 percent of the temperature being measured expressed in degrees Celsius or ±2.5 °C.

(c) Each temperature measurement device shall be equipped with a recording device so that a permanent continuous record is produced.

§ 60.495 Reporting and recordkeeping requirements.

(a) The owner or operator of an affected facility shall include the following data in the initial compliance report required under § 60.8(a).

(1) Where only coatings which individually have a VOC content equal to or less than the limits specified under § 60.492 are used, and no VOC is added to the coating during the application or distribution process, the owner or operator shall provide a list of the coatings used for each affected facility and the VOC content of each coating calculated from data determined using Reference Method 24 or supplies by the manufacturers of the coatings.

(2) Where one or more coatings which individually have a VOC content greater than the limits specified under § 60.492 are used or where VOC are added or used in the coating process, the owner or operator shall report for each affected facility the volume-weighted average of the total mass of VOC per volume of coating solids.

(3) Where compliance is achieved through the use of incineration, the owner or operator shall include in the initial performance test required under § 60.8(a) the combustion temperature (or the gas temperature upstream and downstream of the catalyst bed), the total mass of VOC per volume of coating solids before and after the incinerator, capture efficiency, and the destruction efficiency of the incinerator used to attain compliance with the applicable emission limit specified under § 60.492. The owner or operator shall also include a description of the method used to establish the amount of VOC captured by the capture system and sent to the control device.

(b) Following the initial performance test, each owner or operator shall identify, record, and submit quarterly reports to the Administrator of each instance in which the volume-weighted average of the total mass of VOC per volume of coating solids, after the control device, if capture devices and control systems are used, is greater than the limit specified under § 60.492. If no such instances occur during a particular quarter, a report stating this shall be submitted to the Administrator semiannually.

(c) Following the initial performance test, the owner or operator of an affected facility shall identify, record, and submit at the frequency specified in § 60.7(c) the following:

(1) Where compliance with § 60.492 is achieved through the use of thermal incineration, each 3-hour period when cans are processed, during which the average temperature of the device was more than 28 °C below the average temperature of the device during the most recent performance test at which destruction efficiency was determined as specified under § 60.493.

(2) Where compliance with § 60.492 is achieved through the use of catalytic incineration, each 3-hour period when cans are being processed, during which the average temperature of the device immediately before the catalyst bed is more than 28 °C below the average temperature of the device immediately before the catalyst bed during the most recent performance test at which destruction efficiency was determined as specified under § 60.493 and all 3-hour periods, when cans are being processed, during which the average temperature difference across the catalyst bed is less than 80 percent of the average temperature difference across the catalyst bed during the most recent performance test at which destruction efficiency was determined as specified under § 60.494.

(3) For thermal and catalytic incinerators, if no such periods as described in paragraphs (c)(1) and (c)(2) of this section occur, the owner or operator shall state this in the report.

(d) Each owner or operator subject to the provisions of this subpart shall maintain at the source, for a period of at least 2 years, records of all data and calculations used to determine VOC emissions from each affected facility in the initial and monthly performance tests. Where compliance is achieved through the use of thermal incineration, each owner or operator shall maintain, at the source, daily records of the incinerator combustion chamber temperature. If catalytic incineration

is used, the owner or operator shall maintain at the source daily records of the gas temperature, both upstream and downstream of the incinerator catalyst bed. Where compliance is achieved through the use of a solvent recovery system, the owner or operator shall maintain at the source daily records of the amount of solvent recovered by the system for each affected facility.

(e) The requirements of this section remain in force until and unless EPA, in delegating enforcement authority to a State under section 111(c) of the Act, approves reporting requirements or an alternative means of compliance surveillance adopted by such State. In that event, affected facilities within the State will be relieved of the obligation to comply with this subsection, provided that they comply with the requirements established by the State.

[47 FR 49612, Nov. 1, 1982, as amended at 55 FR 51384, Dec. 13, 1990]

§ 60.496 Test methods and procedures.

(a) The reference methods in appendix A to this part, except as provided in § 60.8, shall be used to conduct performance tests.

(1) Reference Method 24, an equivalent or alternative method approved by the Administrator, or manufacturers formulation for data from which the VOC content of the coatings used for each affected facility can be calculated. In the event of dispute, Reference Method 24 shall be the referee method. When VOC content of waterborne coatings, determined from data generated by Reference Method 24, is used to determine compliance of affected facilities, the results of the Method 24 analysis shall be adjusted as described in section 4.4 of Method 24.

(2) Reference Method 25 or an equivalent or alternative method for the determination of the VOC concentration in the effluent gas entering and leaving the control device for each stack equipped with an emission control device. The owner or operator shall notify the Administrator 30 days in advance of any State test using Reference Method 25. The following reference methods are to be used in conjunction with Reference Method 25:

(i) Method 1 for sample and velocity traverses,

(ii) Method 2 for velocity and volumetric flow rate,

(iii) Method 3 for gas analysis, and

(iv) Method 4 for stack gas moisture.

(b) For Reference Method 24, the coating sample must be a 1-litre sample collected in a 1-litre container at a point where the sample will be representative of the coating material.

(c) For Reference Method 25, the sampling time for each of three runs must be at least 1 hour. The minimum sample volume must be 0.003 dscm except that shorter sampling times or smaller volumes, when necessitated by process variables or other factors, may be approved by the Administrator. The Administrator will approve the sampling of representative stacks on a case-by-case basis if the owner or operator can demonstrate to the satisfaction of the Administrator that the testing of representative stacks would yield results comparable to those that would be obtained by testing all stacks.

Subpart XX—Standards of Performance for Bulk Gasoline Terminals

SOURCE: 48 FR 37590, Aug. 18, 1983, unless otherwise noted.

§ 60.500 Applicability and designation of affected facility.

(a) The affected facility to which the provisions of this subpart apply is the total of all the loading racks at a bulk gasoline terminal which deliver liquid product into gasoline tank trucks.

(b) Each facility under paragraph (a) of this section, the construction or modification of which is commenced after December 17, 1980, is subject to the provisions of this subpart.

(c) For purposes of this subpart, any replacement of components of an existing facility, described in paragraph (a) of this section, commenced before August 18, 1983 in order to comply with any emission standard adopted by a State or political subdivision thereof will not be considered a reconstruction under the provisions of 40 CFR 60.15.

NOTE: The intent of these standards is to minimize the emissions of VOC through the

application of best demonstrated technologies (BDT). The numerical emission limits in this standard are expressed in terms of total organic compounds. This emission limit reflects the performance of BDT.

§ 60.501 Definitions.

The terms used in this subpart are defined in the Clean Air Act, in § 60.2 of this part, or in this section as follows:

Bulk gasoline terminal means any gasoline facility which receives gasoline by pipeline, ship or barge, and has a gasoline throughput greater than 75,700 liters per day. Gasoline throughput shall be the maximum calculated design throughput as may be limited by compliance with an enforceable condition under Federal, State or local law and discoverable by the Administrator and any other person.

Continuous vapor processing system means a vapor processing system that treats total organic compounds vapors collected from gasoline tank trucks on a demand basis without intermediate accumulation in a vapor holder.

Existing vapor processing system means a vapor processing system [capable of achieving emissions to the atmosphere no greater than 80 milligrams of total organic compounds per liter of gasoline loaded], the construction or refurbishment of which was commenced before December 17, 1980, and which was not constructed or refurbished after that date.

Gasoline means any petroleum distillate or petroleum distillate/alcohol blend having a Reid vapor pressure of 27.6 kilopascals or greater which is used as a fuel for internal combustion engines.

Gasoline tank truck means a delivery tank truck used at bulk gasoline terminals which is loading gasoline or which has loaded gasoline on the immediately previous load.

Intermittent vapor processing system means a vapor processing system that employs an intermediate vapor holder to accumulate total organic compounds vapors collected from gasoline tank trucks, and treats the accumulated vapors only during automatically controlled cycles.

Loading rack means the loading arms, pumps, meters, shutoff valves, relief valves, and other piping and valves necessary to fill delivery tank trucks.

Refurbishment means, with reference to a vapor processing system, replacement of components of, or addition of components to, the system within any 2-year period such that the fixed capital cost of the new components required for such component replacement or addition exceeds 50 percent of the cost of a comparable entirely new system.

Total organic compounds means those compounds measured according to the procedures in § 60.503.

Vapor collection system means any equipment used for containing total organic compounds vapors displaced during the loading of gasoline tank trucks.

Vapor processing system means all equipment used for recovering or oxidizing total organic compounds vapors displaced from the affected facility.

Vapor-tight gasoline tank truck means a gasoline tank truck which has demonstrated within the 12 preceding months that its product delivery tank will sustain a pressure change of not more than 750 pascals (75 mm of water) within 5 minutes after it is pressurized to 4,500 pascals (450 mm of water). This capability is to be demonstrated using the pressure test procedure specified in Reference Method 27.

§ 60.502 Standard for Volatile Organic Compound (VOC) emissions from bulk gasoline terminals.

On and after the date on which § 60.8(a) requires a performance test to be completed, the owner or operator of each bulk gasoline terminal containing an affected facility shall comply with the requirements of this section.

(a) Each affected facility shall be equipped with a vapor collection system designed to collect the total organic compounds vapors displaced from tank trucks during product loading.

(b) The emissions to the atmosphere from the vapor collection system due to the loading of liquid product into gasoline tank trucks are not to exceed 35 milligrams of total organic compounds per liter of gasoline loaded, except as noted in paragraph (c) of this section.

(c) For each affected facility equipped with an existing vapor processing system, the emissions to the atmosphere from the vapor collection

system due to the loading of liquid product into gasoline tank trucks are not to exceed 80 milligrams of total organic compounds per liter of gasoline loaded.

(d) Each vapor collection system shall be designed to prevent any total organic compounds vapors collected at one loading rack from passing to another loading rack.

(e) Loadings of liquid product into gasoline tank trucks shall be limited to vapor-tight gasoline tank trucks using the following procedures:

(1) The owner or operator shall obtain the vapor tightness documentation described in §60.505(b) for each gasoline tank truck which is to be loaded at the affected facility.

(2) The owner or operator shall require the tank identification number to be recorded as each gasoline tank truck is loaded at the affected facility.

(3)(i) The owner or operator shall cross-check each tank identification number obtained in paragraph (e)(2) of this section with the file of tank vapor tightness documentation within 2 weeks after the corresponding tank is loaded, unless either of the following conditions is maintained:

(A) If less than an average of one gasoline tank truck per month over the last 26 weeks is loaded without vapor tightness documentation then the documentation cross-check shall be performed each quarter; or

(B) If less than an average of one gasoline tank truck per month over the last 52 weeks is loaded without vapor tightness documentation then the documentation cross-check shall be performed semiannually.

(ii) If either the quarterly or semiannual cross-check provided in paragraphs (e)(3)(i) (A) through (B) of this section reveals that these conditions were not maintained, the source must return to biweekly monitoring until such time as these conditions are again met.

(4) The terminal owner or operator shall notify the owner or operator of each non-vapor-tight gasoline tank truck loaded at the affected facility within 1 week of the documentation cross-check in paragraph (e)(3) of this section.

(5) The terminal owner or operator shall take steps assuring that the non-vapor-tight gasoline tank truck will not be reloaded at the affected facility until vapor tightness documentation for that tank is obtained.

(6) Alternate procedures to those described in paragraphs (e)(1) through (5) of this section for limiting gasoline tank truck loadings may be used upon application to, and approval by, the Administrator.

(f) The owner or operator shall act to assure that loadings of gasoline tank trucks at the affected facility are made only into tanks equipped with vapor collection equipment that is compatible with the terminal's vapor collection system.

(g) The owner or operator shall act to assure that the terminal's and the tank truck's vapor collection systems are connected during each loading of a gasoline tank truck at the affected facility. Examples of actions to accomplish this include training drivers in the hookup procedures and posting visible reminder signs at the affected loading racks.

(h) The vapor collection and liquid loading equipment shall be designed and operated to prevent gauge pressure in the delivery tank from exceeding 4,500 pascals (450 mm of water) during product loading. This level is not to be exceeded when measured by the procedures specified in §60.503(d).

(i) No pressure-vacuum vent in the bulk gasoline terminal's vapor collection system shall begin to open at a system pressure less than 4,500 pascals (450 mm of water).

(j) Each calendar month, the vapor collection system, the vapor processing system, and each loading rack handling gasoline shall be inspected during the loading of gasoline tank trucks for total organic compounds liquid or vapor leaks. For purposes of this paragraph, detection methods incorporating sight, sound, or smell are acceptable. Each detection of a leak shall be recorded and the source of the leak repaired within 15 calendar days after it is detected.

[48 FR 37590, Aug. 18, 1983; 48 FR 56580, Dec. 22, 1983, as amended at 54 FR 6678, Feb. 14, 1989; 64 FR 7466, Feb. 12, 1999]

§ 60.503 Test methods and procedures.

(a) In conducting the performance tests required in § 60.8, the owner or operator shall use as reference methods and procedures the test methods in appendix A of this part or other methods and procedures as specified in this section, except as provided in § 60.8(b). The three-run requirement of § 60.8(f) does not apply to this subpart.

(b) Immediately before the performance test required to determine compliance with § 60.502 (b), (c), and (h), the owner or operator shall use Method 21 to monitor for leakage of vapor all potential sources in the terminal's vapor collection system equipment while a gasoline tank truck is being loaded. The owner or operator shall repair all leaks with readings of 10,000 ppm (as methane) or greater before conducting the performance test.

(c) The owner or operator shall determine compliance with the standards in § 60.502 (b) and (c) as follows:

(1) The performance test shall be 6 hours long during which at least 300,000 liters of gasoline is loaded. If this is not possible, the test may be continued the same day until 300,000 liters of gasoline is loaded or the test may be resumed the next day with another complete 6-hour period. In the latter case, the 300,000-liter criterion need not be met. However, as much as possible, testing should be conducted during the 6-hour period in which the highest throughput normally occurs.

(2) If the vapor processing system is intermittent in operation, the performance test shall begin at a reference vapor holder level and shall end at the same reference point. The test shall include at least two startups and shutdowns of the vapor processor. If this does not occur under automatically controlled operations, the system shall be manually controlled.

(3) The emission rate (E) of total organic compounds shall be computed using the following equation:

$$E = K\sum_{i=1}^{n}\left(V_{esi}C_{ei}\right) / \left(L10^{6}\right)$$

where:

E=emission rate of total organic compounds, mg/liter of gasoline loaded.

V_{esi}=volume of air-vapor mixture exhausted at each interval ''i'', scm.

C_{ei}=concentration of total organic compounds at each interval ''i'', ppm.

L=total volume of gasoline loaded, liters.

n=number of testing intervals.

i=emission testing interval of 5 minutes.

K=density of calibration gas, 1.83×10^{6} for propane and 2.41×10^{6} for butane, mg/scm.

(4) The performance test shall be conducted in intervals of 5 minutes. For each interval ''i'', readings from each measurement shall be recorded, and the volume exhausted (V_{esi}) and the corresponding average total organic compounds concentration (C_{ei}) shall be determined. The sampling system response time shall be considered in determining the average total organic compounds concentration corresponding to the volume exhausted.

(5) The following methods shall be used to determine the volume (V_{esi}) air-vapor mixture exhausted at each interval:

(i) Method 2B shall be used for combustion vapor processing systems.

(ii) Method 2A shall be used for all other vapor processing systems.

(6) Method 25A or 25B shall be used for determining the total organic compounds concentration (C_{ei}) at each interval. The calibration gas shall be either propane or butane. The owner or operator may exclude the methane and ethane content in the exhaust vent by any method (e.g., Method 18) approved by the Administrator.

(7) To determine the volume (L) of gasoline dispensed during the performance test period at all loading racks whose vapor emissions are controlled by the processing system being tested, terminal records or readings from gasoline dispensing meters at each loading rack shall be used.

(d) The owner or operator shall determine compliance with the standard in § 60.502(h) as follows:

(1) A pressure measurement device (liquid manometer, magnehelic gauge, or equivalent instrument), capable of measuring up to 500 mm of water gauge pressure with ±2.5 mm of water precision, shall be calibrated and installed on the terminal's vapor collection system at a pressure tap located as close as possible to the connection with the gasoline tank truck.

(2) During the performance test, the pressure shall be recorded every 5 minutes while a gasoline truck is being loaded; the highest instantaneous pressure that occurs during each loading shall also be recorded. Every loading position must be tested at least once during the performance test.

[54 FR 6678, Feb. 14, 1989; 54 FR 21344, Feb. 14, 1989]

§ 60.504 [Reserved]

§ 60.505 Reporting and recordkeeping.

(a) The tank truck vapor tightness documentation required under § 60.502(e)(1) shall be kept on file at the terminal in a permanent form available for inspection.

(b) The documentation file for each gasoline tank truck shall be updated at least once per year to reflect current test results as determined by Method 27. This documentation shall include, as a minimum, the following information:

(1) Test title: Gasoline Delivery Tank Pressure Test—EPA Reference Method 27.
(2) Tank owner and address.
(3) Tank identification number.
(4) Testing location.
(5) Date of test.
(6) Tester name and signature.
(7) Witnessing inspector, if any: Name, signature, and affiliation.
(8) Test results: Actual pressure change in 5 minutes, mm of water (average for 2 runs).

(c) A record of each monthly leak inspection required under § 60.502(j) shall be kept on file at the terminal for at least 2 years. Inspection records shall include, as a minimum, the following information:

(1) Date of inspection.
(2) Findings (may indicate no leaks discovered; or location, nature, and severity of each leak).
(3) Leak determination method.
(4) Corrective action (date each leak repaired; reasons for any repair interval in excess of 15 days).
(5) Inspector name and signature.

(d) The terminal owner or operator shall keep documentation of all notifications required under § 60.502(e)(4) on file at the terminal for at least 2 years.

(e) [Reserved]

(f) The owner or operator of an affected facility shall keep records of all replacements or additions of components performed on an existing vapor processing system for at least 3 years.

[48 FR 37590, Aug. 18, 1983; 48 FR 56580, Dec. 22, 1983]

§ 60.506 Reconstruction.

For purposes of this subpart:

(a) The cost of the following frequently replaced components of the affected facility shall not be considered in calculating either the ''fixed capital cost of the new components'' or the ''fixed capital costs that would be required to construct a comparable entirely new facility'' under § 60.15: pump seals, loading arm gaskets and swivels, coupler gaskets, overfill sensor couplers and cables, flexible vapor hoses, and grounding cables and connectors.

(b) Under § 60.15, the ''fixed capital cost of the new components'' includes the fixed capital cost of all depreciable components (except components specified in § 60.506(a)) which are or will be replaced pursuant to all continuous programs of component replacement which are commenced within any 2-year period following December 17, 1980. For purposes of this paragraph, ''commenced'' means that an owner or operator has undertaken a continuous program of component replacement or that an owner or operator has entered into a contractual obligation to undertake and complete, within a reasonable time, a continuous program of component replacement.

Subpart AAA—Standards of Performance for New Residential Wood Heaters

SOURCE: 53 FR 5873, Feb. 26, 1988, unless otherwise noted.

§ 60.530 Applicability and designation of affected facility.

(a) The affected facility to which the provisions of this subpart apply is each wood heater manufactured on or after July 1, 1988, or sold at retail on or after July 1, 1990. The provisions of this subpart do not apply to wood heaters constructed prior to July 1, 1988, that are or have been owned by a noncommercial owner for his personal use.

(b) Each affected facility shall comply with the applicable emission limits in § 60.532 unless exempted under paragraph (c), (d), (e), (f), (g) or (h) of this section.

(c)—(d) [Reserved]

(e) Affected facilities manufactured in the U.S. for export are exempt from the applicable emission limits of § 60.532 and the requirements of § 60.533.

(f) A wood heater used for research and development purposes that is never offered for sale or sold is exempt from the applicable emission limits of § 60.532 and the requirements of § 60.533. No more than 50 wood heaters manufactured per model line may be exempted for this purpose.

(g) A coal-only heater is exempt from the applicable emission limits of § 60.532 and the requirements of § 60.533.

(h) The following are not affected facilities and are not subject to this subpart:

(1) Open masonry fireplaces constructed on site,

(2) Boilers,

(3) Furnaces, and

(4) Cookstoves.

(i) Modification or reconstruction, as defined in §§ 60.14 and 60.15 of subpart A, shall not, by itself, make a wood heater an affected facility under this subpart.

[53 FR 5873, Feb. 26, 1988, as amended at 60 FR 33925, June 29, 1995]

§ 60.531 Definitions.

As used in this subpart, all terms not defined herein shall have the meaning given them in the Act and subpart A of this part.

At retail means the sale by a commercial owner of a wood heater to the ultimate purchaser.

Boiler means a solid fuel burning appliance used primarily for heating spaces, other than the space where the appliance is located, by the distribution through pipes of a gas or fluid heated in the appliance. The appliance must be tested and listed as a boiler under accepted American or Canadian safety testing codes. A manufacturer may request an exemption in writing from the Administrator by stating why the testing and listing requirement is not practicable and by demonstrating that his appliance is otherwise a boiler.

Coal-only heater means an enclosed, coal-burning appliance capable of space heating, or domestic water heating, which has all of the following characteristics:

(a) An opening for emptying ash that is located near the bottom or the side of the appliance,

(b) A system that admits air primarily up and through the fuel bed,

(c) A grate or other similar device for shaking or disturbing the fuel bed or power-driven mechanical stoker,

(d) Installation instructions that state that the use of wood in the stove, except for coal ignition purposes, is prohibited by law, and

(e) The model is listed by a nationally recognized safety-testing laboratory for use of coal only, except for coal ignition purposes.

Commercial owner means any person who owns or controls a wood heater in the course of the manufacture, importation, distribution, or sale of the wood heater.

Cookstove means a wood-fired appliance that is designed primarily for cooking food and that has the following characteristics:

(a) An oven, with a volume of 0.028 cubic meters (1 cubic foot) or greater, and an oven rack,

(b) A device for measuring oven temperatures,

(c) A flame path that is routed around the oven,

(d) A shaker grate,

(e) An ash pan,

(f) An ash clean-out door below the oven, and

(g) The absence of a fan or heat channels to dissipate heat from the appliance.

Furnace means a solid fuel burning appliance that is designed to be located outside of ordinary living areas and that warms spaces other than the space where the appliance is located, by the distribution of air heated in the appliance through ducts. The appliance must be tested and listed as a furnace under accepted American or Canadian safety testing codes unless exempted from this provision by the Administrator. A manufacturer may request an exemption in writing from the Administrator by stating why the testing and listing requirement is not practicable

and by demonstrating that his appliance is otherwise a furnace.

Manufactured means completed and ready for shipment (whether or not packaged).

Manufacturer means any person who constructs or imports a wood heater.

Model line means all wood heaters offered for sale by a single manufacturer that are similar in all material respects.

Representative affected facility means an individual wood heater that is similar in all material respects to other wood heaters within the model line it represents.

Sale means the transfer of ownership or control, except that transfer of control shall not constitute a sale for purposes of § 60.530(f).

Similar in all material respects means that the construction materials, exhaust and inlet air system, and other design features are within the allowed tolerances for components identified in § 60.533(k).

Wood heater means an enclosed, wood burning appliance capable of and intended for space heating or domestic water heating that meets all of the following criteria:

(1) An air-to-fuel ratio in the combustion chamber averaging less than 35-to-1 as determined by the test procedure prescribed in § 60.534 performed at an accredited laboratory;

(2) A usable firebox volume of less than 20 cubic feet;

(3) A minimum burn rate of less than 5 kg/hr as determined by the test procedure prescribed in § 60.534 performed at an accredited laboratory; and

(4) A maximum weight of 800 kg. In determining the weight of an appliance for these purposes, fixtures and devices that are normally sold separately, such as flue pipe, chimney, and masonry components that are not an integral part of the appliance or heat distribution ducting, shall not be included.

[53 FR 5873, Feb. 26, 1988, as amended at 64 FR 7466, Feb. 12, 1999]

§ 60.532 Standards for particulate matter.

Unless exempted under § 60.530, each affected facility:

(a) [Reserved]

(b) Manufactured on or after July 1, 1990, or sold at retail on or after July 1, 1992, shall comply with the following particulate matter emission limits as determined by the test methods and procedures in § 60.534:

(1) An affected facility equipped with a catalytic combustor shall not discharge into the atmosphere any gases which contain particulate matter in excess of a weighted average of 4.1 g/hr. Particulate emissions during any test run at any burn rate that is required to be used in the weighted average shall not exceed the value calculated for ''C'' (rounded to 2 significant figures) calculated using the following equation:

(i) At burn rates less than or equal to 2.82 kg/hr,

$C = 3.55\ g/kg \times BR + 4.98\ g/hr$, where

BR=burn rate in kg/hr,

(ii) At burn rates greater than 2.82 kg/hr,

C=15 g/hr.

(2) An affected facility not equipped with a catalytic combustor shall not discharge into the atmosphere any gases which contain particulate matter in excess of a weighted average of 7.5 g/hr. Particulate emissions shall not exceed 15 g/hr during any test run at a burn rate less than or equal to 1.5 kg/hr that is required to be used in the weighted average, and particulate emissions shall not exceed 18 g/hr during any test run at a burn rate greater than 1.5 kg/hr that is required to be used in the weighted average.

[53 FR 5873, Feb. 26, 1988, as amended at 60 FR 33925, June 29, 1995]

§ 60.533 Compliance and certification.

(a) For each model line, compliance with applicable emission limits may be determined based on testing of representative affected facilities within the model line.

(b) Any manufacturer of an affected facility may apply to the Administrator for a certificate of compliance for a model line. The application shall be in writing to: Stationary Source Compliance Division (EN–341), U.S. EPA, 401 M Street, SW., Washington, DC, 20460, Attention: Wood Heater Program. The manufacturer must submit two complete copies of the application and attachments. The application must be signed by the manufacturer, or an

authorized representative, and shall contain the following:

(1) The model name and/or design number,

(2) Two color photographs of the tested unit (or, for models being certified under §60.530(c), photographs of a representative unit), one showing a front view and the other, a side view,

(3)(i) Engineering drawings and specifications of components that may affect emissions (including specifications for each component listed in paragraph (k) of this section). Manufacturers may use complete assembly or design drawings that have been prepared for other purposes, but should designate on the drawings the dimensions of each component listed in paragraph (k) of this section. Manufacturers shall identify tolerances of components of the tested unit listed in paragraph (k)(2) of this section that are different from those specified in that paragraph, and show that such tolerances may not reasonably be anticipated to cause wood heaters in the model line to exceed the applicable emission limits.

(ii) A statement whether the firebox or any firebox component (other than one listed in paragraph (k)(3) of this section) will be composed of different material from the material used for the firebox or firebox component in the wood heater on which certification testing was performed and a description of any such differences.

(iii) For applications to certify a model line of catalytic wood heaters to meet the emission limits in §60.532(b), a statement describing the manufacturer's program to ensure consistency in the size of any gap in the catalyst bypass mechanism. The statement shall describe, in narrative form, the components of the system that affect the size of the gap, any specifications for critical dimensions of any such components, and the procedure the manufacturer will use to ensure consistency in the size of the catalyst bypass gap.

(4) All documentation pertaining to a valid certification test, including the complete test report and, for all test runs: Raw data sheets, laboratory technician notes, calculations, and test results. Documentation shall include the items specified in the applicable test methods. Recommended formats and guidance materials are available from the Administrator.

(5) For catalytic wood heaters, a copy of the catalytic combustor warranty,

(6) A statement that the manufacturer will conduct a quality assurance program for the model line which satisfies the requirements of paragraph (o) of this section,

(7) A statement describing how the tested unit was sealed by the laboratory after the completion of certification testing, and

(8) A statement that the manufacturer will notify the accredited laboratory if the application for certification is granted, within thirty days of receipt of notification from EPA.

(9) Statements that the wood heaters manufactured under this certificate will be—

(i) Similar in all material respects to the wood heater submitted for certification testing, and

(ii) Will be labeled as prescribed in §60.536,

(10) For catalytic wood heaters, a statement that the warranty, access and inspection, and temperature monitoring provisions in paragraphs (c), (d), and (m) of this section will be met,

(11) A statement that the manufacturer will comply with the recordkeeping and reporting requirements in §60.537,

(12) A written estimate of the number of wood heaters that the manufacturer anticipates that he will produce annually for the first two production years. Compliance with this provision may be obtained by designating one of the following ranges:

(i) Less than 2,500,

(ii) 2,500 to 4,999,

(iii) 5,000 to 9,999,

(iv) 10,000 to 49,999, and

(v) 50,000 or greater; and

(13) At the beginning of each test run in a certification test series, two photographs of the fuel load: One before and one after it is placed in the wood heater. One of the photographs shall show the front view of the wood load and the other shall show the side view.

(14) For manufacturers seeking certification of model lines under §60.533(e) to meet the emission limits

in § 60.532(b), a statement that the manufacturer has entered into a contract with an accredited laboratory which satisfies the requirements of paragraph (g) of this section.

(c) If the affected facility is a catalytic wood heater, the warranty for the catalytic combustor shall include the replacement of the combustor and any prior replacement combustor without charge to the consumer for:

(1) 2 years from the date the consumer purchased the heater for any defects in workmanship or materials that prevent the combustor from functioning when installed and operated properly in the wood heater, and

(2) 3 years from the date the consumer purchased the heater for thermal crumbling or disintegration of the substrate material for heaters manufactured after July 1, 1990.

(d) The manufacturer of an affected facility equipped with a catalytic combustor shall provide for a means to allow the owner to gain access readily to the catalyst for inspection or replacement purposes and shall document in his application for certification how the catalyst is replaced.

(e)(1) The Administrator shall issue a certificate of compliance for a model line if he determines, based on all information submitted by the applicant and any other relevant information available to him, that:

(i) A valid certification test has demonstrated that the wood heater representative of the model line complies with the applicable particulate emission limits in § 60.532,

(ii) Any tolerances or materials for components listed in paragraph (k) (2) or (3) of this section that are different from those specified in those paragraphs may not reasonably be anticipated to cause wood heaters in the model line to exceed the applicable emission limits, and

(iii) The requirements of paragraphs (b), (c), (d), and (m) of this section have been met. The program described under paragraph (b)(3)(iii) of this section shall be deemed a tolerance specified in the certified design.

(2) [Reserved]

(3) Upon denying certification under this paragraph, the Administrator shall give written notice to the manufacturer setting forth the basis for his determination.

(f) To be valid, a certification test must be:

(1) Announced to the Administrator in accordance with § 60.534(e),

(2) Conducted by a testing laboratory accredited by the Administrator pursuant to § 60.535,

(3) Conducted on a wood heater similar in all material respects to other wood heaters of the model line that is to be certified, and

(4) Conducted in accordance with the test methods and procedures specified in § 60.534.

(g) To have a wood heater model certified under § 60.533(e) to meet the emission limits in § 60.532(b), a manufacturer must enter into a contract with the accredited laboratory that performed the certification test, under which the laboratory will:

(1) Conduct the random compliance audit test at no cost to the manufacturer if EPA selects that laboratory to conduct the test, or

(2) Pay the manufacturer the reasonable cost of a random compliance audit test (as determined by EPA) if EPA selects any other laboratory to conduct the test.

(h) [Reserved]

(i) An applicant for certification may apply for a waiver of the requirement to submit the results of a certification test pursuant to paragraph (b)(4) of this section, if the wood heaters of the model line are similar in all material respects to another model line that has already been issued a certificate of compliance. A manufacturer that seeks a waiver of certification testing must identify the model line that has been certified, and must submit a copy of an agreement with the owner of the design permitting the applicant to produce wood heaters of that design.

(j)(1) Unless revoked sooner by the Administrator, a certificate of compliance shall be valid:

(i) [Reserved]

(ii) For five years from the date of issuance, for a model line certified as meeting emission limits in § 60.532(b).

(2) Upon application for renewal of certification by the manufacturer, the

Administrator may waive the requirement for certification testing upon determining that the model line continues to meet the requirements for certification in paragraph (e) of this section, or that a waiver of certification is otherwise appropriate.

(3) Upon waiving certification testing under paragraph (j)(2) of this section, the Administrator shall give written notice to the manufacturer setting forth the basis for his determination.

(k)(1) A model line must be recertified whenever any change is made in the design submitted pursuant to §60.533(b)(3) that is presumed to affect the particulate emission rate for that model line. The Administrator may waive this requirement upon written request by the manufacturer, if he determines that the change may not reasonably be anticipated to cause wood heaters in the model line to exceed the applicable emission limits. The grant of such a waiver does not relieve the manufacturer of any compliance obligations under this subpart.

(2) Any change in the indicated tolerances of any of the following components (where such components are applicable) is presumed to affect particulate emissions if that change exceeds ±¼ inch for any linear dimension and ±5 percent for any cross-sectional area relating to air introduction systems and catalyst bypass gaps unless other dimensions and cross-sectional areas are previously approved by the Administrator under paragraph (e)(1)(ii) of this section:

(i) Firebox: Dimensions,

(ii) Air introduction systems: Cross-sectional area of restrictive air inlets, outlets, and location, and method of control,

(iii) Baffles: Dimensions and locations,

(iv) Refractory/insulation: Dimensions and location,

(v) Catalyst: Dimensions and location,

(vi) Catalyst bypass mechanism and, for model lines certified to meet the emissions limits in §60.532(b), catalyst bypass gap tolerances (when bypass mechanism is in closed position): Dimensions, cross-sectional area, and location,

(vii) Flue gas exit: Dimensions and location,

(viii) Door and catalyst bypass gaskets: Dimensions and fit,

(ix) Outer shielding and coverings: Dimensions and location,

(x) Fuel feed system: For wood heaters that are designed primarily to burn wood pellets and other wood heaters equipped with a fuel feed system, the fuel feed rate, auger motor design and power rating, and the angle of the auger to the firebox, and

(xi) Forced air combustion system: For wood heaters so equipped, the location and horsepower of blower motors and the fan blade size.

(3) Any change in the materials used for the following components is presumed to affect emissions:

(i) Refractory/insulation or

(ii) Door and catalyst bypass gaskets.

(4) A change in the make, model, or composition of a catalyst is presumed to affect emissions, unless the change has been approved in advance by the Administrator, based on test data that demonstrate that the replacement catalyst is equivalent to or better than the original catalyst in terms of particulate emission reduction.

(l)(1) The Administrator may revoke certification if he determines that the wood heaters being produced in that model line do not comply with the requirements of this section or §60.532. Such a determination shall be based on all available evidence, including:

(i) Test data from a retesting of the original unit on which the certification test was conducted,

(ii) A finding that the certification test was not valid. The finding must be based on problems or irregularities with the certification test or its documentation, but may be supplemented by other information.

(iii) A finding that the labeling of the wood heater does not comply with the requirements of §60.536,

(iv) Failure by the manufacturer to comply with reporting and record-keeping requirements under §60.537,

(v) Physical examination showing that a significant percentage of production units inspected are not similar in all material respects to the representative affected facility submitted for testing, or

(vi) Failure of the manufacturer to conduct a quality assurance program in conformity with paragraph (o) of this section.

(2) Revocation of certification under this paragraph shall not take effect until the manufacturer concerned has been given written notice by the Administrator setting forth the basis for the proposed determination and an opportunity to request a hearing under § 60.539.

(3) Determination to revoke certification based upon audit testing shall be made only in accordance with paragraph (p) of this section.

(m) A catalytic wood heater shall be equipped with a permanent provision to accommodate a commercially available temperature sensor which can monitor combustor gas stream temperatures within or immediately downstream [within 2.54 centimeters (1 inch)] of the combustor surface.

(n) Any manufacturer of an affected facility subject under § 60.530(b) to the applicable emission limits of this subpart that does not belong to a model line certified under this section shall cause that facility to be tested in an accredited laboratory in accordance with paragraphs (f) (1), (2), and (4) of this section before it leaves the manufacturer's possession and shall report the results to the Administrator.

(o)(1) For each certified model line, the manufacturer shall conduct a quality assurance program which satisfies the following requirements:

(2) Except as provided in paragraph (o)(5) of this section, the manufacturer or his authorized representative shall inspect at least one from every 150 units produced within a model line to determine that the wood heater is within applicable tolerances for all components that affect emissions as listed in paragraph (k)(2) of this section.

(3)(i) Except as provided in paragraph (o)(3)(iii) or (o)(5) of this section, the manufacturer or his authorized representative shall conduct an emission test on a randomly selected affected facility produced within a model line certified under § 60.533 (e) or (h), on the following schedule:

If weighted average certification test results were—	If yearly production per model is—	
	<2500	>2500
70% or less of std	When directed by EPA, not to exceed once every 10,000 stoves.	Every 10,000 stoves or triennially (whichever is more frequent).
Within 30% of std	Every 5,000 stoves	Every 5,000 stoves or annually (whichever is more frequent).

(ii) Emission tests shall be conducted in conformity with § 60.534(a), using either approved method for measuring particulate matter (as provided in § 60.534). The manufacturer shall notify EPA by U.S. mail that an emissions test required pursuant to this paragraph will be conducted within one week of the mailing of the notification.

(iii) If the manufacturer stated pursuant to paragraph (b)(3) of this section that the firebox or any firebox component would be composed of a different material than the material used in the wood heater on which certification testing was performed, the first test shall be performed before 1,000 wood heaters are produced. The manufacturer shall submit a report of the results of this emission test to the Administrator within 45 days of the completion of testing.

(4) The manufacturer shall take remedial measures, as appropriate, when inspection or testing pursuant to paragraph (o) of this section indicate that affected facilities within the model line are not within applicable tolerances or do not comply with applicable emission limit. Manufacturers shall record the problem identified, the extent of the problem, the remedial measures taken, and the effect of such remedial measures as projected by the manufacturer or determined by any additional testing.

(5)(i) If two consecutive passing tests are conducted under either paragraph (o) (2) or (3) of this section, the required frequency of testing under the applicable paragraph shall be modified as follows: Skip every other required test.

(ii) If five consecutive passing tests are conducted under the modified schedule provided for in Paragraph (o)(5)(i) of this section, the required

frequency of testing under the applicable paragraph shall be further modified as follows: Skip three consecutive required tests after each required test that is conducted.

(iii) Testing shall resume on the frequency specified in the paragraph (o)(2) or (3), as applicable, if a test failure results during any test conducted under a modified schedule.

(6) If emissions tests under paragraph (o) of this section are conducted at an altitude different from the altitude at which certification tests were conducted, and are not conducted under pressurized conditions, the results shall be adjusted for altitude in accordance with paragraph (h)(3)(iii) of this section.

(p)(1)(i) The Administrator shall after July 1, 1990, select for random compliance audit testing certified wood heater model lines that have not already been subject to a random compliance audit under this paragraph. The Administrator shall not select more than one model line under this program for every five model lines for which certification is granted under §60.533(e) to meet the emission limits in §60.532(b). No accredited laboratory shall test or bear the expense of testing, as provided in the contract described in paragraph (g) of this section, more than one model line from every five model lines tested by the laboratory for which certification was granted. The Administrator shall use a procedure that ensures that the selection process is random.

(ii) The Administrator may, by means of a neutral selection scheme, select model lines certified under §60.533(e) or §60.533(h) for selective enforcement audit testing under this paragraph. Prior to July 1, 1990, the Administrator shall only select a model line for a selective enforcement audit on the basis of information indicating that affected facilities within the model line may exceed the applicable emission limit in §60.532.

(2) The Administrator shall randomly select for audit testing five production wood heaters from each model line selected under paragraph (p)(1) of this section. These wood heaters shall be selected from completed units ready for shipment from the manufacturer's facility (whether or not the units are in a package or container). The wood heaters shall be sealed upon selection and remain sealed until they are tested or until the audit is completed. The wood heaters shall be numbered in the order that they were selected.

(3)(i) The Administrator shall test, or direct the manufacturer to test, the first of the five wood heaters selected under paragraph (p)(2) of this section in a laboratory accredited under §60.535 that is selected pursuant to paragraph (p)(4) of this section.

(ii) The expense of the random compliance audit test shall be the responsibility of the wood heater manufacturer. A manufacturer may require the laboratory that performed the certification test to bear the expense of a random compliance audit test by means of the contract required under paragraph (g) of this section. If the laboratory with which the manufacturer had a contract has ceased business due to bankruptcy or is otherwise legally unable to honor the contract, the Administrator will not select any of that manufacturer's model lines for which certification testing has been conducted by that laboratory for a random compliance audit test.

(iii) The test shall be conducted using the same test method and procedure used to obtain certification. If the certification test consisted of more than one particulate sampling test method, the Adminstrator may use either one of these methods for the purpose of audit testing. If the test is performed in a pressure vessel, air pressure in the pressure vessel shall be maintained within 1 percent of the average of the barometric pressures recorded for each individual test run used to calculate the weighted average emission rate for the certification test. The Administrator shall notify the manufacturer at least one week prior to any test under this paragraph, and allow the manufacturer and/or his authorized representatives to observe the test.

(4)(i) Except as provided in this paragraph, the Administrator may select any accredited laboratory for audit testing.

(ii)(A) The Administrator shall select the accredited laboratory that performed the test used to obtain certification for audit testing, until the Administrator has amended this subpart, based upon a determination pursuant to paragraph (p)(4)(ii)(B) of this section, to allow testing at another laboratory. If another laboratory is selected pursuant to this paragraph, and the overall precision of the test method and procedure is greater than ±1 gram per hour of the weighted average at laboratories below 304 meters (1,000 feet) elevation (or equivalent), the interlaboratory component of the precision shall be added to the applicable emissions standard for the purposes of this paragraph.

(B) [Reserved]

(iii) The Administrator shall not select an accredited laboratory that is located at an elevation more than 152 meters (500 feet) higher than the elevation of the laboratory which performed the test used to obtain certification, unless the audit test is performed in a pressure vessel.

(5)(i) If emissions from a wood heater tested under paragraph (p)(3) of this section exceed the applicable weighted average emission limit by more than 50 percent, the Administrator shall so notify the manufacturer that certification for that model line is suspended effective 72 hours from the receipt of the notice, unless the suspension notice is withdrawn by the Administrator. The suspension shall remain in effect until withdrawn by the Administrator, or 30 days from its effective date (if a revocation notice under paragraph (p)(5)(ii) of this section is not issued within that period), or the date of final agency action on revocation, whichever occurs earlier.

(ii)(A) If emissions from a wood heater tested under paragraph (p)(3) of this section exceed the applicable weighted average emission limit, the Administrator shall notify the manufacturer that certification is revoked for that model line.

(B) A revocation notice under paragraph (p)(5)(ii)(A) shall become final and effective 60 days after receipt by the manufacturer, unless it is withdrawn, a hearing is requested under § 60.539, or the deadline for requesting a hearing is extended.

(C) The Administrator may extend the deadline for requesting a hearing for up to 60 days for good cause.

(D) A manufacturer may extend the deadline for requesting a hearing for up to six months, by agreeing to a voluntary suspension of certification.

(iii) Any notification under paragraph (p)(5)(i) or (p)(5)(ii) of this section shall include a copy of a preliminary test report from the accredited laboratory. The accredited laboratory shall provide a preliminary test report to the Administrator within 10 days of the completion of testing, if a wood heater exceeds the applicable emission limit in § 60.532. The laboratory shall provide the Administrator and the manufacturer, within 30 days of the completion of testing, all documentation pertaining to the test, including the complete test report and raw data sheets, laboratory technician notes, and test results for all test runs.

(iv) Upon receiving notification of a test failure under paragraph (p)(5)(ii) of this section, the manufacturer may submit some or all of the remaining four wood heaters selected under paragraph (p)(2) of this section for testing at his own expense, in the order they were selected by the Administrator, at the laboratory that performed the emissions test for the Administrator.

(v) Whether or not the manufacturer proceeds under paragraph (p)(5)(iv) of this section, the manufacturer may submit any relevant information to the Administrator, including any other test data generated pursuant to this subpart. The manufacturer shall pay the expense of any testing performed for him.

(vi) The Administrator shall withdraw any notice issued under paragraph (p)(5)(ii) of this section if tests under paragraph (p)(5)(iv) of this section show either—

(A) That all four wood heaters tested for the manufacturer met the applicable weighted average emission limits, or

(B) That the second and third wood heaters selected met the applicable weighted average emission limits and the average of all three weighted averages (including the original audit test)

was below the applicable weighted average emission limits.

(vii) The Administrator may withdraw any proposed revocation, if the Administrator finds that an audit test failure has been rebutted by information submitted by the manufacturer under paragraph (p)(5)(iv) of this section and/or (p)(5)(v) of this section or by any other relevant information available to him.

(viii) Any withdrawal of a proposed revocation shall be accompanied by a document setting forth its basis.

[53 FR 5874, Feb. 26, 1988; 53 FR 14889, Apr. 26, 1988, as amended at 60 FR 33925, June 29, 1995; 63 FR 64874, Nov. 24, 1998]

§ 60.534 Test methods and procedures.

Test methods and procedures in appendix A of this part, except as provided under § 60.8(b), shall be used to determine compliance with the standards and requirements for certification under §§ 60.532 and 60.533 as follows:

(a) Method 28 shall be used to establish the certification test conditions and the particulate matter weighted emission values.

(b) Emission concentrations may be measured with either:

(1) Method 5G, if a dilution tunnel sampling location is used, or

(2) Method 5H, if a stack location is used.

(c) Method 28A shall be used to determine that a wood combustion unit qualifies under the definition of wood heater in § 60.531(a). If such a determination is necessary, this test shall be conducted by an accredited laboratory.

(d) Appendix J is used as an optional procedure in establishing the overall thermal efficiency of wood heaters. (To be proposed separately.)

(e)(1) The manufacturer of an affected facility shall notify the Administrator of the date that certification testing is scheduled to begin. (A notice from the testing lab containing the information required in § 60.533(f)(1) may be used to satisfy this requirement.) This notice shall be at least 30 days before the start of testing. The notification of testing shall be in writing, and include the manufacturer's name and address, the testing laboratory's name, the model name and number (or, if unavailable, some other way to distinguish between models), and the dates of testing.

(2) Any emission testing conducted on the wood heater for which notice was delivered shall be presumed to be certification testing if such testing occurs on or after the scheduled date of testing and before a test report is submitted to the Administrator. If certification testing is interrupted for more than 24 hours, the laboratory shall notify the Administrator by telephone, as soon as practicable, and also by letter, stating why the testing was interrupted and when it is expected to be resumed.

(3) A manufacturer or laboratory may change the date that testing is scheduled to begin by notifying the Administrator at least 14 days before the start of testing. Notification of schedule change shall be made at least two working days prior to the originally scheduled test date. This notice of rescheduling shall be made by telephone or other expeditious means and shall be documented in writing and sent concurrently.

(4) A model line may be withdrawn from testing before the certification test is complete, provided the wood heater is sealed in accordance with § 60.535(g). The manufacturer shall notify the Administrator 30 days before the resumption of testing.

(5) The manufacturer or laboratory shall notify the Administrator if a test is not completed within the time allotted as set forth in the notice of testing. The notification shall be made by the end of the allotted testing period by telephone or other expeditious means, and documented in writing sent concurrently, and shall contain the dates when the test will be resumed. Unless otherwise approved by the Administrator, failure to conduct a certification test as scheduled without notifying the Administrator of any schedule change 14 days prior to the schedule or revised test dates will result in voiding the notification. In the case of a voided notification, the manufacturer shall provide the Administrator with a second notification at least 30 days prior to the new test dates. The

Administrator may waive the requirement for advance notice for test resumptions.

(f) The testing laboratory shall allow the manufacturer to observe certification testing. However, manufacturers shall not involve themselves in the conduct of the test after the pretest burn (as defined by EPA Method 28) has begun. Communications between the manufacturer and laboratory personnel regarding operation of the wood heater shall be limited to written communications transmitted prior to the first pretest burn of the certification series. Written communications between the manufacturer and laboratory personnel may be exchanged during the certification test only if deviations from the test procedures are observed that constitute improper conduct of the test. All communications shall be included in the test documentation required to be submitted under §60.533(b)(4) and shall be consistent with instructions provided in the owner's manual required under §60.536(k), except to the extent that they address details of the certification tests that would not be relevant to owners.

§60.535 Laboratory accreditation.

(a)(1) A laboratory may apply for accreditation by the Administrator to conduct wood heater certification tests pursuant to §60.533. The application shall be in writing to: Emission Measurement Branch (MD–13), U.S. EPA, Research Triangle Park, NC 27711, Attn: Wood Heater Laboratory Accreditation.

(2) [Reserved]

(3) If accreditation is denied under this section, the Administrator shall give written notice to the laboratory setting forth the basis for his determination.

(b) In order for a test laboratory to qualify for accreditation the laboratory must:

(1) Submit its written application providing the information related to laboratory equipment and management and technical experience of laboratory personnel. Applications from laboratories shall establish that:

(i) Laboratory personnel have a total of one year of relevant experience in particulate measurement, including at least three months experience in measuring particulate emissions from wood heaters,

(ii) The laboratory has the equipment necessary to perform testing in accordance with either §60.534(b) (1) or (2), and

(iii) Laboratory personnel have experience in test management or laboratory management.

(2) Have no conflict of interest and receive no financial benefit from the outcome of certification testing conducted pursuant to §60.533,

(3) Agree to enter into a contract as described in §60.533(g) with each wood heater manufacturer for whom a certification test has been performed.

(4) [Reserved]

(5) Demonstrate proficiency to achieve reproducible results with at least one test method and procedure in §60.534(b), by:

(i) Performing a test consisting of at least eight test runs (two in each of the four burn rate categories) on a wood heater identified by the Administrator,

(ii) Providing the Administrator at least 30 days prior notice of the test to afford the Administrator the opportunity to have an observer present, and

(iii) Submitting to the Administrator all documentation pertaining to the test, including a complete test report and raw data sheets, laboratory technical notes, and test results for all test runs,

(6) Be located in the continental United States,

(7) Agree to participate annually in a proficiency testing program conducted by the Administrator,

(8) Agree to allow the Administrator access to observe certification testing,

(9) Agree to comply with a reporting and recordkeeping requirements that affect testing laboratories, and

(10) Agree to accept the reasonable cost of an RCA test (as determined by the Administrator) if it is selected to conduct the RCA test of a model line originally tested for certification at another laboratory.

(c)—(d) [Reserved]

(e)(1) The Administrator may revoke EPA laboratory accreditation if he determines that the laboratory:

(i) No longer satisfies the requirements for accreditation in paragraph (b) or (c),

(ii) Does not follow required procedures or practices,

(iii) Had falsified data or otherwise misrepresented emission data,

(iv) [Reserved]

(v) Failed to participate in a proficiency testing program, in accordance with its commitment under paragraph (b)(5) of this section, or

(vi) Failed to seal the wood heater in accordance with paragraph (g) of this section.

(2) Revocation of accreditation under this paragraph shall not take effect until the laboratory concerned has been given written notice by the Administrator setting forth the basis for the proposed determination and an opportunity for a hearing under §60.539. However, if revocation is ultimately upheld, all tests conducted by the laboratory after written notice was given may, at the discretion of the Administrator, be declared invalid.

(f) Unless revoked sooner, a certificate of accreditation granted by the Administrator shall be valid:

(1) For five years from the date of issuance, for certificates issued under paragraph (b) of this section, or

(2) Until July 1, 1990, for certificates issued under paragraph (c) of this section.

(g) A laboratory accredited by the Administrator shall seal any wood heater on which it performed certification tests, immediately upon completion or suspension of certification testing, by using a laboratory-specific seal.

[53 FR 5873, Feb. 26, 1988, as amended at 60 FR 33925, June 29, 1995]

§60.536 Permanent label, temporary label, and owner's manual.

(a)(1) Each affected facility manufactured on or after July 1, 1988, or offered for sale at retail on or after July 1, 1990, shall have a permanent label affixed to it that meets the requirements of this section.

(2) Except for wood heaters subject to §60.530 (e), (f), or (g), the permanent label shall contain the following information:

(i) Month and year of manufacture,

(ii) Model name or number, and

(iii) Serial number.

(3) The permanent label shall:

(i) Be affixed in a readily visible or accessible location,

(ii) Be at least 3½ inches long and 2 inches wide,

(iii) Be made of a material expected to last the lifetime of the wood heater,

(iv) Present required information in a manner so that it is likely to remain legible for the lifetime of the wood heater, and

(v) Be affixed in such a manner that it cannot be removed from the appliance without damage to the label.

(4) The permanent label may be combined with any other label, as long as the required information is displayed, and the integrity of the permanent label is not compromised.

(b) If the wood heater belongs to a model line certified under §60.533, and has not been found to exceed the applicable emission limits or tolerances through quality assurance testing, one of the following statements, as appropriate, shall appear on the permanent label:

U.S. ENVIRONMENTAL PROTECTION AGENCY

Certified to comply with July, 1988, particulate emission standards.

Not approved for sale after June 30, 1992.

or

U.S. ENVIRONMENTAL PROTECTION AGENCY

Certified to comply with July, 1990, particulate emission standards.

(c)(1) If compliance is demonstrated under §60.530(c), the following statement shall appear on the permanent label:

U.S. ENVIRONMENTAL PROTECTION AGENCY

Certified under 40 CFR 60.530(c). Not approved for sale after June 30, 1992.

(2) If compliance is demonstrated under §60.533(h), one of the following statements, as appropriate, shall appear on the permanent label:

U.S. ENVIRONMENTAL PROTECTION AGENCY

Certified under 40 CFR 60.533(h) to comply with July, 1988 particulate emissions standards. Not approved for sale after June 30, 1992.

or

U.S. ENVIRONMENTAL PROTECTION AGENCY

Certified under 40 CFR 60.533(h), to comply with July, 1990 particulate emissions standards.

(d) Any label statement under paragraph (b) or (c) of this section constitutes a representation by the manufacturer as to any wood heater that bears it:

(1) That certification was in effect at the time the wood heater left the possession of the manufacturer,

(2) That the manufacturer was, at the time the label was affixed, conducting a quality assurance program in conformity with § 60.533(o),

(3) That as to any wood heater individually tested for emissions by the manufacturer under § 60.533(o)(3), that it met the applicable emissions limits, and

(4) That as to any wood heater individually inspected for tolerances under § 60.533(o)(2), that the wood heater is within applicable tolerances.

(e) If an affected facility is exempt from the emission limits in § 60.532 under the provisions of § 60.530(d), the following statement shall appear on the permanent label:

U.S. ENVIRONMENTAL PROTECTION AGENCY

Not certified. Approved for sale until June 30, 1991.

(f)(1) If an affected facility is manufactured in the U.S. for export, the following statement shall appear on the permanent label:

U.S. ENVIRONMENTAL PROTECTION AGENCY

Export stove. May not be operated within the United States.

(2) If an affected facility is manufactured for use for research and development purposes as provided in § 60.530(f), the following statement shall appear on the permanent label:

U.S. ENVIRONMENTAL PROTECTION AGENCY

Not certified. Research Stove. Not approved for sale.

(3) If an appliance is a coal-only heater as defined in § 60.530, the following statement shall appear on the permanent label:

U.S. ENVIRONMENTAL PROTECTION AGENCY

This heater is only for burning coal. Use of any other solid fuel except for coal ignition purposes is a violation of Federal law.

(g) Any affected facility that does not qualify for labeling under any of paragraphs (b) through (f) of this section shall bear one of the following labels:

(1) If the test conducted under § 60.533(n) indicates that the facility does not meet applicable emissions limits:

U.S. ENVIRONMENTAL PROTECTION AGENCY

Not certified. Does not meet EPA particulate emission standards. IT IS AGAINST THE LAW TO OPERATE THIS WOOD HEATER.

(2) If the test conducted under § 60.533(n) indicates that the facility does meet applicable emissions limits:

U.S. ENVIRONMENTAL PROTECTION AGENCY

Not certified. Meets EPA particulate emission standards.

(3) If the facility has not been tested as required by § 60.533(e):

U.S. ENVIRONMENTAL PROTECTION AGENCY

Not certified. Not tested. Not approved for sale. IT IS AGAINST THE LAW TO OPERATE THIS WOOD HEATER.

(h) For affected facilities equipped with catalytic combustors, the following statement shall appear on the permanent label:

This wood heater contains a catalytic combustor, which needs periodic inspection and replacement for proper operation. Consult owner's manual for further information. It is against the law to operate this wood heater in a manner inconsistent with operating instructions in the owner's manual, or if the catalytic element is deactivated or removed.

(i) An affected facility permanently labeled under paragraph (b) or (c) of this section shall have attached to it a temporary label that shall contain only the following:

(1) A statement indicating the compliance status of the model. The statement shall be one of the statements provided in appendix I, section 2.2.1. Instructions on the statement to select are provided in appendix I.

(2) A graphic presentation of the composite particulate matter emission rate as determined in the certification test, or as determined by the Administrator if the wood heater is certified under §60.530(c). The method for presenting this information is provided in appendix I, section 2.2.2.

(3) A graphic presentation of the overall thermal efficiency of the model. The method for presenting this information is provided in appendix I, section 2.2.3. At the discretion of the manufacturer, either the actual measured efficiency of the model or its estimated efficiency may be used for purposes of this paragraph. The actual efficiency is the efficiency measured in tests conducted pursuant to §60.534(d). The estimated efficiency shall be 72 percent if the model is catalyst-equipped and 63 percent if the model is not catalyst equipped, and 78 percent if the model is designed to burn wood pellets for fuel. Wood heaters certified under §60.530(c) shall use these estimated efficiencies.

(4) A numerical expression of the heat output range of the unit, in British thermal units per hour (Btu/hr) rounded to the nearest 100 Btu/hr.

(i) If the manufacturer elects to report the overall efficiency of the model based on test results pursuant to paragraph (i)(3) of this section, he shall report the heat output range measured during the efficiency test. If an accessory device is used in the certification test to achieve any low burn rate criterion specified in this subpart, and if this accessory device is not sold as a part of the wood heater, the heat output range shall be determined using the formula in paragraph (i)(4)(ii) of this section based upon the lowest sustainable burn rate achieved without the accessory device.

(ii) If the manufacturer elects to use the estimated efficiency as provided in paragraph (i)(3) of this section, he shall estimate the heat output of the model as follows:

$HO_E = (19{,}140) \times (\text{Estimated overall efficiency}/100) \times BR$, where

HO_E = Estimated heat output in Btu/hr

BR = Burn rate in dry kilograms of test fuel per hour

(5) Statements regarding the importance of operation and maintenance. (Instructions regarding which statements must be used are provided in appendix I, section 2.), and

(6) The manufacturer and the identification of the model.

(j)(1) An affected facility permanently labeled under paragraph (e), (f)(3), or (g) of this section have attached to it a temporary label that shall contain only the information provided for in appendix I, section 2.3, 2.4, or 2.5, as applicable.

(2) The temporary label of an affected facility permently labeled under paragraph (b), (c), (e), (f)(3), or (g) of this section shall:

(i) Be affixed to a location on the wood heater that is readily seen and accessible when the wood heater is offered for sale to consumers by any commercial owner;

(ii) Not be combined with any other label or information;

(iii) Be attached to the wood heater in such a way that it can be easily removed by the consumer upon purchase, except that the label on wood heaters displayed by a commercial owner may have an adhesive backing or other means to preserve the label to prevent its removal or destruction;

(iv) Be printed on 90 pound bond paper in black ink with a white background except that those for models that are not otherwise exempted which do not meet the applicable emission limits, or have not been tested pursuant to this subpart, shall be on a red background as described in appendix I, section 2.5;

(v) Have dimensions of five inches by seven inches as described in appendix I, section 2.1;

(vi) Have wording, presentation of the graphic data, and typography as presented in appendix I.

(k)(1) Each affected facility offered for sale by a commercial owner must be accompanied by an owner's manual that shall contain the information listed in paragraph (k)(2) of this section (pertaining to installation), and paragraph (k)(3) of this section (pertaining to operation and maintenance) of this section. Such information shall be adequate to enable consumers to achieve optimal emissions performance. Such information shall be consistent with the operating instructions provided by the manufacturer to the laboratory for operating the wood heater during certification testing, except for details of the certification test that would not be relevant to the ultimate purchaser.

(2) Installation information: Requirements for achieving proper draft.

(3) Operation and maintenance information:

(i) Wood loading procedures, recommendations on wood selection, and warnings on what fuels not to use, such as treated wood, colored paper, cardboard, solvents, trash and garbage,

(ii) Fire starting procedures,

(iii) Proper use of air controls,

(iv) Ash removal procedures,

(v) Instructions on gasket replacement,

(vi) For catalytic models, information on the following pertaining to the catalytic combustor: Procedures for achieving and maintaining catalyst activity, maintenance procedures, procedures for determining deterioration or failure, procedures for replacement, and information on how to exercise warranty rights, and

(vii) For catalytic models, the following statement—

This wood heater contains a catalytic combustor, which needs periodic inspection and replacement for proper operation. It is against the law to operate this wood heater in a manner inconsistent with operating instructions in this manual, or if the catalytic element is deactivated or removed.

(4) Any manufacturer using EPA model language contained in appendix I to satisfy any requirement of this paragraph shall be in compliance with that requirement, provided that the particular model language is printed in full, with only such changes as are necessary to ensure accuracy for the particular model line.

(l) Wood heaters that are affected by this subpart, but that have been owned and operated by a noncommercial owner, are not subject to paragraphs (j) and (k) of this section when offered for resale.

[53 FR 5873, Feb. 26, 1988, as amended at 53 FR 12009, Apr. 12, 1988; 64 FR 7466, Feb. 12, 1999]

§ 60.537 Reporting and recordkeeping.

(a)(1) Each manufacturer who holds a certificate of compliance under § 60.533(e) or (h) for a model line shall maintain records containing the information required by this paragraph with respect to that model line. Each manufacturer of a model line certified under § 60.530(c) shall maintain the information required by paragraphs (a)(3) and (a)(5) of this section for that model line.

(2)(i) All documentation pertaining to the certification test used to obtain certification, including the full test report and raw data sheets, laboratory technician notes, calculations, and the test results for all test runs.

(ii) Where a model line is certified under § 60.533(h) and later certified under § 60.533(e), all documentation pertaining to the certification test used to obtain certification in each instance shall be retained.

(3) For parameter inspections conducted pursuant to § 60.533(o)(2), information indicating the extent to which tolerances for components that affect emissions as listed in § 60.533(k)(2) were inspected, and at what frequency, the results of such inspections, remedial actions taken, if any, and any follow-up actions such as additional inspections,

(4) For emissions tests conducted pursuant to § 60.533(o)(3), all test reports, data sheets, laboratory technician notes, calculations, and test results for all test runs, the remedial actions taken, if any, and any follow-up actions such as additional testing,

(5) The number of affected facilities that are sold each year, by certified model line,

(b)(1) Each accredited laboratory shall maintain records consisting of all documentation pertaining to each certification test, including the full test report and raw data sheets, technician

notes, calculations, and the test results for all test runs.

(2) [Reserved]

(3) Each accredited laboratory shall report to the Administrator within 24 hours whenever a manufacturer which has notified the laboratory that it intends to apply for alternative certification for a model line fails to submit on schedule a representative unit of that model line for certification testing.

(c) Any wood heater upon which certification tests were performed based upon which certification was granted under §60.533(e) shall be retained (sealed and unaltered) at the manufacturer's facility for as long as the model line in question is manufactured. Any such wood heater shall be made available upon request to the Administrator for inspection and testing.

(d)—(e) [Reserved]

(f) Each manufacturer of an affected facility certified under §60.533 shall submit a report to the Administrator every 2 years following issuance of a certificate of compliance for each model line. This report shall certify that no changes in the design or manufacture of this model line have been made that require recertification under §60.533(k).

(g) Each manufacturer shall maintain records of the model and number of wood heaters exempted under §60.530(f).

(h) Each commercial owner of a wood heater previously owned by a noncommercial owner for his personal use shall maintain records of the name and address of the previous owner.

(i)(1) Unless otherwise specified, all records required under this section shall be maintained by the manufacturer or commercial owner of the affected facility for a period of no less than 5 years.

(2) Unless otherwise specified, all reports to the Administrator required under this subpart shall be made to: Stationary Source Compliance Division (EN–341), U.S. EPA, 401 M Street SW., Washington, DC, 20460 Attention: Wood Heater Program.

(3) A report to the Administrator required under this subpart shall be deemed to have been made when it is properly addressed and mailed, or placed in the possession of a commercial courier service.

[53 FR 5873, Feb. 26, 1988, as amended at 60 FR 33925, June 29, 1995]

§60.538 Prohibitions.

(a) No person shall operate an affected facility that does not have affixed to it a permanent label pursuant to §60.536 (b), (c), (e), (f)(2), (f)(3), or (g)(2).

(b) No manufacturer shall advertise for sale, offer for sale, or sell an affected facility that—

(1) Does not have affixed to it a permanent label pursuant to §60.536, and

(2) Has not been tested when required by §60.533(n).

(c) On or after July 1, 1990, no commercial owner shall advertise for sale, offer for sale, or sell an affected facility that does not have affixed to it a permanent label pursuant to §60.536 (b), (c), (e), (f)(1), (f)(3), (g)(1) or (g)(2). No person shall advertise for sale, offer for sale, or sell an affected facility labeled under §60.536(f)(1) except for export.

(d)(1) No commercial owner shall advertise for sale, offer for sale or sell an affected facility permanently labeled under §60.536 (b) or (c) unless:

(i) The affected facility has affixed to it a removable label pursuant to §60.536 of this subpart,

(ii) He provides any purchaser or transferee with an owner's manual pursuant to §60.536(k) of this subpart, and

(iii) He provides any purchaser or transferee with a copy of the catalytic combustor warranty (for affected facilities with catalytic combustors).

(2) No commercial owner shall advertise for sale, offer for sale, or sell an affected facility permanently labeled under §60.536 (e), (f)(3), or (g), unless the affected facility has affixed to it a removable label pursuant to §60.536 of this subpart. This prohibition does not apply to wood heaters affected by this subpart that have been previously owned and operated by a noncommercial owner.

(3) A commercial owner other than a manufacturer complies with the requirements of paragraph (d) of this section if he—

(i) Receives the required documentation from the manufacturer or a previous commercial owner and

(ii) Provides that documentation unaltered to any person to whom the wood heater that it covers is sold or transferred.

(e)(1) In any case in which the Administrator revokes a certificate of compliance either for the knowing submission of false or inaccurate information or other fraudulent acts, or based on a finding under § 60.533(l)(1)(ii) that the certification test was not valid, he may give notice of that revocation and the grounds for it to all commercial owners.

(2) From and after the date of receipt of the notice given under paragraph (e)(1) of this section, no commercial owner may sell any wood heater covered by the revoked certificate (other than to the manufacturer) unless

(i) The wood heater has been tested as required by § 60.533(n) and labeled as required by § 60.536(g) or

(ii) The model line has been recertified in accordance with this subpart.

(f) No person shall install or operate an affected facility except in a manner consistent with the instructions on its permanent label and in the owner's manual pursuant to § 60.536(l) of this subpart.

(g) No person shall operate an affected facility which was originally equipped with a catalytic combustor if the catalytic element is deactivated or removed.

(h) No person shall operate an affected facility that has been physically altered to exceed the tolerance limits of its certificate of compliance.

(i) No person shall alter, deface, or remove any permanent label required to be affixed pursuant to § 60.536 of this subpart.

[53 FR 5873, Feb. 26, 1988; 53 FR 14889, Apr. 26, 1988, as amended at 63 FR 64874, Nov. 24, 1998]

§ 60.539 Hearing and appeal procedures.

(a)(1) In any case where the Administrator—

(i) Denies an application under § 60.530(c) or § 60.533(e),

(ii) Issues a notice of revocation of certification under § 60.533(l),

(iii) Denies an application for laboratory accreditation under § 60.535, or

(iv) Issues a notice of revocation of laboratory accreditation under § 60.535(e), the manufacturer or laboratory affected may request a hearing under this section within 30 days following receipt of the required notification of the action in question.

(2) In any case where the Administrator issues a notice of revocation under § 60.533(p), the manufacturer may request a hearing under this section with the time limits set out in § 60.533(p)(5).

(b) Any hearing request shall be in writing, shall be signed by an authorized representative of the petitioning manufacturer or laboratory, and shall include a statement setting forth with particularity the petitioner's objection to the Administrator's determination or proposed determination.

(c)(1) Upon receipt of a request for a hearing under paragraph (a) of this section, the Administrator shall request the Chief Administrative Law Judge to designate an Administrative Law Judge as Presiding Officer for the hearing. If the Chief Administrative Law Judge replies that no Administrative Law Judge is available to perform this function, the Administrator shall designate a Presiding Officer who has not had any prior responsibility for the matter under review, and who is not subject to the direct control or supervision of someone who has had such responsibility.

(2) The hearing shall commence as soon as practicable at a time and place fixed by the Presiding Officer.

(3)(i) A motion for leave to intervene in any proceeding conducted under this section must set forth the grounds for the proposed intervention, the position and interest of the movant and the likely impact that intervention will have on the expeditious progress of the proceeding. Any person already a party to the proceeding may file an answer to a motion to intervene, making specific reference to the factors set forth in the foregoing sentence and paragraph (c)(3)(iii) of this section within ten (10) days after service of the motion for leave to intervene.

(ii) A motion for leave to intervene in a proceeding must ordinarily be filed before the first prehearing conference or, in the absence of a prehearing conference, prior to the setting of a time and place for a hearing. Any motion

filed after that time must include, in addition to the information set forth in paragraph (c)(3)(i) of this section, a statement of good cause for the failure to file in a timely manner. The intervenor shall be bound by any agreements, arrangements and other matters previously made in the proceeding.

(iii) A motion for leave to intervene may be granted only if the movant demonstrates that his presence in the proceeding would not unduly prolong or otherwise prejudice the adjudication of the rights of the original parties, and that movant may be adversely affected by a final order. The intervenor shall become a full party to the proceeding upon the granting of leave to intervene.

(iv) Persons not parties to the proceeding may move for leave to file amicus curiae briefs. The movant shall state his interest and the reasons why the proposed amicus brief is desirable. If the motion is granted, the Presiding Officer or Administrator shall issue an order setting the time for filing such brief. An amicus curia may participate in any briefing after his motion is granted, and shall be served with all briefs, reply briefs, motions, and orders relating to issues to be briefed.

(4) In computing any period of time prescribed or allowed in this subpart, the day of the event from which the designated period begins to run shall not be included. Saturdays, Sundays, and Federal legal holidays shall be included. When a stated time expires on a Saturday, Sunday or legal holiday, the stated time period shall be extended to include the next business day.

(d)(1) Upon his appointment the Presiding Officer shall establish a hearing file. The file shall consist of the notice issued by the Administrator under §60.530(c), §60.533(e), §60.533(l), §60.533(p), §60.535(a), or §60.535(e), together with any accompanying material, the request for a hearing and the supporting data submitted therewith, and all documents relating to the request for certification or accreditation, or the proposed revocation of either.

(2) The hearing file shall be available for inspection by any party, to the extent authorized by law, at the office of the Presiding Officer, or other place designated by him.

(e) Any party may appear in person, or may be represented by counsel or by any other duly authorized representative.

(f)(1) The Presiding Officer upon the request of any party, or at his discretion, may order a prehearing conference at a time and place specified by him to consider the following:

(i) Simplification of the issues,

(ii) Stipulations, admissions of fact, and the introduction of documents,

(iii) Limitation of the number of expert witnesses,

(iv) Possibility of agreement disposing of all or any of the issues in dispute,

(v) Such other matters as may aid in the disposition of the hearing, including such additional tests as may be agreed upon by the parties.

(2) The results of the conference shall be reduced to writing by the Presiding Officer and made part of the record.

(g)(1) Hearings shall be conducted by the Presiding Officer in an informal but orderly and expeditious manner. The parties may offer oral or written evidence, subject to the exclusion by the Presiding Officer of irrelevant, immaterial and repetitious evidence.

(2) Witnesses will not be required to testify under oath. However, the Presiding Officer shall call to the attention of witnesses that their statements may be subject to penalties under title 18, U.S.C. 1001 for knowingly making false statements or representations or using false documents in any matter within the jurisdiction of any department or agency of the United States.

(3) Any witness may be examined or cross-examined by the Presiding Officer, the parties, or their representatives.

(4) Hearings shall be recorded verbatim. Copies of transcripts of proceedings may be purchased by the applicant from the reporter.

(5) All written statements, charts, tabulations, and similar data offered in evidence at the hearings shall, upon a showing satisfactory to the Presiding Officer of their authenticity, relevancy, and materiality, be received in evidence and shall constitute a part of the record.

(h)(1) The Presiding Officer shall make an initial decision which shall include written findings and conclusions and the reasons or basis therefor on all the material issues of fact, law, or discretion presented on the record. The findings, conclusions, and written decision shall be provided to the parties and made a part of the record. The initial decision shall become the decision of the Environmental Appeals Board without further proceedings unless there is an appeal to the Environmental Appeals Board or motion for review by the Environmental Appeals Board. Except as provided in paragraph (h)(3) of this section, any such appeal shall be taken within 20 days of the date the initial decision was filed.

(2) The Administrator delegates authority to the Environmental Appeals Board to issue final decisions in appeals filed under this section. An appeal directed to the Administrator, rather than to the Environmental Appeals Board, will not be considered. This delegation of authority to the Environmental Appeals Board does not preclude the Environmental Appeals Board from referring an appeal or a motion filed under this part to the Administrator for decision when the Environmental Appeals Board, in its discretion, deems it appropriate to do so. When an appeal or motion is referred to the Administrator, all parties shall be so notified and the rules in this section referring to the Environmental Appeals Board shall be interpreted as referring to the Administrator. On appeal from or review of the initial decision, the Environmental Appeals Board shall have all the powers that it would have in making the initial decision including the discretion to require or allow briefs, oral argument, the taking of additional evidence or the remanding to the Presiding Officer for additional proceedings. The decision by the Environmental Appeals Board shall include written findings and conclusions and the reasons or basis therefor on all the material issues of fact, law, or discretion presented on the appeal or considered in the review.

(3) In any hearing requested under paragraph (a)(2) of this section the Presiding Officer shall render his initial decision within 60 days of that request. Any appeal to the Environmental Appeals Board shall be taken within 10 days of the initial decision, and the Environmental Appeals Board shall render its decision in the appeal within 30 days of the filing of the appeal.

[53 FR 5873, Feb. 26, 1988, as amended at 57 FR 5328, Feb. 13, 1992]

§ 60.539a Delegation of authority.

(a) In delegating implementation and enforcement authority to a State under section 111(c) of the Act, the authorities contained in paragraph (b) of this section shall be retained by the Administrator and not transferred to a State.

(b) Authorities that shall not be delegated to states:

(1) [Reserved]

(2) Section 60.531, Definitions,

(3) Section 60.533, Compliance and certification,

(4) Section 60.534, Test methods and procedures,

(5) Section 60.535, Laboratory accreditation,

(6) Section 60.536(i)(2), determination of emission rates for purposes of labeling wood heaters certified under § 60.530(c),

(7) Section 60.537, Reporting and recordkeeping,

(8) Section 60.538(e), revocation of certification, and

(9) Section 60.539, Hearings and appeals procedures.

[53 FR 5873, Feb. 26, 1988, as amended at 60 FR 33925, June 29, 1995]

§ 60.539b General provisions exclusions.

The following provisions of subpart A of part 60 do not apply to this subpart:

(a) Section 60.7,

(b) Section 60.8(a), (c), (d), (e), and (f), and

(c) Section 60.15(d).

Subpart BBB—Standards of Performance for the Rubber Tire Manufacturing Industry

SOURCE: 52 FR 34874, Sept. 15, 1987, unless otherwise noted.

§ 60.540 Applicability and designation of affected facilities.

(a) The provisions of this subpart, except as provided in paragraph (b) of this section, apply to each of the following affected facilities in rubber tire manufacturing plants that commence construction, modification, or reconstruction after January 20, 1983: each undertread cementing operation, each sidewall cementing operation, each tread end cementing operation, each bead cementing operation, each green tire spraying operation, each Michelin-A operation, each Michelin-B operation, and each Michelin-C automatic operation.

(b) The owner or operator of each undertread cementing operation and each sidewall cementing operation in rubber tire manufacturing plants that commenced construction, modification, or reconstruction after January 20, 1983, and before September 15, 1987, shall have the option of complying with the alternate provisions in § 60.542a. This election shall be irreversible. The alternate provisions in § 60.542a do not apply to any undertread cementing operation or sidewall cementing operation that is modified or reconstructed after September 15, 1987. The affected facilities in this paragraph are subject to all applicable provisions of this subpart.

(c) Although the affected facilities listed under § 60.540(a) are defined in reference to the production of components of a ''tire,'' as defined under § 60.541(a), the percent emission reduction requirements and VOC use cutoffs specified under § 60.542(a)(1), (2), (6), (7)(iii), (7)(iv), (8), (9), and (10) refer to the total amount of VOC used (the amount allocated to the affected facility), including the VOC used in cements and organic solvent-based green tire spray materials for tire types not listed in the § 60.541(a) definition of ''tire.''

[52 FR 34874, Sept. 15, 1987, as amended at 54 FR 38635, Sept. 19, 1989]

§ 60.541 Definitions.

(a) All terms that are used in this subpart and are not defined below are given the same meaning as in the Act and in subpart A of this part.

Bead means rubber-covered strands of wire, wound into a circular form, which ensure a seal between a tire and the rim of the wheel onto which the tire is mounted.

Bead cementing operation means the system that is used to apply cement to the bead rubber before or after it is wound into its final circular form. A bead cementing operation consists of a cement application station, such as a dip tank, spray booth and nozzles, cement trough and roller or swab applicator, and all other equipment necessary to apply cement to wound beads or bead rubber and to allow evaporation of solvent from cemented beads.

Component means a piece of tread, combined tread/sidewall, or separate sidewall rubber, or other rubber strip that is combined into the sidewall of a finished tire.

Drying area means the area where VOC from applied cement or green tire sprays is allowed to evaporate.

Enclosure means a structure that surrounds a VOC (cement, solvent, or spray) application area and drying area, and that captures and contains evaporated VOC and vents it to a control device. Enclosures may have permanent and temporary openings.

Green tire means an assembled, uncured tire.

Green tire spraying operation means the system used to apply a mold release agent and lubricant to the inside and/or outside of green tires to facilitate the curing process and to prevent rubber from sticking to the curing press. A green tire spraying operation consists of a booth where spraying is performed, the spray application station, and related equipment, such as the lubricant supply system.

Michelin-A operation means the operation identified as Michelin-A in the Emission Standards and Engineering Division confidential file as referenced in Docket A–80–9, Entry II–B–12.

Michelin-B operation means the operation identified as Michelin-B in the Emission Standards and Engineering Division confidential file as referenced in Docket A–80–9, Entry II–B–12.

Michelin-C-automatic operation means the operation identifed as Michelin-C-automatic in the Emission Standards and Engineering Division confidential

file as referenced in Docket A–80–9, Entry II–B–12.

Month means a calendar month or a prespecified period of 28 days or 35 days (utilizing a 4–4–5-week recordkeeping and reporting schedule).

Organic solvent-based green tire spray means any mold release agent and lubricant applied to the inside or outside of green tires that contains more than 12 percent, by weight, of VOC as sprayed.

Permanent opening means an opening designed into an enclosure to allow tire components to pass through the enclosure by conveyor or other mechanical means, to provide access for permanent mechanical or electrical equipment, or to direct air flow into the enclosure. A permanent opening is not equipped with a door or other means of obstruction of air flow.

Sidewall cementing operation means the system used to apply cement to a continuous strip of sidewall component or any other continuous strip component (except combined tread/sidewall component) that is incorporated into the sidewall of a finished tire. A sidewall cementing operation consists of a cement application station and all other equipment, such as the cement supply system and feed and takeaway conveyors, necessary to apply cement to sidewall strips or other continuous strip component (except combined tread/sidewall component) and to allow evaporation of solvent from the cemented rubber.

Temporary opening means an opening into an enclosure that is equipped with a means of obstruction, such as a door, window, or port, that is normally closed.

Tire means any agricultural, airplane, industrial, mobile home, light-duty truck and/or passenger vehicle tire that has a bead diameter less than or equal to 0.5 meter (m) (19.7 inches) and a cross section dimension less than or equal to 0.325 m (12.8 in.), and that is mass produced in an assembly-line fashion.

Tread end cementing operation means the system used to apply cement to one or both ends of the tread or combined tread/sidewall component. A tread end cementing operation consists of a cement application station and all other equipment, such as the cement supply system and feed and takeaway conveyors, necessary to apply cement to tread ends and to allow evaporation of solvent from the cemented tread ends.

Undertread cementing operation means the system used to apply cement to a continuous strip of tread or combined tread/sidewall component. An undertread cementing operation consists of a cement application station and all other equipment, such as the cement supply system and feed and takeaway conveyors, necessary to apply cement to tread or combined tread/sidewall strips and to allow evaporation of solvent from the cemented tread or combined tread/sidewall.

VOC emission control device means equipment that destroys or recovers VOC.

VOC emission reduction system means a system composed of an enclosure, hood, or other device for containment and capture of VOC emissions and a VOC emission control device.

Water-based green tire spray means any mold release agent and lubricant applied to the inside or outside of green tires that contains 12 percent or less, by weight, of VOC as sprayed.

(b) Notations used under this subpart are defined below:

B_o=total number of beads cemented at a particular bead cementing affected facility for a month

C_a=concentration of VOC in gas stream in vents after a control device (parts per million by volume)

C_b=concentration of VOC in gas stream in vents before a control device (parts per million by volume)

C_f=concentration of VOC in each gas stream vented directly to the atmosphere from an affected facility or from a temporary enclosure around an affected facility (parts per million by volume)

D_c=density of cement or spray material (grams per liter)

D_r=density of VOC recovered by an emission control device (grams per liter)

E=emission control device efficiency, inlet versus outlet (fraction)

F_c=capture efficiency, VOC captured and routed to one control device versus total VOC used for an affected facility (fraction)

F_o=fraction of total mass of VOC used in a month by all facilities served by a common cement or spray material distribution system that is used by a particular

affected facility served by the common distribution system
G=monthly average mass of VOC used per tire cemented or sprayed with a water-based green tire spray for a particular affected facility (grams per tire)
G_b=monthly average mass of VOC used per bead cemented for a particular bead cementing affected facility (grams per bead)
L_c=volume of cement or spray material used for a month (liters)
L_r=volume of VOC recovered by an emission control device for a month (liters)
M=total mass of VOC used for a month by all facilities served by a common cement or spray material distribution system (grams)
M_o=total mass of VOC used at an affected facility for a month (grams)
M_r=mass of VOC recovered by an emission control device for a month (grams)
N=mass of VOC emitted to the atmosphere per tire cemented or sprayed with a water-based green tire spray for an affected facility for a month (grams per tire)
N_b=mass of VOC emitted per bead cemented for an affected facility for a month (grams per bead)
Q_a=volumetric flow rate in vents after a control device (dry standard cubic meters per hour)
Q_b=volumetric flow rate in vents before a control device (dry standard cubic meters per hour)
Q_f=volumetric flow rate of each stream vented directly to the atmosphere from an affected facility or from a temporary enclosure around an affected facility (dry standard cubic meters per hour)
R=overall efficiency of an emission reduction system (fraction)
T_d=total number of days in monthly compliance period (days)
T_o=total number of tires cemented or sprayed with water-based green tire sprays at a particular affected facility for a month
W_o=weight fraction of VOC in a cement or spray material.

§ 60.542 Standards for volatile organic compounds.

(a) On and after the date on which the initial performance test, required by §60.8, is completed, but no later than 180 days after initial startup, each owner or operator subject to the provisions of this subpart shall comply with the following conditions:

(1) For each undertread cementing operation:

(i) Discharge into the atmosphere no more than 25 percent of the VOC used (75 percent emission reduction) for each month; or

(ii) Maintain total (uncontrolled) VOC use less than or equal to the levels specified below, depending upon the duration of the compliance period:

(A) 3,870 kilograms of VOC per 28 days,

(B) 4,010 kilograms of VOC per 29 days,

(C) 4,150 kilograms of VOC per 30 days,

(D) 4,280 kilograms of VOC per 31 days, or

(E) 4,840 kilograms of VOC per 35 days.

(2) For each sidewall cementing operation:

(i) Discharge into the atmosphere no more than 25 percent of the VOC used (75 percent emission reduction) for each month; or

(ii) Maintain total (uncontrolled) VOC use less than or equal to the levels specified below, depending upon the duration of the compliance period:

(A) 3,220 kilograms of VOC per 28 days,

(B) 3,340 kilograms of VOC per 29 days,

(C) 3,450 kilograms of VOC per 30 days,

(D) 3,570 kilograms of VOC per 31 days, or

(E) 4,030 kilograms of VOC per 35 days.

(3) For each tread end cementing operation: Discharge into the atmosphere no more than 10 grams of VOC per tire (g/tire) cemented for each month.

(4) For each bead cementing operation: Discharge into the atmosphere no more than 5 grams of VOC per bead (g/bead) cemented for each month.

(5) For each green tire spraying operation where only water-based sprays are used:

(i) Discharge into the atmosphere no more than 1.2 grams of VOC per tire sprayed with an inside green tire spray for each month; and

(ii) Discharge into the atmosphere no more than 9.3 grams of VOC per tire sprayed with an outside green tire spray for each month.

(6) For each green tire spraying operation where only ogranic solvent-based sprays are used:

(i) Discharge into the atmosphere no more than 25 percent of the VOC used (75 percent emission reduction) for each month; or

(ii) Maintain total (uncontrolled) VOC use less than or equal to the levels specified below, depending upon the duration of the compliance period:

(A) 3,220 kilograms of VOC per 28 days,

(B) 3,340 kilograms of VOC per 29 days,

(C) 3,450 kilograms of VOC per 30 days,

(D) 3,570 kilograms of VOC per 31 days, or

(E) 4,030 kilograms of VOC per 35 days.

(7) For each green tire spraying operation where both water-based and organic solvent-based sprays are used:

(i) Discharge into the atmosphere no more than 1.2 grams of VOC per tire sprayed with a water-based inside green tire spray for each month; and

(ii) Discharge into the atmosphere no more than 9.3 grams of VOC per tire sprayed with a water-based outside green tire spray for each month; and either

(iii) Discharge into the atmosphere no more than 25 percent of the VOC used in the organic solvent-based green tire sprays (75 percent emission reduction) for each month; or

(iv) Maintain total (uncontrolled) VOC use for all organic solvent-based green tire sprays less than or equal to the levels specified under paragraph (a)(6)(ii) of this section.

(8) For each Michelin-A operation:

(i) Discharge into the atmosphere no more than 35 percent of the VOC used (65 percent emission reduction) for each month; or

(ii) Maintain total (uncontrolled) VOC use less than or equal to the levels specified below, depending upon the duration of the compliance period:

(A) 1570 Kilograms of VOC per 28 days,

(B) 1630 Kilograms of VOC per 29 days,

(C) 1690 Kilograms of VOC per 30 days,

(D) 1740 Kilograms of VOC per 31 days, or

(E) 1970 Kilograms of VOC per 35 days.

(9) For each Michelin-B operation:

(i) Discharge into the atmosphere no more than 25 percent of the VOC used (75 percent emission reduction) for each month; or

(ii) Maintain total (uncontrolled) VOC use less than or equal to the levels specified below, depending upon the duration of the compliance period:

(A) 1310 Kilograms of VOC per 28 days,

(B) 1360 Kilograms of VOC per 29 days,

(C) 1400 Kilograms of VOC per 30 days,

(D) 1450 Kilograms of VOC per 31 days, or

(E) 1640 Kilograms of VOC per 35 days.

(10) For each Michelin-C-automatic operation:

(i) Discharge into the atmosphere no more than 35 percent of the VOC used (65 percent emission reduction) for each month; or

(ii) Maintain total (uncontrolled) VOC use less than or equal to the levels specified under paragraph (a)(8)(ii) of this section.

§ 60.542a Alternate standard for volatile organic compounds.

(a) On and after the date on which the initial performance test, required by § 60.8, is completed, but no later than 180 days after September 19, 1989, each owner or operator subject to the provisions in § 60.540(b) shall not cause to be discharged into the atmosphere more than: 25 grams of VOC per tire processed for each month if the operation uses 25 grams or less of VOC per tire processed and does not employ a VOC emission reduction system.

(b) [Reserved]

[54 FR 38635, Sept. 19, 1989]

§ 60.543 Performance test and compliance provisions.

(a) Section 60.8(d) does not apply to the monthly performance test procedures required by this subpart. Section 60.8(d) does apply to initial performance tests and to the performance tests specified under paragraphs (b)(2) and (b)(3) of this section. Section 60.8(f) does not apply when Method 24 is used.

(b) Performance tests shall be conducted as follows:

(1) The owner or operator of an affected facility shall conduct an initial performance test, as required under § 60.8(a), except as described under paragraph (j) of this section. The owner or operator of an affected facility shall thereafter conduct a performance test each month, except as described under paragraphs (b)(4), (g)(1), and (j) of this section. Initial and monthly performance tests shall be conducted according to the procedures in this section.

(2) The owner or operator of an affected facility who elects to use a VOC emission reduction system with a control device that destroys VOC (e.g., incinerator), as described under paragraphs (f) and (g) of this section, shall repeat the performance test when directed by the Administrator or when the owner or operator elects to operate the capture system or control device at conditions different from the most recent determination of overall reduction efficiency. The performance test shall be conducted in accordance with the procedures described under paragraphs (f)(2) (i) through (iv) of this section.

(3) The owner or operator of an affected facility who seeks to comply with the equipment design and performance specifications, as described under paragraph (j) of this section, shall repeat the performance test when directed by the Administrator or when the owner or operator elects to operate the capture system or control device at conditions different from the most recent determination of control device efficiency or measurement of capture system retention time or face velocity. The performance test shall be conducted in accordance with the procedures described under paragraph (f)(2)(ii) of this section.

(4) The owner or operator of each tread end cementing operation and each green tire spraying operation using only water-based sprays (inside and/or outside) containing less than 1.0 percent, by weight, of VOC is not required to conduct a monthly performance test as described in paragraph (d) of this section. In lieu of conducting a monthly performance test, the owner or operator of each tread end cementing operation and each green tire spraying operation shall submit formulation data or the results of Method 24 analysis annually to verify the VOC content of each tread end cement and each green tire spray material, provided the spraying formulation has not changed during the previous 12 months. If the spray material formulation changes, formulation data or Method 24 analysis of the new spray shall be conducted to determine the VOC content of the spray and reported within 30 days as required under § 60.546(j).

(c) For each undertread cementing operation, each sidewall cementing operation, each green tire spraying operation where organic solvent-based sprays are used, each Michelin-A operation, each Michelin-B operation, and each Michelin-C-automatic operation where the owner or operator seeks to comply with the uncontrolled monthly VOC use (kg/mo) limits, the owner or operator shall use the following procedure to determine compliance with the applicable (depending upon duration of compliance period) uncontrolled monthly VOC use limit specified under § 60.542(a) (1)(ii), (2)(ii), (6)(ii), (7)(iv), (8)(ii), (9)(ii), and (10)(ii). If both undertread cementing and sidewall cementing are performed at the same affected facility during a month, then the kg/mo limit specified under § 60.542(a)(1)(ii) shall apply for that month.

(1) Determine the density and weight fraction VOC (including dilution VOC) of each cement or green tire spray from its formulation or by analysis of the cement or green tire spray using Method 24. If a dispute arises, the Administrator may require an owner or operator who used formulation data to analyze the cement or green tire spray using Method 24.

(2) Calculate the total mass of VOC used at the affected facility for the month (M_o) by the following procedure:

(i) For each affected facility for which cement or green tire spray is delivered in batch or via a distribution system that serves only the affected facility:

$$M_o = \sum_{i=1}^{a} L_{c_i} D_{c_i} W_{o_i}$$

Where:

''a'' equals the number of different cements or green tire sprays used during the month that are delivered in batch or via a distribution system that serves only a single affected facility.

(ii) For each affected facility for which cement or green tire spray is delivered via a common distribution system that also serves other affected or existing facilities:

(A) Calculate the total mass of VOC used for all of the facilities served by the common distribution system for the month (M):

$$M = \sum_{i=1}^{b} L_{c_i} D_{c_i} W_{o_i}$$

Where:

''b'' equals the number of different cements or green tire sprays used during the month that are delivered via a common distribution system that also serves other affected or existing facilities.

(B) Determine the fraction (F_o) of M used at the affected facility by comparing the production records and process specifications for the material cemented or sprayed at the affected facility for the month to the production records and process specifications for the material cemented or sprayed at all other facilities served by the common distribution system for the month or by another procedure acceptable to the Administrator.

(C) Calculate the total monthly mass of VOC used at the affected facility for the month (M_o):

$$M_o = MF_o$$

(3) Determine the time duration of the monthly compliance period (T_d).

(d) For each tread end cementing operation and each green tire spraying operation where water-based cements or sprays containing 1.0 percent, by weight, of VOC or more are used (inside and/or outside) that do not use a VOC emission reduction system, the owner or operator shall use the following procedure to determine compliance with the g/tire limit specified under § 60.542 (a)(3), (a)(5)(i), (a)(5)(ii), (a)(7)(i), and (a)(7)(ii).

(1) Determine the density and weight fraction VOC as specified under paragraph (c)(1) of this section.

(2) Calculate the total mass of VOC used at the affected facility for the month (M_o) as specified under paragraph (c)(2) of this section.

(3) Determine the total number of tires cemented or sprayed at the affected facility for the month (T_o) by the following procedure:

(i) For a trend end cementing operation, T_o equals the number of tread or combined tread/sidewall components that receive an application of tread end cement for the month.

(ii) For a green tire spraying operation that uses water-based inside green tire sprays, T_o equals the number of green tires that receive an application of water-based inside green tire spray for the month.

(iii) For a green tire spraying operation that uses water-based outside green tire sprays, T_o equals the number of green tires that receive an application of water-based outside green tire spray for the month.

(4) Calculate the mass of VOC used per tire cemented or sprayed at the affected facility for the month (G):

$$G = \frac{M_o}{T_o}$$

(5) Calculate the mass of VOC emitted per tire cemented or sprayed at the affected facility for the month (N):

$$N = G$$

(e) For each bead cementing operation that does not use a VOC emission reduction system, the owner or operator shall use the following procedure to determine compliance with the g/bead limit specified under § 60.542(a)(4).

(1) Determine the density and weight fraction VOC as specified under paragraph (c)(1) of this section.

(2) Calculate the total mass of VOC used at the affected facility for the month (M_o) as specified under paragraph (c)(2) of this section.

(3) Determine the number of beads cemented at the affected facility during the month (B_o) using production records; B_o equals the number of beads that receive an application of cement for the month.

(4) Calculate the mass of VOC used per bead cemented at the affected facility for the month (G_b):

$$G_b = \frac{M_o}{B_o}$$

(5) Calculate the mass of VOC emitted per bead cemented at the affected facility for the month (N_b):

$$N_b = G_b$$

(f) For each tread end cementing operation and each bead cementing operation that use a VOC emission reduction system with a control device that destroys VOC (e.g., incinerator), the owner or operator shall use the following procedure to determine compliance with the emission limit specified under § 60.542(a) (3) and (4).

(1) Calculate the mass of VOC used per tire cemented at the affected facility for the month (G), as specified under paragraphs (d) (1) through (4) of this section, or mass of VOC used per bead cemented at the affected facility for the month (G_b), as specified under paragraphs (e) (1) through (4) of this section.

(2) Calculate the mass of VOC emitted per tire cemented at the affected facility for the month (N) or mass of VOC emitted per bead cemented for the affected facility for the month (N_b):

$$N = G\ (1\text{-}R)$$

$$N_b = G_b\ (1\text{-}R)$$

For the initial performance test, the overall reduction efficiency (R) shall be determined as prescribed under paragraphs (f)(2) (i) through (iv) of this section. After the initial performance test, the owner or operator may use the most recently determined overall reduction efficiency (R) for the performance test. No monthly performance tests are required. The performance test shall be repeated during conditions described under paragraph (b)(2) of this section.

(i) The owner or operator of an affected facility shall construct a temporary enclosure around the application and drying areas during the performance test for the purpose of capturing fugitive VOC emissions. The enclosure must be maintained at a negative pressure to ensure that all evaporated VOC are measurable. Determine the fraction (F_c) of total VOC used at the affected facility that enters the control device:

$$F_c = \frac{\sum_{i=1}^{m} C_{b_i} Q_{b_i}}{\sum_{i=1}^{m} C_{b_i} Q_{b_i} + \sum_{i=1}^{n} C_{f_i} Q_{f_i}}$$

Where:

''m'' is the number of vents from the affected facility to the control device, and ''n'' is the number of vents from the affected facility to the atmosphere and from the temporary enclosure.

(ii) Determine the destruction efficiency of the control device (E) by using values of the volumetric flow rate of each of the gas streams and the VOC content (as carbon) of each of the gas streams in and out of the control device:

$$E = \frac{\sum_{i=1}^{m} C_{b_i} Q_{b_i} - \sum_{i=1}^{p} C_{a_i} Q_{a_i}}{\sum_{i=1}^{m} C_{b_i} Q_{b_i}}$$

Where:

''m'' is the number of vents from the affected facility to the control device, and ''p'' is the number of vents after the control device.

(iii) Determine the overall reduction efficiency (R):

$$R = EF_c$$

(iv) The owner or operator of an affected facility shall have the option of substituting the following procedure as an acceptable alternative to the requirements prescribed under paragraph (f)(2)(i) of this section. This alternative procedure is acceptable only in cases where a single VOC is used and is present in the capture system. The average capture efficiency value derived from a minimum of three runs shall constitute a test.

(A) For each run, ''i,'' measure the mass of the material containing a single VOC used. This measurement shall be made using a scale that has both a calibration and a readability to within 1 percent of the mass used during the run. This measurement may be made by filling the direct supply reservoir (e.g., trough, tray, or drum that is integral to the operation) and related application equipment (e.g., rollers, pumps, hoses) to a marked level at the

start of the run and then refilling to the same mark from a more easily weighed container (e.g., separate supply drum) at the end of the run. The change in mass of the supply drum would equal the mass of material used from the direct supply reservoir. Alternatively, this measurement may be made by weighing the direct supply reservoir at the start and end of the run or by weighing the direct supply reservoir and related application equipment at the start and end of the run. The change in mass would equal the mass of the material used in the run. If only the direct supply reservoir is weighed, the amount of material in or on the related application equipment must be the same at the start and end of the run. All additions of VOC containing material made to the direct supply reservoir during a run must be properly accounted for in determining the mass of material used during that run.

(B) For each run, ''i,'' measure the mass of the material containing a single VOC which is present in the direct supply reservoir and related application equipment at the start of the run, unless the ending weight fraction VOC in the material is greater than or equal to 98.5 percent of the starting weight fraction VOC in the material, in which case, this measurement is not required. This measurement may be made directly by emptying the direct supply reservoir and related application equipment and then filling them to a marked level from an easily weighed container (e.g. separate supply drum). The change in mass of the supply drum would equal the mass of material in the filled direct supply reservoir and related application equipment. Alternatively, this measurement may be made by weighing the direct supply reservoir and related application equipment at the start of the run and subtracting the mass of the empty direct supply reservoir and related application equipment (tare weight).

(C) For each run, ''i,'' the starting weight fraction VOC in the material shall be determined by Method 24 analysis of a sample taken from the direct supply reservoir at the beginning of the run.

(D) For each run, ''i,'' the ending weight fraction VOC in the material shall be determined by Method 24 analysis of a sample taken from the direct supply reservoir at the end of the run.

(E) For each run, ''i,'' in which the ending weight fraction VOC in the material is greater than or equal to 98.5 percent of the starting weight fraction VOC in the material, calculate the mass of the single VOC used (Mi) by multiplying the mass of the material used in the run by the starting weight fraction VOC of the material used in the run.

(F) For each run, ''i,'' in which the ending weight fraction VOC in the material is less than 98.5 percent of the starting weight fraction VOC in the material, calculate the mass of the single VOC used (M_i) as follows:

(*1*) Calculate the mass of VOC present in the direct supply reservoir and related application equipment at the start of the run by multiplying the mass of material in the direct supply reservoir and related application equipment at the start of the run by the starting weight fraction VOC in the material for that run.

(*2*) Calculate the mass of VOC present in the direct supply reservoir and related application equipment at the end of the run by multiplying the mass of material in the direct supply reservoir and related application equipment at the end of the run by the ending weight fraction VOC in the material for that run. The mass of material in the direct supply reservoir and related application equipment at the end of the run shall be calculated by subtracting the mass of material used in the run from the mass of material in the direct supply reservoir and related application equipment at the start of the run.

(*3*) The mass of the single VOC used (M_i) equals the mass of VOC present in the direct supply reservoir and related application equipment at the start of the run minus the mass of VOC present in the direct supply reservoir and related application eqiupment at the end of the run.

(G) If Method 25A is used to determine the concentration of the single VOC in the capture system, then calculate the capture efficiency (FC_i) for each run, ''i,'' as follows:

$$FC_i = \frac{C_i \quad \frac{W}{V} \quad Q_i}{(M_i)\ (10^6)}$$

Where:

C_i = Average concentration of the single VOC in the capture system during run ''i'' (parts per million by volume) corrected for background VOC (see § 60.547(a)(5)).

W = Molecular weight of the single VOC, expressed as mg per mg-mole.

V = 2.405×10^{-5} m^3/mg-mole. This is the volume occupied by one mg-mole of ideal gas at standard conditions (20 °C, 1 atmosphere) on a wet basis.

Q_i = Volumetric flow in m^3 in the capture system during run ''i'' adjusted to standard conditions (20 °C, 1 atmosphere) on a wet basis (see § 60.547(a)(5)).

10^6 = ppm per unity.

M_i = Mass in mg of the single VOC used during run ''i.''.

(H) If Method 25 is used to determine the concentration of the single VOC in the capture system, then calculate the capture efficiency (FC_i) for each run, ''i,'' as follows:

$$FC_i = \frac{\frac{C_i}{(NC)(10^6)} \quad \frac{(W)(Q_i)}{(V)}}{M_i}$$

Where: C_i = Average concentration of the single VOC in the capture system during run ''i'' (parts per million, as carbon, by volume) corrected for background VOC (see § 60.547(a)(5)).

W = Molecular weight of the single VOC, expressed as mg per mg-mole.

V = 2.405×10^{-5} m^3/mg-mole. This is the volume occupied by one mg-mole of ideal gas at standard conditions (20 °C, 1 atmosphere) on a wet basis.

Q_i = Volumetric flow in m^3 in the capture system during run ''i'' adjusted to standard conditions (20 °C, 1 atmosphere) on a dry basis (see § 60.547(a)(5)).

10^6 = ppm per unity.

M_i = Mass in mg of the single VOC used during run ''i''.

NC = Number of carbon atoms in one molecule of the single VOC.

(I) Calculate the average capture efficiency value, F_c as follows:

$$F_C = \frac{\sum_{i=1}^{n} FC_i}{n}$$

Where:

''n'' equals the number of runs made in the test ($n \geq 3$). In cases where an alternative procedure in this paragraph is used, the requirements in paragraphs (f)(2) (ii) and (iii) of this section remain unchanged.

(g) For each undertread cementing operation, each sidewall cementing operation, each green tire spraying operation where organic solvent-based sprays are used, each Michelin-A operation, each Michelin-B operation, and each Michelin-C-automatic operation that use a VOC emission reduction system with a control device that destroys VOC (e.g., incinerator), the owner or operator shall use the following procedure to determine compliance with the percent emission reduction requirement specified under § 60.542 (a) (1)(i), (2)(i), (6)(i), (7)(iii), (8)(i), (9)(i), and (10)(i).

(1) For the initial performance test, the overall reduction efficiency (R) shall be determined as prescribed under paragraphs (f)(2) (i) through (iii) of this section. The performance test shall be repeated during conditions described under paragraph (b)(2) of this section. No monthly performance tests are required.

(h) For each tread end cementing operation and each bead cementing operation that uses a VOC emission reduction system with a control device that recovers VOC (e.g., carbon adsorber),

the owner or operator shall use the following procedure to determine compliance with the emission limit specified under § 60.542(a) (3) and (4).

(1) Calculate the mass of VOC used per tire cemented at the affected facility for the month (G), as specified under paragraphs (d) (1) through (4) of this section, or mass of VOC used per bead cemented at the affected facility for the month (G_b), as specified under paragraphs (e) (1) through (4) of this section.

(2) Calculate the total mass of VOC recovered from the affected facility for the month (M_r):

$$M_r = L_r D_r$$

(3) Calculate the overall reduction efficiency for the VOC emission reduction system (R) for the month:

$$R = \frac{M_r}{M_o}$$

(4) Calculate the mass of VOC emitted per tire cemented at the affected facility for the month (N) or mass of VOC emitted per bead cemeted at the affected facility for the month (N_b):

$$N = G (1-R)$$

$$N_b = G_b (1-R)$$

(i) For each undertread cementing operation, each sidewall cemeting operation, each green tire spraying operation where organic solvent-based sprays are used, each Michelin-A operation, each Michelin-B operation, and each Michelin-C-automatic operation that use a VOC emission reduction system with a control device that recovers (VOC) (e.g., carbon adsorber), the owner or operator shall use the following procedure to determine compliance with the percent reduction requirement specified under § 60.542(a) (1)(i), (2)(i), (6)(i), (7)(iii), (8)(i), (9)(i), and (10)(i).

(1) Determine the density and weight fraction VOC as specified under paragraph (c)(1) of this section.

(2) Calculate the total mass of VOC used at the affected facility for the month (M_o) as described under paragraph (c)(2) of this section.

(3) Calculate the total mass of VOC recovered from the affected facility for the month (M_r) as described under paragraph (h)(2) of this section.

(4) Calculate the overall reduction efficiency for the VOC emission reduction system (R) for the month as described under paragraph (h)(3) of this section.

(j) Rather than seeking to demonstrate compliance with the provisions of § 60.542(a) (1)(i), (2)(i), (6)(i), (7)(iii), or (9)(i) using the performance test procedures described under paragraphs (g) and (i) of this section, an owner or operator of an undertread cementing operation, sidewall cementing operation, green tire spraying operation where organic solvent-based sprays are used, or Michelin-B operation that use a VOC emission reduction system may seek to demonstrate compliance by meeting the equipment design and performance specifications listed under paragraphs (j)(1), (2), and (4) through (6) or under paragraphs (j)(1) and (3) through (6) of this section, and by conducting a control device efficiency performance test to determine compliance as described under paragraph (j)(7) of this section. The owner or operator shall conduct this performance test of the control device efficiency no later than 180 days after initial startup of the affected facility, as specified under § 60.8(a). Meeting the capture system design and performance specifications, in conjunction with operating a 95 percent efficient control device, is an acceptable means of demonstrating compliance with the standard. Therefore, the requirement for the initial performance test on the enclosure, as specified under § 60.8(a), is waived. No monthly performance tests are required.

(1) For each undertread cementing operation, each sidewall cementing operation, and each Michelin-B operation, the cement application and drying area shall be contained in an enclosure that meets the criteria specified under paragraphs (j) (2), (4), and (5) of this section; for each green tire spraying operation where organic solvent-based sprays are used, the spray application and drying area shall be contained in an enclosure that meets the criteria specified under paragraphs (j) (3), (4), and (5) of this section.

(2) The drying area shall be enclosed between the application area and the water bath or to the extent necessary to contain all tire components for at least 30 seconds after cement application, whichever distance is less.

(3) Sprayed green tires shall remain in the enclosure for a minimum of 30 seconds after spray application.

(4) A minimum face velocity of 100 feet per minute shall be maintained continuously through each permanent opening into the enclosure when all temporary enclosure openings are closed. The cross-sectional area of each permanent opening shall be divided into at least 12 equal areas, and a velocity measurement shall be performed at the centroid of each equal area with an anemometer or similar velocity monitoring device; the face velocity of each permanent opening is the average value of the velocity measurements taken. The monitoring device shall be calibrated and operated according to the manufacturer's instructions.

Temporary enclosure openings shall remain closed at all times except when worker access is necessary.

(5) The total area of all permanent openings into the enclosure shall not exceed the area that would be necessary to maintain the VOC concentration of the exhaust gas stream at 25 percent of the lower explosive limit (LEL) under the following conditions:

(i) The facility is operating at the maximum solvent use rate;

(ii) The face velocity through each permanent opening is 100 feet per minute; and

(iii) All temporary openings are closed.

(6) All captured VOC are ducted to a VOC emission control device that is operated on a continuous basis and that achieves at least a 95 percent destruction or recovery efficiency.

(7) The efficiency of the control device (E) for the initial performance test is determined by using values of the volumetric flow rate of each of the gas streams and the VOC content (as carbon) of each of the gas streams in and out of the control device as described under paragraph (f)(2)(ii) of this section. The control device efficiency shall be redetermined during conditions specified under paragraph (b)(3) of this section.

(k) Each owner or operator of an affected facility who initially elected to be subject to the applicable percent emission reduction requirement specified under §60.542(a)(1)(i), (2)(i), (6)(i), (7)(iii), (8)(i), (9)(i), or (10)(i) and who later seeks to comply with the applicable total (uncontrolled) monthly VOC use limit specified under §60.542(a)(1)(ii), (2)(ii), (6)(ii), (7)(iv), (8)(ii), (9)(ii), or (10)(ii) shall demonstrate, using the procedures described under paragraph (c) of this section, that the total VOC use at the affected facility has not exceeded the applicable total (uncontrolled) monthly VOC use limit during each of the last 6 months of operation. The owner or operator shall be subject to the applicable percent emission reduction requirement until the conditions of this paragraph and §60.546(h) are satisfied.

(l) In determining compliance for each undertread cementing operation, each sidewall cementing operation, each green tire spraying operation, each Michelin-A operation, each Michelin-B operation, and each Michelin-C-automatic operation, the owner or operator shall include all the VOC used, recovered, or destroyed from cements and organic solvent-based green tire sprays including those cements or sprays used for tires other than those defined under §60.541(a).

(m) In determining compliance for each tread end cementing operation, each bead cementing operation, and each green tire spraying operation, the owner or operator shall include only those tires defined under §60.541(a) when determining T_o and B_o.

(n) For each undertread cementing operation and each sidewall cementing operation that does not use a VOC emission reduction system, the owner or operator shall use the following procedure to determine compliance with the 25 g/tire limit specified in §60.542a:

(1) Calculate the total mass of VOC (M_o) used at the affected facility for the month by the following procedure.

(i) For each affected facility for which cement is delivered in batch or via a distribution system which serves only that affected facility:

$$M_o = \sum_{i=1}^{n} L_{ci} D_{ci} W_{oi}$$

Where: ''n'' equals the number of different cements or sprays used during the month.

(ii) For each affected facility for which cement is delivered via a common distribution system which also serves other affected or existing facilities.

(A) Calculate the total mass (M) of VOC used for all of the facilities served by the common distribution system for the month:

$$M = \sum_{i=1}^{n} L_{ci} D_{ci} W_{oi}$$

Where: ''n'' equals the number of different cements or sprays used during the month.

(B) Determine the fraction (F_o) of ''M'' used by the affected facility by comparing the production records and process specifications for the material cemented at the affected facility for the month to the production records and process specifications for the material cemented at all other facilities served by the common distribution system for the month or by another procedure acceptable to the Administrator.

(C) Calculate the total monthly mass of VOC(M_o) used at the affected facility:

$$M_o = MF_o$$

(2) Determine the total number of tires (T_o) processed at the affected facility for the month by the following procedure.

(i) For undertread cementing, T_o equals the number of tread or combined tread/sidewall components which receive an application of undertread cement.

(ii) For sidewall cementing, T_o equals the number of sidewall components which receive an application of sidewall cement, divided by 2.

(3) Calculate the mass of VOC used per tire processed (G) by the affected facility for the month:

$$G = \frac{M_o}{T_o}$$

(4) Calculate the mass of VOC emitted per tire processed (N) for the affected facility for the month:

$$N = G$$

(5) Where the value of the mass of VOC emitted per tire processed (N) is less than or equal to the 25 g/tire limit specified under § 60.542a, the affected facility is in compliance.

[52 FR 34874, Sept. 15, 1987; 52 FR 37874, Oct. 9, 1987, as amended at 54 FR 38635, Sept. 19, 1989]

§ 60.544 Monitoring of operations.

(a) Each owner or operator subject to the provisions of this subpart shall install, calibrate, maintain, and operate according to manufacturer's specifications the following equipment, unless alternative monitoring procedures or requirements are approved for that facility by the Administrator:

(1) Where a thermal incinerator is used for VOC emission reduction, a temperature monitoring device equipped with a continuous recorder for the temperature of the gas stream in the combustion zone of the incinerator. The temperature monitoring device shall have an accuracy of 1 percent of the temperature being measured in °C or ±0.5 °C, whichever is greater.

(2) Where a catalytic incinerator is used for VOC emission reduction, temperatrue monitoring devices, each equipped with a continuous recorder, for the temperature in the gas stream immediately before and after the catalyst bed of the incinerator. The temperature monitoring devices shall have an accuracy of 1 percent of the temperature being measured in °C or ±0.5 °C, whichever is greater.

(3) For an undertread cementing operation, sidewall cementing operation, green tire spraying operation where organic solvent-based sprays are used, or Michelin-B operation where a carbon adsorber is used to meet the performance requirements specified under § 60.543(j)(6), an organics monitoring device used to indicate the concentration level of organic compounds based on a detection principle such as infrared,

photoionization, or thermal conductivity, equipped with a continous recorder, for the outlet of the carbon bed.

(b) An owner or operator of an undertread cementing operation, sidewall cementing operation, green tire spraying operation where organic solvent-based sprays are used, or Michelin-B operation where a VOC recovery device other than a carbon adsorber is used to meet the performance requirements specified under §60.543(j)(6), shall provide to the Administrator information describing the operation of the control device and the process parameter(s) which would indicate proper operation and maintenance of the device. The Administrator may request further information and will specify appropriate monitoring procedures or requirements.

§ 60.545 Recordkeeping requirements.

(a) Each owner or operator of an affected facility that uses a thermal incinerator shall maintain continuous records of the temperature of the gas stream in the combustion zone of the incinerator and records of all 3–hour periods of operation for which the average temperature of the gas stream in the combustion zone was more than 28 °C (50 °F) below the combustion zone temperature measured during the most recent determination of the destruction efficiency of the thermal incinerator that demonstrated that the affected facility was in compliance.

(b) Each owner or operator of an affected facility that uses a catalytic incinerator shall maintain continuous records of the temperature of the gas stream both upstream and downstream of the catalyst bed of the incinerator, records of all 3-hour periods of operation for which the average temperature measured before the catalyst bed is more than 28 °C below the gas stream temperature measured before the catalyst bed during the most recent determination of destruction efficiency of the catalytic incinerator that demonstrated that the affected facility was in compliance, and records of all 3-hour periods for which the average temperature difference across the catalyst bed is less than 80 percent of the temperature difference measured during the most recent determination of the destruction efficiency of the catalytic incinerator that demonstrated that the affected facility was in compliance.

(c) Each owner or operator of an undertread cementing operation, sidewall cementing operation, green tire spraying operation where organic solvent-based sprays are used, or Michelin-B operation that uses a carbon adsorber to meet the requirements specified under §60.543(j)(6) shall maintain continuous records of all 3-hour periods of operation during which the average VOC concentration level or reading of organics in the exhaust gases is more than 20 percent greater than the exhaust gas concentration level or reading measured by the organics monitoring device during the most recent determination of the recovery efficiency of the carbon adsorber that demonstrated that the affected facility was in compliance.

(d) Each owner or operator of an undertread cementing operation, sidewall cementing operation, green tires spraying operation where organic solvent-based sprays are used, Michelin-A operation, Michelin-B operation, or Michelin-C-automatic operation who seeks to comply with a specified kg/mo uncontrolled VOC use limit shall maintain records of monthly VOC use and the number of days in each compliance period.

(e) Each owner or operator that is required to conduct monthly performance tests, as specified under §60.543(b)(1), shall maintain records of the results of all monthly tests.

(f) Each owner or operator of a tread end cementing operation and green tire spraying operation using water-based cements or sprays containing less than 1.0 percent by weight of VOC, as specified under §60.543(B)(4), shall maintain records of formulation data or the results of Method 24 analysis conducted to verify the VOC content of the spray.

[52 FR 34874, Sept. 15, 1987, as amended at 54 FR 38637, Sept. 19, 1989]

§ 60.546 Reporting requirements.

(a) Each owner or operator subject to the provisions of this subpart, at the time of notification of the anticipated initial startup of an affected facility pursuant to §60.7(a)(2), shall provide a

written report to the Administrator declaring for each undertread cementing operation, each sidewall cementing operation, each green tires spraying operation where organic solvent-based spray are used, each Michelin-A operation, each Michelin-B operation, and each Michelin-C automatic operation the emission limit he intends to comply with and the compliance method (where § 60.543(j) is applicable) to be employed.

(b) Each owner or operator subject to the provisions of this subpart, at the time of notification of the anticipated initial startup of an affected facility pursuant to § 60.7(a)(2), shall specify the monthly schedule (each calendar month or a 4-4-5-week schedule) to be used in making compliance determinations.

(c) Each owner or operator subject to the provisions of this subpart shall report the results of all initial performance tests, as required under § 60.8(a), and the results of the performance tests required under § 60.543 (b)(2) and (b)(3). The following data shall be included in the report for each of the above performance tests:

(1) For each affected facility for which the owner or operator seeks to comply with a kg/mo uncontrolled VOC use limit specified under § 60.542(a): The monthly mass of VOC used (M_o) and the number days in the compliance period (T_d).

(2) For each affected facility that seeks to comply with a g/tire or g/bead limit specified under § 60.542(a) without the use of a VOC emission reduction system: the mass of VOC used (M_o), the number of tires cemented or sprayed (T_o), the mass of VOC emitted per tire cemented or sprayed (N), the number of beads cemeted (B_o), and the mass of VOC emitted per bead cemented (N_b).

(3) For each affected facility that uses a VOC emission reduction system with a control device that destroys VOC (e.g., incinerator) to comply with a g/tire or g/bead limit specified under § 60.542(a): The mass of VOC used (M_o), the number of tires cemented or sprayed (T_o), the mass of VOC emitted per tire cemented or sprayed (N), the number of beads cemented (B_o), the mass of VOC emitted per bead cemented (N_b), the mass of VOC used per tire cemented or sprayed (G), the mass of VOC per bead cemented (G_b), the emission control device efficiency (E), the capture system efficiency (F_c), the face velocity through each permanent opening for the capture system with the temporary openings closed, and the overall system emission reduction (R).

(4) For each affected facility that uses a VOC emission reduction system with a control device that destroys VOC (e.g., incinerator) to comply with a percent emission reduction requirement specified under § 60.542(a): The emission control device efficiency (E), the capture system efficiency (F_c), the face velocity through each permanent opening in the capture system with the temporary openings closed, and the overall system emission reduction (R).

(5) For each affected facility that uses a carbon adsorber to comply with a g/tire or g/bead limit specified under § 60.542(a): The mass of VOC used (M_o), the number of tires cemented or sprayed (T_o), the mass of VOC used per tire cemented or sprayed (G), the number of beads cemented (B_o), the mass of VOC used per bead (G_b), the mass of VOC recovered (M_r), the overall system emission reduction (R), the mass of VOC emitted per tire cemented or sprayed (N), and the mass of VOC emitted per bead cemented (N_b).

(6) For each affected facility that uses a VOC emission reduction system with a control device that recovers VOC (e.g., carbon adsorber) to comply with a percent emission reduction requirement specified under § 60.542(a): The mass of VOC used (M_o), the mass of VOC recovered (M_r), and the overall system emission reduction (R).

(7) For each affected facility that elects to comply with the alternate limit specified under § 60.542a: The mass of VOC used (M_o), the number of tires processed (T_o), and the mass of VOC emitted per tire processed (N).

(d) Each owner or operator of an undertread cementing operation, sidewall cementing operation, green tire spraying operation where organic solvent-based sprays are used, or Michelin-B operation who seeks to comply with the requirements described under § 60.543(j) shall include in the initial compliance report a statement specifying, in detail, how each of

the equipment design and performance specifications has been met. The initial compliance report also shall include the following data: The emission control device efficiency (E), the face velocity through each permanent enclosure opening with all temporary enclosure openings closed, the total area of all permanent enclosure openings, the total area of all temporary enclosure openings, the maximum solvent use rate (kg/hr), the type(s) of VOC used, the lower explosive limit (LEL) for each VOC used, and the length of time each component is enclosed after application of cement or spray material.

(e) Each owner or operator of an affected facility shall include the following data measured by the required monitoring device(s), as applicable, in the report for each performance test specified under paragraph (c) of this section.

(1) The average combustion temperature measured at least every 15 minutes and averaged over the performance test period of incinerator destruction efficiency for each thermal incinerator.

(2) The average temperature before and after the catalyst bed measured at least every 15 minutes and averaged over the performance test period of incinerator destruction efficiency for each catalytic incinerator.

(3) The concentration level or reading indicated by the organics monitoring device at the outlet of the adsorber, measured at least every 15 minutes and averaged over the performance test period of carbon adsorber recovery efficiency while the vent stream is normally routed and constituted.

(4) The appropriate data to be specified by the Administrator where a VOC recovery device other than a carbon adsorber is used.

(f) Once every 6 months each owner or operator subject to the provisions of §60.545 shall report, as applicable:

(1) Each monthly average VOC emission rate that exceeds the g/tire or g/bead limit specified under §60.542(a), as applicable for the affected facility.

(2) Each monthly average VOC use rate that exceeds the kg/mo VOC use limit specified under §60.542(a), as applicable for the affected facility.

(3) Each monthly average VOC emission reduction efficiency for a VOC recovery device (e.g., carbon adsorber) less than the percent efficiency limit specified under §60.542(a), as applicable for the affected facility.

(4) Each 3-hour period of operation for which the average temperature of the gas stream in the combustion zone of a thermal incinerator, as measured by the temperature monitoring device, is more than 28°C (50°F) below the combustion zone temperature measured during the most recent determination of the destruction efficiency of the thermal incinerator that demonstrated that the affected facility was in compliance.

(5) Each 3-hour period of operation for which the average temperature of the gas stream immediately before the catalyst bed of a catalytic incinerator, as measured by the temperature monitoring device, is more than 28°C (50°F) below the gas stream temperature measured before the catalyst bed during the most recent determination of the destruction efficiency of the catalyst incinerator that demonstrated that the affected facility was in compliance, and any 3-hour period for which the average temperature difference across the catalyst bed (i.e., the difference between the temperatures of the gas stream immediately before and after the catalyst bed), as measured by the temperature monitoring device, is less than 80 percent of the temperature difference measured during the most recent determination of the destruction efficiency of the catalytic incinerator that demonstrated that the affected facility was in compliance.

(6) Each 3-hour period of operation during which the average concentration level or reading of VOC's in the exhaust gases from a carbon adsorber is more than 20 percent greater than the exhaust gas concentration level or reading measured by the organics monitoring device during the most recent determination of the recovery efficiency of the carbon adsorber that demonstrated that the affected facility was in compliance.

(g) The requirements for semiannual reports remain in force until and unless EPA, in delegating enforcement

authority to a State under Section 111(c) of the Act, approves reporting requirements or an alternative means of compliance surveillance adopted by such State. In that event, affected facilities within the State will be relieved of the obligation to comply with these requirements, provided that they comply with the requirements established by the State.

(h) Each owner or operator of an affected facility who initially elected to be subject to the applicable percent emission reduction requirement specified under § 60.542(a) and who later seeks to comply with the applicable total (uncontrolled) monthly VOC use limit specified under § 60.542(a) and who has satisfied the provisions specified under § 60.543(k) shall furnish the Administrator written notification no less than 30 days in advance of the date when he intends to be subject to the applicable VOC use limit instead of the applicable percent emission reduction requirement.

(i) The owner or operator of each undertread cementing operation and each sidewall cementing operation who qualifies for the alternate provisions as described in § 60.542a, shall furnish the Administrator written notification of the election no less than 60 days after September 19, 1989.

(j) The owner or operator of each tread end cementing operation and each green tire spraying (inside and/or outside) operation using water-based sprays containing less than 1.0 percent, by weight, of VOC as described in § 60.543(b)(1) shall furnish the Administrator, within 60 days initially and annually thereafter, formulation data or Method 24 results to verify the VOC content of the water-based sprays in use. If the spray formulation changes before the end of the 12-month period, formulation data or Method 24 results to verify the VOC content of the spray shall be reported within 30 days.

[52 FR 34874, Sept. 15, 1987; 52 FR 37874, Oct. 9, 1987, as amended at 54 FR 38637, Sept. 19, 1989]

§ 60.547 Test methods and procedures.

(a) The test methods in appendix A to this part, except as provided under § 60.8(b), shall be used to determine compliance with § 60.542(a) as follows:

(1) Method 24 or formulation data for the determination of the VOC content of cements or green tire spray materials. In the event of dispute, Method 24 shall be the reference method. For Method 24, the cement or green tire spray sample shall be a 1-liter sample collected in a 1-liter container at a point where the sample will be representative of the material as applied in the affected facility.

(2) Method 25 as the reference method for the determination of the VOC concentrations in each stack, both entering and leaving an emission control device. The owner or operator shall notify the Administrator 30 days in advance of any test by Method 25. For Method 25, the sampling time for each of three runs shall be at least 1 hour. Method 1 shall be used to select the sampling site, and the sampling point shall be the centroid of the duct or at a point no closer to the walls than 1 meter. The minimum sample volume shall be 0.003 dry standard cubic meter (dscm) except that shorter sampling times or smaller volumes, when necessitated by process variables or other factors, may be approved by the Administrator.

(3) Method 2, 2A, 2C, or 2D, as appropriate, as the reference method for determination of the flow rate of the stack gas. The measurement site shall be the same as for the Method 25 sampling. A velocity traverse shall be made once per run within the hour that the Method 25 sample is taken.

(4) Method 4 for determination of stack gas moisture.

(5) Method 25 or Method 25A for determination of the VOC concentration in a capture system prior to a control device when only a single VOC is present (see § 60.543 (f)(2)(iv)(G) and (f)(2)(iv)(H)). The owner or operator shall notify the Administrator 30 days in advance of any test by either Method 25 or Method 25A. Method 1 shall be used to select the sampling site and the sampling point shall be the centroid of the duct or at a point no closer to the walls than 1 meter. Method 2, 2A, 2C, or 2D, as appropriate, shall be used as the test method for the concurrent determination of gas flow rate in the capture system.

(i) For Method 25, the sampling time for each run shall be at least 1 hour. For each run, a concurrent sample shall be taken immediately upwind of the application area to determine the background VOC concentration of air drawn into the capture system. Subtract this reading from the reading obtained in the capture system for that run. The minimum sample volume shall be 0.003 dry standard cubic meter (dscm) except that shorter sampling times or smaller volumes, when necessitated by process variable or other factors, may be approved by the Administrator. Use Method 3 to determine the moisture content of the stack gas.

(ii) For Method 25A, the sampling time for each run shall be at least 1 hour. Instrument calibration shall be performed by the procedure given in Method 25A using the single VOC present in the capture system. A different calibration gas may be used if the results are corrected using an experimentally determined response factor comparing the alternative calibration gas to the single VOC used in the process. After the instrument has been calibrated, determine the background VOC concentration of the air drawn into the capture system immediately upwind of the application area for each run. The instrument does not need to be recalibrated for the background measurement. Subtract this reading from the reading obtained in the capture system for that run. The Method 25A results shall only be used in the alternative procedure for determination of capture efficiency described under §60.543(f)(2)(iv)(G).

[52 FR 34874, Sept. 15, 1987, as amended at 54 FR 38638, Sept. 19, 1989]

§60.548 Delegation of authority.

(a) In delegating implementation and enforcement authority to a State under section 111(c) of the Act, the authorities contained in paragraph (b) of this section shall be retained by the Administrator and not transferred to a State.

(b) Authority which will not be delegated to States: §60.543(c)(2)(ii)(B).

Subpart CCC [Reserved]

Subpart DDD—Standards of Performance for Volatile Organic Compound (VOC) Emissions from the Polymer Manufacturing Industry

SOURCE: 55 FR 51035, Dec. 11, 1990, unless otherwise noted.

§60.560 Applicability and designation of affected facilities.

(a) *Affected facilities.* The provisions of this subpart apply to affected facilities involved in the manufacture of polypropylene, polyethylene, polystyrene, or poly (ethylene terephthalate) as defined in §60.561 of this subpart. The affected facilities designated below for polypropylene and polyethylene are inclusive of all equipment used in the manufacture of these polymers, beginning with raw materials preparation and ending with product storage, and cover all emissions emanating from such equipment.

(1) For process emissions from any polypropylene and polyethylene manufacturing process that uses a continuous process, the affected facilities are each of the following process sections: each raw materials preparation section, each polymerization reaction section, each material recovery section, each product finishing section, and each product storage section. These process sections are affected facilities for process emissions that are emitted continuously and for process emissions that are emitted intermittently.

(2) For process emissions from polystyrene manufacturing processes that use a continuous process, the affected facilities are each material recovery section. These process sections are affected facilities for only those process emissions that are emitted continuously.

(3) For process emissions from poly(ethylene terephthalate) manufacturing processes that use a continuous process, the affected facilities are each polymerization reaction section. If the process uses dimethyl terephthalate, then each material recovery section is also an affected facility. If the process uses terephthalic acid, then each raw

materials preparation section is also an affected facility. These process sections are affected facilities for only those process emissions that are emitted continuously.

(4) For VOC emissions from equipment leaks from polypropylene, polyethylene, and polystyrene (including expandable polystyrene) manufacturing processes, the affected facilities are each group of fugitive emissions equipment (as defined in § 60.561) within any process unit (as defined in § 60.561). This subpart does not apply to VOC emissions from equipment leaks from poly(ethylene terephthalate) manufacturing processes.

(i) Affected facilities with a design capacity to produce less than 1,000 Mg/yr shall be exempt from § 60.562–2.

(ii) Addition or replacement of equipment for the purposes of improvement which is accomplished without a capital expenditure shall not by itself be considered a modification under § 60.562–2.

(b) *Applicability dates.* The applicability date identifies when an affected facility becomes subject to a standard. Usually, a standard has a single applicability date. However, some polypropylene and polyethylene affected facilities have a September 30, 1987, applicability date and others have a January 10, 1989, applicability date. The following paragraphs identify the applicability dates for all affected facilities subject to this subpart.

(1) *Polypropylene and polyethylene.* Each process section in a polypropylene or polyethylene production process is a potential affected facility for both continuous and intermittent emissions. The applicability date depends on when the process section was constructed, modified, or reconstructed and, in some instances, on the type of production process.

(i) The applicability date for any polypropylene or polyethylene affected facility that is constructed, modified, or reconstructed after January 10, 1989, regardless of the type of production process being used, is January 10, 1989.

(ii) Only some polypropylene or polyethylene process sections that are constructed, modified, or reconstructed on or before January 10, 1989, but after September 30, 1987, are affected facilities. These process sections (and the type of emissions to be controlled) are identified by an ''x'' in Table 1. The applicability date for the process sections (and the emissions to be controlled) that are identified by an ''x'' in Table 1 is September 30, 1987. Since the affected facilities that have a September 30, 1987, applicability date are determined by the type of production process (e.g., liquid phase, gas phase), each owner or operator shall identify the particular production process that applies to his or her particular process.

TABLE 1—POLYPROPYLENE AND POLYETHYLENE AFFECTED FACILITIES WITH SEPTEMBER 30, 1987, APPLICABILITY DATE

Polymer	Production process	Process section	Emissions	
			Continuous	Intermittent
Polypropylene	Liquid phase	Raw Materials Preparation	X	—
		Material Recovery	X	—
		Polymerization Reaction	X	X
		Product Finishing	X	—
		Product Storage	—	—
Polypropylene	Gas Phase	Raw Materials Preparation	—	—
		Polymerization Reaction	—	X
		Material Recovery	X	—
		Product Finishing	—	—
		Product Storage	—	—
Low Density Polyethylene	High Pressure	Raw Materials Preparation	—	X
		Polymerization Reaction	—	X
		Material Recovery	—	X
		Product Finishing	—	X
		Product Storage	—	X
Low Density Polyethylene	Low Pressure	Raw Materials Preparation	X	X
		Polymerization Reaction	—	X
		Material Recovery	—	—
High Density Polyethylene	Gas Phase	Product Finishing	X	—
		Product Storage	—	—

TABLE 1—POLYPROPYLENE AND POLYETHYLENE AFFECTED FACILITIES WITH SEPTEMBER 30, 1987, APPLICABILITY DATE—Continued

Polymer	Production process	Process section	Emissions	
			Continuous	Intermittent
High Density Polyethylene	Liquid Phase Slurry	Raw Materials Preparation	—	X
		Polymerization Reaction	—	—
		Material Recovery	X	—
		Product Finishing	X	—
		Product Storage	—	—
High Density Polyethylene	Liquid Phase Solution	Raw Materials Preparation	X	X
		Polymerization Reaction	—	X
		Material Recovery	X	X
		Product Finishing	—	—
		Product Storage	—	—

NOTE: "X" denotes that that process section is an affected facility for continuous or intermittent emissions or both, as shown, which has a September 30, 1987, applicability date.

"—" denotes that that process section is not considered an affected facility for continous or intermittent emissions or both, as shown, if the process section is constructed, modified, or reconstructed after September 30, 1987, and on or before January 10, 1989. These process sections are affected facilities if they are constructed, modified, or reconstructed after January 10, 1989.

(2) *Polystyrene.* The applicability date for each polystyrene affected facility is September 30, 1987.

(3) *Poly(ethylene terephthalate).* The applicability date for each poly(ethylene terephthalate) affected facility is September 30, 1987.

(c) Any facility under paragraph (a) of this section that commences construction, modification, or reconstruction after its applicability date as identified under paragraph (b) of this section is subject to the requirements of this subpart, except as provided in paragraphs (d) through (f) of this section.

(d) Any polypropylene or polyethylene affected facility with a September 30, 1987, applicability date that commenced construction, modification, or reconstruction after September 30, 1987, and on or before January 10, 1989, with an uncontrolled emission rate (as defined in footnote a to Table 2) at or below those identified in Table 2 is not subject to the requirements of §60.562–1 unless and until its uncontrolled emission rate exceeds that rate listed for it in Table 2 or it is modified or reconstructed after January 10, 1989. At such time, such facility becomes subject to §60.562–1 and the procedures identified in §60.562–1(a) shall be used to determine the control of emissions from the facility.

TABLE 2—MAXIMUM UNCONTROLLED THRESHOLD EMISSION RATES [a]

Production process	Process section	Uncontrolled emission rate, kg TOC/Mg product
Polypropylene, liquid phase process	Raw Materials Preparation	0.15 [b]
	Polymerization Reaction	0.14 [b], 0.24 [c]
	Material Recovery	0.19 [b]
	Product Finishing	1.57 [b]
Polypropylene, gas phase process	Polymerization Reaction	0.12 [c]
	Material Recovery	0.02 [b]
Low Density Polyethylene, low pressure process	Raw Materials Preparation	0.41 [d]
	Polymerization Reaction	[e]
	Material Recovery	[e]
	Product Finishing	[e]
	Product Storage	[e]
Low Density Polyethylene, low pressure process	Raw Materials Preparation	0.05 [f]
	Polymerization Reaction	0.03 [g]
	Production Finishing	0.01 [b]
High Density Polyethylene, liquid phase slurry process	Raw Materials Preparation	0.25 [c]
	Material Recovery	0.11 [b]
	Product Finishing	0.41 [b]
High Density Polyethylene, liquid phase solution process.	Raw Materials Preparation	0.24 [f]
	Polymerization Reaction	0.16 [c]
	Material Recovery	1.68 [f]

TABLE 2—MAXIMUM UNCONTROLLED THRESHOLD EMISSION RATES [a]—Continued

Production process	Process section	Uncontrolled emission rate, kg TOC/Mg product
High Density Polyethylene, gas phase process	Raw Materials Preparation	0.05 [f]
	Polymerization Reaction	0.03 [g]
	Product Finishing	0.01 [b]
Polystyrene, continuous process	Material Recovery	0.05 [b, h]
Poly(ethylene terephthalate), dimethyl terephthalate process.	Material Recovery	0.12 [b, h]
	Polymerization Reaction	1.80 [h, i, j]
Poly(ethylene terephthalate), terephthalic acid process	Raw Materials Preparation	([l])
	Polymerization Reaction	1.80 [h, j, m]
		3.92 [h, k, m]

[a] "Uncontrolled emission rate" refers to the emission rate of a vent stream that vents directly to the atmosphere and to the emission rate of a vent stream to the atmosphere that would occur in the absence of any add-on control devices but after any material recovery devices that constitute part of the normal material recovery operations in a process line where potential emissions are recovered for recycle or resale.
[b] Emission rate applies to continuous emissions only.
[c] Emission rate applies to intermittent emissions only.
[d] Total emission rate for non-emergency intermittent emissions from raw materials preparation, polymerization reaction, material recovery, product finishing, and product storage process sections.
[e] See footnote d.
[f] Emission rate applies to both continuous and intermittent emissions.
[g] Emission rate applies to non-emergency intermittent emissions only.
[h] Applies to modified or reconstructed affected facilities only.
[i] Includes emissions from the cooling water tower.
[j] Applies to a process line producing low viscosity poly(ethylene terephthalate).
[k] Applies to a process line producing high viscosity poly(ethylene terephathlate).
[l] See footnote m.
[m] Applies to the sum of emissions to the atmosphere from the polymerization reaction section (including emissions from the cooling water tower) and the raw materials preparation section (i.e., the esterifiers).

(e)(1) Modified or reconstructed affected facilities at polystyrene and poly(ethylene terephthalate) plants with uncontrolled emission rates at or below those identified in Table 2 are exempt from the requirements of § 60.562–1 unless and until its uncontrolled emission rate exceeds that rate listed for it in Table 2. This exemption does not apply to new polystyrene or poly(ethylene terephthalate) affected facilities.

(2) Emissions from modified or reconstructed affected facilities that are controlled by an existing control device and that have uncontrolled emission rates greater than the uncontrolled threshold emission rates identified in Table 2 are exempt from the requirements of § 60.562–1 unless and until the existing control device is modified, reconstructed, or replaced.

(f) No process section of an experimental process line is considered an affected facility for continuous or intermittent process emissions.

(g) Individual vent streams that emit continuous emissions with uncontrolled annual emissions of less than 1.6 Mg/yr or with a weight percent TOC of less than 0.10 percent from a new, modified, or reconstructed polypropylene or polyethylene affected facility are exempt from the requirements of § 60.562–1(a)(1). If at a later date, an individual stream's uncontrolled annual emissions become 1.6 Mg/yr or greater (if the stream was exempted on the basis of the uncontrolled annual emissions exemption) or VOC concentration becomes 0.10 weight percent or higher (if the stream was exempted on the basis of the VOC concentration exemption), then the stream is subject to the requirements of § 60.562–1.

(h) Emergency vent streams, as defined in § 60.561, from a new, modified, or reconstructed polypropylene or polyethylene affected facility are exempt from the requirements of § 60.562–1(a)(2).

(i) An owner or operator of a polypropylene or polyethylene affected facility that commenced construction, modification, or reconstruction after September 30, 1987, and on or before January 10, 1989, and that is in a process line in which more than one type of

polyolefin (i.e., polypropylene, low density polyethylene, high density polyethylene, or their copolymers) is produced shall select one of the polymer/production process combinations in Table 1 for purposes of determining applicable affected facilities and uncontrolled threshold emissions rates.

(NOTE: The numerical emission limits in these standards are expressed in terms of total organic compounds, measured as total organic compounds less methane and ethane.)

[55 FR 51035, Dec. 11, 1990; 56 FR 12299, Mar. 22, 1991]

§ 60.561 Definitions.

As used in this subpart, all terms not defined herein shall have the meaning given them in the Act, in subpart A of part 60, or in subpart VV of part 60, and the following terms shall have the specific meanings given them.

Boiler means any enclosed combustion device that extracts useful energy in the form of steam.

Capital expenditure means, in addition to the definition in 40 CFR 60.2, an expenditure for a physical or operational change to an existing facility that exceeds P, the product of the facility's replacement cost, R, and an adjusted annual asset guideline repair allowance, A, as reflected by the following equation: $P = R \times A$, where

(a) The adjusted annual asset guideline repair allowance, A, is the product of the percent of the replacement cost, Y, and the applicable basic annual asset guideline repair allowance, B, as reflected by the following equation: $A = Y \times (B \div 100)$;

(b) The percent Y is determined from the following equation: $Y = 1.0 - 0.57 \log X$, where X is 1986 minus the year of construction; and

(c) The applicable basic annual asset guideline repair allowance, B, is equal to 12.5.

Car-sealed means, for purposes of these standards, a seal that is placed on the device used to change the position of a valve (e.g., from opened to closed) such that the position of the valve cannot be changed without breaking the seal and requiring the replacement of the old seal once broken with a new seal.

Closed vent system means a system that is not open to the atmosphere and that is composed of piping, connections, and, if necessary, flow inducing devices that transport gas or vapor from a piece or pieces of equipment to a control device.

Continuous emissions means any gas stream containing VOC that is generated essentially continuously when the process line or any piece of equipment in the process line is operating.

Continuous process means a polymerization process in which reactants are introduced in a continuous manner and products are removed either continuously or intermittently at regular intervals so that the process can be operated and polymers produced essentially continuously.

Control device means an enclosed combustion device, vapor recovery system, or flare.

Copolymer means a polymer that has two different repeat units in its chain.

Decomposition means, for the purposes of these standards, an event in a polymerization reactor that advances to the point where the polymerization reaction becomes uncontrollable, the polymer begins to break down (decompose), and it becomes necessary to relieve the reactor instantaneously in order to avoid catastrophic equipment damage or serious adverse personnel safety consequences.

Decomposition emissions refers to those emissions released from a polymer production process as the result of a decomposition or during attempts to prevent a decomposition.

Emergency vent stream means, for the purposes of these standards, an intermittent emission that results from a decomposition, attempts to prevent decompositions, power failure, equipment failure, or other unexpected cause that requires immediate venting of gases from process equipment in order to avoid safety hazards or equipment damage. This includes intermittent vents that occur from process equipment where normal operating parameters (e.g., pressure or temperature) are exceeded such that the process equipment can not be returned to normal operating conditions using the design features of the system and venting must occur to avoid equipment

failure or adverse safety personnel consequences and to minimize adverse effects of the runaway reaction. This does not include intermittent vents that are designed into the process to maintain normal operating conditions of process vessels including those vents that regulate normal process vessel pressure.

End finisher means a polymerization reaction vessel operated under very low pressures, typically at pressures of 2 torr or less, in order to produce high viscosity poly(ethylene terephthalate). An end finisher is preceded in a high viscosity poly(ethylene terephthalate) process line by one or more polymerization vessels operated under less severe vacuums, typically between 5 and 10 torr. A high viscosity poly(ethylene terephthalate) process line may have one or more end finishers.

Existing control device means, for the purposes of these standards, an air pollution control device that has been in operation on or before September 30, 1987, or that has been in operation between September 30, 1987, and January 10, 1989, on those continuous or intermittent emissions from a process section that is marked by an ''—'' in Table 1 of this subpart.

Existing control device is reconstructed means, for the purposes of these standards, the capital expenditure of at least 50 percent of the replacement cost of the existing control device.

Existing control device is replaced means, for the purposes of these standards, the replacement of an existing control device with another control device.

Expandable polystyrene means a polystyrene bead to which a blowing agent has been added using either an in-situ suspension process or a post-impregnation suspension process.

Experimental process line means a polymer or copolymer manufacturing process line with the sole purpose of operating to evaluate polymer manufacturing processes, technologies, or products. An experimental process line does not produce a polymer or resin that is sold or that is used as a raw material for nonexperimental process lines.

Flame zone means that portion of the combustion chamber in a boiler occupied by the flame envelope.

Fugitive emissions equipment means each pump, compressor, pressure relief device, sampling connection system, open-ended valve or line, valve, and flange or other connector in VOC service and any devices or systems required by subpart VV of this part.

Gas phase process means a polymerization process in which the polymerization reaction is carried out in the gas phase; i.e., the monomer(s) are gases in a fluidized bed of catalyst particles and granular polymer.

High density polyethylene (HDPE) means a thermoplastic polymer or copolymer comprised of at least 50 percent ethylene by weight and having a density of greater than 0.940 g/cm^3.

High pressure process means the conventional production process for the manufacture of low density polyethylene in which a reaction pressure of about 15,000 psig or greater is used.

High viscosity poly(ethylene terephthalate) means poly(ethylene terephthalate) that has an intrinsic viscosity of 0.9 or higher and is used in such applications as tire cord and seat belts.

Incinerator means an enclosed combustion device that is used for destroying VOC.

In-situ suspension process means a manufacturing process in which styrene, blowing agent, and other raw materials are added together within a reactor for the production of expandable polystyrene.

Intermittent emissions means those gas streams containing VOC that are generated at intervals during process line operation and includes both planned and emergency releases.

Liquid phase process means a polymerization process in which the polymerization reaction is carried out in the liquid phase; i.e., the monomer(s) and any catalyst are dissolved, or suspended in a liquid solvent.

Liquid phase slurry process means a liquid phase polymerization process in which the monomer(s) are in solution (completely dissolved) in a liquid solvent, but the polymer is in the form of solid particles suspended in the liquid

reaction mixture during the polymerization reaction; sometimes called a particle form process.

Liquid phase solution process means a liquid phase polymerization process in which both the monomer(s) and polymer are in solution (completely dissolved) in the liquid reaction mixture.

Low density polyethylene (LDPE) means a thermoplastic polymer or copolymer comprised of at least 50 percent ethylene by weight and having a density of 0.940 g/cm^3 or less.

Low pressure process means a production process for the manufacture of low density polyethylene in which a reaction pressure markedly below that used in a high pressure process is used. Reaction pressure of current low pressure processes typically go up to about 300 psig.

Low viscosity poly(ethylene terephthalate) means a poly(ethylene terephthalate) that has an intrinsic viscosity of less than 0.75 and is used in such applications as clothing, bottle, and film production.

Material recovery section means the equipment that recovers unreacted or by-product materials from any process section for return to the process line, off-site purification or treatment, or sale. Equipment designed to separate unreacted or by-product material from the polymer product are to be included in this process section, provided at least some of the material is recovered for reuse in the process, off-site purification or treatment, or sale, at the time the process section becomes an affected facility. Otherwise such equipment are to be assigned to one of the other process sections, as appropriate. Equipment that treats recovered materials are to be included in this process section, but equipment that also treats raw materials are not to be included in this process section. The latter equipment are to be included in the raw materials preparation section. If equipment is used to return unreacted or by-product material directly to the same piece of process equipment from which it was emitted, then that equipment is considered part of the process section that contains the process equipment. If equipment is used to recover unreacted or by-product material from a process section and return it to another process section or a different piece of process equipment in the same process section or sends it off-site for purification, treatment, or sale, then such equipment are considered part of a material recovery section. Equipment used for the on-site recovery of ethylene glycol from poly(ethylene terephthalate) plants, however, are not included in the material recovery section, but are covered under the standards applicable to the polymerization reaction section (§ 60.562–1(c)(1)(ii)(A) or (2)(ii)(A)).

Operating day means, for the purposes of these standards, any calendar day during which equipment used in the manufacture of polymer was operating for at least 8 hours or one labor shift, whichever is shorter. Only operating days shall be used in determining compliance with the standards specified in § 60.562–1(c)(1)(ii)(B), (1)(ii)(C), (2)(ii)(B), and (2)(ii)(C). Any calendar day in which equipment is used for less than 8 hours or one labor shift, whichever is less, is not an ''operating day'' and shall not be used as part of the rolling 14-day period for determining compliance with the standards specified in § 60.562–1(c)(1)(ii)(B), (1)(ii)(C), (2)(ii)(B), and (2)(ii)(C).

Polyethylene means a thermoplastic polymer or copolymer comprised of at least 50 percent ethylene by weight; see low density polyethylene and high density polyethylene.

Poly(ethylene terephthalate) (PET) means a polymer or copolymer comprised of at least 50 percent bis-(2-hydroxyethyl)-terephthalate (BHET) by weight.

Poly(ethylene terephthalate) (PET) manufacture using dimethyl terephthalate means the manufacturing of poly(ethylene terephthalate) based on the esterification of dimethyl terephthalate (DMT) with ethylene glycol to form the intermediate monomer bis-(2-hydroxyethyl)-terephthalate (BHET) that is subsequently polymerized to form PET.

Poly(ethylene terephthalate) (PET) manufacture using terephthalic acid means the manufacturing of poly(ethylene terephthalate) based on the esterification reaction of terephthalic acid (TPA) with ethylene glycol to form the intermediate monomer bis-(2-hydroxyethyl)-

terephthalate (BHET) that is subsequently polymerized to form PET.

Polymerization reaction section means the equipment designed to cause monomer(s) to react to form polymers, including equipment designed primarily to cause the formation of short polymer chains (oligomers or low polymers), but not including equipment designed to prepare raw materials for polymerization, e.g., esterification vessels. For the purposes of these standards, the polymerization reaction section begins with the equipment used to transfer the materials from the raw materials preparation section and ends with the last vessel in which polymerization occurs. Equipment used for the on-site recovery of ethylene glycol from poly(ethylene terephthalate) plants, however, are included in this process section, rather than in the material recovery process section.

Polypropylene (PP) means a thermoplastic polymer or copolymer comprised of at least 50 percent propylene by weight.

Polystyrene (PS) means a thermoplastic polymer or copolymer comprised of at least 80 percent styrene or para-methylstyrene by weight.

Post-impregnation suspension process means a manufacturing process in which polystyrene beads are first formed in a suspension process, washed, dried, or otherwise finished and then added with a blowing agent to another reactor in which the beads and blowing agent are reacted to produce expandable polystyrene.

Process heater means a device that transfers heat liberated by burning fuel to fluids contained in tubular coils, including all fluids except water that is heated to produce steam.

Process line means a group of equipment assembled that can operate independently if supplied with sufficient raw materials to produce polypropylene, polyethylene, polystyrene, (general purpose, crystal, or expandable) or poly(ethylene terephthalate) or one of their copolymers. A process line consists of the equipment in the following process sections (to the extent that these process sections are present at a plant): raw materials preparation, polymerization reaction, product finishing, product storage, and material recovery.

Process section means the equipment designed to accomplish a general but well-defined task in polymer production. Process sections include raw materials preparation, polymerization reaction, material recovery, product finishing, and product storage and may be dedicated to a single process line or common to more than one process line.

Process unit means equipment assembled to perform any of the physical and chemical operations in the production of polypropylene, polyethylene, polystyrene, (general purpose, crystal, or expandable), or poly(ethylene terephthalate) or one of their copolymers. A process unit can operate independently if supplied with sufficient feed or raw materials and sufficient storage facilities for the product. Examples of process units are raw materials handling and monomer recovery.

Product finishing section means the equipment that treats, shapes, or modifies the polymer or resin to produce the finished end product of the particular facility, including equipment that prepares the product for product finishing. For the purposes of these standards, the product finishing section begins with the equipment used to transfer the polymerized product from the polymerization reaction section and ends with the last piece of equipment that modifies the characteristics of the polymer. Product finishing equipment may accomplish product separation, extruding and pelletizing, cooling and drying, blending, additives introduction, curing, or annealing. Equipment used to separate unreacted or by-product material from the product are to be included in this process section, provided the material separated from the polymer product is not recovered at the time the process section becomes an affected facility. If the material is being recovered, then the separation equipment are to be included in the material recovery section. Product finishing does not include polymerization, the physical mixing of the pellets to obtain a homogenous mixture of the polymer (except as noted below), or the shaping (such as fiber spinning, molding, or fabricating) or modification (such as fiber stretching and crimping)

of the finished end product. If physical mixing occurs in equipment located between product finishing equipment (i.e., before all the chemical and physical characteristics have been ''set'' by virtue of having passed through the last piece of equipment in the product finishing section), then such equipment are to be included in this process section. Equipment used to physically mix the finished product that are located after the last piece of equipment in the product finishing section are part of the product storage section.

Product storage section means the equipment that is designed to store the finished polymer or resin end product of the particular facility. For the purposes of these standards, the product storage section begins with the equipment used to transfer the finished product out of the product finishing section and ends with the containers used to store the final product. Any equipment used after the product finishing section to recover unreacted or by-product material are to be considered part of a material recovery section. Product storage does not include any intentional modification of the characteristics of any polymer or resin product, but does include equipment that provide a uniform mixture of product, provided such equipment are used after the last product finishing piece of equipment. This process section also does not include the shipment of a finished polymer or resin product to another facility for further finishing or fabrication.

Raw materials preparation section means the equipment located at a polymer manufacturing plant designed to prepare raw materials, such as monomers and solvents, for polymerization. For the purposes of these standards, this process section begins with the equipment used to transfer raw materials from storage and recovered material from material recovery process sections, and ends with the last piece of equipment that prepares the material for polymerization. The raw materials preparation section may include equipment that accomplishes purification, drying, or other treatment of raw materials or of raw and recovered materials together, activation of catalysts, and esterification including the formation of some short polymer chains (oligomers), but does not include equipment that is designed primarily to accomplish the formation of oligomers, the treatment of recovered materials alone, or the storage of raw materials.

Recovery system means an individual unit or series of material recovery units, such as absorbers, condensers, and carbon adsorbers, used for recovering volatile organic compounds.

Total organic compounds (TOC) means those compounds measured according to the procedures specified in § 60.564.

Vent stream means any gas stream released to the atmosphere directly from an emission source or indirectly either through another piece of process equipment or a material recovery device that constitutes part of the normal recovery operations in a polymer process line where potential emissions are recovered for recycle or resale, and any gas stream directed to an air pollution control device. The emissions released from an air pollution control device are not considered a vent stream unless, as noted above, the control device is part of the normal material recovery operations in a polymer process line where potential emissions are recovered for recycle or resale.

Volatile organic compounds (VOC) means, for the purposes of these standards, any reactive organic compounds as defined in § 60.2 Definitions.

[55 FR 51035, Dec. 11, 1990; 56 FR 9178, Mar. 5, 1991; 56 FR 12299, Mar. 22, 1991]

§ 60.562–1 Standards: Process emissions.

(a) Polypropylene, low density polyethylene, and high density polyethylene. Each owner or operator of a polypropylene, low density polyethylene, or high density polyethylene process line containing a process section subject to the provisions of this subpart shall comply with the provisions in this section on and after the date on which the initial performance test required by § 60.8 is completed, but not later than 60 days after achieving the maximum production rate at which the affected facility will be operated, or 180 days after initial startup whichever comes first.

(1) *Continuous emissions.* For each vent stream that emits continuous emissions from an affected facility as defined in § 60.560(a)(1), the owner or operator shall use the procedures identified in paragraphs (a)(1) (ii) and (iii) of this section for determining which continuous emissions are to be controlled and which level of control listed in paragraph (a)(1)(i) of this section is to be met. The owner or operator shall use the procedures identified in paragraphs (a)(1) (ii) and (iii) of this section each time a process section is constructed, modified, or reconstructed at the plant site.

(i) *Level of control* Continuous emission streams determined to be subject to control pursuant to the procedures identified in paragraphs (a)(1) (ii) and (iii) of this section, as applicable, shall meet one of the control levels identified in paragraphs (a)(1)(i) (A) through (D) of this section. The procedures in paragraphs (a)(1) (ii) and (iii) of this section identify which level of control may be met. The level of control identified in paragraph (a)(1)(i)(D) of this section is limited to certain continuous emission streams, which are identified through the procedures in paragraphs (a)(1) (ii) and (iii) of this section.

(A) Reduce emissions of total organic compounds (minus methane and ethane) (TOC) by 98 weight percent, or to a concentration of 20 parts per million by volume (ppmv) on a dry basis, whichever is less stringent. The TOC is expressed as the sum of the actual compounds, not carbon equivalents. If an owner or operator elects to comply with the 20 ppmv standard, the concentration shall include a correction to 3 percent oxygen only when supplemental combustion air is used to combust the vent stream.

(B) Combust the emissions in a boiler or process heater with a design heat input capacity of 150 million Btu/hour or greater by introducing the vent stream into the flame zone of the boiler or process heater. (Note: A boiler or process heater of lesser design heat capacity may be used, but must demonstrate compliance with paragraph (a)(1)(i)(A) of this section.)

(C) Combust the emissions in a flare that meets the conditions specified in § 60.18. If the flare is used to control both continuous and intermittent emissions, the flare shall meet the conditions specified in § 60.18 at all times (i.e., which controlling continuous emissions alone or when controlling both continuous and intermittent emissions).

(D) Vent the emissions to a control device located on the plant site.

(ii) *Uncontrolled Continuous Emissions.* For each vent stream that emits continuous emissions from an affected facility as defined in § 60.560(a)(1) and that is not controlled in an existing control device, the owner or operator shall use the procedures identified in Table 3 to identify those continuous emissions from each constructed, modified, or reconstructed affected facility that are to be controlled. The owner shall include in the procedure all uncontrolled continuous vent streams from previously constructed, modified, or reconstructed affected facilities at the plant site each time a process section is constructed, modified, or reconstructed at the plant site. In applying the procedures shown in Table 3, the stream characteristics may be either measured or calculated as specified in § 60.564(d). For modified or reconstructed affected facilities, these stream characteristics are to be determined after a modification or reconstruction determination has been made by the Administrator, but before any actual changes have been undertaken, and then again after the actual changes have been made. Figure 1 provides a summary overview of the control determination procedure described in Table 3.

TABLE 3—PROCEDURE FOR DETERMINING CONTROL AND APPLICABLE STANDARD FOR CONTINUOUS EMISSION STREAMS FROM NEW, MODIFIED, OR RECONSTRUCTED POLYPROPYLENE AND POLYETHYLENE AFFECTED FACILITIES

Procedure /a/	Applicable TOC weight percent range	Control/no control criteria	Applicable standard
1. Sum all uncontrolled streams with TOC weight percent within the applicable weight percent range from all affected facilities at a plant site.	0.10 < 5.5	1. If total combined uncontrolled emissions are equal to or greater than the calculated threshold emissions (CTE) /b/, control.	1. § 60.562–1(a)(1)(i) (A), (B), or (C).
2. Calculate total uncontrolled annual emissions for each weight percent range. For modified or affected facilities, use the total uncontrolled emissions after modification or reconstruction.		2. If total combined uncontrolled emission are less than the CTE /b/, control only individual streams with volume flow rates of 8 scfm or less.	2. § 60.562–1(a)(1)(i) (A) through (D).
3. Calculate composite TOC concentration (weight percent) for streams in the 0.10 to less than 5.5 weight percent range and for streams in the 5.5 to less than 20 weight percent range. For modified or reconstructed affected facilities, calculate the composite VOC concentration before and after modification and reconstruction.	5.5 < 20	1. If total combined uncontrolled emissions are equal to or greater than CTE /b/, control.	1. § 60.562–1(a)(1)(i) (A), (B), or (C) 2. If total combined uncontrolled emissions are less than the CTE / b/, control only individual streams with volume flow rates of 8 scfm or less.
4. Select the higher of the two TOC concentrations for each weight percent range for vent streams from a modified or reconstructed affected facility.	20 to 100	1. If total combined uncontrolled emissions are equal to or greater than 18.2 Mg/yr, control.	1. § 60.562–1(a)(1)(i) (A), (B), or (C).
5. Calculate the threshold emissions for the 0.10 to less than 5.5 weight percent range and for the 5.5 to less than 20 weight percent range using the respective composite TOC concentration selected above.		2. If total combined uncontrolled emissions are less than 18.2 Mg/yr, control.	2. § 60.562–1(a)(1)(i) (A) through (D).

a Individual streams excluded under § 60.560(g) from the requirements of § 60.562–1 are to be excluded from all calculations in this table. This paragraph exempts all individual emission streams with individual uncontrolled annual emission rates of less than 1.6 Mg/yr and all individual emission streams with individual TOC concentrations of less than 0.10 percent TOC by weight.

b For the 0.10 to less than 5.5 weight percent range, the following equations are used:

If the percent composite TOC concentration is	Use this equation to calculate threshold emissions
0.10<0.12	$(a \times 7.5 \times 10^6)+226$
0.12<0.2	$(b \times 58.3)+116.8$
0.2<0.3	$(c \times 3020)+71.8$
0.3<0.4	$(d \times 547)+54.5$
0.4<0.6	48.3+31 (0.6 − weight percent TOC)
0.6<5.5	48.3

where: $a=(0.12-\text{weight percent TOC})^{2,5}$

$$b=\frac{\left\{\frac{0.18}{\text{weight percent TOC}}\right\}^{0.5}-1}{\text{weight percent TOC}}$$

$c=(0.3-\text{weight percent TOC})^{2}$

$d=(0.4-\text{weight percent TOC})^{1,5}$.

For the 5.5 to less than 20 weight percent range, the following equations are used.

If the percent composite TOC concentration is	Use this equation to calculate threshold emissions
5.5<7.0	$(e \times 740)+31$
7.0<9.0	$(f \times 324)+25.0$
9.0<20	$(g \times 125)+18.2$

where

$$e = \frac{\left\{\frac{7.0}{\text{weight percent TOC}}\right\}^{0.5} - 1}{\text{weight percent TOC}}$$

$$f = \frac{\left\{\frac{9.0}{\text{weight percent TOC}}\right\}^{0.5} - 1}{\text{weight percent TOC}}$$

$$g = \frac{\left\{\frac{20.0}{\text{weight percent TOC}}\right\}^{0.5} - 1}{\text{weight percent TOC}}$$

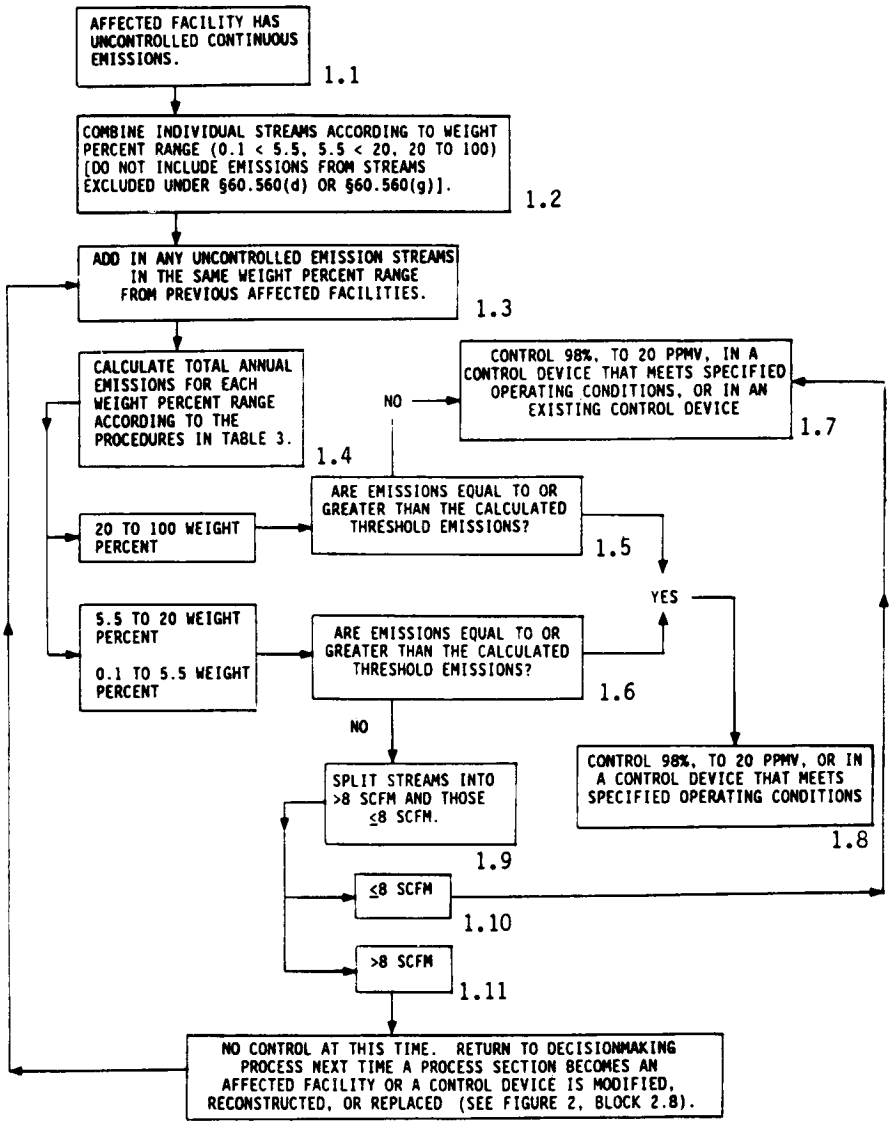

Figure 1. Decisionmaking Process for Uncontrolled Continuous Emissions from Polypropylene and Polyethylene Affected Facilities

(iii) Controlled Continuous Emissions. For each vent stream that emits continuous emissions from an affected facility as defined in §60.560(a)(1) and that is controlled in an existing control device, each owner or operator shall determine whether the emissions entering the control device are greater

than or equal to the calculated threshold emissions (CTE) level, which is to be calculated using the TOC concentration of the inlet vent stream and the equations in footnote b of Table 3. If the inlet stream's TOC concentration is equal to or greater than 20 weight percent, the calculated threshold emissions level is 18.2 Mg/yr. If multiple emission streams are vented to the control device, the individual streams are not to be separated into individual weight percent ranges for calculation purposes as would be done for uncontrolled emission streams. Emissions vented to an existing control device are required to be controlled as described in paragraphs (a)(1)(iii) (A) and (B) of this section. Figure 2 illustrates the control determination procedure for controlled continuous emissions.

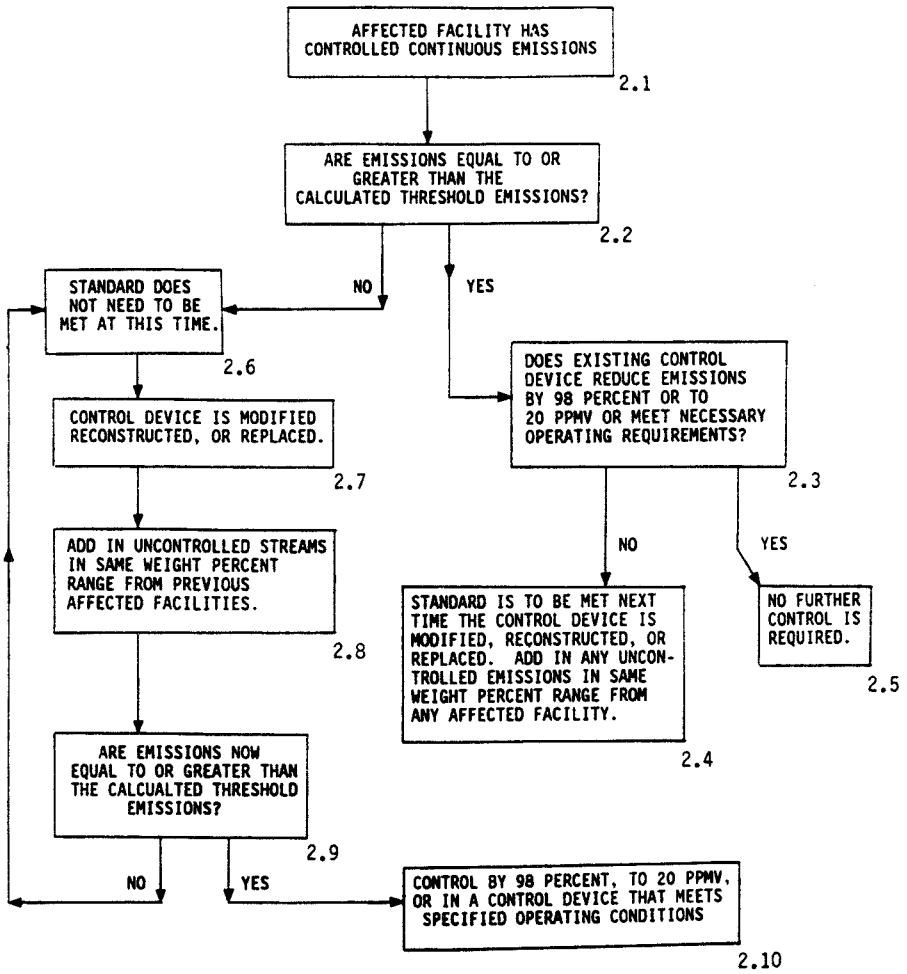

NOTE: There are no individual stream exemptions for emissions already controlled by existing control devices.

Figure 2. Decisionmaking Process for Continuous Emissions Already Controlled at Polypropylene and Polyethylene Affected Facilities

(A) If the annual emissions of the stream entering the control device are equal to or greater than the CTE levels, then compliance with one of the requirements identified in § 60.562–1(a)(1)(i) (A), (B), or (C) is required at such time the control device is reconstructed or replaced or has its operating conditions modified as a result of State or local regulations (including changes in the operating permit) including those instances where the control device is reconstructed, replaced, or modified in its operation at the same time the existing process section

is modified or reconstructed and becomes an affected facility. If the existing control device already complies with one of the requirements identified in § 60.562–1(a)(1)(i) (A), (B), or (C), no further control is required.

(B) If the annual emissions of the stream entering the control device are less than the CTE level, then the requirements of § 60.562–1(a)(1)(i) (A), (B), or (C) are not applicable at that time. However, if the control device is replaced, reconstructed, or modified at a later date, each owner or operator shall reevaluate the applicability of these standards. This is done by combining with the vent stream entering the control device any uncontrolled vent streams in the same weight percent range as the controlled vent stream and determining whether the annual emissions of the stream entering the control device plus the applicable uncontrolled vent streams are greater than or equal to the CTE level, which is based on the weighted TOC concentration of the controlled vent stream and the uncontrolled vent streams. If the annual emissions entering the control device (including the applicable uncontrolled vent streams) are greater than or equal to the CTE level, then compliance with one of the requirements identified in § 60.562–1(a)(1)(i) (A), (B), or (C) is required at that time for both the controlled and uncontrolled vent streams. If the annual emissions are less than the CTE level, compliance with these standards is again not required at such time. However, if the control device is again replaced, reconstructed, or modified, each owner or operator shall repeat this determination procedure.

(2) *Intermittent emissions.* The owner or operator shall control each vent stream that emits intermittent emissions from an affected facility as defined in § 60.560–1(a)(1) by meeting one of the control requirements specified in paragraphs (a)(2) (i) and (ii) of this section. If a vent stream that emits intermittent emissions is controlled in an existing flare, incinerator, boiler, or process heater, the requirements of this paragraph are waived until such time the control device is reconstructed or replaced or is modified in its operating conditions as a result of State or local regulation, including changes in the operating permit. This paragraph does not apply to emergency vent streams exempted by § 60.560(h) and as defined in § 60.561.

(i) Combust the emissions in a flare that is:

(A) Designed for and operated with no visible emissions, except for periods not to exceed a total of 5 minutes during any 2 consecutive hours,

(B) Operated with a flame present at all times, and

(C) Designed to maintain a stable flame.

(ii) Combust the emissions in an incinerator, boiler, or process heater. Such emissions shall be introduced into the flame zone of a boiler or process heater.

(b) *Polystyrene.* Each owner or operator of a polystyrene process line containing process sections subject to the provisions of this subpart shall comply with the provisions in this section on and after the date on which the initial performance test required by § 60.8 is completed, but not later than 60 days after achieving the maximum production rate at which the affected facility will be operated, or 180 days after initial startup, whichever comes first. Each owner or operator of a polystyrene process line using a continuous process shall:

(1) Limit the continuous TOC emissions from the material recovery section by complying with one of the following:

(i) Not allow continuous TOC emissions to be greater than 0.0036 kg TOC/Mg product; or

(ii) Not allow the outlet gas stream temperature from each final condenser in the material recovery section to exceed −25 °C (−13 °F). For purposes of this standard, temperature excursions above this limit shall not be considered a violation when such excursions occur during periods of startup, shutdown, or malfunction; or

(iii) Comply with § 60.562–1(a)(1)(i) (A), (B), or (C).

(2) If continuous TOC emissions from the material recovery section are routed through an existing emergency vapor recovery system, then compliance with these standards is required when the emergency vapor recovery

system undergoes modification, reconstruction, or replacement. In such instances, compliance with these standards shall be achieved no later than 180 days after completion of the modification, reconstruction, or replacement.

(c) *Poly(ethylene terephthalate).* Each owner or operator of a poly(ethylene terephthalate) process line containing process sections subject to the provisions of this subpart shall comply with the provisions in this section on and after the date on which the initial performance test required by §60.8 is completed, but not later than 60 days after achieving the maximum production rate at which the affected facility will be operated, or 180 days after initial startup, whichever comes first.

(1) Each owner or operator of a PET process line using a dimethyl terephthalate process shall:

(i) Limit the continuous TOC emissions from the material recovery section (i.e., methanol recovery) by complying with one of the following:

(A) Not allow the continuous TOC emissions to be greater than 0.018 kg TOC/Mg product; or

(B) Not allow the outlet gas stream temperature from each final condenser in the material recovery section (i.e., methanol recovery) to exceed +3°C (+37°F). For purposes of this standard, temperature excursions above this limit shall not be considered a violation when such excursions occur during periods of startup, shutdown, or malfunction.

(ii) Limit the continuous TOC emissions and, if steam-jet ejectors are used to provide vacuum to the polymerization reactors, the ethylene glycol concentration from the polymerization reaction section by complying with the appropriate standard set forth below. The ethylene glycol concentration limits specified in paragraphs (c)(1)(ii) (B) and (C) of this section shall be determined by the procedures specified in §60.564(j).

(A) Not allow continuous TOC emissions from the polymerization reaction section (including emissions from any equipment used to further recover the ethylene glycol, but excluding those emissions from the cooling tower) to be greater than 0.02 kg TOC/Mg product; and

(B) If steam-jet ejectors are used as vacuum producers and a low viscosity product is being produced using single or multiple end finishers or a high viscosity product is being produced using a single end finisher, maintain the concentration of ethylene glycol in the liquid effluent exiting the vacuum system servicing the polymerization reaction section at or below 0.35 percent by weight, averaged on a daily basis over a rolling 14-day period of operating days; or

(C) If steam-jet ejectors are used as vacuum producers and a high viscosity product is being produced using multiple end finishers, maintain an ethylene glycol concentration in the cooling tower at or below 6.0 percent by weight averaged on a daily basis over a rolling 14-day period of operating days.

(2) Each owner or operator of a PET process line using a terephthalic acid process shall:

(i) Not allow the continuous TOC emissions from the esterification vessels in the raw materials preparation section to be greater than 0.04 kg TOC/Mg product.

(ii) Limit the continuous TOC emissions and, if steam-jet ejectors are used to provide vaccum to the polymerization reactors, the ethylene glycol concentration from the polymerization reaction section by complying with the appropriate standard set forth below. The ethylene glycol concentration limits specified in paragraphs (c)(2)(ii) (B) and (C) of this section shall be determined by the procedures specified in §60.564(j).

(A) Not allow continuous TOC emissions from the polymerization reaction section (including emissions from any equipment used to further recover the ethylene glycol, but excluding those emissions from the cooling tower) to be greater than 0.02 kg TOC/Mg product; and

(B) If steam-jet ejectors are used as vacuum producers and a low viscosity product is being produced using single or multiple end finishers or a high viscosity product is being produced using a single end finisher, maintain the concentration of ethylene glycol in the liquid effluent exiting the vacuum system servicing the polymerization reaction section at or below 0.35 percent by

weight, averaged on a daily basis over a rolling 14-day period of operating days; or

(C) If steam-jet ejectors are used as vacuum producers and a high viscosity product is being produced using multiple end finishers, maintain an ethylene glycol concentration in the cooling tower at or below 6.0 percent by weight averaged on a daily basis over a rolling 14-day period of operating days.

(d) Closed vent systems and control devices used to comply with this subpart shall be operated at all times when emissions may be vented to them.

(e) Vent systems that contain valves that could divert a vent stream from a control device shall have car-sealed opened all valves in the vent system from the emission source to the control device and car-sealed closed all valves in vent system that would lead the vent stream to the atmosphere, either directly or indirectly, bypassing the control device.

[55 FR 51035, Dec. 11, 1990; 56 FR 9178, Mar. 5, 1991, as amended at 56 FR 12299, Mar. 22, 1991]

§ 60.562–2 Standards: Equipment leaks of VOC.

(a) Each owner or operator of an affected facility subject to the provisions of this subpart shall comply with the requirements specified in § 60.482–1 through § 60.482–10 as soon as practicable, but no later than 180 days after initial startup, except that indications of liquids dripping from bleed ports in existing pumps in light liquid service are not considered to be a leak as defined in § 60.482–2(b)(2). For purposes of this standard, a ''bleed port'' is a technologically-required feature of the pump whereby polymer fluid used to provide lubrication and/or cooling of the pump shaft exits the pump, thereby resulting in a visible leak of fluid. This exemption expires when the existing pump is replaced or reconstructed.

(b) An owner or operator may elect to comply with the requirements specified in § 60.483–1 and § 60.483–2.

(c) An owner or operator may apply to the Administrator for a determination of equivalency for any means of emission limitation that achieves a reduction in emissions of VOC at least equivalent to the reduction in emissions of VOC achieved by the controls required in this subpart. In doing so, the owner or operator shall comply with requirements specified in § 60.484.

(d) Each owner or operator subject to the provisions of this subpart shall comply with the provisions specified in § 60.485 except an owner or operator may use the following provision in addition to § 60.485(e): Equipment is in light liquid service if the percent evaporated is greater than 10 percent at 150 °C as determined by ASTM Method D86–78 (incorporated by reference as specified in § 60.17).

(e) Each owner or operator subject to the provisions of this subpart shall comply with § 60.486 and § 60.487.

[55 FR 51035, Dec. 11, 1990; 56 FR 12299, Mar. 22, 1991]

§ 60.563 Monitoring requirements.

(a) Whenever a particular item of monitoring equipment is specified in this section to be installed, the owner or operator shall install, calibrate, maintain, and operate according to manufacturer's specifications that item as follows:

(1) A temperature monitoring device to measure and record continuously the operating temperature to within 1 percent (relative to degrees Celsius) or ± 0.5 °C (± 0.9 °F), whichever is greater.

(2) A flame monitoring device, such as a thermocouple, an ultraviolet sensor, an infrared beam sensor, or similar device to indicate and record continuously whether a flare or pilot light flame is present, as specified.

(3) A flow monitoring indicator to indicate and record whether or not flow exists at least once every fifteen minutes.

(4) An organic monitoring device (based on a detection principle such as infrared, photoionization, or thermal conductivity) to indicate and record continuously the concentration level of organic compounds.

(5) A specific gravity monitoring device to measure and record continuously to within 0.02 specific gravity unit.

(b) The owner or operator shall install, as applicable, the monitoring equipment for the control means used to comply with § 60.562–1, except § 60.562–1(a)(1)(i)(D), as follows:

(1) If the control equipment is an incinerator:

(i) For a noncatalytic incinerator, a temperature monitoring device shall be installed in the firebox.

(ii) For a catalytic incinerator, temperature monitoring devices shall be installed in the gas stream immediately before and after the catalytic bed.

(2) If a flare is used:

(i) A flame monitoring device shall be installed to indicate the presence of a flare flame or a flame for each pilot light, if the flare is used to comply with §60.562–1(a)(1), including those flares controlling both continuous and intermittent emissions.

(ii) A thermocouple or equivalent monitoring device to indicate the presence of a flame at each pilot light, if used to comply with §60.562–1(a)(2).

(3) If a boiler or process heater is used:

(i) If the boiler or process heater has a heat input design capacity of less than 150 million Btu/hr, a temperature monitoring device shall be installed between the radiant section and the convection zone for watertube boilers and between the furnace (combustion zone) and the firetubes for firetube boilers.

(ii) If the boiler or process heater has a heat input design capacity of 150 million Btu/hr or greater, such records to indicate the periods of operation of the boiler or process heater shall be maintained. The records must be readily available for inspection.

(4) If an absorber is the final unit in a system:

(i) A temperature monitoring device and a specific gravity monitoring device for the scrubber liquid shall be installed, or

(ii) An organic monitoring device shall be installed at the outlet of the absorber.

(5) If a condenser is the final unit in a system:

(i) A temperature monitoring device shall be installed at the condenser exit (product side), or

(ii) An organic monitoring device shall be installed at the outlet of the condenser.

(6) If a carbon adsorber is the final unit in a system, an organic monitoring device shall be installed at the outlet of the carbon bed.

(c) Owners or operators of control devices used to comply with the provisions of this subpart, except §60.562–1(a)(1)(i)(D), shall monitor these control devices to ensure that they are operated and maintained in conformance with their designs.

(d) Owners or operators using a vent system that contains valves that could divert a vent stream from a control device used to comply with the provisions of this subpart shall do one or a combination of the following:

(1) Install a flow indicator immediately downstream of each valve that if opened would allow a vent stream to bypass the control device and be emitted, either directly or indirectly, to the atmosphere. The flow indicator shall be capable of recording flow at least once every fifteen minutes.

(2) Monitor the valves once a month, checking the position of the valves and the condition of the car seal, and identify all times when the car seals have been broken and the valve position has been changed (i.e., from opened to closed for valves in the vent piping to the control device and from closed to open for valves that allow the stream to be vented directly or indirectly to the atmosphere).

(e) An owner or operator complying with the standards specified under §60.562–1, except §60.562–1(a)(1)(i)(D), with control devices other than an incinerator, boiler, process heater, flare, absorber, condenser, or carbon adsorber or by any other means shall provide to the Administrator information describing the operation of the control device and the process parameter(s) which would indicate proper operation and maintenance of the device. The Administrator may request further information and will specify appropriate monitoring procedures or requirements.

[55 FR 51035, Dec. 11, 1990; 56 FR 12299, Mar. 22, 1991]

§60.564 Test methods and procedures.

(a) In conducting the performance tests required in §60.8, the owner or operator shall use as reference methods and procedures the test methods in appendix A of this part or other methods

and procedures specified in this section, except as provided under § 60.8(b). Owners or operators complying with § 60.562–1(a)(1)(i)(D) need not perform a performance test on the control device, provided the control device is not used to comply with any other requirement of § 60.562–1(a).

(1) Whenever changes are made in production capacity, feedstock type or catalyst type, or whenever there is replacement, removal, or addition of a control device, each owner or operator shall conduct a performance test according to the procedures in this section as appropriate, in order to determine compliance with § 60.562–1.

(2) Where a boiler or process heater with a design heat input capacity of 150 million Btu/hour or greater is used, the requirement for an initial performance test is waived, in accordance with § 60.8(b). However, the Administrator reserves the option to require testing at such other times as may be required, as provided for in § 114 of the Act.

(3) The owner or operator shall determine the average organic concentration for each performance test run using the equipment described in § 60.563(a)(4). The average organic concentration shall be determined from measurements taken at least every 15 minutes during each performance test run. The average of the three runs shall be the base value for the monitoring program.

(4) When an absorber is the final unit in the system, the owner or operator shall determine the average specific gravity for each performance test run using specific gravity monitoring equipment described in § 60.563(a)(5). An average specific gravity shall be determined from measurements taken at least every 15 minutes during each performance test run. The average of the three runs shall be the base value for the monitoring program.

(5) When a condenser is the final unit in the system, the owner or operator shall determine the average outlet temperature for each performance test run using the temperature monitoring equipment described in § 60.563(a)(1). An average temperature shall be determined from measurements taken at least every 15 minutes during each performance test run while the vent stream is normally routed and constituted. The average of the three runs shall be the base value for the monitoring program.

(b) The owner or operator shall determine compliance with the emission concentration standard in § 60.562–1(a)(1)(i)(A) or (b)(1)(iii) if applicable [if not, see paragraph (c) of this section] as follows:

(1) The TOC concentration is the sum of the individual components and shall be computed for each run using the following equation:

$$C_{TOC} = \sum_{j=1}^{n} C_j$$

where:

C_{TOC} = Concentration of TOC (minus methane and ethane), dry basis, ppmv.
C_j = the concentration of sample component j, ppm.
n = Number of components in the sample.

(i) Method 18 shall be used to determine the concentration of each individual organic component (C_j) in the gas stream. Method 1 or 1A, as appropriate, shall be used to determine the sampling site at the outlet of the control device. Method 4 shall be used to determine the moisture content, if necessary.

(ii) The sampling time for each run shall be 1 hour in which either an integrated sample or four grab samples shall be taken. If grab sampling is used, then the samples shall be taken at 15 minute intervals.

(2) If supplemental combustion air is used, the TOC concentration shall be corrected to 3 percent oxygen and shall be computed using the following equation:

$$C_{CORR} = C_{MEAS} \times \left(\frac{17.9}{20.9 - \%O_{2d}} \right)$$

where:

C_{CORR} = Concentration of TOC corrected to 3 percent oxygen, dry basis, ppm by volume.
C_{MEAS} = Concentration of TOC (minus methane and ethane), dry basis, ppm by volume, as calculated in paragraph (b)(1) of this section.
$\%O_{2d}$ = Concentration of O_2, dry basis, percent by volume.

The emission rate correction factor, integrated sampling and analysis procedure of Method 3 shall be used to determine the oxygen concentration ($\%O_{2d}$). The sampling site shall be the same as that of the TOC sample and the samples shall be taken during the same time that the TOC samples are taken.

(c) If paragraph (b) of this section is not applicable, then the owner or operator shall determine compliance with the percent emission reduction standard in §60.562–1 (a)(1)(i)(A) or (b)(1)(iii) as follows:

(1) The emission reduction of TOC (minus methane and ethane) shall be determined using the following equation:

$$P = \frac{E_{inlet} - E_{outlet}}{E_{inlet}} \times 100$$

where:

P = Percent emission reduction, by weight.
E_{inlet} = Mass rate of TOC entering the control device, kg TOC/hr.
E_{outlet} = Mass rate of TOC, discharged to the atmosphere, kg TOC/hr.

(2) The mass rates of TOC (E_i, E_o) shall be computed using the following equations:

$$E_i = K_1 \left(\sum_{j=1}^{n} C_{ij} M_{ij} \right) Q_i$$

$$E_o = K_1 \left(\sum_{j=1}^{n} C_{oj} M_{oj} \right) Q_o$$

where:

C_{ij},C_{oj} = Concentration of sample component ''j'' of the gas stream at the inlet and outlet of the control device, respectively, dry basis, ppmv.
M_{ij},M_{oj} = Molecular weight of sample component ''j'' of the gas stream at the inlet and outlet of the control device respectively, g/g-mole (lb/lb-mole).
Q_i,Q_o = Flow rate of the gas stream at the inlet and outlet of the control device, respectively, dscm/hr (dscf/hr).

$K_1 = 4.157 \times 10^{-8}$ [(kg)/g-mole)]/[(g)(ppm)(dscm)] {5.711×10^{-15} [(lb)/(lb-mole)]/(lb)(ppm)(dscf)]}

(i) Method 18 shall be used to determine the concentration of each individual organic component (C_{ij}, C_{oj}) in the gas stream. Method 1 or 1A, as appropriate, shall be used to determine the inlet and outlet sampling sites. The inlet site shall be before the inlet of the control device and after all product recovery units.

(ii) Method 2, 2A, 2C, or 2D, as appropriate, shall be used to determine the volumetric flow rates (Q_i, Q_o). If necessary, Method 4 shall be used to determine the moisture content. Both determinations shall be compatible with the Method 18 determinations.

(iii) Inlet and outlet samples shall be taken simultaneously. The sampling time for each run shall be 1 hour in which either an integrated sample or four grab samples shall be taken. If grab sampling is used, then the samples shall be taken at 15 minute intervals.

(d) An owner or operator shall determine compliance with the individual stream exemptions in §60.560(g) and the procedures specified in Table 3 for compliance with §60.562–1(a)(1) as identified in paragraphs (d)(1) and (2) of this section. An owner or operator using the procedures specified in §60.562–1(a)(1) for determining which continuous process emissions are to be controlled may use calculations demonstrated to be sufficiently accurate as to preclude the necessity of actual testing for purposes of calculating the uncontrolled annual emissions and weight percent of TOC. Owners or operators seeking to exempt streams under §60.560(g) must use the appropriate test procedures specified in this section.

(1) The uncontrolled annual emissions of the individual vent stream shall be determined using the following equation:

$$E_{unc} = K_1 \left(\sum_{j=1}^{n} C_j M_j \right) Q \times 8{,}600 \times \frac{1\ Mg}{1{,}000\ kg}$$

where:

E_{unc}=uncontrolled annual emissions, Mg/yr

C_j=concentration of sample component "j" of the gas stream, dry basis, ppmv.

M_j=Molecular weight of sample component "j" of the gas stream, g/g-mole (lb/lb-mole).

Q=Flow rate of the gas stream, dscm/hr (dscf/hr).

K_1=4.157 × 10^{-8} [(kg)/g-mole)]/[(g)(ppm)(dscm)] {5.711 × 10^{-15} [(lb)/(lb-mole)]/(lb)(ppm)(dscf)]}

8,600=operating hours per year

(i) Method 18 shall be used to determine the concentration of each individual organic component (C_j) in the gas stream. Method 1 or 1A, as appropriate, shall be used to determine the sampling site. If the gas stream is controlled in an existing control device, the sampling site shall be before the inlet of the control device and after all product recovery units.

(ii) Method 2, 2A, 2C, or 2D, as appropriate, shall be used to determine the volumetric flow rate (Q). If necessary, Method 4 shall be used to determine the moisture content. Both determinations shall be compatible with the Method 18 determinations.

(iii) The sampling time for each run shall be 1 hour in which either an integrated sample or four grab samples shall be taken. If grab sampling is used, then the samples shall be taken at 15 minute intervals.

(2) The weight percent VOC of the uncontrolled individual vent stream shall be determined using the following equation:

$$\text{weight \% TOC} = \frac{\sum_{j=1}^{n} C_j M_j}{MW_{gas} \times 10^6} \times 100$$

where:

C_j=concentration of sample TOC component "j" of the gas stream, dry basis, ppmv.

M_j=Molecular weight of sample TOC component "j" of the gas stream, g/g-mole (1b/1b-mole).

MW_{gas}=Average molecular weight of the entire gas stream, g/g-mole (1b/1b-mole).

(i) Method 18 shall be used to determine the concentration of each individual organic component (C_j) in the gas stream. Method 1 or 1A, as appropriate, shall be used to determine the sampling site. If the gas stream is controlled in an existing control device, the sampling site shall be before the inlet of the control device and after all product recovery units. If necessary, Method 4 shall be used to determine the moisture content. This determination shall be compatible with the Method 18 determinations.

(ii) The average molecular weight of the gas stream shall be determined using methods approved by the Administrator. If the carrier component of the gas stream is nitrogen, then an average molecular weight of 28 g/g-mole (lb/lb-mole) may be used in lieu of testing. If the carrier component of the gas stream is air, then an average molecular weight of 29 g/g-mole (lb/lb-mole) may be used in lieu of testing.

(iii) The sampling time for each run shall be 1 hour in which either an integrated sample or four grab samples shall be taken. If grab sampling is used, then the samples shall be taken at 15 minute intervals.

(e) The owner or operator shall determine compliance of flares with the visible emission and flare provisions in §60.562–1 as follows:

(1) Method 22 shall be used to determine visible emissions. The observation period for each run shall be 2 hours.

(2) The monitoring device of §60.563(b)(2) shall be used to determine whether a flame is present.

(f) The owner or operator shall determine compliance with the net heating value provisions in §60.18 as referenced by §60.562–1(a)(1)(i)(C). The net heating value of the process vent stream being combusted in a flare shall be computed as follows:

$$H_T = K_2 \left(\sum_{j=1}^{n} C_j H_j \right)$$

where:

H_T=Net heating value of the sample based on the net enthalpy per mole of offgas combusted at 25 °C and 760 mmHg, but the standard temperature for determining the volume corresponding to one mole is 20 °C, MJ/scm.

K_2=Conversion constant,

$$1.740 \times 10^{-7} \frac{(1)}{\text{ppm}} \frac{(\text{gmole})}{\text{scm}} \frac{(\text{MJ},)}{\text{kcal}}$$

where standard temperature for

$$\frac{(\text{g mole})}{\text{scm}} \text{ is } 20^{\circ}\text{C};$$

C_j=Concentration of sample component j in ppm on a wet basis.
H_j=Net heat of combustion of sample component j, at 25 °C and 760 mm Hg, kcal/g-mole.

(1) Method 18 shall be used to determine the concentration of each individual organic component (C_j) in the gas stream. Method 1 or 1A, as appropriate, shall be used to determine the sampling site to the inlet of the flare. Using this same sample, ASTM D1946–77 (incorporated by reference—see §60.17) shall be used to determine the hydrogen and carbon monoxide content.

(2) The sampling time for each run shall be 1 hour in which either an integrated sample or four grab samples shall be taken. If grab sampling is used, then the samples shall be taken at 15 minute intervals.

(3) Published or calculated values shall be used for the net heats of combustion of the sample components. If values are not published or cannot be calculated, ASTM D2382–76 (incorporated by reference—see §60.17) may be used to determine the net heat of combustion of component ''j.''

(g) The owner or operator shall determine compliance with the exit velocity provisions in §60.18 as referenced by §60.562–1(a)(1)(i)(C) as follows:

(1) If applicable, the net heating value (H_T) of the process vent shall be determined according to the procedures in paragraph (f) of this section to determine the applicable velocity requirements.

(2) If applicable, the maximum permitted velocity (V_{max}) for steam-assisted and nonassisted flares shall be computed using the following equation:

$$\text{Log}_{10}(V_{max})=(H_T+28.8)/31.7$$

where:
V_{max}=Maximum permitted velocity, m/sec.
28.8=Constant.
31.7=Constant.
H_T=The net heating value as determined in paragraph (f) of this section.

(3) The maximum permitted velocity, V_{max}, for air-assisted flares shall be determined by the following equation:

$$V_{max}=8.706+0.7084(H_T)$$

where:
V_{max}=Maximum permitted velocity, m/sec.
8.706=Constant.
0.7084=Constant.
H_T=The net heating value as determined in paragraph (f) of this section.

(4) The actual exit velocity of a flare shall be determined by dividing the volumetric flow rate (in units of standard temperature and pressure), as determined by Method 2, 2A, 2C, or 2D as appropriate, by the unobstructed (free) cross sectional area of the flare tip.

(h) The owner or operator shall determine compliance with the mass emission per mass product standards in §§60.560(d) and (e) and in §§60.562–1(b)(1)(i), (c)(1)(i)(A), (c)(1)(ii)(A), (c)(2)(i), and (c)(2)(ii)(A).

The emission rate of TOC shall be computed using the following equation:

$$ER_{TOC} = \frac{E_{TOC}}{P_p * \text{Mg}/1000\,\text{kg}}$$

Where:
ER_{TOC} = Emission rate of total organic compounds (minus methane and ethane), kg TOC/Mg product.
E_{TOC} = Emission rate of total organic compounds (minus methane and ethane) in the sample, kg/hr.
P_p = The rate of polymer produced, kg/hr.
Mg/1000 kg = Mg of polymer produced per kg of polymer produced.

(1) The mass rate of TOC, E_{TOC}, shall be determined according to the procedures, as appropriate, in paragraph (c)(2) of this section. The sampling site for determining compliance with §§60.560 (d) and (e) shall be before any add-on control devices and after all product recovery devices. Otherwise, the sampling site shall be at the outlet of the control device.

(2) The rate of polymer produced, P_p (kg/hr), shall be determined by dividing the weight of polymer pulled in kilograms (kg) from the process line during the performance test by the number of hours (hr) taken to perform the performance test. The polymer pulled, in kilograms, shall be determined by direct measurement or, subject to prior approval by the Administrator, computed from materials balance by good engineering practice.

(i) The owner or operator shall determine continuous compliance with the

temperature requirements in §§ 60.562–1(b)(1)(ii) and 60.562–1(c)(1)(i)(B) by using the temperature monitoring equipment described in § 60.563(a)(1). An average temperature shall be determined from measurements taken at least every 15 minutes every three hours while the vent stream is normally routed and constituted. Each three-hour period constitutes a performance test.

(j) For purposes of determining compliance with § 60.562–1(c) (1)(ii)(B), (1)(ii)(C), (2)(ii)(B), or (2)(ii)(C), the ethylene glycol concentration in either the cooling tower or the liquid effluent from steam-jet ejectors used to produce a vacuum in the polymerization reactors, whichever is applicable, shall be determined:

(1) Using procedures that conform to the methods described in ASTM D2908–74, ''Standard Practice for Measuring Volatile Organic Matter in Water by Aqueous-Injection Gas Chromatography'' (incorporated by reference—see § 60.17), except as provided in paragraph (j)(2) of this section:

(i) At least one sample per operating day shall be collected using the grab sampling procedures of ASTM D3370–76, ''Standard Practices for Sampling Water'' (incorporated by reference—see § 60.17). An average ethylene glycol concentration by weight shall be calculated on a daily basis over a rolling 14-day period of operating days, except as provided in paragraphs (j)(1) (ii) and (iii) of this section. Each daily average ethylene glycol concentration so calculated constitutes a performance test. Exceedance of the standard during the reduced testing program specified in paragraphs (j)(1) (ii) and (iii) of this section is a violation of these standards.

(ii) For those determining compliance with § 60.562–1(c) (1)(ii)(B) or (2)(ii)(B), the owner or operator may elect to reduce the sampling program to any 14 consecutive day period once every two calendar months, if at least seventeen consecutive 14-day rolling average concentrations immediately preceding the reduced sampling program are each less than 0.10 weight percent ethylene glycol. If the average concentration obtained over the 14 day sampling during the reduced testing period exceeds the upper 95 percent confidence interval calculated from the most recent test results in which no one 14-day average exceeded 0.10 weight percent ethylene glycol, then the owner or operator shall reinstitute a daily sampling program. A reduced sampling program can be reinstituted if the requirements specified in this paragraph are met.

(iii) For those determining compliance with § 60.562–1(c)(1)(ii)(C) or (c)(2)(ii)(C), the owner or operator may elect to reduce the sampling program to any 14 consecutive day period once every two calendar months, if at least seventeen consecutive 14-day rolling average concentrations immediately preceding the reduced sampling program are each less than 1.8 weight percent ethylene glycol. If the average concentration obtained over the 14 day sampling during the reduced test period exceeds the upper 95 percent confidence interval calculated from the most recent test results in which no one 14-day average exceeded 1.8 weight percent ethylene glycol, then the owner or operator shall reinstitute a daily sampling program. A reduced program can be reinstituted if the requirements specified in this paragraph are met.

(iv) The upper 95 percent confidence interval shall be calculated using the equation:

$$CI_{95} = \frac{\sum_{i=1}^{n} X_i}{n} + 2\sqrt{\frac{n\sum x^2 - \left(\sum x\right)^2}{n(n-1)}}$$

where:

X_i=daily ethylene glycol concentration for each day used to calculate each 14-day rolling average used in test results to justify implementing the reduced testing program.

n=number of ethylene glycol concentrations.

(2) Measuring an alternative parameter, such as carbon oxygen demand or biological oxygen demand, that is demonstrated to be directly proportional to the ethylene glycol concentration. Such parameter shall be measured during the initial 14-day performance test during which the facility is shown to be in compliance with the ethylene glycol concentration standard whereby

the ethylene glycol concentration is determined using the procedures described in paragraph (j)(1) of this section. The alternative parameter shall be measured on a daily basis and the average value of the alternative parameter shall be calculated on a daily basis over a rolling 14-day period of operating days. Each daily average value of the alternative parameter constitutes a performance test.

[55 FR 51035, Dec. 11, 1990; 56 FR 9178, Mar. 5, 1991, as amended at 56 FR 12299, Mar. 22, 1991; 64 FR 11541, Mar. 9, 1999]

§ 60.565 Reporting and recordkeeping requirements.

(a) Each owner or operator subject to the provisions of this subpart shall keep an up-to-date, readily-accessible record of the following information measured during each performance test, and shall include the following information in the report of the initial performance test in addition to the written results of such performance tests as required under § 60.8. Where a control device is used to comply with § 60.562–1(a)(1)(i)(D) only, a report containing performance test data need not be submitted, but a report containing the information in § 60.565(a)(11) is required. Where a boiler or process heater with a design heat input capacity of 150 million Btu/hour or greater is used to comply with § 60.562–1(a), a report containing performance test data need not be submitted, but a report containing the information in § 60.565(a)(2)(i) is required. The same information specified in this section shall be submitted in the reports of all subsequently required performance tests where either the emission control efficiency of a combustion device or the outlet concentration of TOC (minus methane and ethane) is determined.

(1) When an incinerator is used to demonstrate compliance with § 60.562–1, except § 60.562–1(a)(2):

(i) The average firebox temperature of the incinerator (or the average temperature upstream and downstream of the catalyst bed), measured at least every 15 minutes and averaged over the performance test period, and

(ii) The percent reduction of TOC (minus methane and ethane) achieved by the incinerator, the concentration of TOC (minus methane and ethane) (ppmv, by compound) at the outlet of the control device on a dry basis, or the emission rate in terms of kilograms TOC (minus methane and ethane) per megagram of product at the outlet of the control device, whichever is appropriate. If supplemental combustion air is used, the TOC concentration corrected to 3 percent oxygen shall be recorded and reported.

(2) When a boiler or process heater is used to demonstrate compliance with § 60.562–1, except § 60.562–1(a)(2):

(i) A description of the location at which the vent stream is introduced into the boiler or process heater, and

(ii) For boiler or process heaters with a design heat input capacity of less than 150 million Btu/hr, all 3-hour periods of operation during which the average combustion temperature was more than 28 °C (50 °F) below the average combustion temperature during the most recent performance test at which compliance was determined.

(3) When a flare is used to demonstrate compliance with § 60.562–1, except § 60.562–1(a)(2):

(i) All visible emission readings, heat content determinations, flow rate measurements, and exit velocity determinations made during the performance test,

(ii) Continuous records of the pilot flame heat-sensing monitoring, and

(iii) Records of all periods of operations during which the pilot flame is absent.

(4) When an incinerator, boiler, or process heater is used to demonstrate compliance with § 60.562–1(a)(2), a description of the location at which the vent stream is introduced into the incinerator, boiler, or process heater.

(5) When a flare is used to demonstrate compliance with § 60.562–1(a)(2):

(i) All visible emission readings made during the performance test,

(ii) Continuous records of the pilot flame heat-sensing monitoring, and

(iii) Records of all periods of operation during which the pilot flame is absent.

(6) When an absorber is the final unit in a system to demonstrate compliance with § 60.562–1, except § 60.562–1(a)(2),

the specific gravity (or alternative parameter that is a measure of the degree of absorbing liquid saturation, if approved by the Administrator), and average temperature, measured at least every 15 minutes and averaged over the performance test period, of the absorbing liquid (both measured while the vent stream is normally routed and constituted).

(7) When a condenser is the final unit in a system to demonstrate compliance with § 60.562–1, except § 60.562–1(a)(2), the average exit (product side) temperature, measured at least every 15 minutes and averaged over the performance test period while the vent stream is normally routed and constituted.

(8) Daily measurement and daily average 14–day rolling average of the ethylene glycol concentration in the liquid effluent exiting the vacuum system servicing the polymerization reaction section, if an owner or operator is subject to § 60.562–1(c) (1)(ii)(B) or (2)(ii)(B), or of the ethylene glycol concentration in the cooling water in the cooling tower, if subject to § 60.562–1(c) (2)(ii)(C) or (2)(iii)(C).

(9) When a carbon adsorber is the final unit in a system to demonstrate compliance with § 60.562–1, except § 60.562–1(a)(2): the concentration level or reading indicated by the organics monitoring device at the outlet of the adsorber, measured at least every 15 minutes and averaged over the performance test period while the vent stream is normally routed and constituted.

(10) When an owner or operator seeks to comply with the requirements of this subpart by complying with the uncontrolled threshold emission rate cutoff provision in §§ 60.560 (d) and (e) or with the individual stream exemptions in § 60.560(g), each process operation variable (e.g., pressure, temperature, type of catalyst) that may result in an increase in the uncontrolled emission rate, if § 60.560(d) or (e) is applicable, or in an increase in the uncontrolled annual emissions or the VOC weight percent, as appropriate, if § 60.560(g) is applicable, should such operating variable be changed.

(11) When an owner or operator uses a control device to comply with § 60.562–1(a)(1)(i)(D) alone: all periods when the control device is not operating.

(b)(1) Each owner or operator subject to the provisions of this subpart shall submit with the initial performance test or, if complying with § 60.562–1(a)(1)(i)(D), as a separate report, an engineering report describing in detail the vent system used to vent each affected vent stream to a control device. This report shall include all valves and vent pipes that could vent the stream to the atmosphere, thereby bypassing the control device, and identify which valves are car-sealed opened and which valves are car-sealed closed.

(2) If a vent system containing valves that could divert the emission stream away from the control device is used, each owner or operator subject to the provisions of this subpart shall keep for at least two years up-to-date, readily accessible continuous records of:

(i) All periods when flow is indicated if flow indicators are installed under § 69.563(d)(1).

(ii) All times when maintenance is performed on car-sealed valves, when the car seal is broken, and when the valve position is changed (i.e., from open to closed for valves in the vent piping to the control device and from closed to open for valves that vent the stream directly or indirectly to the atmosphere bypassing the control device).

(c) Where an incinerator is used to comply with § 60.562–1, except §§ 60.562(a)(1)(i)(D) and (a)(2), each owner or operator subject to the provisions of this subpart shall keep for at least 2 years up-to-date, readily accessible continuous records of:

(1) The temperature measurements specified under § 60.563(b)(1).

(2) Records of periods of operation during which the parameter boundaries established during the most recent performance test are exceeded. Periods of operation during which the parameter boundaries established during the most recent performance test are exceeded are defined as follows:

(i) For noncatalytic incinerators, all 3–hour periods of operation during which the average combustion temperature was more than 28 °C (50 °F)

below the average combustion temperature during the most recent performance test at which compliance was demonstrated.

(ii) For catalytic incinerators, all 3-hour periods of operation during which the average temperature of the vent stream immediately before the catalyst bed is more than 28 °C (50 °F) below the average temperature of the vent stream during the most recent performance test at which compliance was demonstrated. The owner or operator also shall record all 3-hour periods of operation during which the average temperature difference across the catalyst bed is less than 80 percent of the average temperature difference across the catalyst bed during the most recent performance test at which compliance was demonstrated.

(d) Where a boiler or process heater is used to comply with §60.562–1, except §§60.562–1 (a)(1)(i)(D) and (a)(2), each owner or operator subject to the provisions of this subpart shall keep for at least 2 years up-to-date, readily accessible continuous records of:

(1) Where a boiler or process heater with a heat input design capacity of 150 million Btu/hr or greater is used, all periods of operation of the boiler or process heater. (Examples of such records could include records of steam use, fuel use, or monitoring data collected pursuant to other State or Federal regulatory requirements), and

(2) Where a boiler or process heater with a heat input design capacity of less than 150 million Btu/hr is used, all periods of operation during which the parameter boundaries established during the most recent performance test are exceeded. Periods of operation during which the parameter boundaries established during the most recent performance test are exceeded are defined as all 3-hour periods of operation during which the average combustion temperature was more than 28 °C (50 °F) below the average combustion temperature during the most recent performance test at which compliance was demonstrated.

(e) Where a flare is used to comply with §60.562–1, except §60.562–1(a)(1)(i)(D), each owner or operator subject to the provisions of this subpart shall keep for at least 2 years up-to-date, readily accessible continuous records of:

(1) The flare or pilot light flame heat sensing monitoring specified under §60.563(b)(2), and

(2) All periods of operation in which the flare or pilot flame, as appropriate, is absent.

(f) Where an adsorber, condenser, absorber, or a control device other than a flare, incinerator, boiler, or process heater is used to comply with §60.562–1, except §60.562–1(a)(1)(i)(D), each owner or operator subject to the provisions of this subpart shall keep for at least 2 years up-to-date, readily-accessible continuous records of the periods of operation during which the parameter boundaries established during the most recent performance test are exceeded. Where an owner or operator seeks to comply with §60.562–1, periods of operation during which the parameter boundaries established during the most recent performance tests are exceeded are defined as follows:

(1) Where an absorber is the final unit in a system:

(i) All 3-hour periods of operation during which the average absorbing liquid temperature was more than 11 °C (20 °F) above the average absorbing liquid temperature during the most recent performance test at which compliance was demonstrated are exceeded, and

(ii) All 3-hour periods of operation during which the average absorbing liquid specific gravity was more than 0.1 unit above, or more than 0.1 unit below, the average absorbing liquid specific gravity during the most recent performance test at which compliance was demonstrated (unless monitoring of an alternative parameter that is a measure of the degree of absorbing liquid saturation is approved by the Administrator, in which case he or she will define appropriate parameter boundaries and periods of operation during which they are exceeded).

(2) Where a condenser is the final unit in a system, all 3-hour periods of operation during which the average condenser operating temperature was more than 6 °C (10 °F) above the average operating temperature during the most recent performance test at which compliance was demonstrated.

(3) Where a carbon adsorber is the final unit in a system, all 3-hour periods of operation during which the average organic concentration level in the carbon adsorber gases is more than 20 percent greater than the exhaust gas concentration level or reading measured by the organics monitoring system during the most recent performance test at which compliance was demonstrated.

(g) Each owner or operator of an affected facility subject to the provisions of this subpart and seeking to demonstrate compliance with §60.562–1 shall keep up-to-date, readily accessible records of:

(1) Any changes in production capacity, feedstock type, or catalyst type, or of any replacement, removal or addition of product recovery equipment; and

(2) The results of any performance test performed pursuant to the procedures specified by §60.564.

(h) Each owner or operator of an affected facility that seeks to comply with the requirements of this subpart by complying with the uncontrolled threshold emission rate cutoff provision in §§60.560 (d) and (e) or with the individual stream exemptions in §60.560(g) shall keep for at least 2 years up-to-date, readily accessible records of any change in process operation that increases the uncontrolled emission rate of the process line in which the affected facility is located, if §60.560 (d) or (e) is applicable, or that increases the uncontrolled annual emissions or the VOC weight percent of the individual stream, if §60.560(g) is applicable.

(i) Each owner and operator subject to the provisions of this subpart is exempt from §60.7(c) of the General Provisions.

(j) The Administrator will specify appropriate reporting and recordkeeping requirements where the owner or operator of an affected facility complies with the standards specified under §60.562–1 other than as provided under §60.565 (a) through (e).

(k) Each owner or operator that seeks to comply with the requirements of this subpart by complying with the uncontrolled threshold emission rate cutoff provision of §§60.560 (d) and (e), the individual stream exemptions of §60.560(g), or the requirements of §60.562–1 shall submit to the Administrator semiannual reports of the following recorded information, as applicable. The initial report shall be submitted within 6 months after the initial start-up date.

(1) Exceedances of monitored parameters recorded under §§60.565 (c), (d)(2), and (f).

(2) All periods recorded under §60.565(b) when the vent stream has been diverted from the control device.

(3) All periods recorded under §60.565(d) when the boiler or process heater was not operating.

(4) All periods recorded under §60.565(e) in which the flare or pilot flame was absent.

(5) All periods recorded under §60.565(a)(8) when the 14-day rolling average exceeded the standard specified in §60.562–1(c) (1)(ii)(B), (1)(ii)(C), (2)(ii)(B), or (2)(ii)(C), as applicable.

(6) Any change in process operations that increases the uncontrolled emission rate of the process line in which the affected facility is located, as recorded in §60.565(h).

(7) Any change in process operations that increases the uncontrolled annual emissions or the VOC weight percent of the individual stream, as recorded in §60.565(h).

(l) Each owner or operator subject to the provisions of this subpart shall notify the Administrator of the specific provisions of §60.562, §60.560(d), or §60.560(e), as applicable, with which the owner or operator has elected to comply. Notification shall be submitted with the notification of initial startup required by §60.7(a)(3). If an owner or operator elects at a later date to use an alternative provision of §60.562 with which he or she will comply or becomes subject to §60.562 for the first time (i.e., the owner or operator can no longer meet the requirements of this subpart by complying with the uncontrolled threshold emission rate cutoff provision in §60.560 (d) or (e)), then the owner or operator shall notify the Administrator 90 days before implementing a change and, upon implementing a change, a performance test shall be performed as specified in §60.564.

(m) The requirements of this subsection remain in force until and unless EPA, in delegating enforcement authority to a State under section 111(c) of the Act, approves alternative reporting requirements or means of compliance surveillance adopted by such State. In that event, affected sources within the State will be relieved of the obligation to comply with this subsection, provided that they comply with the requirements established by the State.

[55 FR 51035, Dec. 11, 1990; 56 FR 9178, Mar. 5, 1991, as amended at 56 FR 12299, Mar. 22, 1991]

§ 60.566 Delegation of authority.

(a) In delegating implementation and enforcement authority to a State under section 111(c) of the Act, the authority contained in paragraph (b) of this section shall be retained by the Administrator and not transferred to a State.

(b) Authority which will not be delegated to States: § 60.562–2(c).

Subpart EEE [Reserved]

Subpart FFF—Standards of Performance for Flexible Vinyl and Urethane Coating and Printing

SOURCE: 49 FR 26892, June 29, 1984, unless otherwise noted.

§ 60.580 Applicability and designation of affected facility.

(a) The affected facility to which the provisions of this subpart apply is each rotogravure printing line used to print or coat flexible vinyl or urethane products.

(b) This subpart applies to any affected facility which begins construction, modification, or reconstruction after January 18, 1983.

(c) For facilities controlled by a solvent recovery emission control device, the provisions of § 60.584(a) requiring monitoring of operations will not apply until EPA has promulgated performance specifications under appendix B for the continuous monitoring system. After the promulgation of performance specifications, these provisions will apply to each affected facility under paragraph (b) of this section. Facilities controlled by a solvent recovery emission control device that become subject to the standard prior to promulgation of performance specifications must conduct performance tests in accordance with § 60.13(b) after performance specifications are promulgated.

§ 60.581 Definitions and symbols.

(a) All terms used in this subpart, not defined below, are given the same meaning as in the Act or in subpart A of this part.

Emission control device means any solvent recovery or solvent destruction device used to control volatile organic compounds (VOC) emissions from flexible vinyl and urethane rotogravure printing lines.

Emission control system means the combination of an emission control device and a vapor capture system for the purpose of reducing VOC emissions from flexible vinyl and urethane rotogravure printing lines.

Flexible vinyl and urethane products mean those products, except for resilient floor coverings (1977 Standard Industry Code 3996) and flexible packaging, that are more than 50 micrometers (0.002 inches) thick, and that consist of or contain a vinyl or urethane sheet or a vinyl or urethane coated web.

Gravure cylinder means a plated cylinder with a printing image consisting of minute cells or indentations, specifically engraved or etched into the cylinder's surface to hold ink when continuously revolved through a fountain of ink.

Ink means any mixture of ink, coating solids, organic solvents including dilution solvent, and water that is applied to the web of flexible vinyl or urethane on a rotogravure printing line.

Ink solids means the solids content of an ink as determined by Reference Method 24, ink manufacturer's formulation data, or plant blending records.

Inventory system means a method of physically accounting for the quantity of ink, solvent, and solids used at one or more affected facilities during a time period. The system is based on plant purchase or inventory records.

Plant blending records means those records which document the weight fraction of organic solvents and solids used in the formulation or preparation of inks at the vinyl or urethane printing plant where they are used.

Rotogravure print station means any device designed to print or coat inks on one side of a continuous web or substrate using the intaglio printing process with a gravure cylinder.

Rotogravure printing line means any number of rotogravure print stations and associated dryers capable of printing or coating simultaneously on the same continuous vinyl or urethane web or substrate, which is fed from a continuous roll.

Vapor capture system means any device or combination of devices designed to contain, collect, and route organic solvent vapors emitted from the flexible vinyl or urethane rotogravure printing line.

(b) All symbols used in this subpart not defined below are given the same meaning as in the Act or in subpart A of this part.

a = the gas stream vents exiting the emission control device.

b = the gas stream vents entering the emission control device.

f = the gas stream vents which are not directed to an emission control device.

C_{aj} = the concentration of VOC in each gas stream (j) for the time period exiting the emission control device, in parts per million by volume.

C_{bi} = the concentration of VOC in each gas stream (i) for the time period entering the emission control device, in parts per million by volume.

C_{fk} = the concentration of VOC in each gas stream (k) for the time period which is not directed to an emission control device, in parts per million by volume.

G = the weighted average mass of VOC per mass of ink solids applied, in kilograms per kilogram.

M_{ci} = the total mass of each ink (i) applied in the time period as determined from plant records, in kilograms.

M_{dj} = the total mass of each dilution solvent (j) added at the print line in the time period determined from plant records, in kilograms.

Q_{aj} = the volumetric flow rate of each effluent gas stream (j) exiting the emission control device, in standard cubic meters per hour.

Q_{bi} = the volumetric flow rate of each effluent gas stream (i) entering the emission control device, in standard cubic meters per hour.

Q_{fk} = the volumetric flow rate of each effluent gas stream (k) not directed to an emission control device, in standard cubic meters per hour.

E = the VOC emission reduction efficiency (as a fraction) of the emission control device during performance testing.

F = the VOC emission capture efficiency (as a fraction) of the vapor capture system during performance testing.

W_{oi} = the weight fraction of VOC in each ink (i) used in the time period as determined from Reference Method 24, manufacturer's formulation data, or plant blending records, in kilograms per kilogram.

W_{si} ''means the weight fraction of solids in each ink (i) used in the time period as determined from Reference Method 24, manufacturer's formulation data, or plant blending records, in kilograms per kilogram.

W_{oj} = the weight fraction of VOC in each dilution solvent (j) added at the print line in the time period determined from Reference Method 24, manufacturer's formulation data, or plant blending records, in kilograms per kilogram.

[49 FR 26892, June 29, 1984; 49 FR 32848, Aug. 17, 1984]

§ 60.582 Standard for volatile organic compounds.

(a) On and after the date on which the performance test required by § 60.8 has been completed, each owner or operator subject to this subpart shall either:

(1) Use inks with a weighted average VOC content less than 1.0 kilogram VOC per kilogram ink solids at each affected facility, or

(2) Reduce VOC emissions to the atmosphere by 85 percent from each affected facility.

(b) [Reserved]

§ 60.583 Test methods and procedures.

(a) Reference Methods in appendix A of this part, except as provided under § 60.8(b), shall be used to determine compliance with § 60.582(a) as follows:

(1) Method 24 for analysis of inks. If nonphotochemically reactive solvents are used in the inks, standard gas chromatographic techniques may be used to identify and quantify these solvents. The results of Reference Method 24 may be adjusted to subtract these solvents from the measured VOC content.

(2) Method 25A for VOC concentration (the calibration gas shall be propane);

(3) Method 1 for sample and velocity traverses;

(4) Method 2 for velocity and volumetric flow rates;

(5) Method 3 for gas analysis;

(6) Method 4 for stack gas moisture.

(b) To demonstrate compliance with § 60.582(a)(1), the owner or operator of an affected facility shall determine the weighted average VOC content of the inks according to the following procedures:

(1) Determine and record the VOC content and amount of each ink used at the print head, including the VOC content and amount of diluent solvent, for any time periods when VOC emission control equipment is not used.

(2) Compute the weighted average VOC content by the following equation:

$$G = \frac{\sum_{i=1}^{n} (W_{oi} M_{ci}) + \sum_{j=1}^{m} (W_{oj} M_{dj})}{\sum_{i=1}^{n} (M_{ci} W_{si})}$$

(3) The weighted average VOC content of the inks shall be calculated over a period that does not exceed one calendar month, or four consecutive weeks. A facility that uses an accounting system based on quarters consisting of two 28 calendar day periods and one 35 calendar day period may use an averaging period of 35 calendar days four times per year, provided the use of such an accounting system is documented in the initial performance test.

(4) Each determination of the weighted average VOC content shall constitute a performance test for any period when VOC emission control equipment is not used. Results of the initial performance test must be reported to the Administrator. Reference Method 24 or ink manufacturers' formulation data along with plant blending records (if plant blending is done) may be used to determine VOC content. The Administrator may require the use of Reference Method 24 if there is a question concerning the accuracy of the ink manufacturer's data or plant blending records.

(5) If, during the time periods when emission control equipment is not used, all inks used contain less than 1.0 kilogram VOC per kilogram ink solids, the owner or operator is not required to calculate the weighted average VOC content, but must verify and record the VOC content of each ink (including any added dilution solvent) used as determined by Reference Method 24, ink manufacturers' formulation data, or plant blending records.

(c) To demonstrate compliance with § 60.582(a)(1), the owner or operator may determine the weighted average VOC content using an inventory system.

(1) The inventory system shall accurately account to the nearest kilogram for the VOC content of all inks and dilution solvent used, recycled, and discarded for each affected facility during the averaging period. Separate records must be kept for each affected facility.

(2) To determine VOC content of inks and dilution solvent used or recycled, Reference Method 24 or ink manufacturers' formulation data must be used in combination with plant blending records (if plant blending is done) or inventory records or purchase records for new inks or dilution solvent.

(3) For inks to be discarded, only Reference Method 24 shall be used to determine the VOC content. Inks to be discarded may be combined prior to measurement of volume or weight and testing by Reference Method 24.

(4) The Administrator may require the use of Reference Method 24 if there is a question concerning the accuracy of the ink manufacturer's data or plant records.

(5) The Administrator shall approve the inventory system of accounting for

VOC content prior to the initial performance test.

(d) To demonstrate compliance with § 60.582(a)(2), the owner or operator of an affected facility controlled by a solvent recovery emission control device or an incineration control device shall conduct a performance test to determine overall VOC emission control efficiency according to the following procedures:

(1) The performance test shall consist of three runs. Each test run must last a minimum of 30 minutes and shall continue until the printing operation is interrupted or until 180 minutes of continuous operation occurs. During each test run, the print line shall be printing continuously and operating normally. The VOC emission reduction efficiency achieved for each test run is averaged over the entire test run period.

(2) VOC concentration values at each site shall be measured simultaneously.

(3) The volumetric flow rate shall be determined from one Method 2 measurement for each test run conducted immediately prior to, during, or after that test run. Volumetric flow rates at each site do not need to be measured simultaneously.

(4) In order to determine capture efficiency from an affected facility, all fugitive VOC emissions from the affected facility shall be captured and vented through stacks suitable for measurement. During a performance test, the owner or operator of an affected facility located in an area with other sources of VOC shall isolate the affected facility from other sources of VOC. These two requirements shall be accomplished using one of the following methods:

(i) Build a permanent enclosure around the affected facility;

(ii) Build a temporary enclosure around the affected facility and duplicate, to an extent that is reasonably feasible, the ventilation conditions that are in effect when the affected facility is not enclosed (one way to do this is to divide the room exhaust rate by the volume of the room and then duplicate that quotient or 20 air changes per hour, whichever is smaller, in the temporary enclosure); or

(iii) Shut down all other sources of VOC and continue to exhaust fugitive emissions from the affected facility through any building ventilation system and other room exhausts such as print line ovens and embossers.

(5) For each affected facility, compliance with § 60.582(a)(2) has been demonstrated if the average value of the overall control efficiency (EF) for the three runs is equal to or greater than 85 percent. An overall control efficiency is calculated for each run as follows:

(i) For efficiency of the emission control device,

$$E = \frac{\sum_{i=1}^{n}\left(Q_{bi}C_{bi}\right) - \sum_{j=1}^{m}\left(Q_{aj}C_{aj}\right)}{\sum_{i=1}^{n}\left(Q_{bi}C_{bi}\right)}$$

(ii) For efficiency of the vapor capture system,

$$F = \frac{\sum_{i=1}^{n}\left(Q_{bi}C_{bi}\right)}{\sum_{i=1}^{n}\left(Q_{bi}C_{bi}\right) + \sum_{k=1}^{p}\left(Q_{fk}C_{fk}\right)}$$

[49 FR 26892, June 29, 1984; 49 FR 32848, Aug. 17, 1984]

§ 60.584 Monitoring of operations and recordkeeping requirements.

(a) The owner or operator of an affected facility controlled by a solvent recovery emission control device shall install, calibrate, operate, and maintain a monitoring system which continuously measures and records the VOC concentration of the exhaust vent stream from the control device and shall comply with the following requirements:

(1) The continuous monitoring system shall be installed in a location that is representative of the VOC concentration in the exhaust vent, at least two equivalent stack diameters from the exhaust point, and protected from interferences due to wind, weather, or other processes.

(2) During the performance test, the owner or operator shall determine and record the average exhaust vent VOC

concentration in parts per million by volume. After the performance test, the owner or operator shall determine and, in addition to the record made by the continuous monitoring device, record the average exhaust vent VOC concentration for each 3-hour clock period of printing operation when the average concentration is greater than 50 ppm and more than 20 percent greater than the average concentration value demonstrated during the most recent performance test.

(b) The owner or operator of an affected facility controlled by a thermal incineration emission control device shall install, calibrate, operate, and maintain a monitoring device that continuously measures and records the temperature of the control device exhaust gases and shall comply with the following requirements:

(1) The continuous monitoring device shall be calibrated annually and have an accuracy of ±0.75 percent of the temperature being measured or ±2.5°C, whichever is greater.

(2) During the performance test, the owner or operator shall determine and record the average temperature of the control device exhaust gases. After the performance test, the owner or operator shall determine and record, in addition to the record made by the continuous monitoring device, the average temperature for each 3-hour clock period of printing operation when the average temperature of the exhaust gases is more than 28°C below the average temperature demonstrated during the most recent performance test.

(c) The owner or operator of an affected facility controlled by a catalytic incineration emission control device shall install, calibrate, operate, and maintain monitoring devices that continuously measure and record the gas temperatures both upstream and downstream of the catalyst bed and shall comply with the following requirements:

(1) Each continuous monitoring device shall be calibrated annually and have an accuracy of ±0.75 percent of the temperature being measured or ±2.5°C, whichever is greater.

(2) During the performance test, the owner or operator shall determine and record the average gas temperature both upstream and downstream of the catalyst bed. After the performance test, the owner or operator shall determine and record, in addition to the record made by the continuous monitoring device, the average temperatures for each 3-hour clock period of printing operation when the average temperature of the gas stream before the catalyst bed is more than 28°C below the average temperature demonstrated during the most recent performance test or the average temperature difference across the catalyst bed is less than 80 percent of the average temperature difference of the device during the most recent performance test.

(d) The owner or operator of an affected facility shall record time periods of operation when an emission control device is not in use.

§ 60.585 Reporting requirements.

(a) For all affected facilities subject to compliance with § 60.582, the performance test data and results from the performance test shall be submitted to the Administrator as specified in § 60.8(a).

(b) The owner or operator of each affected facility shall submit semiannual reports to the Administrator of occurrences of the following:

(1) Exceedances of the weighted average VOC content specified in § 60.582(a)(1);

(2) Exceedances of the average value of the exhaust vent VOC concentration as defined under § 60.584(a)(2);

(3) Drops in the incinerator temperature as defined under § 60.584(b)(2); and

(4) Drops in the average temperature of the gas stream immediately before the catalyst bed or drops in the average temperature across the catalyst bed as defined under § 60.584(c)(2).

(c) The reports required under paragraph (b) shall be postmarked within 30 days following the end of the second and fourth calendar quarters.

(d) The requirements of this subsection remain in force until and unless the Agency, in delegating enforcement authority to a State under section 111(c) of the Act, approves reporting requirements or an alternative means of compliance surveillance adopted by such States. In that event,

affected sources within the State will be relieved of the obligation to comply with this subsection, provided that they comply with requirements established by the State.

Subpart GGG—Standards of Performance for Equipment Leaks of VOC in Petroleum Refineries

SOURCE: 49 FR 22606, May 30, 1984, unless otherwise noted.

§ 60.590 Applicability and designation of affected facility.

(a)(1) The provisions of this subpart apply to affected facilities in petroleum refineries.

(2) A compressor is an affected facility.

(3) The group of all the equipment (defined in § 60.591) within a process unit is an affected facility.

(b) Any affected facility under paragraph (a) of this section that commences construction or modification after January 4, 1983, is subject to the requirements of this subpart.

(c) Addition or replacement of equipment (defined in § 60.591) for the purpose of process improvement which is accomplished without a capital expenditure shall not by itself be considered a modification under this subpart.

(d) Facilities subject to subpart VV or subpart KKK of 40 CFR part 60 are excluded from this subpart.

§ 60.591 Definitions.

As used in this subpart, all terms not defined herein shall have the meaning given them in the act, in subpart A of part 60, or in subpart VV of part 60, and the following terms shall have the specific meanings given them.

Alaskan North Slope means the approximately 69,000 square mile area extending from the Brooks Range to the Arctic Ocean.

Equipment means each valve, pump, pressure relief device, sampling connection system, open-ended valve or line, and flange or other connector in VOC service. For the purposes of recordkeeping and reporting only, compressors are considered equipment.

In hydrogen service means that a compressor contains a process fluid that meets the conditions specified in § 60.593(b).

In light liquid service means that the piece of equipment contains a liquid that meets the conditions specified in § 60.593(c).

Petroleum means the crude oil removed from the earth and the oils derived from tar sands, shale, and coal.

Petroleum refinery means any facility engaged in producing gasoline, kerosene, distillate fuel oils, residual fuel oils, lubricants, or other products through the distillation of petroleum, or through the redistillation, cracking, or reforming of unfinished petroleum derivatives.

Process unit means components assembled to produce intermediate or final products from petroleum, unfinished petroleum derivatives, or other intermediates; a process unit can operate independently if supplied with sufficient feed or raw materials and sufficient storage facilities for the product.

§ 60.592 Standards.

(a) Each owner or operator subject to the provisions of this subpart shall comply with the requirements of §§ 60.482–1 to 60.482–10 as soon as practicable, but no later than 180 days after initial startup.

(b) An owner or operator may elect to comply with the requirements of §§ 60.483–1 and 60.483–2.

(c) An owner or operator may apply to the Administrator for a determination of equivalency for any means of emission limitation that achieves a reduction in emissions of VOC at least equivalent to the reduction in emissions of VOC achieved by the controls required in this subpart. In doing so, the owner or operator shall comply with requirements of § 60.484.

(d) Each owner or operator subject to the provisions of this subpart shall comply with the provisions of § 60.485 except as provided in § 60.593.

(e) Each owner or operator subject to the provisions of this subpart shall comply with the provisions of §§ 60.486 and 60.487.

§ 60.593 Exceptions.

(a) Each owner or operator subject to the provisions of this subpart may comply with the following exceptions to the provisions of subpart VV.

(b)(1) Compressors in hydrogen service are exempt from the requirements of § 60.592 if an owner or operator demonstrates that a compressor is in hydrogen service.

(2) Each compressor is presumed not be be in hydrogen service unless an owner or operator demonstrates that the piece of equipment is in hydrogen service. For a piece of equipment to be considered in hydrogen service, it must be determined that the percent hydrogen content can be reasonably expected always to exceed 50 percent by volume. For purposes of determining the percent hydrogen content in the process fluid that is contained in or contacts a compressor, procedures that conform to the general method described in ASTM E–260, E–168, or E–169 (incorporated by reference as specified in § 60.17) shall be used.

(3)(i) An owner or operator may use engineering judgment rather than procedures in paragraph (b)(2) of this section to demonstrate that the percent content exceeds 50 percent by volume, provided the engineering judgment demonstrates that the content clearly exceeds 50 percent by volume. When an owner or operator and the Administrator do not agree on whether a piece of equipment is in hydrogen service, however, the procedures in paragraph (b)(2) shall be used to resolve the disagreement.

(ii) If an owner or operator determines that a piece of equipment is in hydrogen service, the determination can be revised only after following the procedures in paragraph (b)(2).

(c) Any existing reciprocating compressor that becomes an affected facility under provisions of § 60.14 or § 60.15 is exempt from § 60.482 (a), (b), (c), (d), (e), and (h) provided the owner or operator demonstrates that recasting the distance piece or replacing the compressor are the only options available to bring the compressor into compliance with the provisions of § 60.482 (a), (b), (c), (d), (e), and (h).

(d) An owner or operator may use the following provision in addition to § 60.485(e): Equipment is in light liquid service if the percent evaporated is greater than 10 percent at 150°C as determined by ASTM Method D–86 (incorporated by reference as specified in § 60.18).

(e) Pumps in light liquid service and valves in gas/vapor and light liquid service within a procesic compounds of usually high molecular weight that consist of many repeated links, each link being a relatively light and simple molecule.

Subpart HHH—Standards of Performance for Synthetic Fiber Production Facilities

SOURCE: 49 FR 13651, Apr. 5, 1984, unless otherwise noted.

§ 60.600 Applicability and designation of affected facility.

(a) Except as provided in paragraph (b) of this section, the affected facility to which the provisions of this subpart apply is each solvent-spun synthetic fiber process that produces more than 500 megagrams of fiber per year.

(b) The provisions of this subpart do not apply to any facility that uses the reaction spinning process to produce spandex fiber or the viscose process to produce rayon fiber.

(c) The provisions of this subpart apply to each facility as identified in paragraph (a) of this section and that commences construction or reconstruction after November 23, 1982. The provisions of this subpart do not apply to facilities that commence modification but not reconstruction after November 23, 1982.

§ 60.601 Definitions.

All terms that are used in this subpart and are not defined below are given the same meaning as in the Act and in subpart A of this part.

Acrylic fiber means a manufactured synthetic fiber in which the fiber-forming substance is any long-chain synthetic polymer composed of at least 85 percent by weight of acrylonitrile units.

Makeup solvent means the solvent introduced into the affected facility that compensates for solvent lost from the

affected facility during the manufacturing process.

Nongaseous losses means the solvent that is not volatilized during fiber production, and that escapes the process and is unavailable for recovery, or is in a form or concentration unsuitable for economical recovery.

Polymer means any of the natural or synthetic compounds of usually high molecular weight that consist of many repeated links, each link being a relatively light and simple molecule.

Precipitation bath means the water, solvent, or other chemical bath into which the polymer or prepolymer (partially reacted material) solution is extruded, and that causes physical or chemical changes to occur in the extruded solution to result in a semihardened polymeric fiber.

Rayon fiber means a manufactured fiber composed of regenerated cellulose, as well as manufactured fibers composed of regenerated cellulose in which substituents have replaced not more than 15 percent of the hydrogens of the hydroxyl groups.

Reaction spinning process means the fiber-forming process where a prepolymer is extruded into a fluid medium and solidification takes place by chemical reaction to form the final polymeric material.

Recovered solvent means the solvent captured from liquid and gaseous process streams that is concentrated in a control device and that may be purified for reuse.

Solvent feed means the solvent introduced into the spinning solution preparation system or precipitation bath. This feed stream includes the combination of recovered solvent and makeup solvent.

Solvent inventory variation means the normal changes in the total amount of solvent contained in the affected facility.

Solvent recovery system means the equipment associated with capture, transportation, collection, concentration, and purification of organic solvents. It may include enclosures, hoods, ducting, piping, scrubbers, condensers, carbon adsorbers, distillation equipment, and associated storage vessels.

Solvent-spun synthetic fiber means any synthetic fiber produced by a process that uses an organic solvent in the spinning solution, the precipitation bath, or processing of the sun fiber.

Solvent-spun synthetic fiber process means the total of all equipment having a common spinning solution preparation system or a common solvent recovery system, and that is used in the manufacture of solvent-spun synthetic fiber. It includes spinning solution preparation, spinning, fiber processing and solvent recovery, but does not include the polymer production equipment.

Spandex fiber means a manufactured fiber in which the fiber-forming substance is a long chain synthetic polymer comprised of at least 85 percent of a segmented polyurethane.

Spinning solution means the mixture of polymer, prepolymer, or copolymer and additives dissolved in solvent. The solution is prepared at a viscosity and solvent-to-polymer ratio that is suitable for extrusion into fibers.

Spinning solution preparation system means the equipment used to prepare spinning solutions; the system includes equipment for mixing, filtering, blending, and storage of the spinning solutions.

Synthetic fiber means any fiber composed partially or entirely of materials made by chemical synthesis, or made partially or entirely from chemically-modified naturally-occurring materials.

Viscose process means the fiber forming process where cellulose and concentrated caustic soda are reacted to form soda or alkali cellulose. This reacts with carbon disulfide to form sodium cellulose xanthate, which is then dissolved in a solution of caustic soda. After ripening, the solution is spun into an acid coagulating bath. This precipitates the cellulose in the form of a regenerated cellulose filament.

[49 FR 13651, Apr. 5, 1984; 49 FR 18096, Apr. 27, 1984]

§ 60.602 Standard for volatile organic compounds.

(a) On and after the date on which the initial performance test required to be conducted by § 60.8 is completed, no

owner or operator subject to the provisions of this subpart shall cause the discharge into the atmosphere from any affected facility that produces acrylic fibers, VOC emissions that exceed 10 kilograms (kg) VOC per megagram (Mg) solvent feed to the spinning solution preparation system or precipitation bath. VOC emissions from affected facilities that produce both acrylic and nonacrylic fiber types shall not exceed 10 kg VOC per Mg solvent feed. VOC emissions from affected facilities that produce only nonacrylic fiber types shall not exceed 17 kg VOC per Mg solvent feed. Compliance with the emission limitations is determined on a 6-month rolling average basis as described in § 60.603.

§ 60.603 Performance test and compliance provisions.

(a) Section 60.8(f) does not apply to the performance test procedures required by this subpart.

(b) Each owner or operator of an affected facility shall determine compliance with the applicable standard in § 60.602(a) by determining and recording monthly the VOC emissions per Mg solvent feed from each affected facility for the current and preceding 5 consecutive calendar months and using these values to calculate the 6-month average emissions. Each calculation is considered a performance test. The owner or operator of an affected facility shall use the following procedure to determine VOC emissions for each calendar month;

(1) Install, calibrate, maintain, and operate monitoring devices that continuously measure and permanently record for each calendar month the amount of makeup solvent and solvent feed. These values shall be used in calculating VOC emissions according to paragraph (b)(2) of this section. All monitoring devices, meters, and peripheral equipment shall be calibrated and any error recorded. Total compounded error of the flow measuring and recording devices shall not exceed 1 percent accuracy over the operating range. As an alternative to measuring solvent feed, the owner or operator may:

(i) Measure the amount of recovered solvent returned to the solvent feed storage tanks, and use the following equation to determine the amount of solvent feed:

Solvent Feed=Makeup Solvent+Recovered Solvent+Change in the Amount of Solvent Contained in the Solvent Feed Holding Tank.

(ii) Measure and record the amount of polymer introduced into the affected facility and the solvent-to-polymer ratio of the spinning solutions, and use the following equation to determine the amount of solvent feed:

$$\text{Solvent Feed} = \sum_{i=1}^{n}$$

where subscript ''i'' denotes each particular spinning solution used during the test period; values of ''i'' vary from one to the total number of spinning solutions, ''n,'' used during the calendar month.

(2) VOC emissions shall be determined each calendar month by use of the following equations:

$$E = \frac{M_w}{S_W} - N - I \text{ and } M_w = M_V S_p D$$

$$S_W = \frac{S_v S_p P}{1000}$$

$$I = \frac{I_E - I_S}{S_W}$$

where all values are for the calendar month only and where

E=Emissions in kg per Mg solvent feed;
S_v=Measured or calculated volume of solvent feed in liters;
S_W=Weight of solvent feed in Mg;
M_V=Measured volume of makeup solvent in liters;
M_W=Weight of makeup in kg;
N=Allowance for nongaseous losses per Mg solvent feed; (13 kg/Mg);
S_p=Fraction of measured volume that is actual solvent (excludes water);
D=Density of the solvent in kg/liter;
I=Allowance for solvent inventory variation or changes in the amount of solvent contained in the affected facility per Mg solvent feed (may be positive or negative);
I_S=Amount in kg of solvent contained in the affected facility at the beginning of test period, as determined by owner or operator;
I_E=Amount in kg of solvent contained in the affected facility at the close of test period, as determined by owner or operator.

(i) N, as used in the equation in paragraph (b)(2) of this section, equals 13 kg per Mg solvent feed to the spinning solution preparation system and precipitation bath. This value shall be used in all cases unless an owner or operator demonstrates to the satisfaction of the Administrator that greater nongaseous losses occur at the affected facility. In this case, the greater value may be substituted in the equation.

[49 FR 13651, Apr. 5, 1984; 49 FR 18096, Apr. 27, 1984]

§ 60.604 Reporting requirements.

(a) The owner or operator of an affected facility shall submit a written report to the Administrator of the following:

(1) The results of the initial performance test; and

(2) The results of subsequent performance tests that indicate that VOC emissions exceed the standards in § 60.602. These reports shall be submitted quarterly at 3-month intervals after the initial performance test. If no exceedances occur during a particular quarter, a report stating this shall be submitted to the Administrator semiannually.

(b) Solvent-spun synthetic fiber producing facilities exempted from these standards in § 60.600(a) (those producing less than 500 megagrams annually) shall report to the Administrator within 30 days whenever extruded fiber for the preceding 12 calendar months exceeds 500 megagrams.

(c) The requirements of this section remain in force until and unless EPA, in delegating enforcement authority to a State under section 111(c) of the Act, approves reporting requirements or an alternate means of compliance surveillance adopted by such State. In that event, affected sources within the State will be relieved of the obligation to comply with this section, provided that they comply with the requirements established by the State.

[49 FR 13651, Apr. 5, 1984, as amended at 55 FR 51384, Dec. 13, 1990; 59 FR 32341, June 23, 1994]

Subpart III—Standards of Performance for Volatile Organic Compound (VOC) Emissions From the Synthetic Organic Chemical Manufacturing Industry (SOCMI) Air Oxidation Unit Processes

SOURCE: 55 FR 26922, June 29, 1990, unless otherwise noted.

§ 60.610 Applicability and designation of affected facility.

(a) The provisions of this subpart apply to each affected facility designated in paragraph (b) of this section that produces any of the chemicals listed in § 60.617 as a product, co-product, by-product, or intermediate, except as provided in paragraph (c) of this section.

(b) The affected facility is any of the following for which construction, modification, or reconstruction commenced after October 21, 1983:

(1) Each air oxidation reactor not discharging its vent stream into a recovery system.

(2) Each combination of an air oxidation reactor and the recovery system into which its vent stream is discharged.

(3) Each combination of two or more air oxidation reactors and the common recovery system into which their vent streams are discharged.

(c) Each affected facility that has a total resource effectiveness (TRE) index value greater than 4.0 is exempt from all provisions of this subpart except for §§ 60.612, 60.614(f), 60.615(h), and 60.615(l).

NOTE: The intent of these standards is to minimize the emissions of VOC through the application of BDT. The numerical emission limits in these standards are expressed in terms of total organic compounds (TOC), measured as TOC minus methane and ethane. This emission limit reflects the performance of BDT.

§ 60.611 Definitions.

As used in this subpart, all terms not defined here shall have the meaning given them in the Act and in subpart A of part 60, and the following terms

shall have the specific meanings given them.

Air Oxidation Reactor means any device or process vessel in which one or more organic reactants are combined with air, or a combination of air and oxygen, to produce one or more organic compounds. Ammoxidation and oxychlorination reactions are included in this definition.

Air Oxidation Reactor Recovery Train means an individual recovery system receiving the vent stream from at least one air oxidation reactor, along with all air oxidation reactors feeding vent streams into this system.

Air Oxidation Unit Process means a unit process, including ammoxidation and oxychlorination unit process, that uses air, or a combination of air and oxygen, as an oxygen source in combination with one or more organic reactants to produce one or more organic compounds.

Boilers means any enclosed combustion device that extracts useful energy in the form of steam.

By Compound means by individual stream components, not carbon equivalents.

Continuous recorder means a data recording device recording an instantaneous data value at least once every 15 minutes.

Flame zone means the portion of the combustion chamber in a boiler occupied by the flame envelope.

Flow indicator means a device which indicates whether gas flow is present in a vent stream.

Halogenated Vent Stream means any vent stream determined to have a total concentration (by volume) of compounds containing halogens of 20 ppmv (by compound) or greater.

Incinerator means any enclosed combustion device that is used for destroying organic compounds and does not extract energy in the form of steam or process heat.

Process Heater means a device that transfers heat liberated by burning fuel to fluids contained in tubes, including all fluids except water that is heated to produce steam.

Process Unit means equipment assembled and connected by pipes or ducts to produce, as intermediates or final products, one or more of the chemicals in §60.617. A process unit can operate independently if supplied with sufficient fuel or raw materials and sufficient product storage facilities.

Product means any compound or chemical listed in §60.617 that is produced for sale as a final product as that chemical or is produced for use in a process that needs that chemical for the production of other chemicals in another facility. By-products, co-products, and intermediates are considered to be products.

Recovery Device means an individual unit of equipment, such as an absorber, condenser, and carbon adsorber, capable of and used to recover chemicals for use, reuse or sale.

Recovery System means an individual recovery device or series of such devices applied to the same process stream.

Total organic compounds (TOC) means those compounds measured according to the procedures in §60.614(b)(4). For the purposes of measuring molar composition as required in §60.614(d)(2)(i), hourly emissions rate as required in §60.614(d)(5) and §60.614(e) and TOC concentration as required in §60.615(b)(4) and §60.615(g)(4), those compounds which the Administrator has determined do not contribute appreciably to the formation of ozone are to be excluded. The compounds to be excluded are identified in Environmental Protection Agency's statements on ozone abatement policy for SIP revisions (42 FR 35314; 44 FR 32042; 45 FR 32424; 45 FR 48942).

Total resource effectiveness (TRE) Index Value means a measure of the supplemental total resource requirement per unit reduction of TOC associated with an individual air oxidation vent stream, based on vent stream flow rate, emission rate of TOC, net heating value, and corrosion properties (whether or not the vent stream is halogenated), as quantified by the equation given under §60.614(e).

Vent Stream means any gas stream, containing nitrogen which was introduced as air to the air oxidation reactor, released to the atmosphere directly from any air oxidation reactor

recovery train or indirectly, after diversion through other process equipment. The vent stream excludes equipment leaks and relief valve discharges including, but not limited to, pumps, compressors, and valves.

[55 FR 26922, June 29, 1990; 55 FR 36932, Sept. 7, 1990]

§ 60.612 Standards.

Each owner or operator of any affected facility shall comply with paragraph (a), (b), or (c) of this section for each vent stream on and after the date on which the initial performance test required by §§ 60.8 and 60.614 is completed, but not later than 60 days after achieving the maximum production rate at which the affected facility will be operated, or 180 days after the initial start-up, whichever date comes first. Each owner or operator shall either:

(a) Reduce emissions of TOC (minus methane and ethane) by 98 weight-percent, or to a TOC (minus methane and ethane) concentration of 20 ppmv on a dry basis corrected to 3 percent oxygen, whichever is less stringent. If a boiler or process heater is used to comply with this paragraph, then the vent stream shall be introduced into the flame zone of the boiler or process heater; or

(b) Combust the emissions in a flare that meets the requirements of § 60.18; or

(c) Maintain a TRE index value greater than 1.0 without use of VOC emission control devices.

§ 60.613 Monitoring of emissions and operations.

(a) The owner or operator of an affected facility that uses an incinerator to seek to comply with the TOC emission limit specified under § 60.612(a) shall install, calibrate, maintain, and operate according to manufacturer's specifications the following equipment:

(1) A temperature monitoring device equipped with a continuous recorder and having an accuracy of ±1 percent of the temperature being monitored expressed in degrees Celsius or ±0.5 °C, whichever is greater.

(i) Where an incinerator other than a catalytic incinerator is used, a temperature monitoring device shall be installed in the firebox.

(ii) Where a catalytic incinerator is used, temperature monitoring devices shall be installed in the gas stream immediately before and after the catalyst bed.

(2) A flow indicator that provides a record of vent stream flow to the incinerator at least once every hour for each affected facility. The flow indicator shall be installed in the vent stream from each affected facility at a point closest to the inlet of each incinerator and before being joined with any other vent stream.

(b) The owner or operator of an affected facility that uses a flare to seek to comply with § 60.612(b) shall install, calibrate, maintain, and operate according to manufacturer's specifications the following equipment:

(1) A heat sensing device, such as an ultra-violet sensor or thermocouple, at the pilot light to indicate the continuous presence of a flame.

(2) A flow indicator that provides a record of vent stream flow to the flare at least once every hour for each affected facility. The flow indicator shall be installed in the vent stream from each affected facility at a point closest to the flare and before being joined with any other vent stream.

(c) The owner or operator of an affected facility that uses a boiler or process heater to seek to comply with § 60.612(a) shall install, calibrate, maintain and operate according to the manufacturer's specifications in the following equipment:

(1) A flow indicator that provides a record of vent stream flow to the boiler or process heater at least once every hour for each affected facility. The flow indicator shall be installed in the vent stream from each air oxidation reactor within an affected facility at a point closest to the inlet of each boiler or process heater and before being joined with any other vent stream.

(2) A temperature monitoring device in the firebox equipped with a continuous recorder and having an accuracy of ±1 percent of the temperature being measured expressed in degrees Celsius or ±0.5 °C, whichever is greater, for boilers or process heaters of less than

44 MW (150 million Btu/hr) heat input design capacity.

(3) Monitor and record the periods of operation of the boiler or process heater if the design input capacity of the boiler is 44 MW (150 million Btu/hr) or greater. The records must be readily available for inspection.

(d) The owner or operator of an affected facility that seeks to demonstrate compliance with the TRE index value limit specified under §60.612(c) shall install, calibrate, maintain, and operate according to manufacturer's specifications the following equipment, unless alternative monitoring procedures or requirements are approved for that facility by the Administrator:

(1) Where an absorber is the final recovery device in a recovery system:

(i) A scrubbing liquid temperature monitoring device having an accuracy of ±1 percent of the temperature being monitored expressed in degrees Celsius or 0.5 °C, whichever is greater, and a specific gravity monitoring device having an accuracy of 0.02 specific gravity units, each equipped with a continuous recorder;

(ii) An organic monitoring device used to indicate the concentration level of organic compounds exiting the recovery device based on a detection principle such as infra-red, photoionization, or thermal conductivity, each equipped with a continuous recorder.

(2) Where a condenser is the final recovery device in a recovery system:

(i) A condenser exit (product side) temperature monitoring device equipped with a continuous recorder and having an acuracy of ±1 percent of the temperature being monitored expressed in degrees Celsius or 0.5 °C, whichever is greater;

(ii) An organic monitoring device used to indicate the concentration level of organic compounds exiting the recovery device based on a detection principle such as infra-red, photoionization, or thermal conductivity, each equipped with a continuous recorder.

(3) Where a carbon adsorber is the final recovery device in a recovery system:

(i) An integrating steam flow monitoring device having an accuracy of 10 percent, and a carbon bed temperature monitoring device having an accuracy of ±1 percent of the temperature being monitored expressed in degrees Celsius or ±0.5 °C, whichever is greater, both equipped with a continuous recorder;

(ii) An organic monitoring device used to indicate the concentration level of organic compounds exiting the recovery device based on a detection principle such as infra-red, photoionization, or thermal conductivity, each equipped with a continuous recorder.

(e) An owner or operator of an affected facility seeking to demonstrate compliance with the standards specified under §60.612 with control devices other than an incinerator, boiler, process heater, or flare; or recovery devices other than an absorber, condenser, or carbon adsorber shall provide to the Administrator information describing the operation of the control device or recovery device and the process parameter(s) which would indicate proper operation and maintenance of the device. The Administrator may request further information and will specify appropriate monitoring procedures or requirements.

§60.614 Test methods and procedures.

(a) For the purpose of demonstrating compliance with §60.612, all affected facilities shall be run at full operating conditions and flow rates during any performance test.

(b) The following methods in appendix A to this part, except as provided under §60.8(b) shall be used as reference methods to determine compliance with the emission limit or percent reduction efficiency specified under §60.612(a).

(1) Method 1 or 1A, as appropriate, for selection of the sampling sites. The control device inlet sampling site for determination of vent stream molar composition or TOC (less methane and ethane) reduction efficiency shall be prior to the inlet of the control device and after the recovery system.

(2) Method 2, 2A, 2C, or 2D, as appropriate, for determination of the volumetric flow rates.

(3) The emission rate correction factor, integrated sampling and analysis procedure of Method 3 shall be used to determine the oxygen concentration ($\%O_{2d}$) for the purposes of determining compliance with the 20 ppmv limit.

The sampling site shall be the same as that of the TOC samples and the samples shall be taken during the same time that the TOC samples are taken. The TOC concentration corrected to 3 percent O_2 (C_c) shall be computed using the following equation:

$$C_c = C_{TOC} \frac{17.9}{20.9 - \%O_{2d}}$$

where:

C_c=Concentration of TOC corrected to 3 percent 0_2, dry basis, ppm by volume.
C_{TOC}=Concentration of TOC (minus methane and ethane), dry basis, ppm by volume.
$\%O_{2d}$=Concentration of O_2, dry basis, percent by volume.

(4) Method 18 to determine concentration of TOC in the control device outlet and the concentration of TOC in the inlet when the reduction efficiency of the control device is to be determined.

(i) The sampling time for each run shall be 1 hour in which either an integrated sample or four grab samples shall be taken. If grab sampling is used then the samples shall be taken at 15-minute intervals.

(ii) The emission reduction (R) of TOC (minus methane and ethane) shall be determined using the following equation:

$$R = \frac{E_i - E_o}{E_i} \times 100$$

where:

R=Emission reduction, percent by weight.
E_i=Mass rate of TOC entering the control device, kg TOC/hr.
E_o=Mass rate of TOC discharged to the atmosphere, kg TOC/hr.

(iii) The mass rates of TOC (E_i, E_o) shall be computed using the following equations:

$$E_i = K_2 \left(\sum_{j=1}^{n} C_{ij} M_{ij} \right) Q_i$$

$$E_o = K_2 \left(\sum_{j=1}^{n} C_{oj} M_{oj} \right) Q_o$$

Where:

C_{ij}, C_{oj}=Concentration of sample component ''j'' of the gas stream at the inlet and outlet of the control device, respectively, dry basis ppm by volume.
M_{ij}, M_{oj}=Molecular weight of sample component ''j'' of the gas stream at the inlet and outlet of the control device, respectively, g/g-mole (lb/lb-mole).
Q_i, Q_o=Flow rate of gas stream at the inlet and outlet of the control device, respectively, dscm/min (dscf/hr).
K_2=Constant, 2.494 x 10^{-6} (1/ppm) (g-mole/scm) (kg/g) (min/hr), where standard temperature for (g-mole/scm) is 20 °C.

(iv) The TOC concentration (C_{TOC}) is the sum of the individual components and shall be computed for each run using the following equation:

$$C_{TOC} = \sum_{j=1}^{n} C_j$$

where:

C_{TOC}=Concentration of TOC (minus methane and ethane), dry basis, ppm by volume.
C_j=Concentration of sample components in the sample.
n=Number of components in the sample.

(5) When a boiler or process heater with a design heat input capacity of 44 MW (150 million Btu/hour) or greater is used to seek to comply with §60.612(a), the requirement for an initial performance test is waived, in accordance with §60.8(b). However, the Administrator reserves the option to require testing at such other times as may be required, as provided for in section 114 of the Act.

(c) When a flare is used to seek to comply with §60.612(b), the flare shall comply with the requirements of §60.18.

(d) The following test methods in appendix A to this part, except as provided under §60.8(b), shall be used for determining the net heating value of the gas combusted to determine compliance under §60.612(b) and for determining the process vent stream TRE index value to determine compliance under §60.612(c).

(1)(i) Method 1 or 1A, as appropriate, for selection of the sampling site. The sampling site for the vent stream flow rate and molar composition determination prescribed in §60.614(d) (2) and (3) shall be, except for the situations outlined in paragraph (d)(1)(ii) of this section, prior to the inlet of any control device, prior to any post-reactor dilution of the stream with air, and prior

to any post-reactor introduction of halogenated compounds into the vent stream. No transverse site selection method is needed for vents smaller than 4 inches in diameter.

(ii) If any gas stream other than the air oxidation vent stream from the affected facility is normally conducted through the final recovery device.

(A) The sampling site for vent stream flow rate and molar composition shall be prior to the final recovery device and prior to the point at which the nonair oxidation stream is introduced.

(B) The efficiency of the final recovery device is determined by measuring the TOC concentration using Method 18 at the inlet to the final recovery device after the introduction of any nonair oxidation vent stream and at the outlet of the final recovery device.

(C) This efficiency is applied to the TOC concentration measured prior to the final recovery device and prior to the introduction of the nonair oxidation stream to determine the concentration of TOC in the air oxidation stream from the final recovery device. This concentration of TOC is then used to perform the calculations outlined in §60.614(d) (4) and (5).

(2) The molar composition of the process vent stream shall be determined as follows:

(i) Method 18 to measure the concentration of TOC including those containing halogens.

(ii) ASTM D1946–77 (incorporation by reference as specified in §60.17 of this part) to measure the concentration of carbon monoxide and hydrogen.

(iii) Method 4 to measure the content of water vapor.

(3) The volumetric flow rate shall be determined using Method 2, 2A, 2C, or 2D, as appropriate.

(4) The net heating value of the vent stream shall be calculated using the following equation:

$$H_T = K_1\left(\sum_{j=1}^{n} C_j H_j\right)$$

where:

H_T=Net heating value of the sample, MJ/scm, where the net enthalpy per mole of offgas is based on combustion at 25 °C and 760 mm Hg, but the standard temperature for determining the volume corresponding to one mole is 20 °C, as in the definition of Q_s (offgas flow rate).

K_1=Constant, 1.740×10^{-7}

$$\frac{(1)}{\text{ppm}}\ \frac{(\text{g mole})}{\text{scm}}\ \frac{(\text{MJ}),}{\text{kcal}}$$

where standard temperature for

$$\frac{(\text{g–mole})}{\text{scm}}$$

is 20 °C.

C_j=Concentration of compound j in ppm, as measured for organics by Method 18 and measured for hydrogen and carbon monoxide by ASTM D1946–77 (incorporated by reference as specified in §60.17 of this part) as indicated in §60.614(d)(2).

H_j=Net heat of combustion j, kcal/g-mole, based on combustion at 25 °C and 760 mm Hg. The heats of combustion of vent stream components would be required to be determined using ASTM D2382–76 (incorporation by reference as specified in §60.17 of this part) if published values are not available or cannot be calculated.

(5) The emission rate of TOC in the process vent stream shall be calculated using the following equation:

$$E_{TOC} = K_2\left[\sum_{j=1}^{n} C_j M_j\right] Q_s$$

where:

E_{TOC}=Emission rate of TOC in the sample, kg/hr

K_2=Constant, 2.494×10^{-6} (1/ppm) (g-mole/scm) (kg/g) (min/hr), where standard temperature for (g-mole/scm) is 20 °C

C_j=Concentration on a basis of compound j in ppm as measured by Method 18 as indicated in §60.614(d)(2)

M_j=Molecular weight of sample j, g/g-mole

Q_s=Vent stream flow rate (scm/min) at a standard temperature of 20 °C

(6) The total process vent stream concentration (by volume) of compounds containing halogens (ppmv, by compound) shall be summed from the individual concentrations of compounds containing halogens which were measured by Method 18.

(e) For purposes of complying with §60.612(c), the owner or operator of a facility affected by this subpart shall calculate the TRE index value of the vent stream using the equation for incineration in paragraph (e)(1) of this section for halogenated vent streams. The owner or operator of an affected

facility with a nonhalogenated vent stream shall determine the TRE index value by calculating values using both the incinerator equation in paragraph (e)(1) of this section and the flare equation in paragraph (e)(2) of this section and selecting the lower of the two values.

(1) The TRE index value of the vent stream controlled by an incinerator shall be calculated using the following equation:

$$TRE = \frac{1}{E_{TOC}}\left[a + b(Q_s)^{0.88} + c(Q_s) + d(Q_s)(H_T) + e(Q_s)^{0.88}(H_T)^{0.88} + f(Y_s)^{0.5}\right]$$

(i) where for a vent stream flow rate (scm/min) at a standard temperature of 20 °C that is greater than or equal to 14.2 scm/min:

TRE=TRE index value.

Q_s=Vent stream flow rate (scm/min), at a standard temperature of 20 °C.

H_T=Vent stream net heating value (MJ/scm), where the net enthalpy of combustion per mole of vent stream is based on combustion at 25 °C and 760 mm Hg, but the standard temperature for determining the volume corresponding to one mole is 20 °C, as in the definition of Q_s.

Y_s=Q_s for all vent stream categories listed in Table 1 except for Category E vent streams where $Y_s=(Q_s)(H_T)/3.6$.

E_{TOC}=Hourly emissions of TOC reported in kg/hr.

a, b, c, d, e, and f are coefficients.

The set of coefficients which apply to a vent stream shall be obtained from Table 1.

TABLE 1. AIR OXIDATION NSPS TRE COEFFICIENTS FOR VENT STREAMS CONTROLLED BY AN INCINERATOR

DESIGN CATEGORY A1. FOR HALOGENATED PROCESS VENT STREAMS, IF 0 ≤ NET HEATING VALUE (MJ/scm) ≤ 3.5:

Q_S = Vent Stream Flow rate (scm/min)	a	b	c	d	e	f
$14.2 \leq Q_S \leq 18.8$	19.18370	0.27580	0.75762	-0.13064	0	0.01025
$18.8 < Q_S \leq 699$	20.00563	0.27580	0.30387	-0.13064	0	0.01025
$699 < Q_S \leq 1400$	39.87022	0.29973	0.30387	-0.13064	0	0.01449
$1400 < Q_S \leq 2100$	59.73481	0.31467	0.30387	-0.13064	0	0.01775
$2100 < Q_S \leq 2800$	79.59941	0.32572	0.30387	-0.13064	0	0.02049
$2800 < Q_S \leq 3500$	99.46400	0.33456	0.30387	-0.13064	0	0.02291

DESIGN CATEGORY A2. FOR HALOGENATED PROCESS VENT STREAMS, IF NET HEATING VALUE > 3.5 MJ/scm:

Q_S = Vent Stream Flow rate (scm/min)	a	b	c	d	e	f
$14.2 \leq Q_S \leq 18.8$	18.84466	0.26742	-0.20044	0	0	0.01025
$18.8 < Q_S \leq 699$	19.66658	0.26742	-0.25332	0	0	0.01025
$699 < Q_S \leq 1400$	39.19213	0.29062	-0.25332	0	0	0.01449
$1400 < Q_S \leq 2100$	58.71768	0.30511	-0.25332	0	0	0.01775
$2800 < Q_S \leq 3500$	78.24323	0.31582	-0.25332	0	0	0.02049
	97.76879	0.32439	-0.25332	0	0	0.02291

DESIGN CATEGORY B. FOR NONHALOGENATED PROCESS VENT STREAMS, IF 0 ≤ NET HEATING VALUE (MJ/scm) ≤ 0.48:

Q_S = Vent Stream Flow rate (scm/min)	a	b	c	d	e	f
$14.2 \leq Q_S \leq 1340$	8.54245	0.10555	0.09030	-0.17109	0	0.01025
$1340 < Q_S \leq 2690$	16.94386	0.11470	0.09030	-0.17109	0	0.01449
$2690 < Q_S \leq 4040$	25.34528	0.12042	0.09030	-0.17109	0	0.01775

DESIGN CATEGORY C. FOR NONHALOGENATED PROCESS VENT STREAMS, IF 0.48 < NET HEATING VALUE (MJ/scm) ≤ 1.9:

Q_S = Vent Stream Flow rate (scm/min)	a	b	c	d	e	f
$14.2 \leq Q_S \leq 1340$	9.25233	0.06105	0.31937	-0.16181	0	0.01025
$1340 < Q_S \leq 2690$	18.36363	0.06635	0.31937	-0.16181	0	0.01449
$2690 < Q_S \leq 4040$	27.47492	0.06965	0.31937	-0.16181	0	0.01775

DESIGN CATEGORY D. FOR NONHALOGENATED PROCESS VENT STREAMS, IF 1.9 < NET HEATING VALUE (MJ/scm) ≤ 3.6:

Q_S = Vent Stream Flow rate (scm/min)	a	b	c	d	e	f
$14.2 \leq Q_S \leq 1180$	6.67868	0.06943	0.02582	0	0	0.01025
$1180 < Q_S \leq 2370$	13.21633	0.07546	0.02582	0	0	0.01449
$2370 < Q_S \leq 3550$	19.75398	0.07922	0.02582	0	0	0.01775

DESIGN CATEGORY E. FOR NONHALOGENATED PROCESS VENT STREAMS, IF NET HEATING VALUE > 3.6 MJ/scm:

Y_S = Dilution Flow rate (scm/min) = $(Q_S)(H_T)/3.6$	a	b	c	d	e	f
$14.2 \leq Y_S \leq 1180$	6.67868	0	0	-0.00707	0.02220	0.01025
$1180 < Y_S \leq 2370$	13.21633	0	0	-0.00707	0.02412	0.01449
$2370 < Y_S \leq 3550$	19.75398	0	0	-0.00707	0.02533	0.01775

(ii) Where for a vent stream flow rate (scm/min) at a standard temperature of 20 °C that is less than 14.2 scm/min:

TRE=TRE index value.

Q_s=14.2 scm/min.

H_T=(FLOW)(HVAL)/14.2.

Where the following inputs are used:

FLOW=Vent stream flow rate (scm/min), at a standard temperature of 20 °C.

HVAL=Vent stream net heating value (MJ/scm), where the net enthalpy per mole of vent stream is based on combustion at 25 °C and 760 mm Hg, but the standard temperature for determining the volume corresponding to 1 mole is 20 °C as in the definition of Q_s.

Y_s=14.2 scm/min for all vent stream categories listed in Table 1 except for Category E vent streams, where $Y_s=(14.2)(H_T)/3.6$.

E_{TOC}=Hourly emissions of TOC reported in kg/hr.

a, b, c, d, e, and f are coefficients.

The set of coefficients that apply to a vent stream can be obtained from Table 1.

(2) The equation for calculating the TRE index value of a vent stream controlled by a flare is as follows:

$$TRE = \frac{1}{E_{TOC}}\left[a(Q_s) + b(Q_s)^{0.8} + c(Q_s)(H_T) + d(E_{TOC}) + e\right]$$

where:

TRE=TRE index value.

E_{TOC}=Hourly emission rate of TOC reported in kg/hr.

Q_s=Vent stream flow rate (scm/min) at a standard temperature of 20 °C.

H_T=Vent stream net heating value (MJ/scm) where the net enthalpy per mole of offgas is based on combustion at 25 °C and 760 mm Hg, but the standard temperature for determining the volume corresponding to 1 mole is 20 °C as in the definition of Q_s.

a, b, c, d, and e are coefficients.

The set of coefficients that apply to a vent stream shall be obtained from Table 2.

TABLE 2—AIR OXIDATION PROCESSES NSPS TRE COEFFICIENTS FOR VENT STREAMS CONTROLLED BY A FLARE

	a	b	c	d	e
H_T <11.2 MJ/scm	2.25	0.288	−0.193	−0.0051	2.08
H_T ≥11.2 MJ/scm	0.309	0.0619	−0.0043	−0.0034	2.08

(f) Each owner or operator of an affected facility seeking to comply with § 60.610(c) or § 60.612(c) shall recalculate the TRE index value for that affected facility whenever process changes are made. Some examples of process changes are changes in production capacity, feedstock type, or catalyst type, or whenever there is replacement, removal, or addition of recovery equipment. The TRE index value shall be recalculated based on test data, or on best engineering estimates of the effects of the change to the recovery system.

(1) Where the recalculated TRE index value is less than or equal to 1.0, the owner or operator shall notify the Administrator within 1 week of the recalculation and shall conduct a performance test according to the methods and procedures required by § 60.614 to determine compliance with § 60.612(a). Performance tests must be conducted as soon as possible after the process change but no later than 180 days from the time of the process change.

(2) Where the initial TRE index value is greater than 4.0 and the recalculated TRE index value is less than or equal to 4.0, but greater than 1.0, the owner or operator shall conduct a performance test in accordance with § 60.8 and § 60.614 and shall comply with §§ 60.613, 60.614, and 60.615. Performance tests must be conducted as soon as possible after the process change but no later than 180 days from the time of the process change.

[55 FR 26922, June 29, 1990; 55 FR 36932, Sept. 7, 1990]

§ 60.615 Reporting and recordkeeping requirements.

(a) Each owner or operator subject to § 60.612 shall notify the Administrator of the specific provisions of § 60.612 (§ 60.612 (a) (b), or (c)) with which the

owner or operator has elected to comply. Notification shall be submitted with the notification of initial start-up required by §60.7(a)(3). If an owner or operator elects at a later date to use an alternative provision of §60.612 with which he or she will comply, then the Administrator shall be notified by the owner or operator 90 days before implementing a change and, upon implementing the change, a performance test shall be performed as specified by §60.614 within 180 days.

(b) Each owner or operator subject to the provisions of this subpart shall keep up-to-date, readily accessible records of the following data measured during each performance test, and also include the following data in the report of the initial performance test required under §60.8. Where a boiler or process heater with a design heat input capacity of 44 MW (150 million Btu/hour) or greater is used to comply with §60.612(a), a report containing performance test data need not be submitted, but a report containing the information of §60.615(b)(2)(i) is required. The same data specified in this section shall be submitted in the reports of all subsequently required performance tests where either the emission control efficiency of a control device, outlet concentration of TOC, or the TRE index value of a vent stream from a recovery system is determined.

(1) Where an owner or operator subject to this subpart seeks to demonstrate compliance with §60.612(a) through use of either a thermal or catalytic incinerator:

(i) The average firebox temperature of the incinerator (or the average temperature upstream and downstream of the catalyst bed for a catalytic incinerator), measured at least every 15 minutes and averaged over the same time period of the performance testing, and

(ii) The percent reduction of TOC determined as specified in §60.614(b) achieved by the incinerator, or the concentration of TOC (ppmv, by compound) determined as specified in §60.614(b) at the outlet of the control device on a dry basis corrected to 3 percent oxygen.

(2) Where an owner or operator subject to the provisions of this subpart seeks to demonstrate compliance with §60.612(a) through use of a boiler or process heater:

(i) A description of the location at which the vent stream is introduced into the boiler or process heater, and

(ii) The average combustion temperature of the boiler or process heater with a design heat input capacity of less than 44 MW (150 million Btu/hr) measured at least every 15 minutes and averaged over the same time period of the performance testing.

(3) Where an owner or operator subject to the provisions of this subpart seeks to comply with §60.612(b) through the use of a smokeless flare, flare design (i.e., steam-assisted, air-assisted, or nonassisted), all visible emission readings, heat content determinations, flow rate measurements, and exit velocity determinations made during the performance test, continuous records of the flare pilot flame monitoring, and records of all periods of operations during which the pilot flame is absent.

(4) Where an owner or operator seeks to demonstrate compliance with §60.612(c):

(i) Where an absorber is the final recovery device in a recovery system, the exit specific gravity (or alternative parameter which is a measure of the degree of absorbing liquid saturation, if approved by the Administrator), and average exit temperature of the absorbing liquid, measured at least every 15 minutes and averaged over the same time period of the performance testing (both measured while the vent stream is normally routed and constituted), or

(ii) Where a condenser is the final recovery device in a recovery system, the average exit (product side) temperature, measured at least every 15 minutes and average over the same time period of the performance testing while the vent stream is normally routed and constituted.

(iii) Where a carbon adsorber is the final recovery device in a recovery system, the total steam mass flow measured at least every 15 minutes and averaged over the same time period of the performance test (full carbon bed cycle), temperature of the carbon bed after regeneration (and within 15 minutes of completion of any cooling cycle(s), and duration of the carbon bed steaming cycle (all measured while the

vent stream is normally routed and constituted), or

(iv) As an alternative to § 60.615(b)(4)(i), (ii) or (iii), the concentration level or reading indicated by the organic monitoring device at the outlet of the absorber, condenser, or carbon adsorber measured at least every 15 minutes and averaged over the same time period of the performance testing while the vent stream is normally routed and constituted.

(v) All measurements and calculations performed to determine the TRE index value of the vent stream.

(c) Each owner or operator subject to the provisions of this subpart shall keep up-to-date, readily accessible continuous records of the equipment operating parameters specified to be monitored under § 60.613(a) and (c) as well as up-to-date, readily accessible records of periods of operation during which the parameter boundaries established during the most recent performance test are exceeded. The Administrator may at any time require a report of these data. Where a combustion device is used by an owner or operator seeking to demonstrate compliance with § 60.612(a) or (c), periods of operation during which the parameter boundaries established during the most recent performance tests are exceeded are defined as follows:

(1) For thermal incinerators, all 3-hour periods of operation during which the average combustion temperature was more than 28 °C (50 °F) below the average combustion temperature during the most recent performance test at which compliance with § 60.612(a) was determined.

(2) For catalytic incinerators, all 3-hour periods of operation during which the average temperature of the vent stream immediately before the catalyst bed is more than 28 °C (50 °F) below the average temperature of the vent stream during the most recent performance test at which compliance with § 60.612(a) was determined. The owner or operator also shall record all 3-hour periods of operation during which the average temperature difference across the catalyst bed is less than 80 percent of the average temperature difference of the device during the most recent performance test at which compliance with § 60.612(a) was determined.

(3) All 3-hour periods of operation during which the average combustion temperature was more than 28 °C (50 °F) below the average combustion temperature during the most recent performance test at which compliance with § 60.612(a) was determined for boilers or process heaters with a design heat input capacity of less than 44 MW (150 million Btu/hr).

(4) For boilers or process heaters, whenever there is a change in the location at which the vent stream is introduced into the flame zone as required under § 60.612(a).

(d) Each owner or operator subject to the provisions of this subpart shall keep up-to-date, readily accessible continuous records of the flow indication specified under § 60.613(a)(2), § 60.613(b)(2), and § 60.613(c)(1), as well as up-to-date, readily accessible records of all periods when the vent stream is diverted from the control device or has no flow rate.

(e) Each owner or operator subject to the provisions of this subpart who uses a boiler or process heater with a design heat input capacity of 44 MW or greater to comply with § 60.612(a) shall keep an up-to-date, readily accessible record of all periods of operation of the boiler or process heater. (Examples of such records could include records of steam use, fuel use, or monitoring data collected pursuant to other State or Federal regulatory requirements).

(f) Each owner or operator subject to the provisions of this subpart shall keep up-to-date, readily accessible continuous records of the flare pilot flame monitoring specified in § 60.613(b), as well as up-to-date, readily accessible records of all periods of operations in which the pilot flame is absent.

(g) Each owner or operator subject to the provisions of this subpart shall keep up-to-date, readily accessible continuous records of the equipment operating parameters specified to be monitored under § 60.613(c) as well as up-to-date, readily accessible records of periods of operation during which the parameter boundaries established during the most recent performance test are exceeded. The Administrator may at any time require a report of these data.

Where the owner or operator seeks to demonstrate compliance with §60.612(c), periods of operation during which the parameter boundaries established during the most recent performance tests are exceeded are defined as follows:

(1) Where an absorber is the final recovery device in a recovery system, and where an organic monitoring device is not used:

(i) All 3-hour periods of operation during which the average absorbing liquid temperature was more than 11 °C (20 °F) above the average absorbing liquid temperature during the most recent performance test, or

(ii) All 3-hour periods of operation during which the average absorbing liquid specific gravity was more than 0.1 unit above, or more than 0.1 unit below, the average absorbing liquid specific gravity during the most recent performance test (unless monitoring of an alternative parameter, which is a measure of the degree of absorbing liquid saturation, is approved by the Administrator, in which case he or she will define appropriate parameter boundaries and periods of operation during which they are exceeded).

(2) When a condenser is the final recovery device in a recovery system, and where an organic monitoring device is not used, all 3-hour periods of operation during which the average exit (product side) condenser operating temperature was more than 6 °C (11 °F) above the average exit (product side) operating temperature during the most recent performance test.

(3) Where a carbon adsorber is the final recovery device in a recovery system and where an organic monitoring device is not used:

(i) All carbon bed regeneration cycles during which the total mass steam flow was more than 10 percent below the total mass steam flow during the most recent performance test, or

(ii) All carbon bed regeneration cycles during which the temperature of the carbon bed after regeneration (and after completion of any cooling cycle(s)) was more than 10 percent greater than the carbon bed temperature (in degrees Celsius) during the most recent performance test.

(4) Where an absorber, condenser, or carbon adsorber is the final recovery device in the recovery system and an organic monitoring device approved by the Administrator is used, all 3-hour periods of operation during which the average concentration level or reading of organic compounds in the exhaust gases is more than 20 percent greater than the exhaust gas organic compound concentration level or reading measured by the monitoring device during the most recent performance test.

(h) Each owner or operator subject to the provisions of this subpart and seeking to demonstrate compliance with §60.612(c) shall keep up-to-date, readily accessible records of:

(1) Any changes in production capacity, feedstock type, or catalyst type, or of any replacement, removal or addition of recovery equipment or air oxidation reactors;

(2) Any recalculation of the TRE index value performed pursuant to §60.614(f);

(3) The results of any performance test performed pursuant to the methods and procedures required by §60.614(d).

(i) Each owner and operator subject to the provisions of this subpart is exempt from the quarterly reporting requirements contained in §60.7(c) of the General Provisions.

(j) Each owner or operator that seeks to comply with the requirements of this subpart by complying with the requirements of §60.612 shall submit to the Administrator semiannual reports of the following information. The initial report shall be submitted within 6 months after the initial start-up-date.

(1) Exceedances of monitored parameters recorded under §60.615(c) and (g).

(2) All periods recorded under §60.615(d) when the vent stream is diverted from the control device or has no flow rate.

(3) All periods recorded under §60.615(e) when the boiler or process heater was not operating.

(4) All periods recorded under §60.615(f) in which the pilot flame of the flare was absent.

(5) Any recalculation of the TRE index value, as recorded under §60.615(h).

(k) The requirements of §60.615(j) remain in force until and unless EPA, in delegating enforcement authority to a State under section 111(c) of the Act, approves reporting requirements or an alternative means of compliance surveillance adopted by such State. In that event, affected sources within the State will be relieved of the obligation to comply with §60.615(j), provided that they comply with the requirements established by the State.

(l) The Administrator will specify appropriate reporting and recordkeeping requirements where the owner or operator of an affected facility seeks to demonstrate compliance with the standards specified under §60.612 other than as provided under §60.613(a), (b), (c), and (d).

[55 FR 26922, June 29, 1990; 55 FR 36932, Sept. 7, 1990]

§60.616 Reconstruction.

For purposes of this subpart ''fixed capital cost of the new components,'' as used in §60.15, includes the fixed capital cost of all depreciable components which are or will be replaced pursuant to all continuous programs of component replacement which are commenced within any 2-year period following October 21, 1983. For purposes of this paragraph, ''commenced'' means that an owner or operator has undertaken a continuous program of component replacement or that an owner or operator has entered into a contractual obligation to undertake and complete, within a reasonable time, a continuous program of component replacement.

§60.617 Chemicals affected by subpart III.

Chemical name	CAS No.*
Acetaldehyde	75–07–0
Acetic acid	64–19–7
Acetone	67–64–1
Acetonitrile	75–05–8
Acetophenone	98–86–2
Acrolein	107–02–8
Acrylic acid	79–10–7
Acrylonitrile	107–13–1
Anthraquinone	84–65–1
Benzaldehyde	100–52–7
Benzoic acid, tech	65–85–0
1,3-Butadiene	106–99–0
p-t-Butyl benzoic acid	98–73–7
N-Butyric acid	107–92–6
Crotonic acid	3724–65–0
Cumene hydroperoxide	80–15–9
Cyclohexanol	108–93–0
Cyclohexanone	108–94–1
Dimethyl terephthalate	120–61–6
Ethylene dichloride	107–06–2
Ethylene oxide	75–21–8
Formaldehyde	50–00–0
Formic acid	64–18–6
Glyoxal	107–22–2
Hydrogen cyanide	74–90–8
Isobutyric acid	79–31–2
Isophthalic acid	121–91–5
Maleic anhydride	108–31–6
Methyl ethyl ketone	78–93–3
a-Methyl styrene	98–83–9
Phenol	108–95–2
Phthalic anhydride	85–44–9
Propionic acid	79–09–4
Propylene oxide	75–56–9
Styrene	100–42–5
Terephthalic acid	100–21–0

*CAS numbers refer to the Chemical Abstracts Registry numbers assigned to specific chemicals, isomers, or mixtures of chemicals. Some isomers or mixtures that are covered by the standards do not have CAS numbers assigned to them. The standards apply to all of the chemicals listed, whether CAS numbers have been assigned or not.

§60.618 Delegation of authority.

(a) In delegating implementation and enforcement authority to a State under section 111(c) of the Act, the authorities contained in paragraph (b) of this section shall be retained by the Administrator and not transferred to a State.

(b) Authorities which will not be delegated to States: §60.613(e).

Subpart JJJ—Standards of Performance for Petroleum Dry Cleaners

SOURCE: 49 FR 37331, Sept. 21, 1984, unless otherwise noted.

§60.620 Applicability and designation of affected facility.

(a) The provisions of this subpart are applicable to the following affected facilities located at a petroleum dry cleaning plant with a total manufacturers' rated dryer capacity equal to or greater than 38 kilograms (84 pounds): Petroleum solvent dry cleaning dryers, washers, filters, stills, and settling tanks.

(1) When the affected facility is installed in an existing plant that is not expanding the manufacturers' rated capacity of its petroleum solvent dryer(s), the total manufacturers' rated dryer capacity is the summation of the manufacturers' rated capacity

for each existing petroleum solvent dryer.

(2) When the affected facility is installed in a plant that is expanding the manufacturers' rated capacity of its petroleum solvent dryers, the total manufacturers' rated dryer capacity is the summation of the manufacturers' rated dryer capacity for each existing and proposed new petroleum solvent dryer.

(3) When the affected facilty is installed in a new plant, the total manufacturers' rated dryer capacity is the summation of the manufacturers' rated dryer capacity for each proposed new petroleum solvent dryer.

(4) The petroleum solvent dryers considered in the determination of the total manufacturers' rated dryer capacity are those new and existing dryers in the plant that will be in service at any time after the proposed new source or modification commences operation.

(b) Any facility under paragraph (a) of this section that commences construction or modification after December 14, 1982, is subject to the requirements of this subpart with the following exception. A dryer installed between December 14, 1982, and September 21, 1984, in a plant with an annual solvent consumption level of less than 4,700 gallons, is exempt from the requirements of this subpart.

[49 FR 37331, Sept. 21, 1984, as amended at 50 FR 49026, Nov. 27, 1985]

§ 60.621 Definitions.

As used in this subpart, all terms not defined herein shall have the same meaning given them in the Act and in subpart A of this part.

Cartridge filter means a discrete filter unit containing both filter paper and activated carbon that traps and removes contaminants from petroleum solvent, together with the piping and ductwork used in the installation of this device.

Dryer means a machine used to remove petroleum solvent from articles of clothing or other textile or leather goods, after washing and removing of excess petroleum solvent, together with the piping and ductwork used in the installation of this device.

Manufacturers' rated dryer capacity means the dryer's rated capacity of articles, in pounds or kilograms of clothing articles per load, dry basis, that is typically found on each dryer on the manufacturer's name-plate or in the manufacturer's equipment specifications.

Perceptible leaks means any petroleum solvent vapor or liquid leaks that are conspicuous from visual observation or that bubble after application of a soap solution, such as pools or droplets of liquid, open containers or solvent, or solvent laden waste standing open to the atmosphere.

Petroleum dry cleaner means a dry cleaning facility that uses petroleum solvent in a combination of washers, dryers, filters, stills, and settling tanks.

Settling tank means a container that gravimetrically separates oils, grease, and dirt from petroleum solvent, together with the piping and ductwork used in the installation of this device.

Solvent filter means a discrete solvent filter unit containing a porous medium that traps and removes contaminants from petroleum solvent, together with the piping and ductwork used in the installation of this device.

Solvent recovery dryer means a class of dry cleaning dryers that employs a condenser to condense and recover solvent vapors evaporated in a closed-loop stream of heated air, together with the piping and ductwork used in the installation of this device.

Still means a device used to volatilize, separate, and recover petroleum solvent from contaminated solvent, together with the piping and ductwork used in the installation of this device.

Washer means a machine which agitates fabric articles in a petroleum solvent bath and spins the articles to remove the solvent, together with the piping and ductwork used in the installation of this device.

§ 60.622 Standards for volatile organic compounds.

(a) Each affected petroleum solvent dry cleaning dryer that is installed at a petroleum dry cleaning plant after December 14, 1982, shall be a solvent recovery dryer. The solvent recovery

dryer(s) shall be properly installed, operated, and maintained.

(b) Each affected petroleum solvent filter that is installed at a petroleum dry cleaning plant after December 14, 1982, shall be a cartridge filter. Cartridge filters shall be drained in their sealed housings for at least 8 hours prior to their removal

(c) Each manufacturer of an affected petroleum solvent dryer shall include leak inspection and leak repair cycle information in the operating manual and on a clearly visible label posted on each affected facility. Such information should state:

To protect against fire hazards, loss of valuable solvents, and emissions of solvent to the atmosphere, periodic inspection of this equipment for evidence of leaks and prompt repair of any leaks is recommended. The U.S. Environmental Protection Agency recommends that the equipment be inspected every 15 days and all vapor or liquid leaks be repaired within the subsequent 15 day period.

[49 FR 37331, Sept. 21, 1984, as amended at 50 FR 49026, Nov. 27, 1985]

§ 60.623 Equivalent equipment and procedures.

(a) Upon written application from any person, the Administrator may approve the use of equipment or procedures that have been demonstrated to his satisfaction to be equivalent, in terms of reducing VOC emissions to the atmosphere, to those prescribed for compliance within a specified paragraph of this subpart. The application must contain a complete description of the equipment or procedure; the testing method; the date, time and location of the test; and a description of the test results. Written applications shall be submitted to the Administrator, U.S. Environmental Protection Agency, 401 M Street SW., Washington, DC 20460.

(b) The Administrator will make a preliminary determination of whether or not the application for equivalency is approvable and will publish a notice of these findings in the FEDERAL REGISTER. After notice and opportunity for public hearing, the Administrator will publish the final determination in the FEDERAL REGISTER.

§ 60.624 Test methods and procedures.

Each owner or operator of an affected facility subject to the provisions of § 60.622(a) shall perform an initial test to verify that the flow rate of recovered solvent from the solvent recovery dryer at the termination of the recovery cycle is no greater than 0.05 liters per minute. This test shall be conducted for a duration of no less than 2 weeks during which no less than 50 percent of the dryer loads shall be monitored for their final recovered solvent flow rate. The suggested point for measuring the flow rate of recovered solvent is from the outlet of the solvent-water separator. Near the end of the recovery cycle, the entire flow of recovered solvent should be diverted to a graduated cylinder. As the recovered solvent collects in the graduated cylinder, the elapsed time is monitored and recorded in periods of greater than or equal to 1 minute. At the same time, the volume of solvent in the graduated cylinder is monitored and recorded to determine the volume of recovered solvent that is collected during each time period. The recovered solvent flow rate is calculated by dividing the volume of solvent collected per period by the length of time elapsed during the period and converting the result with appropriate factors into units of liters per minute. The recovery cycle and the monitoring procedure should continue until the flow rate of solvent is less than or equal to 0.05 liter per minute. The type of articles cleaned and the total length of the cycle should then be recorded.

§ 60.625 Recordkeeping requirements.

Each owner or operator of an affected facility subject to the provisions of this subpart shall maintain a record of the performance test required under § 60.624.

Subpart KKK—Standards of Performance for Equipment Leaks of VOC From Onshore Natural Gas Processing Plants.

SOURCE: 50 FR 26124, June 24, 1985, unless otherwise noted.

§ 60.630 Applicability and designation of affected facility.

(a)(1) The provisions of this subpart apply to affected facilities in onshore natural gas processing plants.

(2) A compressor in VOC service or in wet gas service is an affected facility.

(3) The group of all equipment except compressors (definied in § 60.631) within a process unit is an affected facility.

(b) Any affected facility under paragraph (a) of this section that commences construction, reconstruction, or modification after January 20, 1984, is subject to the requirements of this subpart.

(c) Addition or replacement of equipment (defined in § 60.631) for the purpose of process improvement that is accomplished without a capital expenditure shall not by itself be considered a modification under this subpart.

(d) Facilities covered by subpart VV or subpart GGG of 40 CFR part 60 are excluded from this subpart.

(e) A compressor station, dehydration unit, sweetening unit, underground storage tank, field gas gathering system, or liquefied natural gas unit is covered by this subpart if it is located at an onshore natural gas processing plant. If the unit is not located at the plant site, then it is exempt from the provisions of this subpart.

§ 60.631 Definitions.

As used in this subpart, all terms not defined herein shall have the meaning given them in the Act, in subpart A or subpart VV of part 60; and the following terms shall have the specific meanings given them.

Alaskan North Slope means the approximately 69,000 square-mile area extending from the Brooks Range to the Arctic Ocean.

Equipment means each pump, pressure relief device, open-ended valve or line, valve, compressor, and flange or other connector that is in VOC service or in wet gas service, and any device or system required by this subpart.

Field gas means feedstock gas entering the natural gas processing plant.

In light liquid service means that the piece of equipment contains a liquid that meets the conditions specified in § 60.485(e) or § 60.633(h)(2).

In wet gas service means that a piece of equipment contains or contacts the field gas before the extraction step in the process.

Natural gas liquids means the hydrocarbons, such as ethane, propane, butane, and pentane, that are extracted from field gas.

Natural gas processing plant (gas plant) means any processing site engaged in the extraction of natural gas liquids from field gas, fractionation of mixed natural gas liquids to natural gas products, or both.

Nonfractionating plant means any gas plant that does not fractionate mixed natural gas liquids into natural gas products.

Onshore means all facilities except those that are located in the territorial seas or on the outer continental shelf.

Process unit means equipment assembled for the extraction of natural gas liquids from field gas, the fractionation of the liquids into natural gas products, or other operations associated with the processing of natural gas products. A process unit can operate independently if supplied with sufficient feed or raw materials and sufficient storage facilities for the products.

Reciprocating compressor means a piece of equipment that increases the pressure of a process gas by positive displacement, employing linear movement of the driveshaft.

§ 60.632 Standards.

(a) Each owner or operator subject to the provisions of this subpart shall comply with the requirements of §§ 60.482–1 (a), (b), and (d) and 60.482–2 through 60.482–10, except as provided in § 60.633, as soon as practicable, but no later than 180 days after initial startup.

(b) An owner or operator may elect to comply with the requirements of §§ 60.483–1 and 60.483–2.

(c) An owner or operator may apply to the Administrator for permission to use an alternative means of emission limitation that achieves a reduction in emissions of VOC at least equivalent to that achieved by the controls required in this subpart. In doing so, the owner or operator shall comply with requirements of § 60.634 of this subpart.

(d) Each owner or operator subject to the provisions of this subpart shall comply with the provisions of § 60.485 except as provided in § 60.633(f) of this subpart.

(e) Each owner or operator subject to the provisions of this subpart shall comply with the provisions of §§ 60.486 and 60.487 except as provided in §§ 60.633, 60.635, and 60.636 of this subpart.

(f) An owner or operator shall use the following provision instead of § 60.485(d)(1): Each piece of equipment is presumed to be in VOC service or in wet gas service unless an owner or operator demonstrates that the piece of equipment is not in VOC service or in wet gas service. For a piece of equipment to be considered not in VOC service, it must be determined that the percent VOC content can be reasonably expected never to exceed 10.0 percent by weight. For a piece of equipment to be considered in wet gas service, it must be determined that it contains or contacts the field gas before the extraction step in the process. For purposes of determining the percent VOC content of the process fluid that is contained in or contacts a piece of equipment, procedures that conform to the methods described in ASTM Methods E169, E168, or E260 (incorporated by reference as specified in § 60.17) shall be used.

§ 60.633 Exceptions.

(a) Each owner or operator subject to the provisions of this subpart may comply with the following exceptions to the provisions of subpart VV.

(b)(1) Each pressure relief device in gas/vapor service may be monitored quarterly and within 5 days after each pressure release to detect leaks by the methods specified in § 60.485(b) except as provided in § 60.632(c), paragraph (b)(4) of this section, and § 60.482–4 (a) through (c) of subpart VV.

(2) If an instrument reading of 10,000 ppm or greater is measured, a leak is detected.

(3)(i) When a leak is detected, it shall be repaired as soon as practicable, but no later than 15 calendar days after it is detected, except as provided in § 60.482–9.

(ii) A first attempt at repair shall be made no later than 5 calendar days after each leak is detected.

(4)(i) Any pressure relief device that is located in a nonfractionating plant that is monitored only by nonplant personnel may be monitored after a pressure release the next time the monitoring personnel are on site, instead of within 5 days as specified in paragraph (b)(1) of this section and § 60.482–(b)(1) of subpart VV.

(ii) No pressure relief device described in paragraph (b)(4)(i) of this section shall be allowed to operate for more than 30 days after a pressure release without monitoring.

(c) Sampling connection systems are exempt from the requirements of § 60.482–5.

(d) Pumps in light liquid service, valves in gas/vapor and light liquid service, and pressure relief devices in gas/vapor service that are located at a nonfractionating plant that does not have the design capacity to process 283,000 standard cubic meters per day (scmd) (10 million standard cubic feet per day (scfd)) or more of field gas are exempt from the routine monitoring requirements of §§ 60.482–2(a)(1) and 60.482–7(a), and paragraph (b)(1) of this section.

(e) Pumps in light liquid service, valves in gas/vapor and light liquid service, and pressure relief devices in gas/vapor service within a process unit that is located in the Alaskan North Slope are exempt from the routine monitoring requirements of §§ 60.482–2(a)(1), 60.482–7(a), and paragraph (b)(1) of this section.

(f) Reciprocating compressors in wet gas service are exempt from the compressor control requirements of § 60.482–3.

(g) Flares used to comply with this subpart shall comply with the requirements of § 60.18.

(h) An owner or operator may use the following provisions instead of § 60.485(e):

(1) Equipment is in heavy liquid service if the weight percent evaporated is 10 percent or less at 150 °C as determined by ASTM Method D86 (incorporated by reference as specified in § 60.17).

(2) Equipment is in light liquid service if the weight percent evaporated is greater than 10 percent at 150 °C as determined by ASTM Method D86 (incorporated by reference as specified in § 60.17).

[50 FR 26124, June 24, 1985, as amended at 51 FR 2702, Jan. 21, 1986]

§ 60.634 Alternative means of emission limitation.

(a) If, in the Administrator's judgment, an alternative means of emission limitation will achieve a reduction in VOC emissions at least equivalent to the reduction in VOC emissions achieved under any design, equipment, work practice or operational standard, the Administrator will publish, in the FEDERAL REGISTER a notice permitting the use of that alternative means for the purpose of compliance with that standard. The notice may condition permission on requirements related to the operation and maintenance of the alternative means.

(b) Any notice under paragraph (a) of this section shall be published only after notice and an opportunity for a public hearing.

(c) The Administrator will consider applications under this section from either owners or operators of affected facilities, or manufacturers of control equipment.

(d) The Administrator will treat applications under this section according to the following criteria, except in cases where he concludes that other criteria are appropriate:

(1) The applicant must collect, verify and submit test data, covering a period of at least 12 months, necessary to support the finding in paragraph (a) of this section.

(2) If the applicant is an owner or operator of an affected facility, he must commit in writing to operate and maintain the alternative means so as to achieve a reduction in VOC emissions at least equivalent to the reduction in VOC emissions achieved under the design, equipment, work practice or operational standard.

§ 60.635 Recordkeeping requirements.

(a) Each owner or operator subject to the provisions of this subpart shall comply with the requirements of paragraphs (b) and (c) of this section in addition to the requirements of § 60.486.

(b) The following recordkeeping requirements shall apply to pressure relief devices subject to the requirements of § 60.633(b)(1) of this subpart.

(1) When each leak is detected as specified in § 60.633(b)(2), a weatherproof and readily visible identification, marked with the equipment identification number, shall be attached to the leaking equipment. The identification on the pressure relief device may be removed after it has been repaired.

(2) When each leak is detected as specified in § 60.633(b)(2), the following information shall be recorded in a log and shall be kept for 2 years in a readily accessible location:

(i) The instrument and operator identification numbers and the equipment identification number.

(ii) The date the leak was detected and the dates of each attempt to repair the leak.

(iii) Repair methods applied in each attempt to repair the leak.

(iv) ''Above 10,000 ppm'' if the maximum instrument reading measured by the methods specified in paragraph (a) of this section after each repair attempt is 10,000 ppm or greater.

(v) ''Repair delayed'' and the reason for the delay if a leak is not repaired within 15 calendar days after discovery of the leak.

(vi) The signature of the owner or operator (or designate) whose decision it was that repair could not be effected without a process shutdown.

(vii) The expected date of successful repair of the leak if a leak is not repaired within 15 days.

(viii) Dates of process unit shutdowns that occur while the equipment is unrepaired.

(ix) The date of successful repair of the leak.

(x) A list of identification numbers for equipment that are designated for no detectable emissions under the provisions of § 60.482–4(a). The designation of equipment subject to the provisions of § 60.482–4(a) shall be signed by the owner or operator.

(c) An owner or operator shall comply with the following requirement in addition to the requirement of § 60.486(j): Information and data used to

demonstrate that a reciprocating compressor is in wet gas service to apply for the exemption in §60.633(f) shall be recorded in a log that is kept in a readily accessible location.

§60.636 Reporting requirements.

(a) Each owner or operator subject to the provisions of this subpart shall comply with the requirements of paragraphs (b) and (c) of this section in addition to the requirements of §60.487.

(b) An owner or operator shall include the following information in the initial semiannual report in addition to the information required in §60.487(b)(1)—(4): Number of pressure relief devices subject to the requirements of §60.633(b) except for those pressure relief devices designated for no detectable emissions under the provisions of §60.482–4(a) and those pressure relief devices complying with §60.482–4(c).

(c) An owner or operator shall include the following information in all semiannual reports in addition to the information required in §60.487(c)(2)(i) through (vi):

(1) Number of pressure relief devices for which leaks were detected as required in §60.633(b)(2) and

(2) Number of pressure relief devices for which leaks were not repaired as required in §60.633(b)(3).

Subpart LLL—Standards of Performance for Onshore Natural Gas Processing: SO_2 Emissions

SOURCE: 50 FR 40160, Oct. 1, 1985, unless otherwise noted.

§60.640 Applicability and designation of affected facilities.

(a) The provisions of this subpart are applicable to the following affected facilities that process natural gas: each sweetening unit, and each sweetening unit followed by a sulfur recovery unit.

(b) Facilities that have a design capacity less than 2 long tons per day (LT/D) of hydrogen sulfide (H_2S) in the acid gas (expressed as sulfur) are required to comply with §60.647(c) but are not required to comply with §§60.642 through 60.646.

(c) The provisions of this subpart are applicable to facilities located on land and include facilities located onshore which process natural gas produced from either onshore or offshore wells.

(d) The provisions of this subpart apply to each affected facility identified in paragraph (a) of this section which commences construction or modification after January 20, 1984.

(e) The provisions of this subpart do not apply to sweetening facilities producing acid gas that is completely reinjected into oil-or-gas-bearing geologic strata or that is otherwise not released to the atmosphere.

§60.641 Definitions.

All terms used in this subpart not defined below are given the meaning in the Act and in subpart A of this part.

Acid gas means a gas stream of hydrogen sulfide (H_2S) and carbon dioxide (CO_2) that has been separated from sour natural gas by a sweetening unit.

Natural gas means a naturally occurring mixture of hydrocarbon and nonhydrocarbon gases found in geologic formations beneath the earth's surface. The principal hydrocarbon constituent is methane.

Onshore means all facilities except those that are located in the territorial seas or on the outercontinental shelf.

Reduced sulfur compounds means H_2S, carbonyl sulfide (COS), and carbon disulfide (CS_2).

Sulfur production rate means the rate of liquid sulfur accumulation from the sulfur recovery unit.

Sulfur recovery unit means a process device that recovers element sulfur from acid gas.

Sweetening unit means a process device that separates the H_2S and CO_2 contents from the sour natural gas stream.

Total SO_2 equivalents means the sum of volumetric or mass concentrations of the sulfur compounds obtained by adding the quantity existing as SO_2 to the quantity of SO_2 that would be obtained if all reduced sulfur compounds were converted to SO_2 (ppmv or kg/DSCM).

E = the sulfur emission rate expressed as elemental sulfur, kilograms per hour (kg/hr) rounded to one decimal place.

R = the sulfur emission reduction efficiency achieved in percent, carried to one decimal place.

S = the sulfur production rate in kilograms per hour (kg/hr) rounded to one decimal place.

X = the sulfur feed rate, i.e., the H_2S in the acid gas (expressed as sulfur) from the sweetening unit, expressed in long tons per day (LT/D) of sulfur rounded to one decimal place.

Y = the sulfur content of the acid gas from the sweetening unit, expressed as mole percent H_2S (dry basis) rounded to one decimal place.

Z = the minimum required sulfur dioxide (SO_2) emission reduction efficiency, expressed as percent carried to one decimal place. Z_i refers to the reduction efficiency required at the initial performance test. Z_c refers to the reduction efficiency required on a continuous basis after compliance with Z_i has been demonstrated.

§ 60.642 Standards for sulfur dioxide.

(a) During the initial performance test required by § 60.8(b), each owner or operator shall achieve at a minimum, an SO_2 emission reduction efficiency (Z_i) to be determined from Table 1 based on the sulfur feed rate (X) and the sulfur content of the acid gas (Y) of the affected facility.

(b) After demonstrating compliance with the provisions of paragraph (a) of this section, the owner or operator shall achieve at a minimum, an SO_2 emission reduction efficiency (Z_c) to be determined from Table 2 based on the sulfur feed rate (X) and the sulfur content of the acid gas (Y) of the affected facility.

Table 1. REQUIRED MINIMUM INITIAL SO_2 EMISSION REDUCTION EFFICIENCY (Z_i)

H_2S content of acid gas (Y), %	Sulfur feed rate (X), LT/D			
	2.0≤X≤5.0	5.0<X≤15.0	15.0<X≤300.0	X>300.0
Y≥50	79.0	$88.51X^{0.0101}Y^{0.0125}$ or 99.8, whichever is smaller		
20≤Y<50	79.0	$88.51X^{0.0101}Y^{0.0125}$ or 97.9, whichever is smaller		97.9
10≤Y<20	79.0	$88.51X^{0.0101}Y^{0.0125}$ or 93.5, whichever is smaller	93.5	93.5
Y<10	79.0	79.0	79.0	79.0

Table 2. REQUIRED MINIMUM SO_2 EMISSION REDUCTION EFFICIENCY (Z_c)

H_2S content of acid gas (Y), %	Sulfur feed rate (X), LT/D			
	2.0≤X≤5.0	5.0<X≤15.0	15.0<X≤300.0	X>300.0
Y≥50	74.0	$85.35X^{0.0144}Y^{0.0128}$ or 99.8, whichever is smaller		
20≤Y<50	74.0	$85.35X^{0.0144}Y^{0.0128}$ or 97.5, whichever is smaller		97.5
10≤Y<20	74.0	$85.35X^{0.0144}Y^{0.0128}$ or 90.8, whichever is smaller	90.8	90.8
Y<10	74.0	74.0	74.0	74.0

§ 60.643 Compliance provisions.

(a)(1) To determine compliance with the standards for sulfur dioxide specified in § 60.642(a), during the initial performance test as required by § 60.8, the

minimum required sulfur dioxide emission reduction efficiency (Z) is compared to the emission reduction efficiency (R) achieved by the sulfur recovery technology.

(i) If $R \geqq Z_i$, the affected facility is in compliance.

(ii) If $R < Z_i$, the affected facility is not in compliance.

(2) Following the initial determination of compliance as required by § 60.8, any subsequent compliance determinations that may be required by the Administrator would compare R to Z_c.

(b) The emission reduction efficiency (R) achieved by the sulfur reduction technology shall be determined using the procedures in § 60.644(c)(1).

[50 FR 40160, Oct. 1, 1985, as amended at 54 FR 6679, Feb. 14, 1989]

§ 60.644 Test methods and procedures.

(a) In conducting the performance tests required in § 60.8, the owner or operator shall use as reference methods and procedures the test methods in appendix A of this part or other methods and procedures as specified in this section, except as provided in paragraph § 60.8(b).

(b) During a performance test required by § 60.8, the owner or operator shall determine the minimum required reduction efficiencies (Z) of SO_2 emissions as required in § 60.642 (a) and (b) as follows:

(1) The average sulfur feed rate (X) shall be computed as follows:

$$X = K\ Q_a\ Y$$

where:

X=average sulfur feed rate, long ton/day.

Q_a=average volumetric flow rate of acid gas from sweetening unit, dscf/day.

Y=average H_2S concentration in acid gas feed from sweetening unit, percent by volume.

K=(32 lb S/lb-mole)/[(100%)(385.36 dscf/lb-mole)(2240 lb/long ton)]

$=3.707\times10^{-7}$

(2) The continuous readings from the process flowmeter shall be used to determine the average volumetric flow rate (Q_a) in dscf/day of the acid gas from the sweetening unit for each run.

(3) The Tutwiler procedure in § 60.648 or a chromatographic procedure following ASTM E–260 (incorporated by reference—see § 60.17) shall be used to determine the H_2S concentration in the acid gas feed from the sweetening unit. At least one sample per hour (at equally spaced intervals) shall be taken during each 4-hour run. The arithmetic mean of all samples shall be the average H_2S concentration (Y) on a dry basis for the run. By multiplying the result from the Tutwiler procedure by 1.62×10^{-3}, the units gr/100 scf are converted to volume percent.

(4) Using the information from paragraphs (b) (1) and (3), Tables 1 and 2 shall be used to determine the required initial (Z_i) and continuous (Z_c) reduction efficiencies of SO_2 emissions.

(c) The owner or operator shall determine compliance with the SO_2 standards in § 60.642 (a) or (b) as follows:

(1) The emission reduction efficiency (R) achieved by the sulfur recovery technology shall be computed for each run using the following equation:

$$R=(100\ S)/(S+E)$$

(2) The level indicators or manual soundings shall be used to measure the liquid sulfur accumulation rate in the product storage tanks. Readings taken at the beginning and end of each run, the tank geometry, sulfur density at the storage temperature, and sample duration shall be used to determine the sulfur production rate (S) in kg/hr for each run.

(3) The emission rate (E) of sulfur shall be computed for each run as follows:

$$E=C_e\ Q_{sd}/K$$

where:

C_e=concentration of sulfur equivalent (SO_2+TRS), g/dscm.

Q_{sd}=volumetric flow rate of effluent gas, dscm/hr.

K=conversion factor, 1000 g/kg.

(4) The concentration (C_e) of sulfur equivalent shall be the sum of the SO_2 and TRS concentrations, after being converted to sulfur equivalents. For each run and each of the test methods specified in this paragraph (c) of this section, the sampling time shall be at least 4 hours. Method 1 shall be used to select the sampling site. The sampling point in the duct shall be at the centroid of the cross-section if the area is less than 5 m^2 (54 ft^2) or at a point no closer to the walls than 1 m (39 in.) if the cross-sectional area is 5 m^2 or

more, and the centroid is more than 1 m (39 in.) from the wall.

(i) Method 6 shall be used to determine the SO_2 concentration. Eight samples of 20 minutes each shall be taken at 30-minute intervals. The arithmetic average in mg/dscm shall be the concentration for the run. The concentration in mg/dscm shall be multiplied by 0.5 to convert the results to sulfur equivalent.

(ii) Method 15 shall be used to determine the TRS concentration from reduction-type devices or where the oxygen content of the effluent gas is less than 1.0 percent by volume. The sampling rate shall be at least 3 liters/min (0.1 ft^3/min) to insure minimum residence time in the sample line. Sixteen samples shall be taken at 15-minute intervals. The arithmetic average of all the samples shall be the concentration for the run. The concentration in ppm TRS as H_2S shall be multiplied by 1.352×10^{-6} to convert the results to sulfur equivalent.

(iii) Method 16A shall be used to determine the TRS concentration from oxidation-type devices or where the oxygen content of the effluent gas is greater than 1.0 percent by volume. Eight samples of 20 minutes each shall be taken at 30-minute intervals. The arithmetic average shall be the concentration for the run. The concentration in ppm TRS as H_2S shall be multiplied by 1.352×10^{-6} to convert the results to sulfur equivalent.

(iv) Method 2 shall be used to determine the volumetric flow rate of the effluent gas. A velocity traverse shall be conducted at the beginning and end of each run. The arithmetic average of the two measurements shall be used to calculate the volumetric flow rate (Q_{sd}) for the run. For the determination of the effluent gas molecular weight, a single integrated sample over the 4-hour period may be taken and analyzed or grab samples at 1-hour intervals may be taken, analyzed, and averaged. For the moisture content, two samples of at least 0.10 dscm (0.35 dscf) and 10 minutes shall be taken at the beginning of the 4-hour run and near the end of the time period. The arithmetic average of the two runs shall be the moisture content for the run.

(d) To comply with § 60.646(d), the owner or operator shall obtain the information required by using the monitoring devices in paragraph (b) of (c) of this section.

[54 FR 6679, Feb. 14, 1989]

§ 60.645 [Reserved]

§ 60.646 Monitoring of emissions and operations.

(a) The owner or operator subject to the provisions of § 60.642 (a) or (b) shall install, calibrate, maintain, and operate monitoring devices or perform measurements to determine the following operations information on a daily basis:

(1) The accumulation of sulfur product over each 24-hour period: The monitoring method may incorporate the use of an instrument to measure and record the liquid sulfur production rate, or may be a procedure for measuring and recording the sulfur liquid levels in the storage tanks with a level indicator or by manual soundings, with subsequent calculation of the sulfur production rate based on the tank geometry, stored sulfur density, and elapsed time between readings. The method shall be designed to be accurate within ±2 percent of the 24-hour sulfur accumulation.

(2) The H_2S concentration in the acid gas from the sweetening unit for each 24-hour period: At least one sample per 24-hour period shall be collected and analyzed using the method specified in § 60.644(b)(1). The Administrator may require the owner or operator to demonstrate that the H_2S concentration obtained from one or more samples over a 24-hour period is within ±20 percent of the average of 12 samples collected at equally spaced intervals during the 24-hour period. In instances where the H_2S concentration of a single sample is not within ±20 percent of the average of the 12 equally spaced samples, the Administrator may require a more frequent sampling schedule.

(3) The average acid gas flow rate from the sweetening unit: The owner or operator shall install and operate a monitoring device to continuously measure the flow rate of acid gas. The monitoring device reading shall be recorded at least once per hour during

each 24-hour period. The average acid gas flow rate shall be computed from the individual readings.

(4) The sulfur feed rate (X): For each 24-hour period, X shall be computed using the equation in § 60.644(b)(3).

(5) The required sulfur dioxide emission reduction efficiency for the 24-hour period: The sulfur feed rate and the H_2S concentration in the acid gas for the 24-hour period as applicable, shall be used to determine the required reduction efficiency in accordance with the provisions of § 60.642(b).

(b) Where compliance is achieved through the use of an oxidation control system or a reduction control system followed by a continually operated incineration device, the owner or operator shall install, calibrate, maintain, and operate monitoring devices and continuous emission monitors as follows:

(1) A continuous monitoring system to measure the total sulfur emission rate (E) of SO_2 in the gases discharged to the atmosphere. The SO_2 emission rate shall be expressed in terms of equivalent sulfur mass flow rates (kg/hr). The span of this monitoring system shall be set so that the equivalent emission limit of § 60.642(b) will be between 30 percent and 70 percent of the measurement range of the instrument system.

(2) Except as provided in paragraph (b)(3) of this section: A monitoring device to measure the temperature of the gas leaving the combustion zone of the incinerator, if compliance with § 60.642(a) is achieved through the use of an oxidation control system or a reduction control system followed by a continually operated incineration device. The monitoring device shall be certified by the manufacturer to be accurate to within ±1 percent of the temperature being measured.

When performance tests are conducted under the provision of § 60.8 to demonstrate compliance with the standards under § 60.642, the temperature of the gas leaving the incinerator combustion zone shall be determined using the monitoring device. If the volumetric ratio of sulfur dioxide to sulfur dioxide plus total reduced sulfur (expressed as SO_2) in the gas leaving the incinerator is $\leqq 0.98$, then temperature monitoring may be used to demonstrate that sulfur dioxide emission monitoring is sufficient to determine total sulfur emissions. At all times during the operation of the facility, the owner or operator shall maintain the average temperature of the gas leaving the combustion zone of the incinerator at or above the appropriate level determined during the most recent performance test to ensure the sulfur compound oxidation criteria are met. Operation at lower average temperatures may be considered by the Administrator to be unacceptable operation and maintenance of the affected facility. The owner or operator may request that the minimum incinerator temperature be reestablished by conducting new performance tests under § 60.8.

(3) Upon promulgation of a performance specification of continuous monitoring systems for total reduced sulfur compounds at sulfur recovery plants, the owner or operator may, as an alternative to paragraph (b)(2) of this section, install, calibrate, maintain, and operate a continuous emission monitoring system for total reduced sulfur compounds as required in paragraph (d) of this section in addition to a sulfur dioxide emission monitoring system. The sum of the equivalent sulfur mass emission rates from the two monitoring systems shall be used to compute the total sulfur emission rate (E).

(c) Where compliance is achieved through the use of a reduction control system not followed by a continually operated incineration device, the owner or operator shall install, calibrate, maintain, and operate a continuous monitoring system to measure the emission rate of reduced sulfur compounds as SO_2 equivalent in the gases discharged to the atmosphere. The SO_2 equivalent compound emission rate shall be expressed in terms of equivalent sulfur mass flow rates (kg/hr). The span of this monitoring system shall be set so that the equivalent

emission limit of §60.642(b) will be between 30 and 70 percent of the measurement range of the system. This requirement becomes effective upon promulgation of a performance specification for continuous monitoring systems for total reduced sulfur compounds at sulfur recovery plants.

(d) For those sources required to comply with paragraph (b) or (c) of this section, the average sulfur emission reduction efficiency achieved (R) shall be calculated for each 24-hour clock internal. The 24-hour interval may begin and end at any selected clock time, but must be consistent. The 24-hour average reduction efficiency (R) shall be computed based on the 24-hour average sulfur production rate (S) and sulfur emission rate (E), using the equation in §60.644(c)(1).

(1) Data obtained from the sulfur production rate monitoring device specified in paragraph (a) of this section shall be used to determine S.

(2) Data obtained from the sulfur emission rate monitoring systems specified in paragraphs (b) or (c) of this section shall be used to calculate a 24-hour average for the sulfur emission rate (E). The monitoring system must provide at least one data point in each successive 15-minute interval. At least two data points must be used to calculate each 1-hour average. A minimum of 18 1-hour averages must be used to compute each 24-hour average.

(e) In lieu of complying with (b) or (c) of this section, those sources with a design capacity of less than 150 LT/D of H_2S expressed as sulfur may calculate the sulfur emission reduction efficiency achieved for each 24-hour period by:

$$R = \frac{0.0236\,S}{X}(100\ \text{percent})$$

Where:

R= the sulfur dioxide removal efficiency achieved during the 24-hour period, percent;

S= the sulfur production rate during the 24-hour period, kg/hr;

X= the sulfur feed rate in the acid gas, LT/D; and 0.0236= conversion factor, LT/D per kg/hr.

(f) The monitoring devices required in paragraphs (b)(1), (b)(3) and (c) of this section shall be calibrated at least annually according to the manufacturer's specifications, as required by §60.13(b).

(g) The continuous emission monitoring systems required in paragraphs (b)(1), (b)(3), and (c) of this section shall be subject to the emission monitoring requirements of §60.13 of the General Provisions. For conducting the continuous emission monitoring system performance evaluation required by §60.13(c), Performance Specification 2 shall apply, and Method 6 shall be used for systems required by paragraph (b) of this section.

[50 FR 40160, Oct. 1, 1985, as amended at 54 FR 6680, Feb. 14, 1989]

§60.647 Recordkeeping and reporting requirements.

(a) Records of the calculations and measurements required in §60.642 (a) and (b) and §60.646 (a) through (g) must be retained for at least 2 years following the date of the measurements by owners and operators subject to this subpart. This requirement is included under §60.7(d) of the General Provisions.

(b) Each owner or operator shall submit a written report of excess emissions to the Administrator semiannually. For the purpose of these reports, excess emissions are defined as:

(1) Any 24-hour period (at consistent intervals) during which the average sulfur emission reduction efficiency (R) is less than the minimum required efficiency (Z).

(2) For any affected facility electing to comply with the provisions of §60.646(b)(2), any 24-hour period during which the average temperature of the gases leaving the combustion zone of an incinerator is less than the appropriate operating temperature as determined during the most recent performance test in accordance with the provisions of §60.646(b)(2). Each 24-hour period must consist of at least 96 temperature measurements equally spaced over the 24 hours.

(c) To certify that a facility is exempt from the control requirements of these standards, each owner or operator of a facility with a design capacity less that 2 LT/D of H_2S in the acid gas (expresssed as sulfur) shall keep, for the life of the facility, an analysis

demonstrating that the facility's design capacity is less than 2 LT/D of H_2S expressed as sulfur.

(d) Each owner or operator who elects to comply with §60.646(e) shall keep, for the life of the facility, a record demonstrating that the facility's design capacity is less than 150 LT/D of H_2S expressed as sulfur.

(e) The requirements of paragraph (b) of this section remain in force until and unless EPA, in delegating enforcement authority to a State under section 111(c) of the Act, approves reporting requirements or an alternative means of compliance surveillance adopted by such State. In that event, affected sources within the State will be relieved of obligation to comply with paragraph (b) of this section, provided that they comply with the requirements established by the State.

§ 60.648 Optional procedure for measuring hydrogen sulfide in acid gas—Tutwiler Procedure.[1]

(a) When an instantaneous sample is desired and H_2S concentration is ten grains per 1000 cubic foot or more, a 100 ml Tutwiler burette is used. For concentrations less than ten grains, a 500 ml Tutwiler burette and more dilute solutions are used. In principle, this method consists of titrating hydrogen sulfide in a gas sample directly with a standard solution of iodine.

(b) *Apparatus.* (See Figure 1.) A 100 or 500 ml capacity Tutwiler burette, with two-way glass stopcock at bottom and three-way stopcock at top which connect either with inlet tubulature or glass-stoppered cylinder, 10 ml capacity, graduated in 0.1 ml subdivision; rubber tubing connecting burette with leveling bottle.

(c) *Reagents.* (1) Iodine stock solution, 0.1N. Weight 12.7 g iodine, and 20 to 25 g cp potassium iodide for each liter of solution. Dissolve KI in as little water as necessary; dissolve iodine in concentrated KI solution, make up to proper volume, and store in glass-stoppered brown glass bottle.

(2) Standard iodine solution, 1 ml=0.001771 g I. Transfer 33.7 ml of above 0.1N stock solution into a 250 ml volumetric flask; add water to mark and mix well. Then, for 100 ml sample of gas, 1 ml of standard iodine solution is equivalent to 100 grains H_2S per cubic feet of gas.

(3) Starch solution. Rub into a thin paste about one teaspoonful of wheat starch with a little water; pour into about a pint of boiling water; stir; let cool and decant off clear solution. Make fresh solution every few days.

(d) *Procedure.* Fill leveling bulb with starch solution. Raise (L), open cock (G), open (F) to (A), and close (F) when solutions starts to run out of gas inlet. Close (G). Purge gas sampling line and connect with (A). Lower (L) and open (F) and (G). When liquid level is several ml past the 100 ml mark, close (G) and (F), and disconnect sampling tube. Open (G) and bring starch solution to 100 ml mark by raising (L); then close (G). Open (F) momentarily, to bring gas in burette to atmospheric pressure, and close (F). Open (G), bring liquid level down to 10 ml mark by lowering (L). Close (G), clamp rubber tubing near (E) and disconnect it from burette. Rinse graduated cylinder with a standard iodine solution (0.00171 g I per ml); fill cylinder and record reading. Introduce successive small amounts of iodine thru (F); shake well after each addition; continue until a faint permanent blue color is obtained. Record reading; subtract from previous reading, and call difference D.

(e) With every fresh stock of starch solution perform a blank test as follows: introduce fresh starch solution into burette up to 100 ml mark. Close (F) and (G). Lower (L) and open (G). When liquid level reaches the 10 ml mark, close (G). With air in burette, titrate as during a test and up to same end point. Call ml of iodine used C. Then,

$$\text{Grains } H_2S \text{ per 100 cubic foot of gas} = 100\ (D—C)$$

(f) Greater sensitivity can be attained if a 500 ml capacity Tutwiler burette is used with a more dilute (0.001N) iodine solution. Concentrations less than 1.0 grains per 100 cubic foot can be determined in this way. Usually, the

[1] Gas Engineers Handbook, Fuel Gas Engineering Practices, The Industrial Press, 93 Worth Street, New York, NY, 1966, First Edition, Second Printing, page 6/25 (Docket A–80–20–A, Entry II–I–67).

starch-iodine end point is much less distinct, and a blank determination of end point, with H_2S-free gas or air, is required.

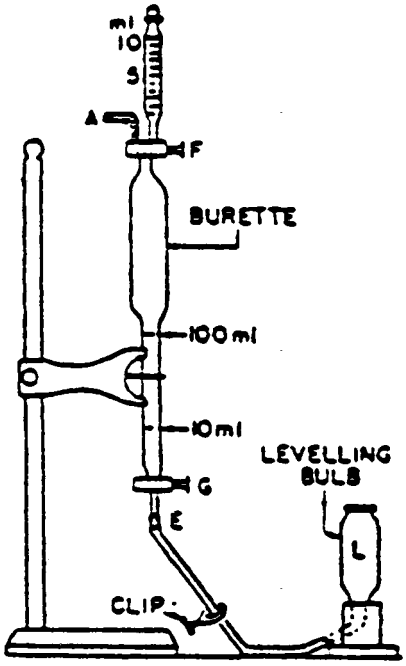

Figure 1. Tutwiler burette (lettered items mentioned in text).

Subpart MMM [Reserved]

Subpart NNN—Standards of Performance for Volatile Organic Compound (VOC) Emissions From Synthetic Organic Chemical Manufacturing Industry (SOCMI) Distillation Operations

SOURCE: 55 FR 26942, June 29, 1990, unless otherwise noted.

§ 60.660 Applicability and designation of affected facility.

(a) The provisions of this subpart apply to each affected facility designated in paragraph (b) of this section that is part of a process unit that produces any of the chemicals listed in § 60.667 as a product, co-product, by-product, or intermediate, except as provided in paragraph (c).

(b) The affected facility is any of the following for which construction, modification, or reconstruction commenced after December 30, 1983:

(1) Each distillation unit not discharging its vent stream into a recovery system.

(2) Each combination of a distillation unit and the recovery system into which its vent stream is discharged.

(3) Each combination of two or more distillation units and the common recovery system into which their vent streams are discharged.

(c) Exemptions from the provisions of paragraph (a) of this section are as follows:

(1) Any distillation unit operating as part of a process unit which produces coal tar or beverage alcohols, or which uses, contains, and produces no VOC is not an affected facility.

(2) Any distillation unit that is subject to the provisions of Subpart DDD is not an affected facility.

(3) Any distillation unit that is designed and operated as a batch operation is not an affected facility.

(4) Each affected facility that has a total resource effectiveness (TRE) index value greater than 8.0 is exempt from all provisions of this subpart except for §§ 60.662; 60.664 (d), (e), and (f); and 60.665 (h) and (l).

(5) Each affected facility in a process unit with a total design capacity for all chemicals produced within that unit of less than one gigagram per year is exempt from all provisions of this subpart except for the recordkeeping and reporting requirements in paragraphs (j), (l)(6), and (n) of § 60.665.

(6) Each affected facility operated with a vent stream flow rate less than 0.008 scm/min is exempt from all provisions of this subpart except for the test method and procedure and the recordkeeping and reporting requirements in § 60.664(g) and paragraphs (i), (l)(5), and (o) of § 60.665.

[NOTE: The intent of these standards is to minimize the emissions of VOC through the application of best demonstrated technology (BDT). The numerical emission limits in these standards are expressed in terms of total organic compounds (TOC), measured as

TOC less methane and ethane. This emission limit reflects the performance of BDT.]

§ 60.661 Definitions.

As used in this subpart, all terms not defined here shall have the meaning given them in the Act and in subpart A of part 60, and the following terms shall have the specific meanings given them.

Batch distillation operation means a noncontinuous distillation operation in which a discrete quantity or batch of liquid feed is charged into a distillation unit and distilled at one time. After the initial charging of the liquid feed, no additional liquid is added during the distillation operation.

Boiler means any enclosed combustion device that extracts useful energy in the form of steam.

By compound means by individual stream components, not carbon equivalents.

Continuous recorder means a data recording device recording an instantaneous data value at least once every 15 minutes.

Distillation operation means an operation separating one or more feed stream(s) into two or more exit stream(s), each exit stream having component concentrations different from those in the feed stream(s). The separation is achieved by the redistribution of the components between the liquid and vapor-phase as they approach equilibrium within the distillation unit.

Distillation unit means a device or vessel in which distillation operations occur, including all associated internals (such as trays or packing) and accessories (such as reboiler, condenser, vacuum pump, steam jet, etc.), plus any associated recovery system.

Flame zone means the portion of the combustion chamber in a boiler occupied by the flame envelope.

Flow indicator means a device which indicates whether gas flow is present in a vent stream.

Halogenated vent stream means any vent stream determined to have a total concentration (by volume) of compounds containing halogens of 20 ppmv (by compound) or greater.

Incinerator means any enclosed combustion device that is used for destroying organic compounds and does not extract energy in the form of steam or process heat.

Process heater means a device that transfers heat liberated by burning fuel to fluids contained in tubes, including all fluids except water that is heated to produce steam.

Process unit means equipment assembled and connected by pipes or ducts to produce, as intermediates or final products, one or more of the chemicals in § 60.667. A process unit can operate independently if supplied with sufficient fuel or raw materials and sufficient product storage facilities.

Product means any compound or chemical listed in § 60.667 that is produced for sale as a final product as that chemical, or for use in the production of other chemicals or compounds. By-products, co-products, and intermediates are considered to be products.

Recovery device means an individual unit of equipment, such as an absorber, carbon adsorber, or condenser, capable of and used for the purpose of recovering chemicals for use, reuse, or sale.

Recovery system means an individual recovery device or series of such devices applied to the same vent stream.

Total organic compounds (TOC) means those compounds measured according to the procedures in § 60.664(b)(4). For the purposes of measuring molar composition as required in § 60.664(d)(2)(i); hourly emissions rate as required in § 60.664(d)(5) and § 60.664(e); and TOC concentration as required in § 60.665(b)(4) and § 60.665(g)(4), those compounds which the Administrator has determined do not contribute appreciably to the formation of ozone are to be excluded. The compounds to be excluded are identified in Environmental Protection Agency's statements on ozone abatement policy for State Implementation Plans (SIP) revisions (42 FR 35314; 44 FR 32042; 45 FR 32424; 45 FR 48942).

TRE index value means a measure of the supplemental total resource requirement per unit reduction of TOC associated with an individual distillation vent stream, based on vent stream flow rate, emission rate of TOC net heating value, and corrosion properties

(whether or not the vent stream is halogenated), as quantified by the equation given under § 60.664(e).

Vent stream means any gas stream discharged directly from a distillation facility to the atmosphere or indirectly to the atmosphere after diversion through other process equipment. The vent stream excludes relief valve discharges and equipment leaks including, but not limited to, pumps, compressors, and valves.

§ 60.662 Standards.

Each owner or operator of any affected facility shall comply with paragraph (a), (b), or (c) of this section for each vent stream on and after the date on which the initial performance test required by § 60.8 and § 60.664 is completed, but not later than 60 days after achieving the maximum production rate at which the affected facility will be operated, or 180 days after the initial start-up, whichever date comes first. Each owner or operator shall either:

(a) Reduce emissions of TOC (less methane and ethane) by 98 weight-percent, or to a TOC (less methane and ethane) concentration of 20 ppmv, on a dry basis corrected to 3 percent oxygen, whichever is less stringent. If a boiler or process heater is used to comply with this paragraph, then the vent stream shall be introduced into the flame zone of the boiler or process heater; or

(b) Combust the emissions in a flare that meets the requirements of § 60.18; or

(c) Maintain a TRE index value greater than 1.0 without use of VOC emission control devices.

§ 60.663 Monitoring of emissions and operations.

(a) The owner or operator of an affected facility that uses an incinerator to seek to comply with the TOC emission limit specified under § 60.662(a) shall install, calibrate, maintain, and operate according to manufacturer's specifications the following equipment:

(1) A temperature monitoring device equipped with a continuous recorder and having an accuracy of ±1 percent of the temperature being monitored expressed in degrees Celsius or ±0.5 °C, whichever is greater.

(i) Where an incinerator other than a catalytic incinerator is used, a temperature monitoring device shall be installed in the firebox.

(ii) Where a catalytic incinerator is used, temperature monitoring devices shall be installed in the gas stream immediately before and after the catalyst bed.

(2) A flow indicator that provides a record of vent stream flow to the incinerator at least once every hour for each affected facility. The flow indicator shall be installed in the vent stream from each affected facility at a point closest to the inlet of each incinerator and before being joined with any other vent stream.

(b) The owner or operator of an affected facility that uses a flare to seek to comply with § 60.662(b) shall install, calibrate, maintain and operate according to manufacturer's specifications the following equipment:

(1) A heat sensing device, such as a ultra-violet beam sensor or thermocouple, at the pilot light to indicate the continuous presence of a flame.

(2) A flow indicator that provides a record of vent stream flow to the flare at least once every hour for each affected facility. The flow indicator shall be installed in the vent stream from each affected facility at a point closest to the flare and before being joined with any other vent stream.

(c) The owner or operator of an affected facility that uses a boiler or process heater to seek to comply with § 60.662(a) shall install, calibrate, maintain and operate according to the manufacturer's specifications in the following equipment:

(1) A flow indicator that provides a record of vent stream flow to the boiler or process heater at least once every hour for each affected facility. The flow indicator shall be installed in the vent stream from each distillation unit within an affected facility at a point closest to the inlet of each boiler or process heater and before being joined with any other vent stream.

(2) A temperature monitoring device in the firebox equipped with a continuous recorder and having an accuracy of ±1 percent of the temperature being

measured expressed in degrees Celsius or ±0.5 °C, whichever is greater, for boilers or process heaters of less than 44 MW (150 million Btu/hr) heat input design capacity.

(3) Monitor and record the periods of operation of the boiler or process heater if the design heat input capacity of the boiler or process heater is 44 MW (150 million Btu/hr) or greater. The records must be readily available for inspection.

(d) The owner or operator of an affected facility that seeks to comply with the TRE index value limit specified under §60.662(c) shall install, calibrate, maintain, and operate according to manufacturer's specifications the following equipment, unless alternative monitoring procedures or requirements are approved for that facility by the Administrator:

(1) Where an absorber is the final recovery device in the recovery system:

(i) A scrubbing liquid temperature monitoring device having an accuracy of ±1 percent of the temperature being monitored expressed in degrees Celsius or ±0.5 °C, whichever is greater, and a specific gravity monitoring device having an accuracy of ±0.02 specific gravity units, each equipped with a continuous recorder, or

(ii) An organic monitoring device used to indicate the concentration level of organic compounds exiting the recovery device based on a detection principle such as infrared, photoionization, or thermal conductivity, each equipped with a continuous recorder.

(2) Where a condenser is the final recovery device in the recovery system:

(i) A condenser exit (product side) temperature monitoring device equipped with a continuous recorder and having an accuracy of ±1 percent of the temperature being monitored expressed in degrees Celsius or ±0.5 °C, whichever is greater, or

(ii) An organic monitoring device used to monitor organic compounds exiting the recovery device based on a detection principle such as infra-red, photoionization, or thermal conductivity, each equipped with a continuous recorder.

(3) Where a carbon adsorber is the final recovery device unit in the recovery system:

(i) An integrating steam flow monitoring device having an accuracy of ±10 percent, and a carbon bed temperature monitoring device having an accuracy of ±1 percent of the temperature being monitored expressed in degrees Celsius or ±0.5 °C, whichever is greater, both equipped with a continuous recorder, or

(ii) An organic monitoring device used to indicate the concentration level of organic compounds exiting the recovery device based on a detection principle such as infra-red, photoionization, or thermal conductivity, each equipped with a continuous recorder.

(e) An owner or operator of an affected facility seeking to demonstrate compliance with the standards specified under §60.662 with control devices other than incinerator, boiler, process heater, or flare; or recovery device other than an absorber, condenser, or carbon absorber shall provide to the Administrator information describing the operation of the control device or recovery device and the process parameter(s) which would indicate proper operation and maintenance of the device. The Administrator may request further information and will specify appropriate monitoring procedures or requirements.

§60.664 Test methods and procedures.

(a) For the purpose of demonstrating compliance with §60.662, all affected facilities shall be run at full operating conditions and flow rates during any performance test.

(b) The following methods in appendix A to this part, except as provided under §60.8(b), shall be used as reference methods to determine compliance with the emission limit or percent reduction efficiency specified under §60.662(a).

(1) Method 1 or 1A, as appropriate, for selection of the sampling sites. The control device inlet sampling site for determination of vent stream molar composition or TOC (less methane and ethane) reduction efficiency shall be prior to the inlet of the control device and after the recovery system.

(2) Method 2, 2A, 2C, or 2D, as appropriate, for determination of the gas volumetric flow rates.

(3) The emission rate correction factor, integrated sampling and analysis procedure of Method 3 shall be used to determine the oxygen concentration ($\%O_{2d}$) for the purposes of determining compliance with the 20 ppmv limit. The sampling site shall be the same as that of the TOC samples, and the samples shall be taken during the same time that the TOC samples are taken.

The TOC concentration corrected to 3 percent 0_2 (C_c) shall be computed using the following equation:

$$C_c = C_{TOC}\frac{17.9}{20.9 - \%O_{2d}}$$

where:

C_c=Concentration of TOC corrected to 3 percent O_2, dry basis, ppm by volume.

C_{TOC}=Concentration of TOC (minus methane and ethane), dry basis, ppm by volume.

$\%O_{2d}$=Concentration of O_2, dry basis, percent by volume.

(4) Method 18 to determine the concentration of TOC in the control device outlet and the concentration of TOC in the inlet when the reduction efficiency of the control device is to be determined.

(i) The sampling time for each run shall be 1 hour in which either an integrated sample or four grab samples shall be taken. If grab sampling is used then the samples shall be taken at 15-minute intervals.

(ii) The emission reduction (R) of TOC (minus methane and ethane) shall be determined using the following equation:

$$R = \frac{E_i - E_o}{E_i} \times 100$$

where:

R=Emission reduction, percent by weight.

E_i=Mass rate of TOC entering the control device, kg TOC/hr.

E_o=Mass rate of TOC discharged to the atmosphere, kg TOC/hr.

(iii) The mass rates of TOC (E_i, E_o) shall be computed using the following equations:

$$E_i = K_2\left(\sum_{j=1}^{n} C_{ij}M_{ij}\right)Q_i$$

$$E_O = K_2\left(\sum_{j=1}^{n} C_{oj}M_{oj}\right)Q_O$$

where:

C_{ij}, C_{oj}=Concentration of sample component ''j'' of the gas stream at the inlet and outlet of the control device, respectively, dry basis, ppm by volume.

M_{ij}, M_{oj}=Molecular weight of sample component ''j'' of the gas stream at the inlet and outlet of the control device, respectively, g/g-mole (lb/lb-mole).

Q_i, Q_o=Flow rate of gas stream at the inlet and outlet of the control device, respectively, dscm/min (dscf/hr).

K_2=Constant, 2.494×10^{-6} (1/ppm) (g-mole/scm) (kg/g) (min/hr), where standard temperature for (g-mole/scm) is 20 °C.

(iv) The TOC concentration (C_{TOC}) is the sum of the individual components and shall be computed for each run using the following equation:

$$C_{TOC} = \sum_{j=1}^{n} C_j$$

where:

C_{TOC}=Concentration of TOC (minus methane and ethane), dry basis, ppm by volume.

C_j=Concentration of sample components ''j'', dry basis, ppm by volume.

n=Number of components in the sample.

(5) When a boiler or process heater with a design heat input capacity of 44 MW (150 million Btu/hour) or greater is used to seek to comply with §60.662(a), the requirement for an initial performance test is waived, in accordance with §60.8(b). However, the Administrator reserves the option to require testing at such other times as may be required, as provided for in section 114 of the Act.

(c) When a flare is used to seek to comply with §60.662(b), the flare shall comply with the requirements of §60.18.

(d) The following test methods in appendix A to this part, except as provided under §60.8(b), shall be used for determining the net heating value of

the gas combusted to determine compliance under § 60.662(b) and for determining the process vent stream TRE index value to determine compliance under § 60.662(c).

(1)(i) Method 1 or 1A, as appropriate, for selection of the sampling site. The sampling site for the vent stream flow rate and molar composition determination prescribed in § 60.664(d) (2) and (3) shall be, except for the situations outlined in paragraph (d)(1)(ii) of this section, prior to the inlet of any control device, prior to any post-distillation dilution of the stream with air, and prior to any post-distillation introduction of halogenated compounds into the process vent stream. No transverse site selection method is needed for vents smaller than 4 inches in diameter.

(ii) If any gas stream other than the distillation vent stream from the affected facility is normally conducted through the final recovery device.

(A) The sampling site for vent stream flow rate and molar composition shall be prior to the final recovery device and prior to the point at which the nondistillation stream is introduced.

(B) The efficiency of the final recovery device is determined by measuring the TOC concentration using Method 18 at the inlet to the final recovery device after the introduction of any nondistillation vent stream and at the outlet of the final recovery device.

(C) This efficiency is applied to the TOC concentration measured prior to the final recovery device and prior to the introduction of the nondistillation stream to determine the concentration of TOC in the distillation vent stream from the final recovery device. This concentration of TOC is then used to perform the calculations outlined in § 60.664(d) (4) and (5).

(2) The molar composition of the process vent stream shall be determined as follows:

(i) Method 18 to measure the concentration of TOC including those containing halogens.

(ii) ASTM D1946–77 (incorporation by reference as specified in § 60.17 of this part) to measure the concentration of carbon monoxide and hydrogen.

(iii) Method 4 to measure the content of water vapor.

(3) The volumetric flow rate shall be determined using Method 2, 2A, 2C, or 2D, as appropriate.

(4) The net heating value of the vent stream shall be calculated using the following equation:

$$H_T = K_1\left(\sum_{j=1}^{n} C_j H_j\right)$$

where:

H_T=Net heating value of the sample, MJ/scm, where the net enthalpy per mole of vent stream is based on combustion at 25 °C and 760 mm Hg, but the standard temperature for determining the volume corresponding to one mole is 20 °C, as in the definition of Q_s (vent stream flow rate).

K_1=Constant, 1.740×10^{-7}

$$\frac{(1)}{\text{ppm}}\,\frac{(\text{g-mole})}{\text{scm}}\,\frac{(\text{MJ}),}{\text{kcal}}$$

where standard temperature for

$$\frac{(\text{g-mole})}{\text{scm}}$$

is 20 °C.

C_j=Concentration on a wet basis of compound j in ppm, as measured for organics by Method 18 and measured for hydrogen and carbon monoxide by ASTM D1946–77 (incorporation by reference as specified in § 60.17 of this part) as indicated in § 60.664(d)(2).

H_j=Net heat of combustion of compound j, kcal/g-mole, based on combustion at 25 °C and 760 mm Hg.

The heats of combustion of vent stream components would be required to be determined using ASTM D2382–76 (incorporation by reference as specified in § 60.17 of this part) if published values are not available or cannot be calculated.

(5) The emission rate of TOC in the vent stream shall be calculated using the following equation:

$$E_{TOC} = K_2\left[\sum_{j=1}^{n} C_j M_j\right] Q_s$$

where:

E_{TOC}=Emission rate of TOC in the sample, kg/hr.

K_2=Constant, 2.494×10^{-6} (l/ppm) (g-mole/scm) (kg/g) (min/hr), where standard temperature for (g-mole/scm) is 20 °C.

C_j=Concentration on a basis of compound j in ppm as measured by Method 18 as indicated in § 60.664(d)(2).
M_j=Molecular weight of sample j, g/g-mole.
Q_s=Vent stream flow rate (scm/min) at a temperature of 20 °C.

(6) The total process vent stream concentration (by volume) of compounds containing halogens (ppmv, by compound) shall be summed from the individual concentrations of compounds containing halogens which were measured by Method 18.

(e) For purposes of complying with § 60.662(c) the owner or operator of a facility affected by this subpart shall calculate the TRE index value of the vent stream using the equation for incineration in paragraph (e)(1) of this section for halogenated vent streams. The owner or operator of an affected facility with a nonhalogenated vent stream shall determine the TRE index value by calculating values using both the incinerator equation in (e)(1) and the flare equation in (e)(2) of this section and selecting the lower of the two values.

(1) The equation for calculating the TRE index value of a vent stream controlled by an incinerator is as follows:

$$TRE = \frac{1}{E_{TOC}}\left[a + b(Q_s) + c(Q_s)^{0.88} + d(Q_s)(H_T) + e(Q_s)^{0.88}(H_T)^{0.88} + f(Y_s)^{0.5}\right]$$

(i) where for a vent stream flow rate (scm/min) at a standard temperature of 20 °C that is greater than or equal to 14.2 scm/min:

TRE=TRE index value.
Q_s=Vent stream flow rate (scm/min) at a standard temperature of 20 °C.
H_T=Vent stream net heating value (MJ/scm), where the net enthalpy per mole of vent stream is based on combustion at 25 °C and 760 mm Hg, but the standard temperature for determining the volume corresponding to one mole is 20 °C as in the definition of Q_s.
Y_s=Q_s for all vent stream categories listed in Table 1 except for Category E vent streams where $Y_s=(Q_s)(H_T)/3.6$.
E_{TOC}=Hourly emissions of TOC reported in kg/hr.
a, b, c, d, e, and f are coefficients.

The set of coefficients that apply to a vent stream can be obtained from Table 1.

TABLE 1. DISTILLATION NSPS TRE COEFFICIENTS FOR VENT STREAMS CONTROLLED BY AN INCINERATOR

DESIGN CATEGORY A1. FOR HALOGENATED PROCESS VENT STREAMS, IF 0 ≤ NET HEATING VALUE (MJ/scm) ≤ 3.5.

Q_S = Vent Stream Flow rate (scm/min)	a	b	c	d	e	f
$14.2 \leq Q_S \leq 18.8$	19.18370	0.27580	0.75762	-0.13064	0	0.01025
$18.8 < Q_S \leq 699$	20.00563	0.27580	0.30387	-0.13064	0	0.01025
$699 < Q_S \leq 1400$	39.87022	0.29973	0.30387	-0.13064	0	0.01449
$1400 < Q_S \leq 2100$	59.73481	0.31467	0.30387	-0.13064	0	0.01775
$2100 < Q_S \leq 2800$	79.59941	0.32572	0.30387	-0.13064	0	0.02049
$2800 < Q_S \leq 3500$	99.46400	0.33456	0.30387	-0.13064	0	0.02291

DESIGN CATEGORY A2. FOR HALOGENATED PROCESS VENT STREAMS, IF NET HEATING VALUE > 3.5 MJ/scm:

Q_S = Vent Stream Flow rate (scm/min)	a	b	c	d	e	f
$14.2 \leq Q_S \leq 18.8$	18.84466	0.26742	-0.20044	0	0	0.01025
$18.8 < Q_S \leq 699$	19.66658	0.26742	-0.25332	0	0	0.01025
$699 < Q_S \leq 1400$	39.19213	0.29062	-0.25332	0	0	0.01449
$1400 < Q_S \leq 2100$	58.71768	0.30511	-0.25332	0	0	0.01775
$2800 < Q_S \leq 3500$	78.24323	0.31582	-0.25332	0	0	0.02049
	97.76879	0.32439	-0.25332	0	0	0.02291

DESIGN CATEGORY B. FOR NONHALOGENATED PROCESS VENT STREAMS, IF 0 ≤ NET HEATING VALUE (MJ/scm) ≤ 0.48:

Q_S = Vent Stream Flow rate (scm/min)	a	b	c	d	e	f
$14.2 \leq Q_S \leq 1340$	8.54245	0.10555	0.09030	-0.17109	0	0.01025
$1340 < Q_S \leq 2690$	16.94386	0.11470	0.09030	-0.17109	0	0.01449
$2690 < Q_S \leq 4040$	25.34528	0.12042	0.09030	-0.17109	0	0.01775

DESIGN CATEGORY C. FOR NONHALOGENATED PROCESS VENT STREAMS, IF 0.48 < NET HEATING VALUE (MJ/scm) ≤ 1.9:

Q_S = Vent Stream Flow rate (scm/min)	a	b	c	d	e	f
$14.2 \leq Q_S \leq 1340$	9.25233	0.06105	0.31937	-0.16181	0	0.01025
$1340 < Q_S \leq 2690$	18.36363	0.06635	0.31937	-0.16181	0	0.01449
$2690 < Q_S \leq 4040$	27.47492	0.06965	0.31937	-0.16181	0	0.01775

DESIGN CATEGORY D. FOR NONHALOGENATED PROCESS VENT STREAMS, IF 1.9 < NET HEATING VALUE (MJ/scm) ≤ 3.6:

Q_S = Vent Stream Flow rate (scm/min)	a	b	c	d	e	f
$14.2 \leq Q_S \leq 1180$	6.67868	0.06943	0.02582	0	0	0.01025
$1180 < Q_S \leq 2370$	13.21633	0.07546	0.02582	0	0	0.01449
$2370 < Q_S \leq 3550$	19.75398	0.07922	0.02582	0	0	0.01775

DESIGN CATEGORY E. FOR NONHALOGENATED PROCESS VENT STREAMS, IF NET HEATING VALUE > 3.6 MJ/scm:

Y_S = Dilution Flow rate (scm/min) = $(Q_S)(H_T)/3.6$	a	b	c	d	e	f
$14.2 \leq Y_S \leq 1180$	6.67868	0	0	-0.00707	0.02220	0.01025
$1180 < Y_S \leq 2370$	13.21633	0	0	-0.00707	0.02412	0.01449
$2370 < Y_S \leq 3550$	19.75398	0	0	-0.00707	0.02533	0.01775

(ii) where for a vent stream flow rate (scm/min) at a standard temperature of 20 °C that is less than 14.2 scm/min:

TRE=TRE index value.

Q_S=14.2 scm/min.

H_T=(FLOW)(HVAL)/14.2.

where by the following inputs are used:

FLOW=Vent stream flow rate (scm/min), at a standard temperature of 20 °C.

HVAL=Vent stream net heating value (MJ/scm), where the net enthalpy per mole of vent stream is based on combustion at 25 °C and 760 mm Hg, but the standard temperature for determining the volume corresponding to one mole is 20 °C as in definition of Q_s.

Y_s=14.2 scm/min for all vent stream categories listed in Table 1 except for Category E vent streams, where $Y_s=(14.2)(H_T)/3.6$.

E_{TOC}=Hourly emissions of TOC reported in kg/hr.

a, b, c, d, e, and f are coefficients.

The set of coefficients that apply to a vent stream can be obtained from Table 1.

(2) The equation for calculating the TRE index value of a vent stream controlled by a flare is as follows:

$$TRE = \frac{1}{E_{TOC}}\left[a(Q_s) + b(Q_s)^{0.8} + c(Q_s)(H_T) + d(E_{TOC}) + e\right]$$

where:

TRE=TRE index value.

E_{TOC}=Hourly emission rate of TOC reported in kg/hr.

Q_s=Vent stream flow rate (scm/min) at a standard temperature of 20 °C.

H_T=Vent stream net heating value (MJ/scm) where the net enthalpy per mole of offgas is based on combustion at 25 °C and 760 mm Hg, but the standard temperature for determining the volume corresponding to one mole is 20 °C as in the definition of Q_s.

a, b, c, d, and e are coefficients.

The set of coefficients that apply to a vent stream shall be obtained from Table 2.

TABLE 2—DISTILLATION NSPS TRE COEFFICIENTS FOR VENT STREAMS CONTROLLED BY A FLARE

	a	b	c	d	e
H_T <11.2 MJ/scm	2.25	0.288	−0.193	−0.0051	2.08
H_T >11.2 MJ/scm	0.309	0.0619	−0.0043	−0.0034	2.08

(f) Each owner or operator of an affected facility seeking to comply with § 60.660(c)(4) or § 60.662(c) shall recalculate the TRE index value for that affected facility whenever process changes are made. Examples of process changes include changes in production capacity, feedstock type, or catalyst type, or whenever there is replacement, removal, or addition of recovery equipment. The TRE index value shall be recalculated based on test data, or on best engineering estimates of the effects of the change to the recovery system.

(1) Where the recalculated TRE index value is less than or equal to 1.0, the owner or operator shall notify the Administrator within 1 week of the recalculation and shall conduct a performance test according to the methods and procedures required by § 60.664 in order to determine compliance with § 60.662(a). Performance tests must be conducted as soon as possible after the process change but no later than 180 days from the time of the process change.

(2) Where the initial TRE index value is greater than 8.0 and the recalculated TRE index value is less than or equal to 8.0 but greater than 1.0, the owner or operator shall conduct a performance test in accordance with §§ 60.8 and 60.664 and shall comply with §§ 60.663, 60.664 and 60.665. Performance tests must be conducted as soon as possible after the process change but no later than 180 days from the time of the process change.

(g) Any owner or operator subject to the provisions of this subpart seeking to demonstrate compliance with § 60.660(c)(6) shall use Method 2, 2A, 2C, or 2D as appropriate, for determination of volumetric flow rate.

§ 60.665 Reporting and recordkeeping requirements.

(a) Each owner or operator subject to § 60.662 shall notify the Administrator of the specific provisions of § 60.662 (§ 60.662 (a), (b), or (c)) with which the owner or operator has elected to comply. Notification shall be submitted with the notification of initial start-up required by § 60.7(a)(3). If an owner or operator elects at a later date to use an alternative provision of § 60.662 with which he or she will comply, then the Administrator shall be notified by the owner or operator 90 days before implementing a change and, upon implementing the change, a performance test shall be performed as specified by § 60.664 within 180 days.

(b) Each owner or operator subject to the provisions of this subpart shall keep an up-to-date, readily accessible record of the following data measured during each performance test, and also include the following data in the report of the initial performance test required under § 60.8. Where a boiler or process heater with a design heat input capacity of 44 MW (150 million Btu/hour) or greater is used to comply with § 60.662(a), a report containing performance test data need not be submitted, but a report containing the information in § 60.665(b)(2)(i) is required. The same data specified in this section shall be submitted in the reports of all subsequently required performance tests where either the emission control efficiency of a control device, outlet concentration of TOC, or the TRE index value of a vent stream from a recovery system is determined.

(1) Where an owner or operator subject to the provisions of this subpart seeks to demonstrate compliance with § 60.662(a) through use of either a thermal or catalytic incinerator:

(i) The average firebox temperature of the incinerator (or the average temperature upstream and downstream of the catalyst bed for a catalytic incinerator), measured at least every 15 minutes and averaged over the same time period of the performance testing, and

(ii) The percent reduction of TOC determined as specified in § 60.664(b) achieved by the incinerator, or the concentration of TOC (ppmv, by compound) determined as specified in § 60.664(b) at the outlet of the control device on a dry basis corrected to 3 percent oxygen.

(2) Where an owner or operator subject to the provisions of this subpart seeks to demonstrate compliance with § 60.662(a) through use of a boiler or process heater:

(i) A description of the location at which the vent stream is introduced into the boiler or process heater, and

(ii) The average combustion temperature of the boiler or process heater with a design heat input capacity of less than 44 MW (150 million Btu/hr) measured at least every 15 minutes and averaged over the same time period of the performance testing.

(3) Where an owner or operator subject to the provisions of this subpart seeks to demonstrate compliance with § 60.662(b) through use of a smokeless flare, flare design (i.e., steam-assisted, air-assisted or nonassisted), all visible emission readings, heat content determinations, flow rate measurements, and exit velocity determinations made during the performance test, continuous records of the flare pilot flame monitoring, and records of all periods of operations during which the pilot flame is absent.

(4) Where an owner or operator subject to the provisions of this subpart seeks to demonstrate compliance with § 60.662(c):

(i) Where an absorber is the final recovery device in the recovery system, the exit specific gravity (or alternative parameter which is a measure of the degree of absorbing liquid saturation, if approved by the Administrator), and average exit temperature, of the absorbing liquid measured at least every 15 minutes and averaged over the same time period of the performance testing (both measured while the vent stream is normally routed and constituted), or

(ii) Where a condenser is the final recovery device in the recovery system, the average exit (product side) temperature measured at least every 15 minutes and averaged over the same time period of the performance testing while the vent stream is routed and constituted normally, or

(iii) Where a carbon adsorber is the final recovery device in the recovery system, the total steam mass flow

measured at least every 15 minutes and averaged over the same time period of the performance test (full carbon bed cycle), temperature of the carbon bed after regeneration (and within 15 minutes of completion of any cooling cycle(s)), and duration of the carbon bed steaming cycle (all measured while the vent stream is routed and constituted normally), or

(iv) As an alternative to § 60.665(b)(4)((i), (ii) or (iii), the concentration level or reading indicated by the organics monitoring device at the outlet of the absorber, condenser, or carbon adsorber, measured at least every 15 minutes and averaged over the same time period of the performance testing while the vent stream is normally routed and constituted.

(v) All measurements and calculations performed to determine the TRE index value of the vent stream.

(c) Each owner or operator subject to the provisions of this subpart shall keep up-to-date, readily accessible continuous records of the equipment operating parameters specified to be monitored under § 60.663 (a) and (c) as well as up-to-date, readily accessible records of periods of operation during which the parameter boundaries established during the most recent performance test are exceeded. The Administrator may at any time require a report of these data. Where a combustion device is used to comply with § 60.662(a), periods of operation during which the parameter boundaries established during the most recent performance tests are exceeded are defined as follows:

(1) For thermal incinerators, all 3-hour periods of operation during which the average combustion temperature was more than 28 ° C (50 ° F) below the average combustion temperature during the most recent performance test at which compliance with § 60.662(a) was determined.

(2) For catalytic incinerators, all 3-hour periods of operation during which the average temperature of the vent stream immediately before the catalyst bed is more than 28 ° C (50 ° F) below the average temperature of the vent stream during the most recent performance test at which compliance with § 60.662(a) was determined. The owner or operator also shall record all 3-hour periods of operation during which the average temperature difference across the catalyst bed is less than 80 percent of the average temperature difference of the device during the most recent performance test at which compliance with § 60.662(a) was determined.

(3) All 3-hour periods of operation during which the average combustion temperature was more than 28 ° C (50 ° F) below the average combustion temperature during the most recent performance test at which compliance with § 60.662(a) was determined for boilers or process heaters with a design heat input capacity of less than 44 MW (150 million Btu/hr).

(4) For boilers or process heaters, whenever there is a change in the location at which the vent stream is introduced into the flame zone as required under § 60.662(a).

(d) Each owner or operator subject to the provisions of this subpart shall keep up to date, readily accessible continuous records of the flow indication specified under § 60.663(a)(2), § 60.663(b)(2) and § 60.663(c)(1), as well as up-to-date, readily accessible records of all periods when the vent stream is diverted from the control device or has no flow rate.

(e) Each owner or operator subject to the provisions of this subpart who uses a boiler or process heater with a design heat input capacity of 44 MW or greater to comply with § 60.662(a) shall keep an up-to-date, readily accessible record of all periods of operation of the boiler or process heater. (Examples of such records could include records of steam use, fuel use, or monitoring data collected pursuant to other State or Federal regulatory requirements.)

(f) Each owner or operator subject to the provisions of this subpart shall keep up-to-date, readily accessible continuous records of the flare pilot flame monitoring specified under § 60.663(b), as well as up-to-date, readily accessible records of all periods of operations in which the pilot flame is absent.

(g) Each owner or operator subject to the provisions of this subpart shall

keep up-to-date, readily accessible continuous records of the equipment operating parameters specified to be monitored under § 60.663(d), as well as up-to-date, readily accessible records of periods of operation during which the parameter boundaries established during the most recent performance test are exceeded. The Administrator may at any time require a report of these data. Where an owner or operator seeks to comply with § 60.662(c), periods of operation during which the parameter boundaries established during the most recent performance tests are exceeded are defined as follows:

(1) Where an absorber is the final recovery device in a recovery system, and where an organic compound monitoring device is not used:

(i) All 3-hour periods of operation during which the average absorbing liquid temperature was more than 11 °C (20 °F) above the average absorbing liquid temperature during the most recent performance test, or

(ii) All 3-hour periods of operation during which the average absorbing liquid specific gravity was more than 0.1 unit above, or more than 0.1 unit below, the average absorbing liquid specific gravity during the most recent performance test (unless monitoring of an alternative parameter, which is a measure of the degree of absorbing liquid saturation, is approved by the Administrator, in which case he will define appropriate parameter boundaries and periods of operation during which they are exceeded).

(2) Where a condenser is the final recovery device in a system, and where an organic compound monitoring device is not used, all 3-hour periods of operation during which the average exit (product side) condenser operating temperature was more than 6 °C (1 1 °F) above the average exit (product side) operating temperature during the most recent performance test.

(3) Where a carbon adsorber is the final recovery device in a system, and where an organic compound monitoring device is not used:

(i) All carbon bed regeneration cycles during which the total mass steam flow was more than 10 percent below the total mass steam flow during the most recent performance test, or

(ii) All carbon bed regeneration cycles during which the temperature of the carbon bed after regeneration (and after completion of any cooling cycle(s)) was more than 10 percent greater than the carbon bed temperature (in degrees Celsius) during the most recent performance test.

(4) Where an absorber, condenser, or carbon adsorber is the final recovery device in the recovery system and where an organic compound monitoring device is used, all 3-hour periods of operation during which the average organic compound concentration level or reading of organic compounds in the exhaust gases is more than 20 percent greater than the exhaust gas organic compound concentration level or reading measured by the monitoring device during the most recent performance test.

(h) Each owner or operator of an affected facility subject to the provisions of this subpart and seeking to demonstrate compliance with § 60.662(c) shall keep up-to-date, readily accessible records of:

(1) Any changes in production capacity, feedstock type, or catalyst type, or of any replacement, removal or addition of recovery equipment or a distillation unit;

(2) Any recalculation of the TRE index value performed pursuant to § 60.664(f); and

(3) The results of any performance test performed pursuant to the methods and procedures required by § 60.664(d).

(i) Each owner or operator of an affected facility that seeks to comply with the requirements of this subpart by complying with the flow rate cutoff in § 60.660(c)(6) shall keep up-to-date, readily accessible records to indicate that the vent stream flow rate is less than 0.008 m^3/min and of any change in equipment or process operation that increases the operating vent stream flow rate, including a measurement of the new vent stream flow rate.

(j) Each owner or operator of an affected facility that seeks to comply with the requirements of this subpart by complying with the design production capacity provision in § 60.660(c)(5)

shall keep up-to-date, readily accessible records of any change in equipment or process operation that increases the design production capacity of the process unit in which the affected facility is located.

(k) Each owner and operator subject to the provisions of this subpart is exempt from the quarterly reporting requirements contained in §60.7(c) of the General Provisions.

(l) Each owner or operator that seeks to comply with the requirements of this subpart by complying with the requirements of §60.660 (c)(4), (c)(5), or (c)(6) or §60.662 shall submit to the Administrator semiannual reports of the following recorded information. The initial report shall be submitted within 6 months after the initial start-up date.

(1) Exceedances of monitored parameters recorded under §60.665 (c) and (g).

(2) All periods recorded under §60.665(d) when the vent stream is diverted from the control device or has no flow rate.

(3) All periods recorded under §60.665(e) when the boiler or process heater was not operating.

(4) All periods recorded under §60.665(f) in which the pilot flame of the flare was absent.

(5) Any change in equipment or process operation that increases the operating vent stream flow rate above the low flow exemption level in §60.660(c)(6), including a measurement of the new vent stream flow rate, as recorded under §60.665(i). These must be reported as soon as possible after the change and no later than 180 days after the change. These reports may be submitted either in conjunction with semiannual reports or as a single separate report. A performance test must be completed with the same time period to verify the recalculated flow value and to obtain the vent stream characteristics of heating value and E_{TOC}. The performance test is subject to the requirements of §60.8 of the General Provisions. Unless the facility qualifies for an exemption under the low capacity exemption status in §60.660(c)(5), the facility must begin compliance with the requirements set forth in §60.662.

(6) Any change in equipment or process operation, as recorded under §60.665(j), that increases the design production capacity above the low capacity exemption level in §60.660(c)(5) and the new capacity resulting from the change for the distillation process unit containing the affected facility. These must be reported as soon as possible after the change and no later than 180 days after the change. These reports may be submitted either in conjunction with semiannual reports or as a single seperate report. A performance test must be completed within the same time period to obtain the vent stream flow rate, heating value, E_{TOC}. The performance test is subject to the requirements of §60.8 of the General Provisions. Unless the facility qualifies for an exemption under the low flow exemption in §60.660(c)(6), the facility must begin compliance with the requirements set forth in §60.662.

(7) Any recalculation of the TRE index value, as recorded under §60.665(h).

(m) The requirements of §60.665(l) remain in force until and unless EPA, in delegating enforcement authority to a State under section 111(c) of the Act, approves reporting requirements or an alternative means of compliance surveillance adopted by such State. In that event, affected sources within the State will be relieved of the obligation to comply with §60.665(l), provided that they comply with the requirements established by the State.

(n) Each owner or operator that seeks to demonstrate compliance with §60.660(c)(5) must submit to the Administrator an initial report detailing the design production capcity of the process unit.

(o) Each owner or operator that seeks to demonstrate compliance with §60.660(c)(6) must submit to the Administrator an initial report including a flow rate measurement using the test methods specified in §60.664.

(p) The Administrator will specify appropriate reporting and recordkeeping requirements where the owner or operator of an affected facility complies with the standards specified under

§ 60.662 other than as provided under § 60.663(a), (b), (c) and (d).

[55 FR 26922, June 29, 1990; 55 FR 36932, Sept. 7, 1990, as amended at 60 FR 58237, Nov. 27, 1995]

§ 60.666 Reconstruction.

For purposes of this subpart ''fixed capital cost of the new components,'' as used in § 60.15, includes the fixed capital cost of all depreciable components which are or will be replaced pursuant to all continuous programs of component replacement which are commenced within any 2-year period following December 30, 1983. For purposes of this paragraph, ''commenced'' means that an owner or operator has undertaken a continuous program of component replacement or that an owner or operator has entered into a contractual obligation to undertake and complete, within a reasonable time, a continuous program of component replacement.

§ 60.667 Chemicals affected by subpart NNN.

Chemical name	CAS No.*
Acetaldehyde	75–07–0
Acetaldol	107–89–1
Acetic acid	64–19–7
Acetic anhydride	108–24–7
Acetone	67–64–1
Acetone cyanohydrin	75–86–5
Acetylene	74–86–2
Acrylic acid	79–10–7
Acrylonitrile	107–13–1
Adipic acid	124–04–9
Adiponitrile	111–69–3
Alcohols, C–11 or lower, mixtures	
Alcohols, C–12 or higher, mixtures	
Allyl chloride	107–05–1
Amylene	513–35–9
Amylenes, mixed	
Aniline	62–53–3
Benzene	71–43–2
Benzenesulfonic acid	98–11–3
Benzenesulfonic acid C_{10-16}-alkyl derivatives, sodium salts	68081–81–2
Benzoic acid, tech	65–85–0
Benzyl chloride	100–44–7
Biphenyl	92–52–4
Bisphenol A	80–05–7
Brometone	76–08–4
1,3-Butadiene	106–99–0
Butadiene and butene fractions	
n-Butane	106–97–8
1,4-Butanediol	110–63–4
Butanes, mixed	
1-Butene	106–98–9
2-Butene	25167–67–3
Butenes, mixed	
n-Butyl acetate	123–86–4
Butyl acrylate	141–32–2
n-Butyl alcohol	71–36–3
sec-Butyl alcohol	78–92–2
tert-Butyl alcohol	75–65–0
Butylbenzyl phthalate	85–68–7
Butylene glycol	107–88–0
tert-Butyl hydroperoxide	75–91–2
2-Butyne-1,4-diol	110–65–6
Butyraldehyde	123–72–8
Butyric anhydride	106–31–0
Caprolactam	105–60–2
Carbon disulfide	75–15–0
Carbon tetrabromide	558–13–4
Carbon tetrachloride	56–23–5
Chlorobenzene	108–90–7
2-Chloro-4-(ethylamino)-6-(isopropylamino)-s-triazine	1912–24–9
Chloroform	67–66–3
p-Chloronitrobenzene	100–00–5
Chloroprene	126–99–8
Citric acid	77–92–9
Crotonaldehyde	4170–30–0
Crotonic acid	3724–65–0
Cumene	98–82–8
Cumene hydroperoxide	80–15–9
Cyanuric chloride	108–77–0
Cyclohexane	110–82–7
Cyclohexane, oxidized	68512–15–2
Cyclohexanol	108–93–0
Cyclohexanone	108–94–1
Cyclohexanone oxime	100–64–1
Cyclohexene	110–83–8
1,3-Cyclopentadiene	542–92–7
Cyclopropane	75–19–4
Diacetone alcohol	123–42–2
Dibutanized aromatic concentrate	
1,4-Dichlorobutene	110–57–6
3,4-Dichloro-1-butene	64037–54–3
Dichlorodifluoromethane	75–71–8
Dichlorodimethylsilane	75–78–5
Dichlorofluoromethane	75–43–4
-Dichlorohydrin	96–23–1
Diethanolamine	111–42–2
Diethylbenzene	25340–17–4
Diethylene glycol	111–46–6
Di-n-heptyl-n-nonyl undecyl phthalate	85–68–7
Di-isodecyl phthalate	26761–40–0
Diisononyl phthalate	28553–12–0
Dimethylamine	124–40–3
Dimethyl terephthalate	120–61–6
2,4-Dinitrotoluene	121–14–2
2,4-(and 2,6)-dinitrotoluene	121–14–2 606–20–2
Dioctyl phthalate	117–81–7
Dodecene	25378–22–7
Dodecylbenzene, non linear	
Dodecylbenzenesulfonic acid	27176–87–0
Dodecylbenzenesulfonic acid, sodium salt	25155–30–0
Epichlorohydrin	106–89–8
Ethanol	64–17–5
Ethanolamine	141–43–5
Ethyl acetate	141–78–6
Ethyl acrylate	140–88–5
Ethylbenzene	100–41–4
Ethyl chloride	75–00–3
Ethyl cyanide	107–12–0
Ethylene	74–85–1
Ethylene dibromide	106–93–4
Ethylene dichloride	107–06–2
Ethylene glycol	107–21–1
Ethylene glycol monobutyl	111–76–2
Ethylene glycol monoethyl ether	110–80–5
Ethylene glycol monoethyl ether acetate	111–15–9
Ethylene glycol monomethyl ether	109–86–4
Ethylene oxide	75–21–8
2-Ethylhexanal	26266–68–2
2-Ethylhexyl alcohol	104–76–7
(2-Ethylhexyl) amine	104–75–6

Chemical name	CAS No.*
Ethylmethylbenzene	25550–14–5
6-Ethyl-1,2,3,4-tetrahydro 9,10-anthracenedione	15547–17–8
Formaldehyde	50–00–0
Glycerol	56–81–5
n-Heptane	142–82–5
Heptenes (mixed)	
Hexadecyl chloride	
Hexamethylene diamine	124–09–4
Hexamethylene diamine adipate	3323–53–3
Hexamethylenetetramine	100–97–0
Hexane	110–54–3
2-Hexenedinitrile	13042–02–9
3-Hexenedinitrile	1119–85–3
Hydrogen cyanide	74–90–8
Isobutane	75–28–5
Isobutanol	78–83–1
Isobutylene	115–11–7
Isobutyraldehyde	78–84–2
Isodecyl alcohol	25339–17–7
Isooctyl alcohol	26952–21–6
Isopentane	78–78–4
Isophthalic acid	121–91–5
Isoprene	78–79–5
Isopropanol	67–63–0
Ketene	463–51–4
Linear alcohols, ethoxylated, mixed	
Linear alcohols, ethoxylated, and sulfated, sodium salt, mixed	
Linear alcohols, sulfated, sodium salt, mixed	
Linear alkylbenzene	123–01–3
Magnesium acetate	142–72–3
Maleic anhydride	108–31–6
Melamine	108–78–1
Mesityl oxide	141–79–7
Methacrylonitrile	126–98–7
Methanol	67–56–1
Methylamine	74–89–5
ar-Methylbenzenediamine	25376–45–8
Methyl chloride	74–87–3
Methylene chloride	75–09–2
Methyl ethyl ketone	78–93–3
Methyl iodide	74–88–4
Methyl isobutyl ketone	108–10–1
Methyl methacrylate	80–62–6
2-Methylpentane	107–83–5
1-Methyl-2-pyrrolidone	872–50–4
Methyl tert-butyl ether	
Naphthalene	91–20–3
Nitrobenzene	98–95–3
1-Nonene	27215–95–8
Nonyl alcohol	143–08–8
Nonylphenol	25154–52–3
Nonylphenol, ethoxylated	9016–45–9
Octene	25377–83–7
Oil-soluble petroleum sulfonate, calcium salt	
Oil-soluble petroleum sulfonate, sodium salt	
Pentaerythritol	115–77–5
n-Pentane	109–66–0
3-Pentenenitrile	4635–87–4
Pentenes, mixed	109–67–1
Perchloroethylene	127–18–4
Phenol	108–95–2
1-Phenylethyl hydroperoxide	3071–32–7
Phenylpropane	103–65–1
Phosgene	75–44–5
Phthalic anhydride	85–44–9
Propane	74–98–6
Propionaldehyde	123–38–6
Propionic acid	79–09–4
Propyl alcohol	71–23–8
Propylene	115–07–1
Propylene chlorohydrin	78–89–7
Propylene glycol	57–55–6
Propylene oxide	75–56–9
Sodium cyanide	143–33–9
Sorbitol	50–70–4
Styrene	100–42–5
Terephthalic acid	100–21–0
1,1,2,2-Tetrachloroethane	79–34–5
Tetraethyl lead	78–00–2
Tetrahydrofuran	109–99–9
Tetra (methyl-ethyl) lead	
Tetramethyl lead	75–74–1
Toluene	108–88–3
Toluene-2,4-diamine	95–80–7
Toluene-2,4-(and, 2,6)-diisocyanate (80/20 mixture)	26471–62–5
Tribromomethane	75–25–2
1,1,1-Trichloroethane	71–55–6
1,1,2-Trichloroethane	79–00–5
Trichloroethylene	79–01–6
Trichlorofluoromethane	75–69–4
1,1,2-Trichloro-1,2,2-trifluoroethane	76–13–1
Triethanolamine	102–71–6
Triethylene glycol	112–27–6
Vinyl acetate	108–05–4
Vinyl chloride	75–01–4
Vinylidene chloride	75–35–4
m-Xylene	108–38–3
o-Xylene	95–47–6
p-Xylene	106–42–3
Xylenes (mixed)	1330–20–7
m-Xylenol	576–26–1

*CAS numbers refer to the Chemical Abstracts Registry numbers assigned to specific chemicals, isomers, or mixtures of chemicals. Some isomers or mixtures that are covered by the standards do not have CAS numbers assigned to them. The standards apply to all of the chemicals listed, whether CAS numbers have been assigned or not.

[55 FR 26942, June 29, 1990, as amended at 60 FR 58237, 58238, Nov. 27, 1995]

§ 60.668 Delegation of authority.

(a) In delegating implementation and enforcement authority to a State under §111(c) of the Act, the authorities contained in paragraph (b) of this section shall be retained by the Administrator and not transferred to a State.

(b) Authorities which will not be delegated to States: §60.663(e).

Subpart OOO—Standards of Performance for Nonmetallic Mineral Processing Plants

SOURCE: 51 FR 31337, Aug. 1, 1985, unless otherwise noted.

§ 60.670 Applicability and designation of affected facility.

(a)(1) Except as provided in paragraphs (a)(2), (b), (c), and (d) of this section, the provisions of this subpart are applicable to the following affected facilities in fixed or portable nonmetallic mineral processing plants: each

crusher, grinding mill, screening operation, bucket elevator, belt conveyor, bagging operation, storage bin, enclosed truck or railcar loading station. Also, crushers and grinding mills at hot mix asphalt facilities that reduce the size of nonmetallic minerals embedded in recycled asphalt pavement and subsequent affected facilities up to, but not including, the first storage silo or bin are subject to the provisions of this subpart.

(2) The provisions of this subpart do not apply to the following operations: All facilities located in underground mines; and stand-alone screening operations at plants without crushers or grinding mills.

(b) An affected facility that is subject to the provisions of subpart F or I or that follows in the plant process any facility subject to the provisions of subparts F or I of this part is not subject to the provisions of this subpart.

(c) Facilities at the following plants are not subject to the provisions of this subpart:

(1) Fixed sand and gravel plants and crushed stone plants with capacities, as defined in §60.671, of 23 megagrams per hour (25 tons per hour) or less;

(2) Portable sand and gravel plants and crushed stone plants with capacities, as defined in §60.671, of 136 megagrams per hour (150 tons per hour) or less; and

(3) Common clay plants and pumice plants with capacities, as defined in §60.671, of 9 megagrams per hour (10 tons per hour) or less.

(d)(1) When an existing facility is replaced by a piece of equipment of equal or smaller size, as defined in §60.671, having the same function as the existing facility, the new facility is exempt from the provisions of §§60.672, 60.674, and 60.675 except as provided for in paragraph (d)(3) of this section.

(2) An owner or operator complying with paragraph (d)(1) of this section shall submit the information required in §60.676(a).

(3) An owner or operator replacing all existing facilities in a production line with new facilities does not qualify for the exemption described in paragraph (d)(1) of this section and must comply with the provisions of §§60.672, 60.674 and 60.675.

(e) An affected facility under paragraph (a) of this section that commences construction, reconstruction, or modification after August 31, 1983 is subject to the requirements of this part.

(f) Table 1 of this subpart specifies the provisions of subpart A of this part 60 that apply and those that do not apply to owners and operators of affected facilities subject to this subpart.

TABLE 1—APPLICABILITY OF SUBPART A TO SUBPART OOO

Subpart A reference	Applies to Subpart OOO	Comment
60.1, Applicability	Yes.	
60.2, Definitions	Yes.	
60.3, Units and abbreviations	Yes.	
60.4, Address:		
(a)	Yes.	
(b)	Yes.	
60.5, Determination of construction or modification.	Yes.	
60.6, Review of plans	Yes.	
60.7, Notification and recordkeeping	Yes	Except in (a)(2) report of anticipated date of initial startup is not required (§60.676(h)).
60.8, Performance tests	Yes	Except in (d), after 30 days notice for an initially scheduled performance test, any rescheduled performance test requires 7 days notice, not 30 days (§60.675(g)).
60.9, Availability of information	Yes.	
60.10, State authority	Yes.	
60.11, Compliance with standards and maintenance requirements.	Yes	Except in (b) under certain conditions (§§60.675 (c)(3) and (c)(4)), Method 9 observation may be reduced from 3 hours to 1 hour. Some affected facilities exempted from Method 9 tests (§60.675(h)).
60.12, Circumvention	Yes.	
60.13, Monitoring requirements	Yes.	
60.14, Modification	Yes.	
60.15, Reconstruction	Yes.	

TABLE 1—APPLICABILITY OF SUBPART A TO SUBPART OOO—Continued

Subpart A reference	Applies to Subpart OOO	Comment
60.16, Priority list	Yes.	
60.17, Incorporations by reference	Yes.	
60.18, General control device	No	Flares will not be used to comply with the emission limits.
60.19, General notification and reporting requirements.	Yes.	

[51 FR 31337, Aug. 1, 1985, as amended at 62 FR 31359, June 9, 1997]

§ 60.671 Definitions.

All terms used in this subpart, but not specifically defined in this section, shall have the meaning given them in the Act and in subpart A of this part.

Bagging operation means the mechanical process by which bags are filled with nonmetallic minerals.

Belt conveyor means a conveying device that transports material from one location to another by means of an endless belt that is carried on a series of idlers and routed around a pulley at each end.

Bucket elevator means a conveying device of nonmetallic minerals consisting of a head and foot assembly which supports and drives an endless single or double strand chain or belt to which buckets are attached.

Building means any frame structure with a roof.

Capacity means the cumulative rated capacity of all initial crushers that are part of the plant.

Capture system means the equipment (including enclosures, hoods, ducts, fans, dampers, etc.) used to capture and transport particulate matter generated by one or more process operations to a control device.

Control device means the air pollution control equipment used to reduce particulate matter emissions released to the atmosphere from one or more process operations at a nonmetallic mineral processing plant.

Conveying system means a device for transporting materials from one piece of equipment or location to another location within a plant. Conveying systems include but are not limited to the following: Feeders, belt conveyors, bucket elevators and pneumatic systems.

Crusher means a machine used to crush any nonmetallic minerals, and includes, but is not limited to, the following types: jaw, gyratory, cone, roll, rod mill, hammermill, and impactor.

Enclosed truck or railcar loading station means that portion of a nonmetallic mineral processing plant where nonmetallic minerals are loaded by an enclosed conveying system into enclosed trucks or railcars.

Fixed plant means any nonmetallic mineral processing plant at which the processing equipment specified in § 60.670(a) is attached by a cable, chain, turnbuckle, bolt or other means (except electrical connections) to any anchor, slab, or structure including bedrock.

Fugitive emission means particulate matter that is not collected by a capture system and is released to the atmosphere at the point of generation.

Grinding mill means a machine used for the wet or dry fine crushing of any nonmetallic mineral. Grinding mills include, but are not limited to, the following types: hammer, roller, rod, pebble and ball, and fluid energy. The grinding mill includes the air conveying system, air separator, or air classifier, where such systems are used.

Initial crusher means any crusher into which nonmetallic minerals can be fed without prior crushing in the plant.

Nonmetallic mineral means any of the following minerals or any mixture of which the majority is any of the following minerals:

(a) Crushed and Broken Stone, including Limestone, Dolomite, Granite, Traprock, Sandstone, Quartz, Quartzite, Marl, Marble, Slate, Shale, Oil Shale, and Shell.

(b) Sand and Gravel.

(c) Clay including Kaolin, Fireclay, Bentonite, Fuller's Earth, Ball Clay, and Common Clay.

(d) Rock Salt.

(e) Gypsum.

(f) Sodium Compounds, including Sodium Carbonate, Sodium Chloride, and Sodium Sulfate.
(g) Pumice.
(h) Gilsonite.
(i) Talc and Pyrophyllite.
(j) Boron, including Borax, Kernite, and Colemanite.
(k) Barite.
(l) Fluorospar.
(m) Feldspar.
(n) Diatomite.
(o) Perlite.
(p) Vermiculite.
(q) Mica.
(r) Kyanite, including Andalusite, Sillimanite, Topaz, and Dumortierite.

Nonmetallic mineral processing plant means any combination of equipment that is used to crush or grind any nonmetallic mineral wherever located, including lime plants, power plants, steel mills, asphalt concrete plants, portland cement plants, or any other facility processing nonmetallic minerals except as provided in § 60.670 (b) and (c).

Portable plant means any nonmetallic mineral processing plant that is mounted on any chassis or skids and may be moved by the application of a lifting or pulling force. In addition, there shall be no cable, chain, turnbuckle, bolt or other means (except electrical connections) by which any piece of equipment is attached or clamped to any anchor, slab, or structure, including bedrock that must be removed prior to the application of a lifting or pulling force for the purpose of transporting the unit.

Production line means all affected facilities (crushers, grinding mills, screening operations, bucket elevators, belt conveyors, bagging operations, storage bins, and enclosed truck and railcar loading stations) which are directly connected or are connected together by a conveying system.

Screening operation means a device for separating material according to size by passing undersize material through one or more mesh surfaces (screens) in series, and retaining oversize material on the mesh surfaces (screens).

Size means the rated capacity in tons per hour of a crusher, grinding mill, bucket elevator, bagging operation, or enclosed truck or railcar loading station; the total surface area of the top screen of a screening operation; the width of a conveyor belt; and the rated capacity in tons of a storage bin.

Stack emission means the particulate matter that is released to the atmosphere from a capture system.

Storage bin means a facility for storage (including surge bins) or nonmetallic minerals prior to further processing or loading.

Transfer point means a point in a conveying operation where the nonmetallic mineral is transferred to or from a belt conveyor except where the nonmetallic mineral is being transferred to a stockpile.

Truck dumping means the unloading of nonmetallic minerals from movable vehicles designed to transport nonmetallic minerals from one location to another. Movable vehicles include but are not limited to: trucks, front end loaders, skip hoists, and railcars.

Vent means an opening through which there is mechanically induced air flow for the purpose of exhausting from a building air carrying particulate matter emissions from one or more affected facilities.

Wet mining operation means a mining or dredging operation designed and operated to extract any nonmetallic mineral regulated under this subpart from deposits existing at or below the water table, where the nonmetallic mineral is saturated with water.

Wet screening operation means a screening operation at a nonmetallic mineral processing plant which removes unwanted material or which separates marketable fines from the product by a washing process which is designed and operated at all times such that the product is saturated with water.

[51 FR 31337, Aug. 1, 1985, as amended at 62 FR 31359, June 9, 1997]

§ 60.672 Standard for particulate matter.

(a) On and after the date on which the performance test required to be conducted by § 60.8 is completed, no owner or operator subject to the provisions of this subpart shall cause to be discharged into the atmosphere from any transfer point on belt conveyors or from any other affected facility any stack emissions which:

(1) Contain particulate matter in excess of 0.05 g/dscm; and

(2) Exhibit greater than 7 percent opacity, unless the stack emissions are discharged from an affected facility using a wet scrubbing control device. Facilities using a wet scrubber must comply with the reporting provisions of § 60.676 (c), (d), and (e).

(b) On and after the sixtieth day after achieving the maximum production rate at which the affected facility will be operated, but not later than 180 days after initial startup as required under § 60.11 of this part, no owner or operator subject to the provisions of this subpart shall cause to be discharged into the atmosphere from any transfer point on belt conveyors or from any other affected facility any fugitive emissions which exhibit greater than 10 percent opacity, except as provided in paragraphs (c), (d), and (e) of this section.

(c) On and after the sixtieth day after achieving the maximum production rate at which the affected facility will be operated, but not later than 180 days after initial startup as required under § 60.11 of this part, no owner or operator shall cause to be discharged into the atmosphere from any crusher, at which a capture system is not used, fugitive emissions which exhibit greater than 15 percent opacity.

(d) Truck dumping of nonmetallic minerals into any screening operation, feed hopper, or crusher is exempt from the requirements of this section.

(e) If any transfer point on a conveyor belt or any other affected facility is enclosed in a building, then each enclosed affected facility must comply with the emission limits in paragraphs (a), (b) and (c) of this section, or the building enclosing the affected facility or facilities must comply with the following emission limits:

(1) No owner or operator shall cause to be discharged into the atmosphere from any building enclosing any transfer point on a conveyor belt or any other affected facility any visible fugitive emissions except emissions from a vent as defined in § 60.671.

(2) No owner or operator shall cause to be discharged into the atmosphere from any vent of any building enclosing any transfer point on a conveyor belt or any other affected facility emissions which exceed the stack emissions limits in paragraph (a) of this section.

(f) On and after the sixtieth day after achieving the maximum production rate at which the affected facility will be operated, but not later than 180 days after initial startup as required under § 60.11 of this part, no owner or operator shall cause to be discharged into the atmosphere from any baghouse that controls emissions from only an individual, enclosed storage bin, stack emissions which exhibit greater than 7 percent opacity.

(g) Owners or operators of multiple storage bins with combined stack emissions shall comply with the emission limits in paragraph (a)(1) and (a)(2) of this section.

(h) On and after the sixtieth day after achieving the maximum production rate at which the affected facility will be operated, but not later than 180 days after initial startup, no owner or operator shall cause to be discharged into the atmosphere any visible emissions from:

(1) Wet screening operations and subsequent screening operations, bucket elevators, and belt conveyors that process saturated material in the production line up to the next crusher, grinding mill or storage bin.

(2) Screening operations, bucket elevators, and belt conveyors in the production line downstream of wet mining operations, where such screening operations, bucket elevators, and belt conveyors process saturated materials up to the first crusher, grinding mill, or storage bin in the production line.

[51 FR 31337, Aug. 1, 1985, as amended at 62 FR 31359, June 9, 1997]

§ 60.673 Reconstruction.

(a) The cost of replacement of ore-contact surfaces on processing equipment shall not be considered in calculating either the ''fixed capital cost of the new components'' or the ''fixed capital cost that would be required to construct a comparable new facility'' under § 60.15. Ore-contact surfaces are crushing surfaces; screen meshes, bars, and plates; conveyor belts; and elevator buckets.

(b) Under § 60.15, the ''fixed capital cost of the new components'' includes

the fixed capital cost of all depreciable components (except components specified in paragraph (a) of this section) which are or will be replaced pursuant to all continuous programs of component replacement commenced within any 2-year period following August 31, 1983.

§ 60.674 Monitoring of operations.

The owner or operator of any affected facility subject to the provisions of this subpart which uses a wet scrubber to control emissions shall install, calibrate, maintain and operate the following monitoring devices:

(a) A device for the continuous measurement of the pressure loss of the gas stream through the scrubber. The monitoring device must be certified by the manufacturer to be accurate within ±250 pascals ±1 inch water gauge pressure and must be calibrated on an annual basis in accordance with manufacturer's instructions.

(b) A device for the continuous measurement of the scrubbing liquid flow rate to the wet scrubber. The monitoring device must be certified by the manufacturer to be accurate within ±5 percent of design scrubbing liquid flow rate and must be calibrated on an annual basis in accordance with manufacturer's instructions.

§ 60.675 Test methods and procedures.

(a) In conducting the performance tests required in § 60.8, the owner or operator shall use as reference methods and procedures the test methods in appendix A of this part or other methods and procedures as specified in this section, except as provided in § 60.8(b). Acceptable alternative methods and procedures are given in paragraph (e) of this section.

(b) The owner or operator shall determine compliance with the particulate matter standards in § 60.672(a) as follows:

(1) Method 5 or Method 17 shall be used to determine the particulate matter concentration. The sample volume shall be at least 1.70 dscm (60 dscf). For Method 5, if the gas stream being sampled is at ambient temperature, the sampling probe and filter may be operated without heaters. If the gas stream is above ambient temperature, the sampling probe and filter may be operated at a temperature high enough, but no higher than 121 °C (250 °F), to prevent water condensation on the filter.

(2) Method 9 and the procedures in § 60.11 shall be used to determine opacity.

(c)(1) In determining compliance with the particulate matter standards in § 60.672 (b) and (c), the owner or operator shall use Method 9 and the procedures in § 60.11, with the following additions:

(i) The minimum distance between the observer and the emission source shall be 4.57 meters (15 feet).

(ii) The observer shall, when possible, select a position that minimizes interference from other fugitive emission sources (e.g., road dust). The required observer position relative to the sun (Method 9, Section 2.1) must be followed.

(iii) For affected facilities using wet dust suppression for particulate matter control, a visible mist is sometimes generated by the spray. The water mist must not be confused with particulate matter emissions and is not to be considered a visible emission. When a water mist of this nature is present, the observation of emissions is to be made at a point in the plume where the mist is no longer visible.

(2) In determining compliance with the opacity of stack emissions from any baghouse that controls emissions only from an individual enclosed storage bin under § 60.672(f) of this subpart, using Method 9, the duration of the Method 9 observations shall be 1 hour (ten 6-minute averages).

(3) When determining compliance with the fugitive emissions standard for any affected facility described under § 60.672(b) of this subpart, the duration of the Method 9 observations may be reduced from 3 hours (thirty 6-minute averages) to 1 hour (ten 6-minute averages) only if the following conditions apply:

(i) There are no individual readings greater than 10 percent opacity; and

(ii) There are no more than 3 readings of 10 percent for the 1-hour period.

(4) When determining compliance with the fugitive emissions standard for any crusher at which a capture system is not used as described under

§ 60.672(c) of this subpart, the duration of the Method 9 observations may be reduced from 3 hours (thirty 6-minute averages) to 1 hour (ten 6-minute averages) only if the following conditions apply:

(i) There are no individual readings greater than 15 percent opacity; and

(ii) There are no more than 3 readings of 15 percent for the 1-hour period.

(d) In determining compliance with § 60.672(e), the owner or operator shall use Method 22 to determine fugitive emissions. The performance test shall be conducted while all affected facilities inside the building are operating. The performance test for each building shall be at least 75 minutes in duration, with each side of the building and the roof being observed for at least 15 minutes.

(e) The owner or operator may use the following as alternatives to the reference methods and procedures specified in this section:

(1) For the method and procedure of paragraph (c) of this section, if emissions from two or more facilities continuously interfere so that the opacity of fugitive emissions from an individual affected facility cannot be read, either of the following procedures may be used:

(i) Use for the combined emission stream the highest fugitive opacity standard applicable to any of the individual affected facilities contributing to the emissions stream.

(ii) Separate the emissions so that the opacity of emissions from each affected facility can be read.

(f) To comply with § 60.676(d), the owner or operator shall record the measurements as required in § 60.676(c) using the monitoring devices in § 60.674 (a) and (b) during each particulate matter run and shall determine the averages.

(g) If, after 30 days notice for an initially scheduled performance test, there is a delay (due to operational problems, etc.) in conducting any rescheduled performance test required in this section, the owner or operator of an affected facility shall submit a notice to the Administrator at least 7 days prior to any rescheduled performance test.

(h) Initial Method 9 performance tests under § 60.11 of this part and § 60.675 of this subpart are not required for:

(1) Wet screening operations and subsequent screening operations, bucket elevators, and belt conveyors that process saturated material in the production line up to, but not including the next crusher, grinding mill or storage bin.

(2) Screening operations, bucket elevators, and belt conveyors in the production line downstream of wet mining operations, that process saturated materials up to the first crusher, grinding mill, or storage bin in the production line.

[54 FR 6680, Feb. 14, 1989, as amended at 62 FR 31360, June 9, 1997]

§ 60.676 Reporting and recordkeeping.

(a) Each owner or operator seeking to comply with § 60.670(d) shall submit to the Administrator the following information about the existing facility being replaced and the replacement piece of equipment.

(1) For a crusher, grinding mill, bucket elevator, bagging operation, or enclosed truck or railcar loading station:

(i) The rated capacity in tons per hour of the existing facility being replaced and

(ii) The rated capacity in tons per hour of the replacement equipment.

(2) For a screening operation:

(i) The total surface area of the top screen of the existing screening operation being replaced and

(ii) The total surface area of the top screen of the replacement screening operation.

(3) For a conveyor belt:

(i) The width of the existing belt being replaced and

(ii) The width of the replacement conveyor belt.

(4) For a storage bin:

(i) The rated capacity in tons of the existing storage bin being replaced and

(ii) The rated capacity in tons of replacement storage bins.

(b) [Reserved]

(c) During the initial performance test of a wet scrubber, and daily thereafter, the owner or operator shall record the measurements of both the

change in pressure of the gas stream across the scrubber and the scrubbing liquid flow rate.

(d) After the initial performance test of a wet scrubber, the owner or operator shall submit semiannual reports to the Administrator of occurrences when the measurements of the scrubber pressure loss (or gain) and liquid flow rate differ by more than ±30 percent from the averaged determined during the most recent performance test.

(e) The reports required under paragraph (d) shall be postmarked within 30 days following end of the second and fourth calendar quarters.

(f) The owner or operator of any affected facility shall submit written reports of the results of all performance tests conducted to demonstrate compliance with the standards set forth in §60.672 of this subpart, including reports of opacity observations made using Method 9 to demonstrate compliance with §60.672(b), (c), and (f), and reports of observations using Method 22 to demonstrate compliance with §60.672(e).

(g) The owner or operator of any screening operation, bucket elevator, or belt conveyor that processes saturated material and is subject to §60.672(h) and subsequently processes unsaturated materials, shall submit a report of this change within 30 days following such change. This screening operation, bucket elevator, or belt conveyor is then subject to the 10 percent opacity limit in §60.672(b) and the emission test requirements of §60.11 and this subpart. Likewise a screening operation, bucket elevator, or belt conveyor that processes unsaturated material but subsequently processes saturated material shall submit a report of this change within 30 days following such change. This screening operation, bucket elevator, or belt conveyor is then subject to the no visible emission limit in §60.672(h).

(h) The subpart A requirement under §60.7(a)(2) for notification of the anticipated date of initial startup of an affected facility shall be waived for owners or operators of affected facilities regulated under this subpart.

(i) A notification of the actual date of initial startup of each affected facility shall be submitted to the Administrator.

(1) For a combination of affected facilities in a production line that begin actual initial startup on the same day, a single notification of startup may be submitted by the owner or operator to the Administrator. The notification shall be postmarked within 15 days after such date and shall include a description of each affected facility, equipment manufacturer, and serial number of the equipment, if available.

(2) For portable aggregate processing plants, the notification of the actual date of initial startup shall include both the home office and the current address or location of the portable plant.

(j) The requirements of this section remain in force until and unless the Agency, in delegating enforcement authority to a State under section 111(c) of the Act, approves reporting requirements or an alternative means of compliance surveillance adopted by such States. In that event, affected facilities within the State will be relieved of the obligation to comply with the reporting requirements of this section, provided that they comply with requirements established by the State.

[51 FR 31337, Aug. 1, 1985, as amended at 54 FR 6680, Feb. 14, 1989; 62 FR 31360, June 9, 1997]

Subpart PPP—Standard of Performance for Wool Fiberglass Insulation Manufacturing Plants

SOURCE: 50 FR 7699, Feb. 25, 1985, unless otherwise noted.

§ 60.680 Applicability and designation of affected facility.

(a) The affected facility to which the provisions of this subpart apply is each rotary spin wool fiberglass insulation manufacturing line.

(b) The owner or operator of any facility under paragraph (a) of this section that commences construction, modification, or reconstruction after February 7, 1984, is subject to the requirements of this subpart.

§ 60.681 Definitions.

As used in this subpart, all terms not defined herein shall have the meaning given them in the Act and in subpart A of this part.

Glass pull rate means the mass of molten glass utilized in the manufacture of wool fiberglass insulation at a single manufacturing line in a specified time period.

Manufacturing line means the manufacturing equipment comprising the forming section, where molten glass is fiberized and a fiberglass mat is formed; the curing section, where the binder resin in the mat is thermally ''set;'' and the cooling section, where the mat is cooled.

Rotary spin means a process used to produce wool fiberglass insulation by forcing molten glass through numerous small orifices in the side wall of a spinner to form continuous glass fibers that are then broken into discrete lengths by high velocity air flow.

Wool fiberglass insulation means a thermal insulation material composed of glass fibers and made from glass produced or melted at the same facility where the manufacturing line is located.

§ 60.682 Standard for particulate matter.

On and after the date on which the performance test required to be conducted by § 60.8 is completed, no owner or operator subject to the provisions of this subpart shall cause to be discharged into the atmosphere from any affected facility any gases which contain particulate matter in excess of 5.5 kg/Mg (11.0 1b/ton) of glass pulled.

§ 60.683 Monitoring of operations.

(a) An owner or operator subject to the provisions of this subpart who uses a wet scrubbing control device to comply with the mass emission standard shall install, calibrate, maintain, and operate monitoring devices that measure the gas pressure drop across each scrubber and the scrubbing liquid flow rate to each scrubber. The pressure drop monitor is to be certified by its manufacturer to be accurate within ±250 pascals (±1 inch water gauge) over its operating range, and the flow rate monitor is to be certified by its manufacturer to be accurate within ±5 percent over its operating range.

(b) An owner or operator subject to the provisions of this subpart who uses a wet electrostatic precipitator control device to comply with the mass emission standard shall install, calibrate, maintain, and operate monitoring devices that measure the primary and secondary current (amperes) and voltage in each electrical field and the inlet water flow rate. In addition, the owner or operator shall determine the total residue (total solids) content of the water entering the control device once per day using Method 209A, ''Total Residue Dried at 103–105 ° C,'' in *Standard Methods for the Examination of Water and Wastewater,* 15th Edition, 1980 (incorporated by reference—see § 60.17). Total residue shall be reported as percent by weight. All monitoring devices required under this paragraph are to be certified by their manufacturers to be accurate within ±5 percent over their operating range.

(c) All monitoring devices required under this section are to be recalibrated quarterly in accordance with procedures under § 60.13(b).

§ 60.684 Recordkeeping and reporting requirements.

(a) At 30-minute intervals during each 2-hour test run of each performance test of a wet scrubber control device and at least once every 4 hours thereafter, the owner or operator shall record the measurements required by § 60.683(a).

(b) At 30-minute intervals during each 2-hour test run of each performance test of a wet electrostatic precipitator control device and at least once every 4 hours thereafter, the owner or operator shall record the measurements required by § 60.683(b), except that the concentration of total residue in the water shall be recorded once during each performance test and once per day thereafter.

(c) Records of the measurements required in paragraphs (a) and (b) of this section must be retained for at least 2 years.

(d) Each owner or operator shall submit written semiannual reports of exceedances of control device operating parameters required to be monitored

by paragraphs (a) and (b) of this section and written documentation of, and a report of corrective maintenance required as a result of, quarterly calibrations of the monitoring devices required in §60.683(c). For the purpose of these reports, exceedances are defined as any monitoring data that are less than 70 percent of the lowest value or greater than 130 percent of the highest value of each operating parameter recorded during the most recent performance test.

(e) The requirements of this section remain in force until and unless the Agency, in delegating enforcement authority to a State under section 111(c) of the Act, approves reporting requirements or an alternative means of compliance surveillance adopted by such State. In that event, affected facilities within the State will be relieved of the obligation to comply with this section, provided that they comply with the requirements established by the State.

§ 60.685 Test methods and procedures.

(a) In conducting the performance tests required in §60.8, the owner or operator shall use as reference methods and procedures the test methods in appendix A of this part or other methods and procedures as specified in this section, except as provided in §60.8(b).

(b) The owner or operator shall conduct performance tests while the product with the highest loss on ignition (LOI) expected to be produced by the affected facility is being manufactured.

(c) The owner or operator shall determine compliance with the particulate matter standard in §60.682 as follows:

(1) The emission rate (E) of particulate matter shall be computed for each run using the following equation:

$$E=(C_t\ Q_{sd})/(P_{avg}\ K)$$

where:

E=emission rate of particulate matter, kg/Mg (lb/ton).
C_t=concentration of particulate matter, g/dscm (g/dscf).
Q_{sd}=volumetric flow rate of effluent gas, dscm/hr (dscf/hr).
P_{avg}=average glass pull rate, Mg/hr (ton/hr).
K=conversion factor, 1000 g/kg (453.6 g/lb).

(2) Method 5E shall be used to determine the particulate matter concentration (C_t) and the volumetric flow rate (Q_{sd}) of the effluent gas. The sampling time and sample volume shall be at least 120 minutes and 2.55 dscm (90 dscf).

(3) The average glass pull rate (P_{avg}) for the manufacturing line shall be the arithmetic average of three glass pull rate (P_i) determinations taken at intervals of at least 30 minutes during each run.

The individual glass pull rates (P_i) shall be computed using the following equation:

$$P_i=K'\ L_s\ W_m\ M\ [1.0-(LOI/100)]$$

where:

P_i=glass pull rate at interval ''i'', Mg/hr (ton/hr).
L_s=line speed, m/min (ft/min).
W_m=trimmed mat width, m (ft).
M=mat gram weight, g/m^2 (lb/ft^2).
LOI=loss on ignition, weight percent.
K'=conversion factor, 6×10^{-5} (min-Mg)/(hr-g) [3×10^{-2} (min-ton)/(hr-lb)].

(i) ASTM Standard Test Method D2584–68 (Reapproved 1979) (incorporated by reference—see §60.17), shall be used to determine the LOI for each run.

(ii) Line speed (L_s), trimmed mat width (W_m), and mat gram weight (M) shall be determined for each run from the process information or from direct measurements.

(d) To comply with §60.684(d), the owner or operator shall record measurements as required in §60.684 (a) and (b) using the monitoring devices in §60.683 (a) and (b) during the particulate matter runs.

[54 FR 6680, Feb. 14, 1989]

Subpart QQQ—Standards of Performance for VOC Emissions From Petroleum Refinery Wastewater Systems

SOURCE: 53 FR 47623, Nov. 23, 1988, unless otherwise noted.

§ 60.690 Applicability and designation of affected facility.

(a)(1) The provisions of this subpart apply to affected facilities located in petroleum refineries for which construction, modification, or reconstruction is commenced after May 4, 1987.

(2) An individual drain system is a separate affected facility.

(3) An oil-water separator is a separate affected facility.

(4) An aggregate facility is a separate affected facility.

(b) Notwithstanding the provisions of 40 CFR 60.14(e)(2), the construction or installation of a new individual drain system shall constitute a modification to an affected facility described in § 60.690(a)(4). For purposes of this paragraph, a new individual drain system shall be limited to all process drains and the first common junction box.

§ 60.691 Definitions.

As used in this subpart, all terms not defined herein shall have the meaning given them in the Act or in subpart A of 40 CFR part 60, and the following terms shall have the specific meanings given them.

Active service means that a drain is receiving refinery wastewater from a process unit that will continuously maintain a water seal.

Aggregate facility means an individual drain system together with ancillary downstream sewer lines and oil-water separators, down to and including the secondary oil-water separator, as applicable.

Catch basin means an open basin which serves as a single collection point for stormwater runoff received directly from refinery surfaces and for refinery wastewater from process drains.

Closed vent system means a system that is not open to the atmosphere and that is composed of piping, connections, and, if necessary, flow-inducing devices that transport gas or vapor from an emission source to a control device. If gas or vapor from regulated equipment are routed to a process (e.g., to a petroleum refinery fuel gas system), the process shall not be considered a closed vent system and is not subject to the closed vent system standards.

Completely closed drain system means an individual drain system that is not open to the atmosphere and is equipped and operated with a closed vent system and control device complying with the requirements of § 60.692–5.

Control device means an enclosed combustion device, vapor recovery system or flare.

Fixed roof means a cover that is mounted to a tank or chamber in a stationary manner and which does not move with fluctuations in wastewater levels.

Floating roof means a pontoon-type or double-deck type cover that rests on the liquid surface.

Gas-tight means operated with no detectable emissions.

Individual drain system means all process drains connected to the first common downstream junction box. The term includes all such drains and common junction box, together with their associated sewer lines and other junction boxes, down to the receiving oil-water separator.

Junction box means a manhole or access point to a wastewater sewer system line.

No detectable emissions means less than 500 ppm above background levels, as measured by a detection instrument in accordance with Method 21 in appendix A of 40 CFR part 60.

Non-contact cooling water system means a once-through drain, collection and treatment system designed and operated for collecting cooling water which does not come into contact with hydrocarbons or oily wastewater and which is not recirculated through a cooling tower.

Oil-water separator means wastewater treatment equipment used to separate oil from water consisting of a separation tank, which also includes the forebay and other separator basins, skimmers, weirs, grit chambers, and sludge hoppers. Slop oil facilities, including tanks, are included in this term along with storage vessels and auxiliary equipment located between individual drain systems and the oil-water separator. This term does not include storage vessels or auxiliary equipment which do not come in contact with or store oily wastewater.

Oily wastewater means wastewater generated during the refinery process which contains oil, emulsified oil, or other hydrocarbons. Oily wastewater originates from a variety of refinery processes including cooling water, condensed stripping steam, tank draw-off, and contact process water.

Petroleum means the crude oil removed from the earth and the oils derived from tar sands, shale, and coal.

Petroleum refinery means any facility engaged in producing gasoline, kerosene, distillate fuel oils, residual fuel oils, lubricants, or other products through the distillation of petroleum, or through the redistillation of petroleum, cracking, or reforming unfinished petroleum derivatives.

Sewer line means a lateral, trunk line, branch line, ditch, channel, or other conduit used to convey refinery wastewater to downstream components of a refinery wastewater treatment system. This term does not include buried, below-grade sewer lines.

Slop oil means the floating oil and solids that accumulate on the surface of an oil-water separator.

Storage vessel means any tank, reservoir, or container used for the storage of petroleum liquids, including oily wastewater.

Stormwater sewer system means a drain and collection system designed and operated for the sole purpose of collecting stormwater and which is segregated from the process wastewater collection system.

Wastewater system means any component, piece of equipment, or installation that receives, treats, or processes oily wastewater from petroleum refinery process units.

Water seal controls means a seal pot, p-leg trap, or other type of trap filled with water that has a design capability to create a water barrier between the sewer and the atmosphere.

[53 FR 47623, Nov. 23, 1985, as amended at 60 FR 43259, Aug. 18, 1995]

§ 60.692–1 Standards: General.

(a) Each owner or operator subject to the provisions of this subpart shall comply with the requirements of §§ 60.692–1 to 60.692–5 and with §§ 60.693–1 and 60.693–2, except during periods of startup, shutdown, or malfunction.

(b) Compliance with §§ 60.692–1 to 60.692–5 and with §§ 60.693–1 and 60.693–2 will be determined by review of records and reports, review of performance test results, and inspection using the methods and procedures specified in § 60.696.

(c) Permission to use alternative means of emission limitation to meet the requirements of §§ 60.692–2 through 60.692–4 may be granted as provided in § 60.694.

(d)(1) Stormwater sewer systems are not subject to the requirements of this subpart.

(2) Ancillary equipment, which is physically separate from the wastewater system and does not come in contact with or store oily wastewater, is not subject to the requirements of this subpart.

(3) Non-contact cooling water systems are not subject to the requirements of this subpart.

(4) An owner or operator shall demonstrate compliance with the exclusions in paragraphs (d)(1), (2), and (3) of this section as provided in § 60.697 (h), (i), and (j).

§ 60.692–2 Standards: Individual drain systems.

(a)(1) Each drain shall be equipped with water seal controls.

(2) Each drain in active service shall be checked by visual or physical inspection initially and monthly thereafter for indications of low water levels or other conditions that would reduce the effectiveness of the water seal controls.

(3) Except as provided in paragraph (a)(4) of this section, each drain out of active service shall be checked by visual or physical inspection initially and weekly thereafter for indications of low water levels or other problems that could result in VOC emissions.

(4) As an alternative to the requirements in paragraph (a)(3) of this section, if an owner or operator elects to install a tightly sealed cap or plug over a drain that is out of service, inspections shall be conducted initially and semiannually to ensure caps or plugs are in place and properly installed.

(5) Whenever low water levels or missing or improperly installed caps or plugs are identified, water shall be added or first efforts at repair shall be made as soon as practicable, but not later than 24 hours after detection, except as provided in § 60.692–6.

(b)(1) Junction boxes shall be equipped with a cover and may have an open vent pipe. The vent pipe shall be at least 90 cm (3 ft) in length and shall not exceed 10.2 cm (4 in) in diameter.

(2) Junction box covers shall have a tight seal around the edge and shall be kept in place at all times, except during inspection and maintenance.

(3) Junction boxes shall be visually inspected initially and semiannually thereafter to ensure that the cover is in place and to ensure that the cover has a tight seal around the edge.

(4) If a broken seal or gap is identified, first effort at repair shall be made as soon as practicable, but not later than 15 calendar days after the broken seal or gap is identified, except as provided in § 60.692–6.

(c)(1) Sewer lines shall not be open to the atmosphere and shall be covered or enclosed in a manner so as to have no visual gaps or cracks in joints, seals, or other emission interfaces.

(2) The portion of each unburied sewer line shall be visually inspected initially and semiannually thereafter for indication of cracks, gaps, or other problems that could result in VOC emissions.

(3) Whenever cracks, gaps, or other problems are detected, repairs shall be made as soon as practicable, but not later than 15 calendar days after identification, except as provided in § 60.692–6.

(d) Except as provided in paragraph (e) of this section, each modified or reconstructed individual drain system that has a catch basin in the existing configuration prior to May 4, 1987 shall be exempt from the provisions of this section.

(e) Refinery wastewater routed through new process drains and a new first common downstream junction box, either as part of a new individual drain system or an existing individual drain system, shall not be routed through a downstream catch basin.

§ 60.692–3 Standards: Oil-water separators.

(a) Each oil-water separator tank, slop oil tank, storage vessel, or other auxiliary equipment subject to the requirements of this subpart shall be equipped and operated with a fixed roof, which meets the following specifications, except as provided in paragraph (d) of this section or in § 60.693–2.

(1) The fixed roof shall be installed to completely cover the separator tank, slop oil tank, storage vessel, or other auxiliary equipment with no separation between the roof and the wall.

(2) The vapor space under a fixed roof shall not be purged unless the vapor is directed to a control device.

(3) If the roof has access doors or openings, such doors or openings shall be gasketed, latched, and kept closed at all times during operation of the separator system, except during inspection and maintenance.

(4) Roof seals, access doors, and other openings shall be checked by visual inspection initially and semiannually thereafter to ensure that no cracks or gaps occur between the roof and wall and that access doors and other openings are closed and gasketed properly.

(5) When a broken seal or gasket or other problem is identified, first efforts at repair shall be made as soon as practicable, but not later than 15 calendar days after it is identified, except as provided in § 60.692–6.

(b) Each oil-water separator tank or auxiliary equipment with a design capacity to treat more than 16 liters per second (250 gpm) of refinery wastewater shall, in addition to the requirements in paragraph (a) of this section, be equipped and operated with a closed vent system and control device, which meet the requirements of § 60.692–5, except as provided in paragraph (c) of this section or in § 60.693–2.

(c)(1) Each modified or reconstructed oil-water separator tank with a maximum design capacity to treat less than 38 liters per second (600 gpm) of refinery wastewater which was equipped and operated with a fixed roof covering the entire separator tank or a portion of the separator tank prior to May 4, 1987 shall be exempt from the requirements of paragraph (b) of this section, but shall meet the requirements of paragraph (a) of this section, or may elect to comply with paragraph (c)(2) of this section.

(2) The owner or operator may elect to comply with the requirements of paragraph (a) of this section for the existing fixed roof covering a portion of the separator tank and comply with the requirements for floating roofs in § 60.693–2 for the remainder of the separator tank.

(d) Storage vessels, including slop oil tanks and other auxiliary tanks that are subject to the standards in §§ 60.112, 60.112a, and 60.112b and associated requirements, 40 CFR part 60, subparts K, Ka, or Kb are not subject to the requirements of this section.

(e) Slop oil from an oil-water separator tank and oily wastewater from slop oil handling equipment shall be collected, stored, transported, recycled, reused, or disposed of in an enclosed system. Once slop oil is returned to the process unit or is disposed of, it is no longer within the scope of this subpart. Equipment used in handling slop oil shall be equipped with a fixed roof meeting the requirements of paragraph (a) of this section.

(f) Each oil-water separator tank, slop oil tank, storage vessel, or other auxiliary equipment that is required to comply with paragraph (a) of this section, and not paragraph (b) of this section, may be equipped with a pressure control valve as necessary for proper system operation. The pressure control valve shall be set at the maximum pressure necessary for proper system operation, but such that the value will not vent continuously.

[53 FR 47623, Nov. 23, 1985, as amended at 60 FR 43259, Aug. 18, 1995]

§ 60.692–4 Standards: Aggregate facility.

A new, modified, or reconstructed aggregate facility shall comply with the requirements of §§ 60.692–2 and 60.692–3.

§ 60.692–5 Standards: Closed vent systems and control devices.

(a) Enclosed combustion devices shall be designed and operated to reduce the VOC emissions vented to them with an efficiency of 95 percent or greater or to provide a minimum residence time of 0.75 seconds at a minimum temperature of 816 °C (1,500 °F).

(b) Vapor recovery systems (for example, condensers and adsorbers) shall be designed and operated to recover the VOC emissions vented to them with an efficiency of 95 percent or greater.

(c) Flares used to comply with this subpart shall comply with the requirements of 40 CFR 60.18.

(d) Closed vent systems and control devices used to comply with provisions of this subpart shall be operated at all times when emissions may be vented to them.

(e)(1) Closed vent systems shall be designed and operated with no detectable emissions, as indicated by an instrument reading of less than 500 ppm above background, as determined during the initial and semiannual inspections by the methods specified in § 60.696.

(2) Closed vent systems shall be purged to direct vapor to the control device.

(3) A flow indicator shall be installed on a vent stream to a control device to ensure that the vapors are being routed to the device.

(4) All gauging and sampling devices shall be gas-tight except when gauging or sampling is taking place.

(5) When emissions from a closed system are detected, first efforts at repair to eliminate the emissions shall be made as soon as practicable, but not later than 30 calendar days from the date the emissions are detected, except as provided in § 60.692–6.

§ 60.692–6 Standards: Delay of repair.

(a) Delay of repair of facilities that are subject to the provisions of this subpart will be allowed if the repair is technically impossible without a complete or partial refinery or process unit shutdown.

(b) Repair of such equipment shall occur before the end of the next refinery or process unit shutdown.

§ 60.692–7 Standards: Delay of compliance.

(a) Delay of compliance of modified individual drain systems with ancillary downstream treatment components will be allowed if compliance with the provisions of this subpart cannot be achieved without a refinery or process unit shutdown.

(b) Installation of equipment necessary to comply with the provisions of this subpart shall occur no later than the next scheduled refinery or process unit shutdown.

§ 60.693–1 Alternative standards for individual drain systems.

(a) An owner or operator may elect to construct and operate a completely closed drain system.

(b) Each completely closed drain system shall be equipped and operated with a closed vent system and control device complying with the requirements of § 60.692–5.

(c) An owner or operator must notify the Administrator in the report required in 40 CFR 60.7 that the owner or operator has elected to construct and operate a completely closed drain system.

(d) If an owner or operator elects to comply with the provisions of this section, then the owner or operator does not need to comply with the provisions of § 60.692–2 or § 60.694.

(e)(1) Sewer lines shall not be open to the atmosphere and shall be covered or enclosed in a manner so as to have no visual gaps or cracks in joints, seals, or other emission interfaces.

(2) The portion of each unburied sewer line shall be visually inspected initially and semiannually thereafter for indication of cracks, gaps, or other problems that could result in VOC emissions.

(3) Whenever cracks, gaps, or other problems are detected, repairs shall be made as soon as practicable, but not later than 15 calendar days after identification, except as provided in § 60.692–6.

§ 60.693–2 Alternative standards for oil-water separators.

(a) An owner or operator may elect to construct and operate a floating roof on an oil-water separator tank, slop oil tank, storage vessel, or other auxiliary equipment subject to the requirements of this subpart which meets the following specifications.

(1) Each floating roof shall be equipped with a closure device between the wall of the separator and the roof edge. The closure device is to consist of a primary seal and a secondary seal.

(i) The primary seal shall be a liquid-mounted seal or a mechanical shoe seal.

(A) A liquid-mounted seal means a foam- or liquid-filled seal mounted in contact with the liquid between the wall of the separator and the floating roof. A mechanical shoe seal means a metal sheet held vertically against the wall of the separator by springs or weighted levers and is connected by braces to the floating roof. A flexible coated fabric (envelope) spans the annular space between the metal sheet and the floating roof.

(B) The gap width between the primary seal and the separator wall shall not exceed 3.8 cm (1.5 in.) at any point.

(C) The total gap area between the primary seal and the separator wall shall not exceed 67 cm^2/m (3.2 $in.^2/ft$) of separator wall perimeter.

(ii) The secondary seal shall be above the primary seal and cover the annular space between the floating roof and the wall of the separator.

(A) The gap width between the secondary seal and the separator wall shall not exceed 1.3 cm (0.5 in.) at any point.

(B) The total gap area between the secondary seal and the separator wall shall not exceed 6.7 cm^2/m (0.32 $in.^2/ft$) of separator wall perimeter.

(iii) The maximum gap width and total gap area shall be determined by the methods and procedures specified in § 60.696(d).

(A) Measurement of primary seal gaps shall be performed within 60 calendar days after initial installation of the floating roof and introduction of refinery wastewater and once every 5 years thereafter.

(B) Measurement of secondary seal gaps shall be performed within 60 calendar days of initial introduction of refinery wastewater and once every year thereafter.

(iv) The owner or operator shall make necessary repairs within 30 calendar days of identification of seals not meeting the requirements listed in paragraphs (a)(1) (i) and (ii) of this section.

(2) Except as provided in paragraph (a)(4) of this section, each opening in the roof shall be equipped with a gasketed cover, seal, or lid, which shall be maintained in a closed position at all times, except during inspection and maintenance.

(3) The roof shall be floating on the liquid (i.e., off the roof supports) at all

times except during abnormal conditions (i.e., low flow rate).

(4) The floating roof may be equipped with one or more emergency roof drains for removal of stormwater. Each emergency roof drain shall be fitted with a slotted membrane fabric cover that covers at least 90 percent of the drain opening area or a flexible fabric sleeve seal.

(5)(i) Access doors and other openings shall be visually inspected initially and semiannually thereafter to ensure that there is a tight fit around the edges and to identify other problems that could result in VOC emissions.

(ii) When a broken seal or gasket on an access door or other opening is identified, it shall be repaired as soon as practicable, but not later than 30 calendar days after it is identified, except as provided in § 60.692–6.

(b) An owner or operator must notify the Administrator in the report required by 40 CFR 60.7 that the owner or operator has elected to construct and operate a floating roof under paragraph (a) of this section.

(c) For portions of the oil-water separator tank where it is infeasible to construct and operate a floating roof, such as the skimmer mechanism and weirs, a fixed roof meeting the requirements of § 60.692–3(a) shall be installed.

(d) Except as provided in paragraph (c) of this section, if an owner or operator elects to comply with the provisions of this section, then the owner or operator does not need to comply with the provisions of §§ 60.692–3 or 60.694 applicable to the same facilities.

[53 FR 47623, Nov. 23, 1985, as amended at 60 FR 43259, Aug. 18, 1995]

§ 60.694 Permission to use alternative means of emission limitation.

(a) If, in the Administrator's judgment, an alternative means of emission limitation will achieve a reduction in VOC emissions at least equivalent to the reduction in VOC emissions achieved by the applicable requirement in § 60.692, the Administrator will publish in the FEDERAL REGISTER a notice permitting the use of the alternative means for purposes of compliance with that requirement. The notice may condition the permission on requirements related to the operation and maintenance of the alternative means.

(b) Any notice under paragraph (a) of this section shall be published only after notice and an opportunity for a hearing.

(c) Any person seeking permission under this section shall collect, verify, and submit to the Administrator information showing that the alternative means achieves equivalent emission reductions.

§ 60.695 Monitoring of operations.

(a) Each owner or operator subject to the provisions of this subpart shall install, calibrate, maintain, and operate according to manufacturer's specifications the following equipment, unless alternative monitoring procedures or requirements are approved for that facility by the Administrator.

(1) Where a thermal incinerator is used for VOC emission reduction, a temperature monitoring device equipped with a continuous recorder shall be used to measure the temperature of the gas stream in the combustion zone of the incinerator. The temperature monitoring device shall have an accuracy of 1 percent of the temperature being measured in °C or ±0.5 °C (±1.0 °F), whichever is greater.

(2) Where a catalytic incinerator is used for VOC emission reduction, temperature monitoring devices, each equipped with a continuous recorder shall be used to measure the temperature in the gas stream immediately before and after the catalyst bed of the incinerator. The temperature monitoring devices shall have an accuracy of 1 percent of the temperature being measured in °C or ±0.5 °C (±1.0 °F), whichever is greater.

(3) Where a carbon adsorber is used for VOC emissions reduction, a monitoring device that continuously indicates and records the VOC concentration level or reading of organics in the exhaust gases of the control device outlet gas stream or inlet and outlet gas stream shall be used.

(i) For a carbon adsorption system that regenerates the carbon bed directly onsite, a monitoring device that continuously indicates and records the volatile organic compound concentration level or reading of organics in the

exhaust gases of the control device outlet gas stream or inlet and outlet gas stream shall be used.

(ii) For a carbon adsorption system that does not regenerate the carbon bed directly onsite in the control device (e.g., a carbon canister), the concentration level of the organic compounds in the exhaust vent stream from the carbon adsorption system shall be monitored on a regular schedule, and the existing carbon shall be replaced with fresh carbon immediately when carbon breakthrough is indicated. The device shall be monitored on a daily basis or at intervals no greater than 20 percent of the design carbon replacement interval, whichever is greater. As an alternative to conducting this monitoring, an owner or operator may replace the carbon in the carbon adsorption system with fresh carbon at a regular predetermined time interval that is less than the carbon replacement interval that is determined by the maximum design flow rate and organic concentration in the gas stream vented to the carbon adsorption system.

(4) Where a flare is used for VOC emission reduction, the owner or operator shall comply with the monitoring requirements of 40 CFR 60.18(f)(2).

(b) Where a VOC recovery device other than a carbon adsorber is used to meet the requirements specified in §60.692–5(a), the owner or operator shall provide to the Administrator information describing the operation of the control device and the process parameter(s) that would indicate proper operation and maintenance of the device. The Administrator may request further information and will specify appropriate monitoring procedures or requirements.

(c) An alternative operational or process parameter may be monitored if it can be demonstrated that another parameter will ensure that the control device is operated in conformance with these standards and the control device's design specifications.

[53 FR 47623, Nov. 23, 1985, as amended at 60 FR 43259, Aug. 18, 1995]

§60.696 Performance test methods and procedures and compliance provisions.

(a) Before using any equipment installed in compliance with the requirements of §60.692–2, §60.692–3, §60.692–4, §60.692–5, or §60.693, the owner or operator shall inspect such equipment for indications of potential emissions, defects, or other problems that may cause the requirements of this subpart not to be met. Points of inspection shall include, but are not limited to, seals, flanges, joints, gaskets, hatches, caps, and plugs.

(b) The owner or operator of each source that is equipped with a closed vent system and control device as required in §60.692–5 (other than a flare) is exempt from §60.8 of the General Provisions and shall use Method 21 to measure the emission concentrations, using 500 ppm as the no detectable emission limit. The instrument shall be calibrated each day before using. The calibration gases shall be:

(1) Zero air (less than 10 ppm of hydrocarbon in air), and

(2) A mixture of either methane or n-hexane and air at a concentration of approximately, but less than, 10,000 ppm methane or n-hexane.

(c) The owner or operator shall conduct a performance test initially, and at other times as requested by the Administrator, using the test methods and procedures in §60.18(f) to determine compliance of flares.

(d) After installing the control equipment required to meet §60.693–2(a) or whenever sources that have ceased to treat refinery wastewater for a period of 1 year or more are placed back into service, the owner or operator shall determine compliance with the standards in §60.693–2(a) as follows:

(1) The maximum gap widths and maximum gap areas between the primary seal and the separator wall and between the secondary seal and the separator wall shall be determined individually within 60 calendar days of the initial installation of the floating roof and introduction of refinery wastewater or 60 calendar days after the equipment is placed back into service using the following procedure when

the separator is filled to the design operating level and when the roof is floating off the roof supports.

(i) Measure seal gaps around the entire perimeter of the separator in each place where a 0.32 cm (0.125 in.) diameter uniform probe passes freely (without forcing or binding against seal) between the seal and the wall of the separator and measure the gap width and perimetrical distance of each such location.

(ii) The total surface area of each gap described in (d)(1)(i) of this section shall be determined by using probes of various widths to measure accurately the actual distance from the wall to the seal and multiplying each such width by its respective perimetrical distance.

(iii) Add the gap surface area of each gap location for the primary seal and the secondary seal individually, divide the sum for each seal by the nominal perimeter of the separator basin and compare each to the maximum gap area as specified in §60.693–2.

(2) The gap widths and total gap area shall be determined using the procedure in paragraph (d)(1) of this section according to the following frequency:

(i) For primary seals, once every 5 years.

(ii) For secondary seals, once every year.

§60.697 Recordkeeping requirements.

(a) Each owner or operator of a facility subject to the provisions of this subpart shall comply with the recordkeeping requirements of this section. All records shall be retained for a period of 2 years after being recorded unless otherwise noted.

(b)(1) For individual drain systems subject to §60.692–2, the location, date, and corrective action shall be recorded for each drain when the water seal is dry or otherwise breached, when a drain cap or plug is missing or improperly installed, or other problem is identified that could result in VOC emissions, as determined during the initial and periodic visual or physical inspection.

(2) For junction boxes subject to §60.692–2, the location, date, and corrective action shall be recorded for inspections required by §60.692–2(b) when a broken seal, gap, or other problem is identified that could result in VOC emissions.

(3) For sewer lines subject to §§60.692–2 and 60.693–1(e), the location, date, and corrective action shall be recorded for inspections required by §§60.692–2(c) and 60.693–1(e) when a problem is identified that could result in VOC emissions.

(c) For oil-water separators subject to §60.692–3, the location, date, and corrective action shall be recorded for inspections required by by §60.692–3(a) when a problem is identified that could result in VOC emissions.

(d) For closed vent systems subject to §60.692–5 and completely closed drain systems subject to §60.693–1, the location, date, and corrective action shall be recorded for inspections required by §60.692–5(e) during which detectable emissions are measured or a problem is identified that could result in VOC emissions.

(e)(1) If an emission point cannot be repaired or corrected without a process unit shutdown, the expected date of a successful repair shall be recorded.

(2) The reason for the delay as specified in §60.692–6 shall be recorded if an emission point or equipment problem is not repaired or corrected in the specified amount of time.

(3) The signature of the owner or operator (or designee) whose decision it was that repair could not be effected without refinery or process shutdown shall be recorded.

(4) The date of successful repair or corrective action shall be recorded.

(f)(1) A copy of the design specifications for all equipment used to comply with the provisions of this subpart shall be kept for the life of the source in a readily accessible location.

(2) The following information pertaining to the design specifications shall be kept.

(i) Detailed schematics, and piping and instrumentation diagrams.

(ii) The dates and descriptions of any changes in the design specifications.

(3) The following information pertaining to the operation and maintenance of closed drain systems and closed vent systems shall be kept in a readily accessible location.

(i) Documentation demonstrating that the control device will achieve the required control efficiency during maximum loading conditions shall be kept for the life of the facility. This documentation is to include a general description of the gas streams that enter the control device, including flow and volatile organic compound content under varying liquid level conditions (dynamic and static) and manufacturer's design specifications for the control device. If an enclosed combustion device with a minimum residence time of 0.75 seconds and a minimum temperature of 816 °C (1,500 °F) is used to meet the 95-percent requirement, documentation that those conditions exist is sufficient to meet the requirements of this paragraph.

(ii) For a carbon adsorption system that does not regenerate the carbon bed directly onsite in the control device such as a carbon canister, the design analysis shall consider the vent stream composition, constituent concentrations, flow rate, relative humidity, and temperature. The design analysis shall also establish the design exhaust vent stream organic compound concentration level, capacity of carbon bed, type and working capacity of activated carbon used for carbon bed, and design carbon replacement interval based on the total carbon working capacity of the control device and source operating schedule.

(iii) Periods when the closed vent systems and control devices required in § 60.692 are not operated as designed, including periods when a flare pilot does not have a flame shall be recorded and kept for 2 years after the information is recorded.

(iv) Dates of startup and shutdown of the closed vent system and control devices required in § 60.692 shall be recorded and kept for 2 years after the information is recorded.

(v) The dates of each measurement of detectable emissions required in §§ 60.692, 60.693, or 60.692–5 shall be recorded and kept for 2 years after the information is recorded.

(vi) The background level measured during each detectable emissions measurement shall be recorded and kept for 2 years after the information is recorded.

(vii) The maximum instrument reading measured during each detectable emission measurement shall be recorded and kept for 2 years after the information is recorded.

(viii) Each owner or operator of an affected facility that uses a thermal incinerator shall maintain continuous records of the temperature of the gas stream in the combustion zone of the incinerator and records of all 3-hour periods of operation during which the average temperature of the gas stream in the combustion zone is more than 28 °C (50 °F) below the design combustion zone temperature, and shall keep such records for 2 years after the information is recorded.

(ix) Each owner or operator of an affected facility that uses a catalytic incinerator shall maintain continuous records of the temperature of the gas stream both upstream and downstream of the catalyst bed of the incinerator, records of all 3-hour periods of operation during which the average temperature measured before the catalyst bed is more than 28 °C (50 °F) below the design gas stream temperature, and records of all 3-hour periods during which the average temperature difference across the catalyst bed is less than 80 percent of the design temperature difference, and shall keep such records for 2 years after the information is recorded.

(x) Each owner or operator of an affected facility that uses a carbon adsorber shall maintain continuous records of the VOC concentration level or reading of organics of the control device outlet gas stream or inlet and outlet gas stream and records of all 3-hour periods of operation during which the average VOC concentration level or reading of organics in the exhaust gases, or inlet and outlet gas stream, is more than 20 percent greater than the design exhaust gas concentration level, and shall keep such records for 2 years after the information is recorded.

(A) Each owner or operator of an affected facility that uses a carbon adsorber which is regenerated directly onsite shall maintain continuous records of the volatile organic compound concentration level or reading of organics of the control device outlet gas stream or inlet and outlet gas

stream and records of all 3-hour periods of operation during which the average volatile organic compound concentration level or reading of organics in the exhaust gases, or inlet and outlet gas stream, is more than 20 percent greater than the design exhaust gas concentration level, and shall keep such records for 2 years after the information is recorded.

(B) If a carbon adsorber that is not regenerated directly onsite in the control device is used, then the owner or operator shall maintain records of dates and times when the control device is monitored, when breakthrough is measured, and shall record the date and time that the existing carbon in the control device is replaced with fresh carbon.

(g) If an owner or operator elects to install a tightly sealed cap or plug over a drain that is out of active service, the owner or operator shall keep for the life of a facility in a readily accessible location, plans or specifications which indicate the location of such drains.

(h) For stormwater sewer systems subject to the exclusion in §60.692–1(d)(1), an owner or operator shall keep for the life of the facility in a readily accessible location, plans or specifications which demonstrate that no wastewater from any process units or equipment is directly discharged to the stormwater sewer system.

(i) For ancillary equipment subject to the exclusion in §60.692–1(d)(2), an owner or operator shall keep for the life of a facility in a readily accessible location, plans or specifications which demonsrate that the ancillary equipment does not come in contact with or store oily wastewater.

(j) For non-contact cooling water systems subject to the exclusion in §60.692–1(d)(3), an owner or operator shall keep for the life of the facility in a readily accessible location, plans or specifications which demonstrate that the cooling water does not contact hydrocarbons or oily wastewater and is not recirculated through a cooling tower.

[53 FR 47623, Nov. 23, 1985, as amended at 60 FR 43259, Aug. 18, 1995]

§60.698 Reporting requirements.

(a) An owner or operator electing to comply with the provisions of §60.693 shall notify the Administrator of the alternative standard selected in the report required in §60.7.

(b)(1) Each owner or operator of a facility subject to this subpart shall submit to the Administrator within 60 days after initial startup a certification that the equipment necessary to comply with these standards has been installed and that the required initial inspections or tests of process drains, sewer lines, junction boxes, oil-water separators, and closed vent systems and control devices have been carried out in accordance with these standards. Thereafter, the owner or operator shall submit to the Administrator semiannually a certification that all of the required inspections have been carried out in accordance with these standards.

(2) Each owner or operator of an affected facility that uses a flare shall submit to the Administrator within 60 days after initial startup, as required under §60.8(a), a report of the results of the performance test required in §60.696(c).

(c) A report that summarizes all inspections when a water seal was dry or otherwise breached, when a drain cap or plug was missing or improperly installed, or when cracks, gaps, or other problems were identified that could result in VOC emissions, including information about the repairs or corrective action taken, shall be submitted initially and semiannually thereafter to the Administrator.

(d) As applicable, a report shall be submitted semiannually to the Administrator that indicates:

(1) Each 3-hour period of operation during which the average temperature of the gas stream in the combustion zone of a thermal incinerator, as measured by the temperature monitoring device, is more than 28 °C (50 °F) below the design combustion zone temperature,

(2) Each 3-hour period of operation during which the average temperature of the gas stream immediately before the catalyst bed of a catalytic incinerator, as measured by the temperature monitoring device, is more than 28 °C

(50 °F) below the design gas stream temperature, and any 3-hour period during which the average temperature difference across the catalyst bed (i.e., the difference between the temperatures of the gas stream immediately before and after the catalyst bed), as measured by the temperature monitoring device, is less than 80 percent of the design temperature difference, or,

(3) Each 3-hour period of operation during which the average VOC concentration level or reading of organics in the exhaust gases from a carbon adsorber is more than 20 percent greater than the design exhaust gas concentration level or reading.

(i) Each 3-hour period of operation during which the average volatile organic compound concentration level or reading of organics in the exhaust gases from a carbon adsorber which is regenerated directly onsite is more than 20 percent greater than the design exhaust gas concentration level or reading.

(ii) Each occurrence when the carbon in a carbon adsorber system that is not regenerated directly onsite in the control device is not replaced at the predetermined interval specified in §60.695(a)(3)(ii).

(e) If compliance with the provisions of this subpart is delayed pursuant to §60.692–7, the notification required under 40 CFR 60.7(a)(4) shall include the estimated date of the next scheduled refinery or process unit shutdown after the date of notification and the reason why compliance with the standards is technically impossible without a refinery or process unit shutdown.

[53 FR 47623, Nov. 23, 1985, as amended at 60 FR 43260, Aug. 18, 1995]

§60.699 Delegation of authority.

(a) In delegating implementation and enforcement authority to a State under section 111(c) of the Act, the authorities contained in paragraph (b) of this section shall be retained by the Administrator and not transferred to a State.

(b) Authorities which will not be delegated to States:

§60.694 Permission to use alternative means of emission limitations.

[53 FR 47623, Nov. 23, 1985]

Subpart RRR—Standards of Performance for Volatile Organic Compound Emissions From Synthetic Organic Chemical Manufacturing Industry (SOCMI) Reactor Processes

SOURCE: 58 FR 45962, Aug. 31, 1993, unless otherwise noted.

EFFECTIVE DATE NOTE: At 58 FR 45962, Aug. 31, 1993, subpart RRR was added. This subpart contains information collection and recordkeeping requirements which will not become effective until approval has been given by the Office of Management and Budget. A document will be published in the FEDERAL REGISTER once approval has been obtained.

§60.700 Applicability and designation of affected facility.

(a) The provisions of this subpart apply to each affected facility designated in paragraph (b) of this section that is part of a process unit that produces any of the chemicals listed in §60.707 as a product, co-product, by-product, or intermediate, except as provided in paragraph (c) of this section.

(b) The affected facility is any of the following for which construction, modification, or reconstruction commenced after June 29, 1990:

(1) Each reactor process not discharging its vent stream into a recovery system.

(2) Each combination of a reactor process and the recovery system into which its vent stream is discharged.

(3) Each combination of two or more reactor processes and the common recovery system into which their vent streams are discharged.

(c) Exemptions from the provisions of paragraph (a) of this section are as follows:

(1) Any reactor process that is designed and operated as a batch operation is not an affected facility.

(2) Each affected facility that has a total resource effectiveness (TRE) index value greater than 8.0 is exempt from all provisions of this subpart except for §§60.702(c); 60.704 (d), (e), and (f); and 60.705 (g), (l)(1), (l)(6), and (t).

(3) Each affected facility in a process unit with a total design capacity for all chemicals produced within that unit of less than 1 gigagram per year (1,100

tons per year) is exempt from all provisions of this subpart except for the recordkeeping and reporting requirements in § 60.705 (i), (l)(5), and (n).

(4) Each affected facility operated with a vent stream flow rate less than 0.011 scm/min is exempt from all provisions of this subpart except for the test method and procedure and the recordkeeping and reporting requirements in § 60.704(g) and § 70.705 (h), (l)(4), and (o).

(5) If the vent stream from an affected facility is routed to a distillation unit subject to subpart NNN and has no other releases to the air except for a pressure relief valve, the facility is exempt from all provisions of this subpart except for § 60.705(r).

(6) Any reactor process operating as part of a process unit which produces beverage alcohols, or which uses, contains, and produces no VOC is not an affected facility.

(7) Any reactor process that is subject to the provisions of subpart DDD is not an affected facility.

(8) Each affected facility operated with a concentration of total organic compounds (TOC) (less methane and ethane) in the vent stream less than 300 ppmv as measured by Method 18 or a concentration of TOC in the vent stream less than 150 ppmv as measured by Method 25A is exempt from all provisions of this subpart except for the test method and procedure and the reporting and recordkeeping requirements in § 60.704(h) and paragraphs (j), (l)(8), and (p) of § 60.705.

(NOTE: The intent of these standards is to minimize emissions of VOC through the application of best demonstrated technology (BDT). The numerical emission limits in these standards are expressed in terms of TOC, measured as TOC less methane and ethane. This emission limit reflects the performance of BDT.)

[58 FR 45962, Aug. 31, 1993, as amended at 60 FR 58238, Nov. 27, 1995]

§ 60.701 Definitions.

As used in this subpart, all terms not defined here shall have the meaning given them in the Act and in subpart A of part 60, and the following terms shall have the specific meanings given them.

Batch operation means any noncontinuous reactor process that is not characterized by steady-state conditions and in which reactants are not added and products are not removed simultaneously.

Boiler means any enclosed combustion device that extracts useful energy in the form of steam and is not an incinerator.

By compound means by individual stream components, not carbon equivalents.

Car-seal means a seal that is placed on a device that is used to change the position of a valve (e.g., from opened to closed) in such a way that the position of the valve cannot be changed without breaking the seal.

Combustion device means an individual unit of equipment, such as an incinerator, flare, boiler, or process heater, used for combustion of a vent stream discharged from the process vent.

Continuous recorder means a data recording device recording an instantaneous data value at least once every 15 minutes.

Flame zone means the portion of the combustion chamber in a boiler occupied by the flame envelope.

Flow indicator means a device which indicates whether gas flow is present in a line.

Halogenated vent stream means any vent stream determined to have a total concentration (by volume) of compounds containing halogens of 20 ppmv (by compound) or greater.

Incinerator means an enclosed combustion device that is used for destroying organic compounds. If there is energy recovery, the energy recovery section and the combustion chambers are not of integral design. That is, the energy recovery section and the combustion section are not physically formed into one manufactured or assembled unit but are joined by ducts or connections carrying flue gas.

Primary fuel means the fuel fired through a burner or a number of similar burners. The primary fuel provides the principal heat input to the device, and the amount of fuel is sufficient to sustain operation without the addition of other fuels.

Process heater means a device that transfers heat liberated by burning fuel directly to process streams or to heat transfer liquids other than water.

Process unit means equipment assembled and connected by pipes or ducts to produce, as intermediates or final products, one or more of the chemicals in § 60.707. A process unit can operate independently if supplied with sufficient feed or raw materials and sufficient product storage facilities.

Product means any compound or chemical listed in § 60.707 which is produced for sale as a final product as that chemical, or for use in the production of other chemicals or compounds. Byproducts, co-products, and intermediates are considered to be products.

Reactor processes are unit operations in which one or more chemicals, or reactants other than air, are combined or decomposed in such a way that their molecular structures are altered and one or more new organic compounds are formed.

Recovery device means an individual unit of equipment, such as an absorber, carbon adsorber, or condenser, capable of and used for the purpose of recovering chemicals for use, reuse, or sale.

Recovery system means an individual recovery device or series of such devices applied to the same vent stream.

Relief valve means a valve used only to release an unplanned, nonroutine discharge. A relief valve discharge results from an operator error, a malfunction such as a power failure or equipment failure, or other unexpected cause that requires immediate venting of gas from process equipment in order to avoid safety hazards or equipment damage.

Secondary fuel means a fuel fired through a burner other than a primary fuel burner. The secondary fuel may provide supplementary heat in addition to the heat provided by the primary fuel.

Total organic compounds or TOC means those compounds measured according to the procedures in § 60.704(b)(4). For the purposes of measuring molar composition as required in § 60.704(d)(2)(i) and § 60.704(d)(2)(ii), hourly emission rate as required in § 60.704(d)(5) and § 60.704(e), and TOC concentration as required in § 60.705(b)(4) and § 60.705(f)(4), those compounds which the Administrator has determined do not contribute appreciably to the formation of ozone are to be excluded.

Total resource effectiveness or TRE index value means a measure of the supplemental total resource requirement per unit reduction of TOC associated with a vent stream from an affected reactor process facility, based on vent stream flow rate, emission rate of TOC, net heating value, and corrosion properties (whether or not the vent stream contains halogenated compounds), as quantified by the equation given under § 60.704(e).

Vent stream means any gas stream discharged directly from a reactor process to the atmosphere or indirectly to the atmosphere after diversion through other process equipment. The vent stream excludes relief valve discharges and equipment leaks.

§ 60.702 Standards.

Each owner or operator of any affected facility shall comply with paragraph (a), (b), or (c) of this section for each vent stream on and after the date on which the initial performance test required by § 60.8 and § 60.704 is completed, but not later than 60 days after achieving the maximum production rate at which the affected facility will be operated, or 180 days after the initial start-up, whichever date comes first. Each owner or operator shall either:

(a) Reduce emissions of TOC (less methane and ethane) by 98 weight-percent, or to a TOC (less methane and ethane) concentration of 20 ppmv, on a dry basis corrected to 3 percent oxygen, whichever is less stringent. If a boiler or process heater is used to comply with this paragraph, then the vent stream shall be introduced into the flame zone of the boiler or process heater; or

(b) Combust the emissions in a flare that meets the requirements of § 60.18; or

(c) Maintain a TRE index value greater than 1.0 without use of a VOC emission control device.

§ 60.703 Monitoring of emissions and operations.

(a) The owner or operator of an affected facility that uses an incinerator

to seek to comply with the TOC emission limit specified under §60.702(a) shall install, calibrate, maintain, and operate according to manufacturer's specifications the following equipment:

(1) A temperature monitoring device equipped with a continuous recorder and having an accuracy of ±1 percent of the temperature being monitored expressed in degrees Celsius or ±0.5 °C, whichever is greater.

(i) Where an incinerator other than a catalytic incinerator is used, a temperature monitoring device shall be installed in the firebox or in the ductwork immediately downstream of the firebox in a position before any substantial heat exchange is encountered.

(ii) Where a catalytic incinerator is used, temperature monitoring devices shall be installed in the gas stream immediately before and after the catalyst bed.

(2) A flow indicator that provides a record of vent stream flow diverted from being routed to the incinerator at least once every 15 minutes for each affected facility, except as provided in paragraph (a)(2)(ii) of this section.

(i) The flow indicator shall be installed at the entrance to any bypass line that could divert the vent stream from being routed to the incinerator, resulting in its emission to the atmosphere.

(ii) Where the bypass line valve is secured in the closed position with a car-seal or a lock-and-key type configuration, a flow indicator is not required. A visual inspection of the seal or closure mechanism shall be performed at least once every month to ensure that the valve is maintained in the closed position and the vent stream is not diverted through the bypass line.

(b) The owner or operator of an affected facility that uses a flare to seek to comply with §60.702(b) shall install, calibrate, maintain, and operate according to manufacturer's specifications the following equipment:

(1) A heat sensing device, such as an ultraviolet beam sensor or thermocouple, at the pilot light to indicate the continuous presence of a flame.

(2) A flow indicator that provides a record of vent stream flow diverted from being routed to the flare at least once every 15 minutes for each affected facility, except as provided in paragraph (b)(2)(ii) of this section.

(i) The flow indicator shall be installed at the entrance to any bypass line that could divert the vent stream from being routed to the flare, resulting in its emission to the atmosphere.

(ii) Where the bypass line valve is secured in the closed position with a car-seal or a lock-and-key type configuration, a flow indicator is not required. A visual inspection of the seal or closure mechanism shall be performed at least once every month to ensure that the valve is maintained in the closed position and the vent stream is not diverted through the bypass line.

(c) The owner or operator of an affected facility that uses a boiler or process heater to seek to comply with §60.702(a) shall install, calibrate, maintain and operate according to the manufacturer's specifications the following equipment:

(1) A flow indicator that provides a record of vent stream flow diverted from being routed to the boiler or process heater at least once every 15 minutes for each affected facility, except as provided in paragraph (c)(1)(ii) of this section.

(i) The flow indicator shall be installed at the entrance to any bypass line that could divert the vent stream from being routed to the boiler or process heater, resulting in its emission to the atmosphere.

(ii) Where the bypass line valve is secured in the closed position with a car-seal or a lock-and-key type configuration, a flow indicator is not required. A visual inspection of the seal or closure mechanism shall be performed at least once every month to ensure that the valve is maintained in the closed position and the vent stream is not diverted through the bypass line.

(2) A temperature monitoring device in the firebox equipped with a continuous recorder and having an accuracy of ±1 percent of the temperature being monitored expressed in degrees Celsius or ±0.5 °C, whichever is greater, for boilers or process heaters of less than 44 MW (150 million Btu/hr) design heat input capacity. Any vent stream introduced with primary fuel into a boiler or process heater is exempt from this requirement.

(d) The owner or operator of an affected facility that seeks to demonstrate compliance with the TRE index value limit specified under § 60.702(c) shall install, calibrate, maintain, and operate according to manufacturer's specifications the following equipment, unless alternative monitoring procedures or requirements are approved for that facility by the Administrator:

(1) Where an absorber is the final recovery device in the recovery system:

(i) A scrubbing liquid temperature monitoring device having an accuracy of ±1 percent of the temperature being monitored expressed in degrees Celsius or ±0.5 °C, whichever is greater, and a specific gravity monitoring device having an accuracy of ±0.02 specific gravity units, each equipped with a continuous recorder; or

(ii) An organic monitoring device used to indicate the concentration level of organic compounds exiting the recovery device based on a detection principle such as infra-red, photoionization, or thermal conductivity, each equipped with a continuous recorder.

(2) Where a condenser is the final recovery device in the recovery system:

(i) A condenser exit (product side) temperature monitoring device equipped with a continuous recorder and having an accuracy of ±1 percent of the temperature being monitored expressed in degrees Celsius or ±0.5 °C, whichever is greater; or

(ii) An organic monitoring device used to indicate the concentration level of organic compounds exiting the recovery device based on a detection principle such as infra-red, photoionization, or thermal conductivity, each equipped with a continuous recorder.

(3) Where a carbon adsorber is the final recovery device unit in the recovery system:

(i) An integrating steam flow monitoring device having an accuracy of ±10 percent, and a carbon bed temperature monitoring device having an accuracy of ±1 percent of the temperature being monitored expressed in degrees Celsius or ±0.5 °C, whichever is greater, both equipped with a continuous recorder; or

(ii) An organic monitoring device used to indicate the concentration level of organic compounds exiting the recovery device based on a detection principle such as infra-red, photoionization, or thermal conductivity, each equipped with a continuous recorder.

(e) An owner or operator of an affected facility seeking to demonstrate compliance with the standards specified under § 60.702 with a control device other than an incinerator, boiler, process heater, or flare; or a recovery device other than an absorber, condenser, or carbon adsorber, shall provide to the Administrator information describing the operation of the control device or recovery device and the process parameter(s) which would indicate proper operation and maintenance of the device. The Administrator may request further information and will specify appropriate monitoring procedures or requirements.

§ 60.704 Test methods and procedures.

(a) For the purpose of demonstrating compliance with § 60.702, all affected facilities shall be run at full operating conditions and flow rates during any performance test.

(b) The following methods in Appendix A to this part, except as provided under § 60.8(b), shall be used as reference methods to determine compliance with the emission limit or percent reduction efficiency specified under § 60.702(a).

(1) Method 1 or 1A, as appropriate, for selection of the sampling sites. The control device inlet sampling site for determination of vent stream molar composition or TOC (less methane and ethane) reduction efficiency shall be prior to the inlet of the control device and after the recovery system.

(2) Method 2, 2A, 2C, or 2D, as appropriate, for determination of the gas volumetric flow rates.

(3) The emission rate correction factor, integrated sampling and analysis procedure of Method 3B shall be used to determine the oxygen concentration ($\%O_{2d}$) for the purposes of determining compliance with the 20 ppmv limit. The sampling site shall be the same as that of the TOC samples, and the samples shall be taken during the same

time that the TOC samples are taken. The TOC concentration corrected to 3 percent O_2 (Cc) shall be computed using the following equation:

$$C_C = C_{TOC} \frac{17.9}{20.9 - \%O_{2d}}$$

where:

C_c=Concentration of TOC corrected to 3 percent O_2, dry basis, ppm by volume.

C_{TOC}=Concentration of TOC (minus methane and ethane), dry basis, ppm by volume.

$\%O_{2d}$=Concentration of O_2, dry basis, percent by volume.

(4) Method 18 to determine the concentration of TOC in the control device outlet and the concentration of TOC in the inlet when the reduction efficiency of the control device is to be determined.

(i) The minimum sampling time for each run shall be 1 hour in which either an integrated sample or four grab samples shall be taken. If grab sampling is used, then the samples shall be taken at approximately 15-minute intervals.

(ii) The emission reduction (R) of TOC (minus methane and ethane) shall be determined using the following equation:

$$R = \frac{E_i - E_o}{E_i} \times 100$$

where:

R=Emission reduction, percent by weight.

E_i=Mass rate of TOC entering the control device, kg TOC/hr.

E_o=Mass rate of TOC discharged to the atmosphere, kg TOC/hr.

(iii) The mass rates of TOC (E_i, E_o) shall be computed using the following equations:

$$E_i = K_2 \sum_{j=1}^{n} C_{ij} M_{ij} Q_i$$

$$E_i = K_2 \sum_{j=1}^{n} C_{oj} M_{ij} Q_o$$

where:

C_{ij}, C_{oj}=Concentration of sample component ''j'' of the gas stream at the inlet and outlet of the control device, respectively, dry basis, ppm by volume.

M_{ij}, M_{oj}=Molecular weight of sample component ''j'' of the gas stream at the inlet and outlet of the control device, respectively, g/g-mole (lb/lb-mole).

Q_i, Q_o=Flow rate of gas stream at the inlet and outlet of the control device, respectively, dscm/min (dscf/hr).

K_2=Constant, 2.494×10^{-6} (l/ppm) (g-mole/scm) (kg/g) (min/hr), where standard temperature for (g-mole/scm) is 20 °C.

(iv) The TOC concentration (C_{TOC}) is the sum of the individual components and shall be computed for each run using the following equation:

$$C_{TOC} = \sum_{j=1}^{n} C_j$$

where:

C_{TOC}=Concentration of TOC (minus methane and ethane), dry basis, ppm by volume.

C_j=Concentration of sample components ''j'', dry basis, ppm by volume.

n=Number of components in the sample.

(5) The requirement for an initial performance test is waived, in accordance with §60.8(b), for the following:

(i) When a boiler or process heater with a design heat input capacity of 44 MW (150 million Btu/hour) or greater is used to seek compliance with §60.702(a).

(ii) When a vent stream is introduced into a boiler or process heater with the primary fuel.

(iii) The Administrator reserves the option to require testing at such other times as may be required, as provided for in section 114 of the Act.

(6) For purposes of complying with the 98 weight-percent reduction in §60.702(a), if the vent stream entering a boiler or process heater with a design capacity less than 44 MW (150 million Btu/hour) is introduced with the combustion air or as secondary fuel, the weight-percent reduction of TOC (minus methane and ethane) across the combustion device shall be determined by comparing the TOC (minus methane and ethane) in all combusted vent streams, primary fuels, and secondary fuels with the TOC (minus methane and ethane) exiting the combustion device.

(c) When a flare is used to seek to comply with §60.702(b), the flare shall comply with the requirements of §60.18.

(d) The following test methods in Appendix A to this part, except as provided under §60.8(b), shall be used for determining the net heating value of the gas combusted to determine compliance under §60.702(b) and for determining the process vent stream TRE index value to determine compliance under §60.700(c)(2) and §60.702(c).

(1)(i) Method 1 or 1A, as appropriate, for selection of the sampling site. The sampling site for the vent stream flow rate and molar composition determination prescribed in §60.704 (d)(2) and (d)(3) shall be, except for the situations outlined in paragraph (d)(1)(ii) of this section, prior to the inlet of any control device, prior to any postreactor dilution of the stream with air, and prior to any postreactor introduction of halogenated compounds into the process vent stream. No traverse site selection method is needed for vents smaller than 4 inches in diameter.

(ii) If any gas stream other than the reactor vent stream is normally conducted through the final recovery device:

(A) The sampling site for vent stream flow rate and molar composition shall be prior to the final recovery device and prior to the point at which any nonreactor stream or stream from a nonaffected reactor process is introduced.

(B) The efficiency of the final recovery device is determined by measuring the TOC concentration using Method 18 at the inlet to the final recovery device after the introduction of any vent stream and at the outlet of the final recovery device.

(C) This efficiency of the final recovery device shall be applied to the TOC concentration measured prior to the final recovery device and prior to the introduction of any nonreactor stream or stream from a nonaffected reactor process to determine the concentration of TOC in the reactor process vent stream from the final recovery device. This concentration of TOC is then used to perform the calculations outlined in §60.704(d) (4) and (5).

(2) The molar composition of the process vent stream shall be determined as follows:

(i) Method 18 to measure the concentration of TOC including those containing halogens.

(ii) ASTM D1946–77 (incorporation by reference as specified in §60.17 of this part) to measure the concentration of carbon monoxide and hydrogen.

(iii) Method 4 to measure the content of water vapor.

(3) The volumetric flow rate shall be determined using Method 2, 2A, 2C, or 2D, as appropriate.

(4) The net heating value of the vent stream shall be calculated using the following equation:

$$H_T = K_1 \sum_{j=1}^{n} C_j H_j \quad 1 - B_{ws}$$

where:

H_T=Net heating value of the sample, MJ/scm, where the net enthalpy per mole of vent stream is based on combustion at 25 °C and 760 mm Hg, but the standard temperature for determining the volume corresponding to one mole is 20 °C, as in the definition of Q_s (vent stream flow rate).

K_1=Constant, 1.740×10^{-7} (l/ppm) (g-mole/scm) (MJ/kcal), where standard temperature for (g-mole/scm) is 20 °C.

C_j=Concentration on a dry basis of compound j in ppm, as measured for organics by Method 18 and measured for hydrogen and carbon monoxide by ASTM D1946–77 (incorporation by reference as specified in §60.17 of this part) as indicated in §60.704(d)(2).

H_j=Net heat of combustion of compound j, kcal/g-mole, based on combustion at 25 °C and 760 mm Hg. The heats of combustion of vent stream components would be required to be determined using ASTM D2382–76 (incorporation by reference as specified in §60.17 of this part) if published values are not available or cannot be calculated.

B_{ws}=Water vapor content of the vent stream, proportion by volume.

(5) The emission rate of TOC in the vent stream shall be calculated using the following equation:

$$E_{TOC} = K_2 \sum_{j=1}^{n} C_j M_j \, Q_s$$

where:

E_{TOC}=Emission rate of TOC in the sample, kg/hr.

K_2=Constant, 2.494×10^{-6} (l/ppm) (g-mole/scm) (kg/g) (min/hr), where standard temperature for (g-mole/scm) is 20 °C.

C_j=Concentration on a dry basis of compound j in ppm as measured by Method 18 as indicated in §60.704(d)(2).

M_j=Molecular weight of sample j, g/g-mole.

Q_s=Vent stream flow rate (dscm/min) at a temperature of 20 °C.

(6) The total vent stream concentration (by volume) of compounds containing halogens (ppmv, by compound) shall be summed from the individual concentrations of compounds containing halogens which were measured by Method 18.

(e) For purposes of complying with §60.700(c)(2) and §60.702(c), the owner or operator of a facility affected by this subpart shall calculate the TRE index value of the vent stream using the equation for incineration in paragraph (e)(1) of this section for halogenated vent streams. The owner or operator of an affected facility with a nonhalogenated vent stream shall determine the TRE index value by calculating values using both the incinerator equation in (e)(1) of this section and the flare equation in (e)(2) of this section and selecting the lower of the two values.

(1) The equation for calculating the TRE index value of a vent stream controlled by an incinerator is as follows:

$$TRE = \frac{1}{E_{TOC}}\left[a + b(Q_s)^{0.88} + c(Q_s) + d(Q_s)(H_T) + e(Q_s)^{0.88}(H_T)^{0.88} + f(Y_s)^{0.5}\right]$$

(i) Where for a vent stream flow rate (scm/min) at a standard temperature of 20 °C that is greater than or equal to 14.2 scm/min:

TRE=TRE index value.

Q_s=Vent stream flow rate (scm/min) at a standard temperature of 20 °C.

H_T=Vent stream net heating value (MJ/scm), where the net enthalpy per mole of vent stream is based on combustion at 25 °C and 760 mm Hg, but the standard temperature for determining the volume corresponding to one mole is 20 °C as in the definition of Q_s.

Y_s=Q_s for all vent stream categories listed in Table 1 except for Category E vent streams where $Y_s=(Q_s)(H_T)/3.6$.

E_{TOC}=Hourly emissions of TOC reported in kg/hr.

a, b, c, d, e, and f are coefficients. The set of coefficients that apply to a vent stream can be obtained from Table 1.

TABLE 1.—TOTAL RESOURCE EFFECTIVENESS COEFFICIENTS FOR VENT STREAMS CONTROLLED BY AN INCINERATOR SUBJECT TO THE NEW SOURCE PERFORMANCE STANDARDS FOR REACTOR PROCESSES

	a	b	c	d	e	f
DESIGN CATEGORY A1. FOR HALOGENATED PROCESS VENT STREAMS, IF 0≤NET HEATING VALUE (MJ/scm)≤3.5: *Q_s=Vent Stream Flow Rate (scm/min)*						
14.2≤Q_s≤18.8	19.18370	0.27580	0.75762	−0.13064	0	0.01025
18.8<Q_s≤699	20.00563	0.27580	0.30387	−0.13064	0	0.01025
699<Q_s≤1,400	39.87022	0.29973	0.30387	−0.13064	0	0.01449
1,400<Q_s≤2,100	59.73481	0.31467	0.30387	−0.13064	0	0.01775
2,100<Q_s≤2,800	79.59941	0.32572	0.30387	−0.13064	0	0.02049
2,800<Q_s≤3,500	99.46400	0.33456	0.30387	−0.13064	0	0.02291
DESIGN CATEGORY A2. FOR HALOGENATED PROCESS VENT STREAMS, IF NET HEATING VALUE (MJ/scm)>3.5: *Q_s=Vent Stream Flow Rate (scm/min)*						
14.2<Q_s≤18.8	18.84466	0.26742	−0.20044	0	0	0.01025
18.8<Q_s≤699	19.66658	0.26742	−0.25332	0	0	0.01025
699<Q_s≤1,400	39.19213	0.29062	−0.25332	0	0	0.01449
1,400<Q_s≤2,100	58.71768	0.30511	−0.25332	0	0	0.01775
2,100<Q_s≤2,800	78.24323	0.31582	−0 25332	0	0	0.02049
2,800<Q_s≤3,500	97.76879	0.32439	−0.25332	0	0	0.02291

TABLE 1.—TOTAL RESOURCE EFFECTIVENESS COEFFICIENTS FOR VENT STREAMS CONTROLLED BY AN INCINERATOR SUBJECT TO THE NEW SOURCE PERFORMANCE STANDARDS FOR REACTOR PROCESSES—Continued

	a	b	c	d	e	f
DESIGN CATEGORY B. FOR NONHALOGENATED PROCESS VENT STREAMS, IF 0≤NET HEATING VALUE (MJ/scm)≤0.48: *Q_s=Vent Stream Flow Rate (scm/min)*						
14.2≤Q_s≤1,340	8.54245	0.10555	0.09030	−0.17109	0	0.01025
1,340<Q_s≤2,690	16.94386	0.11470	0.09030	−0.17109	0	0.01449
2,690<Q_s≤4,040	25.34528	0.12042	0.09030	−0.17109	0	0.01775
DESIGN CATEGORY C. FOR NONHALOGENATED PROCESS VENT STREAMS, IF 0.48<NET HEATING VALUE (MJ/scm)≤1.9: *Q_s=Vent Stream Flow Rate (scm/min)*						
14.2≤Q_s≤1,340	9.25233	0.06105	0.31937	−0.16181	0	0.01025
1,340<Q_s≤2,690	18.36363	0.06635	0.31937	−0.16181	0	0.01449
2,690<Q_s≤4,040	27.47492	0.06965	0.31937	−0.16181	0	0.01775
DESIGN CATEGORY D. FOR NONHALOGENATED PROCESS VENT STREAMS, IF 1.9<NET HEATING VALUE (MJ/scm)≤3.6: *Q_s=Vent Stream Flow Rate (scm/min)*						
14.2≤Q_s≤1,180	6.67868	0.06943	0.02582	0	0	0.01025
1,180<Q_s≤2,370	13.21633	0.07546	0.02582	0	0	0.01449
2,370<Q_s≤3,550	19.75398	0.07922	0.02582	0	0	0.01755
DESIGN CATEGORY E. FOR NONHALOGENATED PROCESS VENT STREAMS, IF NET HEATING VALUE (MJ/scm)>3.6: *Y_s=Dilution Flow Rate (scm/min)=(Q_s) (H_T)/3.6*						
14.2≤Y_s≤1,180	6.67868	0	0	−0.00707	0.02220	0.01025
1,180<Y_s≤2,370	13.21633	0	0	−0.00707	0.02412	0.01449
2,370<Y_s≤3,550	19.75398	0	0	−0.00707	0.02533	0.01755

(ii) For a vent stream flow rate (scm/min) at a standard temperature of 20 °C that is less than 14.2 scm/min:

TRE=TRE index value.
Q_s=14.2 scm/min.
H_T=(FLOW)(HVAL)/14.2

where the following inputs are used:

FLOW=Vent stream flow rate (scm/min), at a standard temperature of 20 °C.
HVAL=Vent stream net heating value (MJ/scm), where the net enthalpy per mole of vent stream is based on combustion at 25 °C and 760 mm Hg, but the standard temperature for determining the volume corresponding to one mole is 20 °C as in definition of Q_s.
Y_s=14.2 scm/min for all vent streams except for Category E vent streams, where Y_s=(14.2)(H_T)/3.6.
E_{TOC}=Hourly emissions of TOC reported in kg/hr.

a, b, c, d, e, and f are coefficients. The set of coefficients that apply to a vent stream can be obtained from Table 1.

(2) The equation for calculating the TRE index value of a vent stream controlled by a flare is as follows:

$$TRE = \frac{1}{E_{TOC}}\left[a(Q_s) + b(Q_s)^{0.8} + c(Q_s)(H_T) + d(E_{TOC}) + e\right]$$

where:

TRE=TRE index value.
E_{TOC}=Hourly emission rate of TOC reported in kg/hr.
Q_s=Vent stream flow rate (scm/min) at a standard temperature of 20 °C.
H_T=Vent stream net heating value (MJ/scm) where the net enthalpy per mole of offgas is based on combustion at 25 °C and 760 mm Hg, but the standard temperature for determining the volume corresponding to one mole is 20 °C as in the definition of Q_s.

a, b, c, d, and e are coefficients. The set of coefficients that apply to a vent stream can be obtained from Table 2.

TABLE 2.—TOTAL RESOURCE EFFECTIVENESS COEFFICIENTS FOR VENT STREAMS CONTROLLED BY A FLARE SUBJECT TO THE NEW SOURCE PERFORMANCE STANDARDS FOR REACTOR PROCESSES

	a	b	c	d	e
H_T<11.2 MJ/scm	2.25	0.288	−0.193	−0.0051	2.08
H_T≥11.2 MJ/scm	0.309	0.0619	−0.0043	−0.0034	2.08

(f) Each owner or operator of an affected facility seeking to comply with §60.700(c)(2) or §60.702(c) shall recalculate the TRE index value for that affected facility whenever process changes are made. Examples of process changes include changes in production capacity, feedstock type, or catalyst type, or whenever there is replacement, removal, or addition of recovery equipment. The TRE index value shall be recalculated based on test data, or on best engineering estimates of the effects of the change on the recovery system.

(1) Where the recalculated TRE index value is less than or equal to 1.0, the owner or operator shall notify the Administrator within 1 week of the recalculation and shall conduct a performance test according to the methods and procedures required by §60.704 in order to determine compliance with §60.702 (a) or (b). Performance tests must be conducted as soon as possible after the process change but no later than 180 days from the time of the process change.

(2) Where the recalculated TRE index value is less than or equal to 8.0 but greater than 1.0, the owner or operator shall conduct a performance test in accordance with §60.8 and §60.704 and shall comply with §60.703, §60.704 and §60.705. Performance tests must be conducted as soon as possible after the process change but no later than 180 days from the time of the process change.

(g) Any owner or operator subject to the provisions of this subpart seeking to demonstrate compliance with §60.700(c)(4) shall use Method 2, 2A, 2C, or 2D of appendix A to 40 CFR part 60, as appropriate, for determination of volumetric flow rate.

(h) Each owner or operator seeking to demonstrate that a reactor process vent stream has a TOC concentration for compliance with the low concentration exemption in §60.700(c)(8) shall conduct an initial test to measure TOC concentration.

(1) The sampling site shall be selected as specified in paragraph (d)(1)(i) of this section.

(2) Method 18 or Method 25A of part 60, appendix A shall be used to measure concentration.

(3) Where Method 18 is used to qualify for the low concentration exclusion in §60.700(c)(8), the procedures in §60.704(b)(4) (i) and (iv) shall be used to measure TOC concentration, and the procedures of §60.704(b)(3) shall be used to correct the TOC concentration to 3 percent oxygen. To qualify for the exclusion, the results must demonstrate that the concentration of TOC, corrected to 3 percent oxygen, is below 300 ppm by volume.

(4) Where Method 25A is used, the following procedures shall be used to calculate ppm by volume TOC concentration, corrected to 3 percent oxygen:

(i) Method 25A shall be used only if a single organic compound is greater than 50 percent of total TOC, by volume, in the reactor process vent stream. This compound shall be the principal organic compound.

(ii) The principal organic compound may be determined by either process knowledge or test data collected using an appropriate EPA Reference Method. Examples of information that could constitute process knowledge include calculations based on material balances, process stoichiometry, or previous test results provided the results are still relevant to the current reactor process vent stream conditions.

(iii) The principal organic compound shall be used as the calibration gas for Method 25A.

(iv) The span value for Method 25A shall be 300 ppmv.

(v) Use of Method 25A is acceptable if the response from the high-level calibration gas is at least 20 times the standard deviation of the response from the zero calibration gas when the instrument is zeroed on the most sensitive scale.

(vi) The owner or operator shall demonstrate that the concentration of TOC including methane and ethane measured by Method 25A, corrected to 3 percent oxygen, is below 150 ppm by volume to qualify for the low concentration exclusion in §60.700(c)(8).

(vii) The concentration of TOC shall be corrected to 3 percent oxygen using the procedures and equation in paragraph (b)(3) of this section.

[58 FR 45962, Aug. 31, 1993, as amended at 60 FR 58238, Nov. 27, 1995]

§60.705 Reporting and recordkeeping requirements.

(a) Each owner or operator subject to §60.702 shall notify the Administrator of the specific provisions of §60.702 (§60.702 (a), (b), or (c)) with which the owner or operator has elected to comply. Notification shall be submitted with the notification of initial start-up required by §60.7(a)(3). If an owner or operator elects at a later date to use an alternative provision of §60.702 with which he or she will comply, then the Administrator shall be notified by the owner or operator 90 days before implementing a change and, upon implementing the change, a performance test shall be performed as specified by §60.704 no later than 180 days from initial start-up.

(b) Each owner or operator subject to the provisions of this subpart shall keep an up-to-date, readily accessible record of the following data measured during each performance test, and also include the following data in the report of the initial performance test required under §60.8. Where a boiler or process heater with a design heat input capacity of 44 MW (150 million Btu/hour) or greater is used or where the reactor process vent stream is introduced as the primary fuel to any size boiler or process heater to comply with §60.702(a), a report containing performance test data need not be submitted, but a report containing the information in §60.705(b)(2)(i) is required. The same data specified in this section shall be submitted in the reports of all subsequently required performance tests where either the emission control efficiency of a combustion device, outlet concentration of TOC, or the TRE index value of a vent stream from a recovery system is determined.

(1) Where an owner or operator subject to the provisions of this subpart seeks to demonstrate compliance with §60.702(a) through use of either a thermal or catalytic incinerator:

(i) The average firebox temperature of the incinerator (or the average temperature upstream and downstream of the catalyst bed for a catalytic incinerator), measured at least every 15 minutes and averaged over the same time period of the performance testing, and

(ii) The percent reduction of TOC determined as specified in §60.704(b) achieved by the incinerator, or the concentration of TOC (ppmv, by compound) determined as specified in §60.704(b) at the outlet of the control device on a dry basis corrected to 3 percent oxygen.

(2) Where an owner or operator subject to the provisions of this subpart seeks to demonstrate compliance with §60.702(a) through use of a boiler or process heater:

(i) A description of the location at which the vent stream is introduced into the boiler or process heater, and

(ii) The average combustion temperature of the boiler or process heater with a design heat input capacity of less than 44 MW (150 million Btu/hr) measured at least every 15 minutes and averaged over the same time period of the performance testing.

(3) Where an owner or operator subject to the provisions of this subpart seeks to demonstrate compliance with §60.702(b) through use of a smokeless flare, flare design (i.e., steam-assisted, air-assisted or nonassisted), all visible emission readings, heat content determinations, flow rate measurements, and exit velocity determinations made during the performance test, continuous records of the flare pilot flame

monitoring, and records of all periods of operations during which the pilot flame is absent.

(4) Where an owner or operator subject to the provisions of this subpart seeks to demonstrate compliance with § 60.702(c):

(i) Where an absorber is the final recovery device in the recovery system, the exit specific gravity (or alternative parameter which is a measure of the degree of absorbing liquid saturation, if approved by the Administrator), and average exit temperature, of the absorbing liquid measured at least every 15 minutes and averaged over the same time period of the performance testing (both measured while the vent stream is normally routed and constituted); or

(ii) Where a condenser is the final recovery device in the recovery system, the average exit (product side) temperature measured at least every 15 minutes and averaged over the same time period of the performance testing while the vent stream is routed and constituted normally; or

(iii) Where a carbon adsorber is the final recovery device in the recovery system, the total steam mass flow measured at least every 15 minutes and averaged over the same time period of the performance test (full carbon bed cycle), temperature of the carbon bed after regeneration [and within 15 minutes of completion of any cooling cycle(s)], and duration of the carbon bed steaming cycle (all measured while the vent stream is routed and constituted normally); or

(iv) As an alternative to § 60.705(b)(4)(i), (ii) or (iii), the concentration level or reading indicated by the organics monitoring device at the outlet of the absorber, condenser, or carbon adsorber, measured at least every 15 minutes and averaged over the same time period of the performance testing while the vent stream is normally routed and constituted.

(v) All measurements and calculations performed to determine the TRE index value of the vent stream.

(c) Each owner or operator subject to the provisions of this subpart shall keep up-to-date, readily accessible continuous records of the equipment operating parameters specified to be monitored under § 60.703 (a) and (c) as well as up-to-date, readily accessible records of periods of operation during which the parameter boundaries established during the most recent performance test are exceeded. The Administrator may at any time require a report of these data. Where a combustion device is used to comply with § 60.702(a), periods of operation during which the parameter boundaries established during the most recent performance tests are exceeded are defined as follows:

(1) For thermal incinerators, all 3-hour periods of operation during which the average combustion temperature was more than 28 °C (50 °F) below the average combustion temperature during the most recent performance test at which compliance with § 60.702(a) was determined.

(2) For catalytic incinerators, all 3-hour periods of operation during which the average temperature of the vent stream immediately before the catalyst bed is more than 28 °C (50 °F) below the average temperature of the vent stream during the most recent performance test at which compliance with § 60.702(a) was determined. The owner or operator also shall record all 3-hour periods of operation during which the average temperature difference across the catalyst bed is less than 80 percent of the average temperature difference of the bed during the most recent performance test at which compliance with § 60.702(a) was determined.

(3) All 3-hour periods of operation during which the average combustion temperature was more than 28 °C (50 °F) below the average combustion temperature during the most recent performance test at which compliance with § 60.702(a) was determined for boilers or process heaters with a design heat input capacity of less than 44 MW (150 million Btu/hr) where the vent stream is introduced with the combustion air or as a secondary fuel.

(4) For boilers or process heaters, whenever there is a change in the location at which the vent stream is introduced into the flame zone as required under § 60.702(a).

(d) Each owner or operator subject to the provisions of this subpart shall keep records of the following:

(1) Up-to-date, readily accessible continuous records of the flow indication specified under § 60.703(a)(2)(i), § 60.703(b)(2)(i) and § 60.703(c)(1)(i), as well as up-to-date, readily accessible records of all periods and the duration when the vent stream is diverted from the control device.

(2) Where a seal mechanism is used to comply with § 60.703(a)(2)(ii), § 60.703(b)(2)(ii), and § 60.703(c)(1)(ii), a record of continuous flow is not required. In such cases, the owner or operator shall keep up-to-date, readily accessible records of all monthly visual inspections of the seals as well as readily accessible records of all periods and the duration when the seal mechanism is broken, the bypass line valve position has changed, the serial number of the broken car-seal has changed, or when the key for a lock-and-key type configuration has been checked out.

(e) Each owner or operator subject to the provisions of this subpart shall keep up-to-date, readily accessible continuous records of the flare pilot flame monitoring specified under § 60.703(b), as well as up-to-date, readily accessible records of all periods of operations in which the pilot flame is absent.

(f) Each owner or operator subject to the provisions of this subpart shall keep up-to-date, readily accessible continuous records of the equipment operating parameters specified to be monitored under § 60.703(d), as well as up-to-date, readily accessible records of periods of operation during which the parameter boundaries established during the most recent performance test are exceeded. The Administrator may at any time require a report of these data. Where an owner or operator seeks to comply with § 60.702(c), periods of operation during which the parameter boundaries established during the most recent performance tests are exceeded are defined as follows:

(1) Where an absorber is the final recovery device in a recovery system, and where an organic compound monitoring device is not used:

(i) All 3-hour periods of operation during which the average absorbing liquid temperature was more than 11 °C (20 °F) above the average absorbing liquid temperature during the most recent performance test, or

(ii) All 3-hour periods of operation during which the average absorbing liquid specific gravity was more than 0.1 unit above, or more than 0.1 unit below, the average absorbing liquid specific gravity during the most recent performance test (unless monitoring of an alternative parameter, which is a measure of the degree of absorbing liquid saturation, is approved by the Administrator, in which case he will define appropriate parameter boundaries and periods of operation during which they are exceeded).

(2) Where a condenser is the final recovery device in a system, and where an organic compound monitoring device is not used, all 3-hour periods of operation during which the average exit (product side) condenser operating temperature was more than 6 °C (11 °F) above the average exit (product side) operating temperature during the most recent performance test.

(3) Where a carbon adsorber is the final recovery device in a system, and where an organic compound monitoring device is not used:

(i) All carbon bed regeneration cycles during which the total mass steam flow was more than 10 percent below the total mass steam flow during the most recent performance test, or

(ii) All carbon bed regeneration cycles during which the temperature of the carbon bed after regeneration (and after completion of any cooling cycle(s)) was more than 10 percent or 5 °C greater, whichever is less stringent, than the carbon bed temperature (in degrees Celsius) during the most recent performance test.

(4) Where an absorber, condenser, or carbon adsorber is the final recovery device in the recovery system and where an organic compound monitoring device is used, all 3-hour periods of operation during which the average organic compound concentration level or reading of organic compounds in the exhaust gases is more than 20 percent greater than the exhaust gas organic compound concentration level or reading measured by the monitoring device during the most recent performance test.

(g) Each owner or operator of an affected facility subject to the provisions

of this subpart and seeking to demonstrate compliance with §60.702(c) shall keep up-to-date, readily accessible records of:

(1) Any changes in production capacity, feedstock type, or catalyst type, or of any replacement, removal or addition of recovery equipment or reactors;

(2) Any recalculation of the TRE index value performed pursuant to §60.704(f); and

(3) The results of any performance test performed pursuant to the methods and procedures required by §60.704(d).

(h) Each owner or operator of an affected facility that seeks to comply with the requirements of this subpart by complying with the flow rate cutoff in §60.700(c)(4) shall keep up-to-date, readily accessible records to indicate that the vent stream flow rate is less than 0.011 scm/min and of any change in equipment or process operation that increases the operating vent stream flow rate, including a measurement of the new vent stream flow rate.

(i) Each owner or operator of an affected facility that seeks to comply with the requirements of this subpart by complying with the design production capacity provision in §60.700(c)(3) shall keep up-to-date, readily accessible records of any change in equipment or process operation that increases the design production capacity of the process unit in which the affected facility is located.

(j) Each owner or operator of an affected facility that seeks to comply with the requirements of this subpart by complying with the low concentration exemption in §60.700(c)(8) shall keep up-to-date, readily accessible records of any change in equipment or process operation that increases the concentration of the vent stream of the affected facility.

(k) Each owner or operator subject to the provisions of this subpart is exempt from the quarterly reporting requirements contained in §60.7(c) of the General Provisions.

(l) Each owner or operator that seeks to comply with the requirements of this subpart by complying with the requirements of §60.700 (c)(2), (c)(3), or (c)(4) or §60.702 shall submit to the Administrator semiannual reports of the following recorded information. The initial report shall be submitted within 6 months after the initial start-up date.

(1) Exceedances of monitored parameters recorded under §60.705 (c), (f), and (g).

(2) All periods and duration recorded under §60.705(d) when the vent stream is diverted from the control device to the atmosphere.

(3) All periods recorded under §60.705(f) in which the pilot flame of the flare was absent.

(4) Any change in equipment or process operation that increases the operating vent stream flow rate above the low flow exemption level in §60.700(c)(4), including a measurement of the new vent stream flow rate, as recorded under §60.705(i). These must be reported as soon as possible after the change and no later than 180 days after the change. These reports may be submitted either in conjunction with semiannual reports or as a single separate report. A performance test must be completed within the same time period to verify the recalculated flow value and to obtain the vent stream characteristics of heating value and E_{TOC}. The performance test is subject to the requirements of §60.8 of the General Provisions. Unless the facility qualifies for an exemption under any of the exemption provisions listed in §60.700(c), except for the total resource effectiveness index greater than 8.0 exemption in §60.700(c)(2), the facility must begin compliance with the requirements set forth in §60.702.

(5) Any change in equipment or process operation, as recorded under §60.705(i), that increases the design production capacity above the low capacity exemption level in §60.700(c)(3) and the new capacity resulting from the change for the reactor process unit containing the affected facility. These must be reported as soon as possible after the change and no later than 180 days after the change. These reports may be submitted either in conjunction with semiannual reports or as a single separate report. A performance test must be completed within the same time period to obtain the vent stream flow rate, heating value, and E_{TOC}. The performance test is subject

to the requirements of §60.8 of the General Provisions. Unless the facility qualifies for an exemption under any of the exemption provisions listed in §60.700(c), the facility must begin compliance with the requirements set forth in §60.702.

(6) Any recalculation of the TRE index value, as recorded under §60.705(g).

(7) All periods recorded under §60.705(d) in which the seal mechanism is broken or the by-pass line valve position has changed. A record of the serial number of the car-seal or a record to show that the key to unlock the bypass line valve was checked out must be maintained to demonstrate the period, the duration, and frequency in which the bypass line was operated.

(8) Any change in equipment or process operation that increases the vent stream concentration above the low concentration exemption level in §60.700(c)(8), including a measurement of the new vent stream concentration, as recorded under §60.705(j). These must be reported as soon as possible after the change and no later than 180 days after the change. These reports may be submitted either in conjunction with semiannual reports or as a single separate report. If the vent stream concentration is above 300 ppmv as measured using Method 18 or above 150 ppmv as measured using Method 25A, a performance test must be completed within the same time period to obtain the vent stream flow rate, heating value, and E_{TOC}. The performance test is subject to the requirements of §60.8 of the General Provisions. Unless the facility qualifies for an exemption under any of the exemption provisions listed in §60.700(c), except for the TRE index greater than 8.0 exemption in §60.700(c)(2), the facility must begin compliance with the requirements set forth in §60.702.

(m) The requirements of §60.705(l) remain in force until and unless EPA, in delegating enforcement authority to a State under section 111(c) of the Act, approves reporting requirements or an alternative means of compliance surveillance adopted by such State. In that event, affected sources within the State will be relieved of the obligation to comply with §60.705(l), provided that they comply with the requirements established by the State.

(n) Each owner or operator that seeks to demonstrate compliance with §60.700(c)(3) must submit to the Administrator an initial report detailing the design production capacity of the process unit.

(o) Each owner or operator that seeks to demonstrate compliance with §60.700(c)(4) must submit to the Administrator an initial report including a flow rate measurement using the test methods specified in §60.704.

(p) Each owner or operator that seeks to demonstrate compliance with §60.700(c)(8) must submit to the Administrator an initial report including a concentration measurement using the test method specified in §60.704.

(q) The Administrator will specify appropriate reporting and recordkeeping requirements where the owner or operator of an affected facility complies with the standards specified under §60.702 other than as provided under §60.703 (a), (b), (c), and (d).

(r) Each owner or operator whose reactor process vent stream is routed to a distillation unit subject to subpart NNN and who seeks to demonstrate compliance with §60.700(c)(5) shall submit to the Administrator a process design description as part of the initial report. This process design description must be retained for the life of the process. No other records or reports would be required unless process changes are made.

(s) Each owner or operator who seeks to demonstrate compliance with §60.702 (a) or (b) using a control device must maintain on file a schematic diagram of the affected vent streams, collection system(s), fuel systems, control devices, and bypass systems as part of the initial report. This schematic diagram must be retained for the life of the system.

(t) Each owner or operator that seeks to demonstrate compliance with §60.700(c)(2) must maintain a record of the initial test for determining the total resource effectiveness index and the results of the initial total resource effectiveness index calculation.

[58 FR 45962, Aug. 31, 1993, as amended at 60 FR 58238, Nov. 27, 1995]

§ 60.706 Reconstruction.

(a) For purposes of this subpart ''fixed capital cost of the new components,'' as used in § 60.15, includes the fixed capital cost of all depreciable components which are or will be replaced pursuant to all continuous programs of component replacement which are commenced within any 2-year period following June 29, 1990. For purposes of this paragraph, ''commenced'' means that an owner or operator has undertaken a continuous program of component replacement or that an owner or operator has entered into a contractual obligation to undertake and complete, within a reasonable time, a continuous program of component replacement.

(b) [Reserved]

§ 60.707 Chemicals affected by subpart RRR.

Chemical	CAS No.[1]
Acetaldehyde	75–07–0
Acetic acid	64–19–7
Acetic anhydride	108–24–7
Acetone	67–64–1
Acetone cyanohydrin	75–86–5
Acetylene	74–86–2
Acrylic acid	79–10–7
Acrylonitrile	107–13–1
Adipic acid	124–04–9
Adiponitrile	111–69–3
Alcohols, C–11 or lower, mixtures.	
Alcohols, C–12 or higher, mixtures.	
Alcohols, C–12 or higher, unmixed.	
Allyl chloride	107–05–1
Amylene	513–35–9
Amylenes, mixed.	
Aniline	62–53–3
Benzene	71–43–2
Benzenesulfonic acid	98–11–3
Benzenesulfonic acid $C_{10–16}$-alkyl derivatives, sodium salts	68081–81–2
Benzyl chloride	100–44–7
Bisphenol A	80–05–7
Brometone	76–08–4
1,3-Butadiene	106–99–0
Butadiene and butene fractions.	
n-Butane	106–97–8
1,4-Butanediol	110–63–4
Butanes, mixed.	
1-Butene	106–98–9
2-Butene	25167–67–3
Butenes, mixed.	
n-Butyl acetate	123–86–4
Butyl acrylate	141–32–2
n-Butyl alcohol	71–36–3
sec-Butyl alcohol	78–92–2
tert-Butyl alcohol	75–65–0
Butylbenzyl phthalate	85–68–7
tert-Butyl hydroperoxide	75–91–2
2-Butyne-1,4-diol	110–65–6
Butyraldehyde	123–72–8
Butyric anhydride	106–31–0
Caprolactam	105–60–2
Carbon disulfide	75–15–0
Carbon tetrachloride	56–23–5
Chloroacetic acid	79–11–8
Chlorobenzene	108–90–7
Chlorodifluoromethane	75–45–6
Chloroform	67–66–3
p-Chloronitrobenzene	100–00–5
Citric acid	77–92–9
Cumene	98–82–8
Cumene hydroperoxide	80–15–9
Cyanuric chloride	108–77–0
Cyclohexane	110–82–7
Cyclohexane, oxidized	68512–15–2
Cyclohexanol	108–93–0
Cyclohexanone	108–94–1
Cyclohexanone oxime	100–64–1
Cyclohexene	110–83–8
Cyclopropane	75–19–4
Diacetone alcohol	123–42–2
1,4-Dichlorobutene	110–57–6
3,4-Dichloro-1-butene	64037–54–3
Dichlorodifluoromethane	75–71–8
Dichlorodimethylsilane	75–78–5
Dichlorofluoromethane	75–43–4
Diethanolamine	111–42–2
Diethylbenzene	25340–17–4
Diethylene glycol	111–46–6
Di-isodecyl phthalate	26761–40–0
Dimethyl terephthalate	120–61–6
2,4-(and 2,6)-dinitrotoluene	121–14–2 606–20–2
Dioctyl phthalate	117–81–7
Dodecene	25378–22–7
Dodecylbenzene, nonlinear.	
Dodecylbenzenesulfonic acid	27176–87–0
Dodecylbenzenesulfonic acid, sodium salt	25155–30–0
Epichlorohydrin	106–89–8
Ethanol	64–17–5
Ethanolamine	141–43–5
Ethyl acetate	141–78–6
Ethyl acrylate	140–88–5
Ethylbenzene	100–41–4
Ethyl chloride	75–00–3
Ethylene	74–85–1
Ethylene dibromide	106–93–4
Ethylene dichloride	107–06–2
Ethylene glycol	107–21–1
Ethylene glycol monobutyl ether	111–76–2
Ethylene glycol monoethyl ether acetate	111–15–9
Ethylene glycol monomethyl ether	109–86–4
Ethylene oxide	75–21–8
2-Ethylhexyl alcohol	104–76–7
(2-Ethylhexyl) amine	104–75–6
6-Ethyl-1,2,3,4-tetrahydro 9,10-anthracenedione	15547–17–8
Formaldehyde	50–00–0
Glycerol	56–81–5
n-Heptane	142–82–5
Heptenes (mixed).	
Hexamethylene diamine	124–09–4
Hexamethylene diamine adipate	3323–53–3
Hexamethylenetetramine	100–97–0
Hexane	110–54–3
Isobutane	75–28–5
Isobutanol	78–83–1
Isobutylene	115–11–7
Isobutyraldehyde	78–84–2
Isopentane	78–78–4
Isoprene	78–79–5
Isopropanol	67–63–0
Ketene	463–51–4
Linear alcohols, ethoxylated, mixed.	
Linear alcohols, ethoxylated, and sulfated, sodium salt, mixed.	
Linear alcohols, sulfated, sodium salt, mixed.	

Chemical	CAS No.[1]
Linear alkylbenzene	123–01–3
Maleic anhydride	108–31–6
Mesityl oxide	141–79–7
Methanol	67–56–1
Methylamine	74–39–5
ar-Methylbenzenediamine	25376–45–8
Methyl chloride	74–87–3
Methylene chloride	75–09–2
Methyl ethyl ketone	78–93–3
Methyl isobutyl ketone	108–10–1
Methyl methacrylate	80–62–6
1-Methyl-2-pyrrolidone	872–50–4
Methyl tert-butyl ether.	
Naphthalene	91–20–3
Nitrobenzene	98–95–3
1-Nonene	27215–95–8
Nonyl alcohol	143–08–8
Nonylphenol	25154–52–3
Nonylphenol, ethoxylated	9016–45–9
Octene	25377–83–7
Oil-soluble petroleum sulfonate, calcium salt.	
Pentaerythritol	115–77–5
3-Pentenenitrile	4635–87–4
Pentenes, mixed	109–67–1
Perchloroethylene	127–18–4
Phenol	108–95–2
1-Phenylethyl hydroperoxide	3071–32–7
Phenylpropane	103–65–1
Phosgene	75–44–5
Phthalic anhydride	85–44–9
Propane	74–98–6
Propionaldehyde	123–38–6
Propyl alcohol	71–23–8
Propylene	115–07–1
Propylene glycol	57–55–6
Propylene oxide	75–56–9
Sorbitol	50–70–4
Styrene	100–42–5
Terephthalic acid	100–21–0
Tetraethyl lead	78–00–2
Tetrahydrofuran	109–99–9
Tetra (methyl-ethyl) lead.	
Tetramethyl lead	75–74–1
Toluene	108–88–3
Toluene-2,4-diamine	95–80–7
Toluene-2,4-(and, 2,6)-diisocyanate (80/20 mixture)	26471–62–5
1,1,1-Trichloroethane	71–55–6
1,1,2-Trichloroethane	79–00–5
Trichloroethylene	79–01–6
Trichlorofluoromethane	75–69–4
1,1,2-Trichloro-1,2,2-trifluoroethane	76–13–1
Triethanolamine	102–71–6
Triethylene glycol	112–27–6
Vinyl acetate	108–05–4
Vinyl chloride	75–01–4
Vinylidene chloride	75–35–4
m-Xylene	108–38–3
o-Xylene	95–47–6
p-Xylene	106–42–3
Xylenes (mixed)	1330–20–7

[1] CAS numbers refer to the Chemical Abstracts Registry numbers assigned to specific chemicals, isomers, or mixtures of chemicals. Some isomers or mixtures that are covered by the standards do not have CAS numbers assigned to them. The standards apply to all of the chemicals listed, whether CAS numbers have been assigned or not.

[58 FR 45962, Aug. 31, 1993, as amended at 60 FR 58238, Nov. 27, 1995]

§ 60.708 Delegation of authority.

(a) In delegating implementation and enforcement authority to a State under section 111(c) of the Act, the authorities contained in paragraph (b) of this section shall be retained by the Administrator and not transferred to a State.

(b) Authorities which will not be delegated to States: § 60.703(e).

Subpart SSS—Standards of Performance for Magnetic Tape Coating Facilities

SOURCE: 53 FR 38914, Oct. 3, 1988, unless otherwise noted.

§ 60.710 Applicability and designation of affected facility.

(a) The affected facilities to which the provisions of this subpart apply are:

(1) Each coating operation; and

(2) Each piece of coating mix preparation equipment.

(b) Any new coating operation that utilizes less than 38 m^3 of solvent or any modified or reconstructed coating operation that utilizes less than 370 m^3 of solvent for the manufacture of magnetic tape per calendar year is subject only to the requirements of §§ 60.714(a), 60.717(b), and 60.717(c). If the amount of solvent utilized for the manufacture of magnetic tape equals or exceeds these amounts in any calendar year, the facility is subject to § 60.712 and all other sections of this subpart. Once a facility has become subject to § 60.712 and all other sections of this subpart, it will remain subject to those requirements regardless of changes in annual solvent utilization.

(c) This subpart applies to any affected facility for which construction, modification, or reconstruction begins after January 22, 1986.

§ 60.711 Definitions, symbols, and cross reference tables.

(a) All terms used in this subpart that are not defined below have the meaning given to them in the Act and in subpart A of this part.

(1) *Base film* means the substrate that is coated to produce magnetic tape.

(2) *Capture system* means any device or combination of devices that contains or collects an airborne pollutant and directs it into a duct.

(3) *Coating applicator* means any apparatus used to apply a coating to a continuous base film.

(4) *Coating mix preparation equipment* means all mills, mixers, holding tanks, polishing tanks, and other equipment used in the preparation of the magnetic coating formulation but does not include those mills that do not emit VOC because they are closed, sealed, and operated under pressure.

(5) *Coating operation* means any coating applicator, flashoff area, and drying oven located between a base film unwind station and a base film rewind station that coat a continuous base film to produce magnetic tape.

(6) *Common emission control device* means a control device controlling emissions from the coating operation as well as from another emission source within the plant.

(7) *Concurrent* means construction of a control device is commenced or completed within the period beginning 6 months prior to the date construction of affected coating mix preparation equipment commences and ending 2 years after the date construction of affected coating mix preparation equipment is completed.

(8) *Control device* means any apparatus that reduces the quantity of a pollutant emitted to the air.

(9) *Cover* means, with respect to coating mix preparation equipment, a device that lies over the equipment opening to prevent VOC from escaping and that meets the requirements found in § 60.712(c)(1)–(5).

(10) *Drying oven* means a chamber in which heat is used to bake, cure, polymerize, or dry a surface coating.

(11) *Equivalent diameter* means four times the area of an opening divided by its perimeter.

(12) *Flashoff area* means the portion of a coating operation between the coating applicator and the drying oven where solvent begins to evaporate from the coated base film.

(13) *Magnetic tape* means any flexible substrate that is covered on one or both sides with a coating containing magnetic particles and that is used for audio or video recording or information storage.

(14) *Natural draft opening* means any opening in a room, building, or total enclosure that remains open during operation of the facility and that is not connected to a duct in which a fan is installed. The rate and direction of the natural draft across such an opening is a consequence of the difference in pressures on either side of the wall containing the opening.

(15) *Nominal 1-month period* means a calendar month or, if established prior to the performance test in a statement submitted with notification of anticipated startup pursuant to 40 CFR 60.7(a)(2), a similar monthly time period (e.g., 30-day month or accounting month).

(16) *Temporary enclosure* means a total enclosure that is constructed for the sole purpose of measuring the fugitive emissions from an affected facility. A temporary enclosure must be constructed and ventilated (through stacks suitable for testing) so that it has minimal impact on the performance of the permanent capture system. A temporary enclosure will be assumed to achieve total capture of fugitive VOC emissions if it conforms to the requirements found in § 60.713(b)(5)(i) and if all natural draft openings are at least four duct or hood equivalent diameters away from each exhaust duct or hood. Alternatively, the owner or operator may apply to the Administrator for approval of a temporary enclosure on a case-by-case basis.

(17) *Total enclosure* means a structure that is constructed around a source of emissions so that all VOC emissions are collected and exhausted through a stack or duct. With a total enclosure, there will be no fugitive emissions, only stack emissions. The only openings in a total enclosure are forced makeup air and exhaust ducts and any natural draft openings such as those that allow raw materials to enter and exit the enclosure for processing. All access doors or windows are closed during routine operation of the enclosed source. Brief, occasional openings of such doors or windows to accommodate process equipment adjustments are acceptable, but, if such openings are routine or if an access door remains open

during the entire operation, the access door must be considered a natural draft opening. The average inward face velocity across the natural draft openings of the enclosure must be calculated including the area of such access doors. The drying oven itself may be part of the total enclosure. A permanent enclosure that meets the requirements found in § 60.713(b)(5)(i) is assumed to be a total enclosure. The owner or operator of a permanent enclosure that does not meet the requirements may apply to the Administrator for approval of the enclosure as a total enclosure on a case-by-case basis. Such approval shall be granted upon a demonstration to the satisfaction of the Administrator that all VOC emissions are contained and vented to the control device.

(18) *Utilize* refers to the use of solvent that is delivered to coating mix preparation equipment for the purpose of formulating coatings to be applied on an affected coating operation and any other solvent (e.g., dilution solvent) that is added at any point in the manufacturing process.

(19) *VOC content of the coating applied* means the product of Method 24 VOC analyses or formulation data (if the data are demonstrated to be equivalent to Method 24 results) and the total volume of coating fed to the coating applicator. This quantity is intended to include all VOC that actually are emitted from the coating operation in the gaseous phase. Thus, for purposes of the liquid-liquid VOC material balance in § 60.713(b)(1), any VOC (including dilution solvent) added to the coatings must be accounted for, and any VOC contained in waste coatings or retained in the final product may be measured and subtracted from the total. (These adjustments are not necessary for the gaseous emission test compliance provisions of § 60.713(b).)

(20) *Volatile Organic Compounds* or *VOC* means any organic compounds that participate in atmospheric photochemical reactions or that are measured by Method 18, 24, 25, or 25A or an equivalent or alternative method as defined in 40 CFR 60.2.

(b) The nomenclature used in this subpart has the following meaning:

(1) A_k=the area of each natural draft opening (k) in a total enclosure, in square meters.
(2) C_{aj}=the concentration of VOC in each gas stream (j) exiting the emission control device, in parts per million by volume.
(3) C_{bi}=the concentration of VOC in each gas stream (i) entering the emission control device, in parts per million by volume.
(4) C_{di}=the concentration of VOC in each gas stream (i) entering the emission control device from the affected coating operation, in parts per million by volume.
(5) C_{fk}=the concentration of VOC in each uncontrolled gas stream (k) emitted directly to the atmosphere from the affected coating operation, in parts per million by volume.
(6) C_{gv}=the concentration of VOC in the gas stream entering each individual carbon adsorber vessel (v), in parts per million by volume. For the purposes of calculating the efficiency of the individual adsorber vessel, C_{gv} may be measured in the carbon adsorption system's common inlet duct prior to the branching of individual inlet ducts.
(7) C_{hv}=the concentration of VOC in the gas stream exiting each individual carbon adsorber vessel (v), in parts per million by volume.
(8) E=the control device efficiency achieved for the duration of the emission test (expressed as a fraction).
(9) F=the VOC emission capture efficiency of the VOC capture system achieved for the duration of the emission test (expressed as a fraction).
(10) FV=the average inward face velocity across all natural draft openings in a total enclosure, in meters per hour.
(11) G=the calculated weighted average mass of VOC per volume of coating solids (in kilograms per liter) applied each nominal 1-month period.
(12) H_v=the individual carbon adsorber vessel (v) efficiency achieved for the duration of the emission test (expressed as a fraction).
(13) H_{sys}=the carbon adsorption system efficiency calculated when each adsorber vessel has an individual exhaust stack.
(14) L_{si}=the volume fraction of solids in each coating (i) applied during a nominal 1-month period as determined from the facility's formulation records.
(15) M_{ci}=the total mass in kilograms of each coating (i) applied at an affected coating operation during a nominal 1-month period as determined from facility records. This quantity shall be determined at a time and location in the process after all ingredients (including any dilution solvent) have been added to the coating, or appropriate adjustments shall be made to account for any ingredients added after the mass of the coating has been determined.

(16) M_r=the total mass in kilograms of VOC recovered for a nominal 1-month period.

(17) Q_{aj}=the volumetric flow rate of each gas stream (j) exiting the emission control device, in dry standard cubic meters per hour when Method 18 or 25 is used to measure VOC concentration or in standard cubic meters per hour (wet basis) when Method 25A is used to measure VOC concentration.

(18) Q_{bi}=the volumetric flow rate of each gas stream (i) entering the emission control device, in dry standard cubic meters per hour when Method 18 or 25 is used to measure VOC concentration or in standard cubic meters per hour (wet basis) when Method 25A is used to measure VOC concentration.

(19) Q_{di}=the volumetric flow rate of each gas stream (i) entering the emission control device from the affected coating operation, in dry standard cubic meters per hour when Method 18 or 25 is used to measure VOC concentration or in standard cubic meters per hour (wet basis) when Method 25A is used to measure VOC concentration.

(20) Q_{fk}=the volumetric flow rate of each uncontrolled gas stream (k) emitted directly to the atmosphere from the affected coating operation, in dry standard cubic meters per hour when Method 18 or 25 is used to measure VOC concentration or in standard cubic meters per hour (wet basis) when Method 25A is used to measure VOC concentration.

(21) Q_{gv}=the volumetric flow rate of the gas stream entering each individual carbon adsorber vessel (v), in dry standard cubic meters per hour when Method 18 or 25 is used to measure VOC concentration or in standard cubic meters per hour (wet basis) when Method 25A is used to measure VOC concentration. For purposes of calculating the efficiency of the individual adsorber vessel, the value of Q_{gv} can be assumed to equal the value of Q_{hv} measured for that adsorber vessel.

(22) Q_{hv}=the volumetric flow rate of the gas stream exiting each individual carbon adsorber vessel (v), in dry standard cubic meters per hour when Method 18 or 25 is used to measure VOC concentration or in standard cubic meters per hour (wet basis) when Method 25A is used to measure VOC concentration.

(23) Q_{ini}=the volumetric flow rate of each gas stream (i) entering the total enclosure through a forced makeup air duct, in standard cubic meters per hour (wet basis).

(24) Q_{outj}=the volumetric flow rate of each gas stream (j) exiting the total enclosure through an exhaust duct or hood, in standard cubic meters per hour (wet basis).

(25) R=the overall VOC emission reduction achieved for the duration of the emission test (expressed as a percentage).

(26) RS_i=the total mass (kg) of VOC retained in the coated base film after oven drying for a given magnetic tape product.

(27) V_{ci}=the total volume in liters of each coating (i) applied during a nominal 1-month period as determined from facility records.

(28) W_{oi}=the weight fraction of VOC in each coating (i) applied at an affected coating operation during a nominal 1-month period as determined by Method 24. This value shall be determined at a time and location in the process after all ingredients (including any dilution solvent) have been added to the coating, or appropriate adjustments shall be made to account for any ingredients added after the weight fraction of VOC in the coating has been determined.

(c) Tables 1a and 1b present a cross reference of the affected facility status and the relevant section(s) of the regulation.

TABLE 1A—CROSS REFERENCE [a] [b]

Status	Standard [c]	Compliance provisions [d]—§ 60.713
A. Coating operation alone:		
New	§60.712(a): Recover or destroy at least 93 percent of the VOC applied	(b)(1), (b)(2), (b)(3), (b)(4), (b)(5), (c), (d)
Modified or reconstructed:		
1. If at least 90 percent of the VOC applied is recovered or destroyed prior to modification/reconstruction.	§60.712(b)(1): (i) Maintain demonstrated level of VOC control or 93 percent, whichever is lower. (ii) If the VOC control device is subsequently replaced, the new control device must be at least 95 percent efficient, a demonstration must be made that the overall level of VOC control is at least as high as required with the old control device (90 to 93 percent) and, if the demonstrated level is higher than the old level, maintain the higher level of control (up to 93 percent).	(a)(1), (a)(3), (b)(1), (b)(2), (b)(3), (b)(4), (c), (d)
2. If existing coating operation has a total enclosure vented to a control device that is at least 92 percent efficient.	§60.712(b)(2): (i) Continue to vent all VOC emissions to the control device and maintain control efficiency at or above the demonstrated level or 95 percent, whichever is lower. (ii) If the VOC control device is subsequently replaced, the new control device must be at least 95 percent efficient and all VOC emissions must be vented from the total enclosure to the new control device.	(a)(2), (b)(5), (c), (d)
3. If existing coating operation is not in the previous two categories.	§60.712(b)(3): Recover or destroy at least 93 percent of the VOC applied	(b)(1), (b)(2), (b)(3), (b)(4), (b)(5), (c), (d)
B. Coating mix preparation equipment alone:		
New:		
1. With concurrent construction of new VOC control device (other than a condenser) on the coating operation.	§60.712(c): Install and use covers and vent to a control device that is at least 95 percent efficient [e].	(b)(6)
2. Without concurrent construction of new VOC control device on the coating operation *or* with concurrent construction of a condenser.	§60.712 (d)(1) *or* (d)(2): Install and use covers and vent to a control device *or* install and use covers [e].	(b)(7), (b)(8)
Modified or reconstructed	§60.712 (d)(1) *or* (d)(2): Install and use covers and vent to a control device *or* install and use covers [e].	(b)(7), (b)(8)
C. Both coating operation and coating mix preparation equipment: New and modified or reconstructed.	§60.712(e): In lieu of standards in §60.712(a)–(d), use coatings containing a maximum of 0.20 kg VOC per liter of coating solids.	(b)(9)

[a] This table is presented for the convenience of the user and is not intended to supercede the language of the regulation. For the details of the requirements, refer to the text of the regulation.

[b] Refer to Part B to determine which subsections of §§60.714, 60.715, and 60.717 correspond to each compliance provision (§60.713).

[c] As per §60.710(b), any new coating operation with solvent utilization <38 m^3/yr or any modified or reconstructed coating operation with solvent utilization <370 m^3/yr is exempt from the VOC standards (§60.712). Such coating operations are subject only to §§60.714(a), 60.717(b), and 60.717(c). However, should a coating operation once exceed the applicable annual solvent utilization cutoff, that coating operation shall be subject to the VOC standards (§60.712) and all other sections of the subpart. Once this has occurred, the coating operation shall remain subject to those requirements regardless of changes in annual solvent utilization.

[d] As applicable.

[e] Section 60.716 permits the use of an alternative means of VOC emission limitation that achieves an equivalent or greater VOC emission reduction.

TABLE 1B—CROSS REFERENCE

Compliance provisions [a]—§60.713	Test methods—§ 60.715	Category/equipment [b]	Installation of monitoring devices and recordkeeping—§ 60.714	Reporting and monitoring requirements [c]—§ 60.717
A. Coating operation alone:				
(b)(1)—When emissions from only the affected coating operation are controlled by a solvent recovery device, perform a liquid-liquid VOC material balance.	(a)		(b), (i), (k)	(a), (d)(1), (e), (h), (i)
(b)(2)—When emissions from only the affected coating operation are controlled by an incinerator or when a common emission control device (other than a carbon adsorption system with individual exhaust stacks for each adsorber vessel) is used to control emissions from an affected coating operation as well as from other sources of VOC, perform a gaseous emission test.	(b)–(g)	General	(i), (k)	(a), (e), (h), (i)
		CA	(c)	(d)(3), (d)(4)
		CO	(d)	(d)(5)
		TI	(e)	(d)(6)
		CI	(f)	(d)(7)
		PE, TE	(g)	(d)(8)
(b)(3)—When emissions from both the affected coating operation and from other sources of VOC are controlled by a carbon adsorption system with individual exhaust stacks for each adsorber vessel, perform a gaseous emission test.	(b)–(g)	General	(i), (k)	(a), (e), (h), (i)
		CA	(c)	(d)(3), (d)(4)
		PE, TE	(g)	(d)(8)
(b)(4)—When emissions from more than one affected coating operation are vented through the same duct to a control device also controlling emissions from nonaffected sources that are vented separately from the affected coating operations, consider the combined affected coating operations as a single emission source and conduct a compliance test described in § 60.713(b)(2) or (3).	(b)–(g)	General	(i), (k)	(a), (e), (h), (i)
		CA	(c)	(d)(3), (d)(4)
		CO	(d)	(d)(5)
		TI	(e)	(d)(6)
		CI	(f)	(d)(7)
		PE, TE	(g)	(d)(8)
(b)(5)—Alternative to § 60.713(b)(1)–(4): Demonstrate that a total enclosure is installed around the coating operation and that all VOC emissions are vented to a control device with the specified efficiency.	(b)–(g)	General	(i), (k)	(a), (e) (h), (i)
		CA	(c)	(d)(3), (d)(4)
		CO	(d)	(d)(5)
		TI	(e)	(d)(6)
		CI	(f)	(d)(7)
		TE	(h)	(d)(8)
B. Coating mix preparation equipment alone:				
(b)(6)—Demonstrate that covers meeting the requirements of § 60.712(c)(1)–(5) are installed and used properly; procedures detailing the proper use of covers are posted; the mix equipment is vented to a control device; and the control device efficiency is greater than or equal to 95 percent.	(b)–(g)	General	(k)	(a), (e), (h), (i)
		CA	(c)	(d)(3), (d)(4)
		TI	(e)	(d)(6)
		CI	(f)	(d)(7)
(b)(7)—Demonstrate that covers meeting the requirements of § 60.712(c)(1)–(5) are installed and used properly; procedures detailing the proper use of covers are posted; and the mix equipment is vented to a control device.				
(b)(8)—Demonstrate that covers meeting the requirement of § 60.712(c)(1)–(5) are installed and used properly and that procedures detailing the proper use of the covers are posted.				
C. Both coating operation and coating mix preparation equipment: (b)(9)—Determine that weighted average mass of VOC in the coating per volume of coating solids applied for each month.	(a)		(i), (j) (k)	(d)(2), (e), (g), (h), (i)

[a] Section 60.713(a) specifies the procedures to be used prior to modification/reconstruction to establish the applicability of the VOC standards in § 60.712(b)(1) and (2) for modified/reconstructed coating operations. Section 60.713(a)(1) requires the use of the procedures of § 60.713(b)(1), (2), (3), or (4) to demonstrate prior to modification/reconstruction that 90 percent of the applied VOC is recovered or destroyed. Section 60.713(a)(2) requires the use of procedures of §60.713(b)(5) to demonstrate prior to modification/reconstruction that the coating operation has a total enclosure vented to a control device that is at least 92 percent efficient. Sections 60.713(c) and (d) do not have corresponding test methods, monitoring, reporting, or recordkeeping requirements.

[b] TI = thermal incinerator; CI = catalytic incinerator; CA = carbon adsorber; CO = condenser; PE = partial enclosure; TE = total enclosure.
[c] See § 60.717(f) for additional reporting requirements when coating mix preparation equipment is constructed at a time when no coating operation is being constructed. See § 60.717(g) for addition reporting requirements when coating mix preparation equipment is constructed at the same time as an affected coating operation.

[53 FR 38914, Oct. 3, 1988; 53 FR 43799, Oct. 28, 1988, as amended at 53 FR 47955, Nov. 29, 1988; 53 FR 49822, Dec. 9, 1988]

§ 60.712 Standards for volatile organic compounds.

Each owner or operator of any affected facility that is subject to the requirements of this subpart shall comply with the emission limitations set forth in this section on and after the date on which the initial performance test required by § 60.8 is completed, but not later than 60 days after achieving the maximum production rate at which the affected facility will be operated or 180 days after initial startup, whichever date comes first.

(a) Each owner or operator shall control emissions from a new coating operation by recovering or destroying at least 93 percent of the VOC content of the coating applied at the coating applicator.

(b) Each owner or operator of a modified or reconstructed coating operation shall meet the appropriate standard set out in (b)(1), (2), or (3) of this section.

(1) For coating operations demonstrated prior to modification or reconstruction pursuant to § 60.713(a)(1) to have emissions controlled by the recovery or destruction of at least 90 percent of the VOC content of the coating applied at the coating applicator.

(i) Subject to the provisions of (b)(1)(ii) of this section, each owner or operator shall continue to control emissions from the coating operation to at least the demonstrated level or 93 percent, whichever is lower.

(ii) If the VOC control device in use during the emission reduction demonstration made pursuant to § 60.713(a)(1) is subsequently replaced, each owner or operator shall:

(A) Install a control device that is at least 95 percent efficient; and

(B) Control emissions from the coating operation to at least the level determined pursuant to § 60.713(a)(3)(ii).

(2) For coating operations demonstrated prior to modification or reconstruction pursuant to § 60.713(a)(2) to have a total enclosure installed around the coating operation and all VOC emissions ventilated to a control device that is at least 92 percent efficient.

(i) Subject to the provisions of (b)(2)(ii) of this section, each owner or operator shall continue to ventilate all VOC emissions from the total enclosure to the control device and maintain control device efficiency at or above the demonstrated level or 95 percent, whichever is lower.

(ii) If the VOC control device in use during the control device efficiency demonstration made pursuant to § 60.713(a)(2) is subsequently replaced, each owner or operator shall install a VOC control device that is at least 95 percent efficient and ventilate all VOC emissions from the total enclosure to the control device.

(3) For coating operations not subject to paragraph (b)(1) or (2) of this section, each owner or operator shall control emissions from the coating operation by recovering or destroying at least 93 percent of the VOC content of the coating applied at the coating applicator.

(c) Each owner or operator constructing new coating mix preparation equipment with concurrent construction of a new VOC control device (other than a condenser) on a magnetic tape coating operation shall control emissions from the coating mix preparation equipment by installing and using a cover on each piece of equipment and venting the equipment to a 95 percent efficient control device. Each cover shall meet the following specifications:

(1) Cover shall be closed at all times except when adding ingredients, withdrawing samples, transferring the contents, or making visual inspection when such activities cannot be carried out with cover in place. Such activities shall be carried out through ports of the minimum practical size.

(2) Cover shall extend at least 2 cm beyond the outer rim of the opening or shall be attached to the rim;

(3) Cover shall be of such design and construction that contact is maintained between cover and rim along the entire perimeter;

(4) Any breach in the cover (such as an opening for insertion of a mixer shaft or port for addition of ingredients) shall be covered consistent with (c)(2) and (3) of this section when not actively in use. An opening sufficient to allow safe clearance for a mixer shaft is acceptable during those periods when the shaft is in place; and

(5) A polyethylene or nonpermanent cover may be used provided it meets

the requirements of (c)(2), (3), and (4) of this section. Such a cover shall not be reused after once being removed.

(d) Each owner or operator of affected coating mix preparation equipment not subject to § 60.712(c) shall control emissions from the coating mix preparation equipment by either:

(1) Installing and using a cover that meets the specifications in paragraphs (c)(1)–(5) of this section and venting VOC emissions from the equipment to a VOC control device; or

(2) Installing and using a cover that meets the specifications in paragraphs (c)(1)–(5) of this section.

(e) In lieu of complying with § 60.712(a) through (d), each owner or operator may use coatings that contain a maximum of 0.20 kg of VOC per liter of coating solids as calculated on a weighted average basis for each nominal 1-month period.

§ 60.713 Compliance provisions.

(a) Applicability of § 60.712(b)(1) and (2) (standards for modified or reconstructed coating operations) and determination of control level required in § 60.712(b)(1)(ii)(B).

(1) To establish applicability of § 60.712(b)(1), each owner or operator must demonstrate, prior to modification or reconstruction, that at least 90 percent of the VOC content of the coating applied at the coating applicator is recovered or destroyed. Such demonstration shall be made using the procedures of paragraph (b)(1), (b)(2), (b)(3), or (b)(4) of this section, as appropriate.

(2) To establish applicability of § 60.712(b)(2), each owner or operator must demonstrate, prior to modification or reconstruction, that a total enclosure is installed around the existing coating operation and that all VOC emissions are ventilated to a control device that is at least 92 percent efficient. Such demonstration shall be made using the procedures of § 60.713(b)(5).

(3) To determine the level of control required in § 60.712(b)(1)(ii)(B), the owner or operator must demonstrate:

(i) That the VOC control device subsequently installed is at least 95 percent efficient. Such demonstration shall be made using Equation (2) specified in paragraph (b)(2)(iv) of this section or Equations (4) and (5) specified in paragraphs (b)(3)(iv) and (v) of this section, as applicable, and the test methods and procedures specified in § 60.715(b)–(g); and

(ii) That the overall level of control after the VOC control device is installed is at least as high as the level demonstrated prior to modification or reconstruction pursuant to paragraph (a)(1) of this section. Such demonstrations shall be made using the procedures of paragraph (b)(1), (b)(2), (b)(3), or (b)(4) of this section, as appropriate. The required overall level of control subsequent to this demonstration shall be the level so demonstrated or 93 percent, whichever is lower.

(b) Compliance demonstrations for § 60.712(a), (b)(1), (b)(2), (b)(3), (c), (d), and (e).

(1) To demonstrate compliance with § 60.712(a), (b)(1), or (b)(3) (standards for coating operations) when emissions from only the affected coating operations are controlled by a dedicated solvent recovery device, each owner or operator of the affected coating operation shall perform a liquid-liquid VOC material balance over each and every nominal 1-month period. When demonstrating compliance by this procedure, § 60.8(f) of the General Provisions does not apply. The amount of liquid VOC applied and recovered shall be determined as discussed in paragraph (b)(1)(iii) of this section. The overall VOC emission reduction (R) is calculated using the following equation:

$$R = \frac{M_r}{\sum_{i=1}^{n} \left[W_{oi} M_{ci} - RS_i \right]} \times 100$$

(Equation 1)

(i) The value of RS_i is zero unless the owner or operator submits the following information to the Administrator for approval of a measured value of RS_i that is greater than zero:

(A) Measurement techniques; and

(B) Documentation that the measured value of RS_i exceeds zero.

(ii) The measurement techniques of paragraph (b)(1)(i)(A) of this section

shall be submitted to the Administrator for approval with the notification of anticipated startup required under § 60.7(a)(2) of the General Provisions.

(iii) Each owner or operator demonstrating compliance by the test method described in paragraph (b)(1) of this section shall:

(A) Measure the amount of coating applied at the coating applicator;

(B) Determine the VOC content of all coatings applied using the test method specified in § 60.715(a);

(C) Install, calibrate, maintain, and operate, according to the manufacturer's specifications, a device that indicates the cumulative amount of VOC recovered by the solvent recovery device over each nominal 1-month period. The device shall be certified by the manufacturer to be accurate to within ±2.0 percent;

(D) Measure the amount of VOC recovered; and

(E) Calculate the overall VOC emission reduction (R) for each and every nominal 1-month period using Equation 1.

(iv) For facilities subject to § 60.712 (a) or (b)(3), compliance is demonstrated if the value of R is equal to or greater than 93 percent.

(v) Subject to the provisions of (b)(1)(vi) of this section, for facilities subject to § 60.712(b)(1), compliance is demonstrated if the value of R is equal to or greater than the percent reduction demonstrated pursuant to § 60.713(a)(1) prior to modification or reconstruction or 93 percent whichever is lower.

(vi) For facilities subject to § 60.712(b)(1)(ii), compliance is demonstrated if the value of E (control device efficiency) is greater than or equal to 0.95 and if the value of R is equal to or greater than the percent reduction demonstrated pursuant to § 60.713(a)(3) or 93 percent, whichever is lower.

(2) To demonstrate compliance with § 60.712(a), (b)(1), or (b)(3) (standards for coating operations) when the emissions from only an affected coating operation are controlled by a dedicated incinerator or when a common emission control device (other than a fixed-bed carbon adsorption system with individual exhaust stacks for each adsorber vessel) is used to control emissions from an affected coating operation as well as from other sources of VOC, each owner or operator of an affected coating operation shall perform a gaseous emission test using the following procedures:

(i) Construct the overall VOC emission reduction system so that all volumetric flow rates and total VOC emissions can be accurately determined by the applicable test methods and procedures specified in § 60.715(b) through (g);

(ii) Determine capture efficiency from the coating operation by capturing, venting, and measuring all VOC emissions from the operation. During a performance test, the owner or operator of an affected coating operation located in an area with other sources of VOC shall isolate the coating operation emissions from all other sources of VOC by one of the following methods:

(A) Build a temporary enclosure (see § 60.711(a)(16)) around the affected coating operation; or

(B) Shut down all other sources of VOC and continue to exhaust fugitive emissions from the affected coating operation through any building ventilation system and other room exhausts such as drying ovens. All ventilation air must be vented through stacks suitable for testing;

(iii) Operate the emission control device with all emission sources connected and operating;

(iv) Determine the efficiency (E) of the control device using the following equation:

$$E = \frac{\sum_{i=1}^{n} Q_{bi} C_{bi} - \sum_{j=1}^{p} Q_{aj} C_{aj}}{\sum_{i=1}^{n} Q_{bi} C_{bi}}$$

(Equation 2)

(v) Determine the efficiency (F) of the VOC capture system using the following equation:

$$F = \frac{\sum_{i=1}^{n} Q_{di}C_{di}}{\sum_{i=1}^{n} Q_{di}C_{di} + \sum_{k=1}^{p} Q_{fk}C_{fk}}$$

(Equation 3)

(vi) For each affected coating operation subject to §60.712(a) or (b)(3), compliance is demonstrated if the product of (E)×(F) is equal to or greater than 0.93.

(vii) For each affected coating operation subject to §60.712(b)(1)(i), compliance is demonstrated if the product of (E)×(F) is equal to or greater than the fractional reduction demonstrated pursuant to §60.713(a)(1) prior to modification or reconstruction or 0.93, whichever is lower.

(viii) For each affected coating operation subject to §60.712(b)(1)(ii), compliance is demonstrated if the value of E is greater than or equal to 0.95 and if the product of (E)×(F) is equal to or greater than the fractional reduction demonstrated pursuant to §60.713(a)(3) or 0.93, whichever is lower.

(3) To demonstrate compliance with §60.712(a), (b)(1), or (b)(3) (standards for coating operations) when a fixed-bed carbon adsorption system with individual exhaust stacks for each adsorber vessel is used to control emissions from an affected coating operation as well as from other sources of VOC, each owner or operator of an affected coating operation shall perform a gaseous emission test using the following procedures:

(i) Construct the overall VOC emission reduction system so that each volumetric flow rate and the total VOC emissions can be accurately determined by the applicable test methods and procedures specified in §60.715(b) through (g);

(ii) Assure that all VOC emissions from the coating operation are segregated from other VOC sources and that the emissions can be captured for measurement, as described in §60.713(b)(2)(ii)(A) and (B);

(iii) Operate the emission control device with all emission sources connected and operating;

(iv) Determine the efficiency (H_v) of each individual adsorber vessel (v) using the following equation:

$$H_v = \frac{Q_{gv}C_{gv} - Q_{hv}C_{hv}}{Q_{gv}C_{gv}}$$

(Equation 4)

(v) Determine the efficiency of the carbon adsorption system (H_{sys}) by computing the average efficiency of the adsorber vessels as weighted by the volumetric flow rate (Q_{hv}) of each individual adsorber vessel (v) using the following equation:

$$H_{sys} = \frac{\sum_{v=1}^{g} H_v Q_{hv}}{\sum_{v=1}^{g} Q_{hv}}$$

(Equation 5)

(vi) Determine the efficiency (F) of the VOC capture system using Equation (3).

(vii) For the affected coating operation subject to §60.712(a) or (b)(3), compliance is demonstrated if the product of (H_{sys})×(F) is equal to or greater than 0.93.

(viii) For the affected coating operation subject to §60.712(b)(1)(i), compliance is demonstrated if the product of (H_{sys})×(F) is equal to or greater than the fractional reduction demonstrated pursuant to §60.713(a)(1) prior to modification or reconstruction or 0.93, whichever is lower.

(ix) For each affected coating operation subject to §60.712(b)(1)(ii), compliance is demonstrated if the value of H_{sys} is greater than or equal to 0.95 and if the product of (H_{sys})×(F) is equal to or greater than the fractional reduction demonstrated pursuant to §60.713(a)(3) or 0.93, whichever is lower.

(4) To demonstrate compliance with §60.712(a), (b)(1), or (b)(3) (standards for coating operations) when the VOC emissions from more than one affected coating operation are collected by a common capture system and are vented through a common duct to a control

device that is also controlling emissions from nonaffected sources and the emissions from the nonaffected sources are vented separately from the affected coating operations, the owner or operator may:

(i) Consider the combined affected coating operations as a single emission source; and

(ii) Conduct a compliance test on this single source by the methods described in § 60.713(b)(2) or (3), as applicable.

(5) An alternative method of demonstrating compliance with § 60.712(a) or (b)(3) (standards for coating operations) and the sole method of demonstrating compliance with § 60.712(b)(2) (standards for modified or reconstructed coating operations) is the installation of a total enclosure around the coating operation and the ventilation of all VOC emissions from the total enclosure to a control device with the efficiency specified in paragraph (b)(5)(iii)(A) or (B) of this section, as applicable. If this method is selected, the compliance test methods described in paragraphs (b)(1), (b)(2), (b)(3), and (b)(4) of this section are not required. Instead, each owner or operator of an affected coating operation shall:

(i) Demonstrate that a total enclosure is installed. An enclosure that meets the requirements in paragraphs (b)(5)(i)(A) through (D) of this section shall be assumed to be a total enclosure. The owner or operator of an enclosed coating operation that does not meet the requirements may apply to the Administrator for approval of the enclosure as a total enclosure on a case-by-case basis. The enclosure shall be considered a total enclosure if it is demonstrated to the satisfaction of the Administrator that all VOC emissions from the affected coating operation are contained and vented to the control device. The requirements for automatic approval are as follows:

(A) Total area of all natural draft openings shall not exceed 5 percent of the total surface area of the total enclosure's walls, floor, and ceiling;

(B) All sources of emissions within the enclosure shall be a minimum of four equivalent diameters away from each natural draft opening;

(C) Average inward face velocity across all natural draft openings (FV) shall be a minimum of 3,600 meters per hour as determined by the following procedures:

(*1*) Construct all forced makeup air ducts and all exhaust ducts so that the volumetric flow rate in each can be accurately determined by the test methods and procedures specified in § 60.715(c) and (d). Volumetric flow rates shall be calculated without the adjustment normally made for moisture content; and

(*2*) Determine FV by the following equation:

$$FV = \frac{\sum_{j=1}^{n} Q_{out\ j} - \sum_{i=1}^{p} Q_{in\ i}}{\sum_{k=1}^{q} A_k}$$

(Equation 6)

(D) The air passing through all natural draft openings shall flow into the enclosure continuously. If FV is less than or equal to 9,000 meters per hour, the continuous inward flow of air shall be verified by continuous observation using smoke tubes, streamers, tracer gases, or other means approved by the Administrator over the period that the volumetric flow rate tests required to determine FV are carried out. If FV is greater than 9,000 meters per hour, the direction of airflow through the natural draft openings shall be presumed to be inward at all times without verification.

(ii) Determine the control device efficiency using Equation (2) or Equations (4) and (5), as applicable, and the test methods and procedures specified in § 60.715(b) through (g).

(iii) Compliance is demonstrated if the installation of a total enclosure is demonstrated and the value of E determined from Equation (2) (or the value of H_{sys} determined from Equations (4) and (5), as applicable) is equal to or greater than the required efficiency as specified below:

(A) For coating operations subject to the standards of § 60.712(a), (b)(2)(ii), and (b)(3), 0.95 (95 percent); or

(B) For coating operations subject to the standards of §60.712(b)(2)(i), the value of E determined from Equation (2) (or the value of H_{sys} determined from Equations (4) and (5), as applicable) pursuant to §60.713(a)(2) prior to modification or reconstruction or 0.95 (95 percent), whichever is lower.

(6) To demonstrate compliance with §60.712(c) (standard for new mix equipment with concurrent construction of a control device), each owner or operator of affected coating mix preparation equipment shall demonstrate upon inspection that:

(i) Covers satisfying the requirements of §60.712(c)(1)–(5) have been installed and are being used properly;

(ii) Procedures detailing the proper use of covers, as specified in §60.712(c)(1), have been posted in all areas where affected coating mix preparation equipment is used;

(iii) The coating mix preparation equipment is vented to a control device; and

(iv) The control device efficiency (E or H_{sys}, as applicable) determined using Equation (2) or Equations (4) and (5), respectively, and the test methods and procedures specified in §60.715(b)–(g) is equal to or greater than 0.95.

(7) To demonstrate compliance with §60.712(d)(1) (standard for mix equipment), each owner or operator of affected coating mix preparation equipment shall demonstrate upon inspection that:

(i) Covers satisfying the requirements of §60.712(c)(1)–(5) have been installed and are being used properly;

(ii) Procedures detailing the proper use of covers, as specified in §60.712(c)(1), have been posted in all areas where affected coating mix preparation equipment is used; and

(iii) The coating mix preparation equipment is vented to a control device.

(8) To demonstrate compliance with §60.712(d)(2) (standard for mix equipment), each owner or operator of affected coating mix preparation equipment shall demonstrate upon inspection that both:

(i) Covers satisfying the requirements of §60.712(c)(1)–(5) have been installed and are being used properly; and

(ii) Procedures detailing the proper use of covers, as specified in §60.712(c)(1), have been posted in all areas where affected coating mix preparation equipment is used.

(9) To determine compliance with §60.712(e) (high-solids coatings alternative standard), each owner or operator of an affected facility shall determine the weighted average mass of VOC contained in the coating per volume of coating solids applied for each and every nominal 1-month period according to the following procedures:

(i) Determine the weight fraction of VOC in each coating applied using Method 24 as specified in §60.715(a);

(ii) Determine the volume of coating solids in each coating applied from the facility records; and

(iii) Compute the weighted average by the following equation:

$$G = \frac{\sum_{i=1}^{n} W_{oi} M_{ci}}{\sum_{i=1}^{n} L_{si} V_{ci}}$$

(Equation 7)

(iv) For each affected facility where the value of G is less than or equal to 0.20 kilogram of VOC per liter of coating solids applied, the facility is in compliance.

(c) Startups and shutdowns are normal operation for this source category. Emissions from these operations are to be included when determining if the standards for coating operations specified in §60.712(a) and (b) are being attained.

(d) If a control device other than a carbon adsorber, condenser, or incinerator is used to control emissions from an affected facility, the necessary operating specifications for that device must be obtained from the Administrator. An example of such a device is a flare.

[53 FR 38914, Oct. 3, 1988; 53 FR 43799, Oct. 28, 1988, as amended at 53 FR 47955, Nov. 29, 1988]

§ 60.714 Installation of monitoring devices and recordkeeping.

All monitoring devices required under the provisions of this section shall be installed and calibrated, according to the manufacturer's specifications, prior to the initial performance tests in locations such that representative values of the monitored parameters will be obtained. The parameters to be monitored shall be continuously measured and recorded during all performance tests.

(a) Each owner or operator of an affected coating operation that utilizes less solvent annually than the applicable cutoff provided in § 60.710(b) and that is not subject to § 60.712 (standards for coating operations) shall maintain records of actual solvent use.

(b) Each owner or operator of an affected coating operation demonstrating compliance by the test method described in § 60.713(b)(1) (liquid material balance) shall maintain records of all the following for each and every nominal 1-month period:

(1) Amount of coating applied at the applicator;

(2) Results of the reference test method specified in § 60.715(a) for determining the VOC content of all coatings applied;

(3) Amount VOC recovered; and

(4) Calculation of the percent VOC recovered.

(c) Each owner or operator of an affected coating operation or affected coating mix preparation equipment controlled by a carbon adsorption system and demonstrating compliance by the procedures described in § 60.713(b)(2), (3), (4), (5), or (6) (which include control device efficiency determinations) shall carry out the monitoring and recordkeeping provisions of paragraph (c)(1) or (2) of this section, as appropriate.

(1) For carbon adsorption systems with a common exhaust stack for all the individual adsorber vessels, install, calibrate, maintain, and operate, according to the manufacturer's specifications, a monitoring device that continuously indicates and records the concentration level of organic compounds in either the control device outlet gas stream or in both the control device inlet and outlet gas streams. The outlet gas stream would be monitored if the percent increase in the concentration level of organic compounds is used as the basis for reporting, as described in § 60.717(d)(3). The inlet and outlet gas streams would be monitored if the percent control device efficiency is used as the basis for reporting, as described in § 60.717(d)(4).

(2) For carbon adsorption systems with individual exhaust stacks for each adsorber vessel, install, calibrate, maintain, and operate, according to the manufacturer's specifications, a monitoring device that continuously indicates and records the concentration level of organic compounds in the outlet gas stream for a minimum of one complete adsorption cycle per day for each adsorber vessel. The owner or operator may also monitor and record the concentration level of organic compounds in the common carbon adsorption system inlet gas stream or in each individual carbon adsorber vessel inlet stream. The outlet gas streams alone would be monitored if the percent increase in the concentration level of organic compounds is used as the basis for reporting, as described in § 60.717(d)(3). In this case, the owner or operator shall compute daily a 3-day rolling average concentration level of organics in the outlet gas stream from each individual adsorber vessel. The inlet and outlet gas streams would be monitored if the percent control device efficiency is used as the basis for reporting, as described in § 60.717(d)(4). In this case, the owner or operator shall compute daily a 3-day rolling average efficiency for each individual adsorber vessel.

(d) Each owner or operator of an affected coating operation controlled by a condensation system and demonstrating compliance by the procedures described in § 60.713(b)(2), (4), or (5) (which include control device efficiency determinations) shall install, calibrate, maintain, and operate, according to the manufacturer's specifications, a monitoring device that continuously indicates and records the temperature of the condenser exhaust stream.

(e) Each owner or operator of an affected coating operation or affected coating mix preparation equipment

controlled by a thermal incinerator and demonstrating compliance by the procedures described in §60.713(b)(2), (4), (5), or (6) (which include control device efficiency determinations) shall install, calibrate, maintain, and operate, according to the manufacturer's specifications, a monitoring device that continuously indicates and records the combustion temperature of the incinerator. The monitoring device shall have an accuracy within ±1 percent of the temperature being measured in Celsius degrees.

(f) Each owner or operator of an affected coating operation or affected coating mix preparation equipment controlled by a catalytic incinerator and demonstrating compliance by the procedures described in §60.713(b)(2), (4), (5), or (6) (which include control device efficiency determinations) shall install, calibrate, maintain, and operate, according to the manufacturer's specifications, a monitoring device that continuously indicates and records the gas temperature both upstream and downstream of the catalyst bed. The monitoring device shall have an accuracy within ±1 percent of the temperature being measured in Celsius degrees.

(g) Each owner or operator of an affected coating operation demonstrating compliance pursuant to §60.713(b)(2), (3), or (4) (which include VOC capture system efficiency determinations) shall submit a monitoring plan for the VOC capture system to the Administrator for approval along with the notification of anticipated startup required under §60.7(a)(2) of the General Provisions. This plan shall identify the parameter to be monitored as an indicator of VOC capture system performance (e.g., the amperage to the exhaust fans or duct flow rates) and the method for monitoring the chosen parameter. The owner or operator shall install, calibrate, maintain, and operate, according to the manufacturer's specifications, a monitoring device that continuously indicates and records the value of the chosen parameter.

(h) Each owner or operator of an affected coating operation who uses the equipment alternative described in §60.713(b)(5) to demonstrate compliance shall follow the procedures described in paragraph (g) of this section to establish a monitoring plan for the total enclosure.

(i) Each owner or operator of an affected coating operation shall record time periods of coating operations when an emission control device is not in use.

(j) Each owner or operator of an affected coating operation or affected coating mix preparation equipment complying with §60.712(e) shall maintain records of the monthly weighted average mass of VOC contained in the coating per volume of coating solids applied for each coating, as described in §60.713(b)(9)(i) through (iv).

(k) Records of the measurements and calculations required in §§60.713 and 60.714 must be retained for at least 2 years following the date of the measurements and calculations.

(Sec. 114 of the Clean Air Act as amended (42 U.S.C. 7414))

[53 FR 38914, Oct. 3, 1988, as amended at 64 FR 7467, Feb. 12, 1999]

§60.715 Test methods and procedures.

Methods in appendix A of this part, except as provided under §60.8(b), shall be used to determine compliance as follows:

(a) Method 24 is used to determine the VOC content in coatings. If it is demonstrated to the satisfaction of the Administrator that plant coating formulation data are equivalent to Method 24 results, formulation data may be used. In the event of any inconsistency between a Method 24 test and a facility's formulation data, the Method 24 test will govern. For Method 24, the coating sample must be a 1-liter sample taken into a 1-liter container at a location and time such that the sample will be representative of the coating applied to the base film (i.e., the sample shall include any dilution solvent or other VOC added during the manufacturing process). The container must be tightly sealed immediately after the sample is taken. Any solvent or other VOC added after the sample is taken must be measured and accounted for in the calculations that use Method 24 results.

(b) Method 18, 25, or 25A, as appropriate to the conditions at the site, is

used to determine VOC concentration. The owner or operator shall submit notice of the intended test method to the Administrator for approval along with the notification of the performance test required under §60.8(d) of the General Provisions. Method selection shall be based on consideration of the diversity of organic species present and their total concentration and on consideration of the potential presence of interfering gases. Except as indicated in paragraphs (b)(1) and (2) of this section, the test shall consist of three separate runs, each lasting a minimum of 30 minutes.

(1) When the method is to be used in the determination of the efficiency of a fixed-bed carbon adsorption system with a common exhaust stack for all the individual adsorber vessels pursuant to §60.713(b)(2), (4), (5), or (6), the test shall consist of three separate runs, each coinciding with one or more complete sequences through the adsorption cycles of all the individual adsorber vessels.

(2) When the method is to be used in the determination of the efficiency of a fixed-bed carbon adsorption system with individual exhaust stacks for each adsorber vessel pursuant to §60.713(b)(3), (4), (5), or (6), each adsorber vessel shall be tested individually. The test for each adsorber vessel shall consist of three separate runs. Each run shall coincide with one or more complete adsorption cycles.

(c) Method 1 or 1A is used for sample and velocity traverses.

(d) Method 2, 2A, 2C, or 2D is used for velocity and volumetric flow rates.

(e) Method 3 is used for gas analysis.

(f) Method 4 is used for stack gas moisture.

(g) Methods 2, 2A, 2C, 2D, 3, and 4 shall be performed, as applicable, at least twice during each test period.

[53 FR 38914, Oct. 3, 1988; 53 FR 43799, Oct. 28, 1988]

§60.716 Permission to use alternative means of emission limitation.

(a) If, in the Administrator's judgment, an alternative means of emission limitation will achieve a reduction in emissions of VOC from any emission point subject to §60.712(c) or (d) (standards for mix equipment) at least equivalent to that required by §60.712 (c) or (d), respectively, the Administrator will publish in the FEDERAL REGISTER a notice permitting the use of the alternative means. The notice may condition permission on requirements related to the operation and maintenance of the alternative means.

(b) Any notice under paragraph (a) of this section shall be published only after public notice and an opportunity for a public hearing.

(c) Any person seeking permission under this section shall submit either results from an emission test that documents the collection and measurement of all VOC emissions from a given control device or an engineering evaluation that documents the determination of such emissions.

§60.717 Reporting and monitoring requirements.

(a) For all affected coating operations subject to §60.712(a), (b)(1), (b)(2), or (b)(3) and all affected coating mix preparation equipment subject to §60.712(c), the performance test data and results shall be submitted to the Administrator as specified in §60.8(a) of the General Provisions (40 CFR part 60, subpart A). In addition, the average values of the monitored parameters measured at least every 15 minutes and averaged over the period of the performance test shall be submitted with the results of all performance tests.

(b) Each owner or operator of an affected coating operation claiming to utilize less than the applicable volume of solvent specified in §60.710(b) in the first calendar year of operation shall submit to the Administrator, with the notification of projected startup, a material flow chart indicating projected solvent use. The owner or operator shall also submit actual solvent use records at the end of the initial calendar year.

(c) Each owner or operator of an affected coating operation initially utilizing less than the applicable volume of solvent specified in §60.710(b) per calendar year shall report the first calendar year in which actual annual solvent use exceeds the applicable volume.

(d) Each owner or operator of an affected coating operation, or affected

coating mix preparation equipment subject to §60.712(c), shall submit semiannual reports to the Administrator documenting the following:

(1) The 1-month amount of VOC contained in the coating, the VOC recovered, and the percent emission reduction for months of noncompliance for any affected coating operation demonstrating compliance by the performance test method described in §60.713(b)(1) (liquid material balance);

(2) The VOC contained in the coatings for the manufacture of magnetic tape for any 1-month period during which the weighted average solvent content (G) of the coatings exceeded 0.20 kilogram per liter of coating solids for those affected facilities complying with §60.712(e) (high-solids coatings alternative standard);

(3) For those affected facilities monitoring only the carbon adsorption system outlet concentration levels of organic compounds, the periods (during actual coating operations) specified in paragraph (d)(3)(i) or (ii) of this section, as applicable.

(i) For carbon adsorption systems with a common exhaust stack for all the individual adsorber vessels, all periods of three consecutive adsorption cycles of all the individual adsorber vessels during which the average value of the concentration level of organic compounds in the common outlet gas stream is more than 20 percent greater than the average value measured during the most recent performance test that demonstrated compliance.

(ii) For carbon adsorption systems with individual exhaust stacks for each adsorber vessel, all 3-day rolling averages for each adsorber vessel when the concentration level of organic compounds in the individual outlet gas stream is more than 20 percent greater than the average value for that adsorber vessel measured during the most recent performance test that demonstrated compliance.

(4) For those affected facilities monitoring both the carbon adsorption system inlet and outlet concentration levels of organic compounds, the periods (during actual coating operations), specified in (d)(4)(i) or (ii) of this section, as applicable.

(i) For carbon adsorption systems with a common exhaust stack for all the individual adsorber vessels, all periods of three consecutive adsorption cycles of all the individual adsorber vessels during which the average carbon adsorption system efficiency falls below the applicable level as follows:

(A) For those affected facilities demonstrating compliance by the performance test method described in §60.713(b)(2) or (4), the value of E determined using Equation (2) during the most recent performance test that demonstrated compliance.

(B) For those affected facilities demonstrating compliance pursuant to §60.713(b)(5)(iii)(A) or §60.713(b)(6), 0.95 (95 percent).

(C) For those affected facilities demonstrating compliance pursuant to §60.713(b)(5)(iii)(B), the required value of E determined using Equation (2) pursuant to §60.713(a)(2) prior to modification or reconstruction or 0.95 (95 percent), whichever is lower.

(ii) For carbon adsorption systems with individual exhaust stacks for each adsorber vessel, all 3-day rolling averages for each adsorber vessel when the efficiency falls below the applicable level as follows:

(A) For those affected facilities demonstrating compliance by the performance test method described in §60.713(b)(3) or (4), the value of H_v determined using Equation (4) during the most recent performance test that demonstrated compliance.

(B) For those affected facilities demonstrating compliance pursuant to §60.713(b)(5)(iii)(A) or §60.713(b)(6), 0.95 (95 percent).

(C) For those affected facilities demonstrating compliance pursuant to §60.713(b)(5)(iii)(B), the value of H_v determined using Equation 4 pursuant to §60.713(a)(2) prior to modification or reconstruction.

(5) All 3-hour periods (during actual coating operations) during which the average exhaust temperature is 5 or more Celsius degrees above the average temperature measured during the most recent performance test that demonstrated compliance for those affected facilities monitoring condenser exhaust gas temperature;

(6) All 3-hour periods (during actual coating operations) during which the average combustion temperature is more than 28 Celsius degrees below the average combustion temperature during the most recent performance test that demonstrated compliance for those affected facilities monitoring thermal incinerator combustion gas temperature;

(7) All 3-hour periods (during actual coating operations) during which the average gas temperature immediately before the catalyst bed is more than 28 Celsius degrees below the average gas temperature during the most recent performance test that demonstrated compliance and all 3-hour periods (during actual coating operations) during which the average gas temperature difference across the catalyst bed is less than 80 percent of the average gas temperature difference during the most recent performance test that demonstrated compliance for those affected facilities monitoring catalytic incinerator catalyst bed temperature; and

(8) All 3-hour periods (during actual coating operations) during which the average total enclosure or VOC capture system monitoring device readings vary by 5 percent or more from the average value measured during the most recent performance test that demonstrated compliance for those affected facilities monitoring a total enclosure pursuant to §60.714(h) or VOC capture system pursuant to §60.714(g).

(e) Each owner or operator of an affected coating operation, or affected coating mix preparation equipment subject to §60.712(c), not required to submit reports under §60.717(d) because no reportable periods have occurred shall submit semiannual reports so affirming.

(f) Each owner or operator of affected coating mix preparation equipment that is constructed at a time when no affected coating operation is being constructed shall:

(1) Be exempt from the reporting requirements specified in §60.7(a)(1), (2), and (4); and

(2) Submit the notification of actual startup specified in §60.7(a)(3).

(g) The owner or operator of affected coating mix preparation equipment that is constructed at the same time as an affected coating operation shall include the affected coating mix preparation equipment in all the reporting requirements for the affected coating operation specified in §60.7(a)(1) through (4).

(h) The reports required under paragraphs (b) through (e) of this section shall be postmarked within 30 days of the end of the reporting period.

(i) The requirements of this subsection remain in force until and unless EPA, in delegating enforcement authority to a State under section 111(c) of the Act, approves reporting requirements or an alternative means of compliance surveillance adopted by such States. In this event, affected sources within the State will be relieved of the obligation to comply with this subsection, provided that they comply with the requirements established by the State.

(Sec. 114 of the Clean Air Act as amended (42 U.S.C. 7414))

[53 FR 38914, Oct. 3, 1988; 53 FR 43799, Oct. 28, 1988, as amended at 53 FR 47955, Nov. 29, 1988; 64 FR 7467, Feb. 12, 1999]

§60.718 Delegation of authority.

(a) In delegating implementation and enforcement authority to a State under section 111(c) of the Act, the authorities contained in paragraph (b) of this section shall be retained by the Administrator and not transferred to a State.

(b) Authorities which will not be delegated to States:

§60.711(a)(16)
§60.713(b)(1)(i)
§60.713(b)(1)(ii)
§60.713(b)(5)(i)
§60.713(d)
§60.715(a)
§60.716

[53 FR 38914, Oct. 3, 1988; 53 FR 47955, Nov. 29, 1988]

Subpart TTT—Standards of Performance for Industrial Surface Coating: Surface Coating of Plastic Parts for Business Machines

SOURCE: 53 FR 2676, Jan. 29, 1988, unless otherwise noted.

§ 60.720 Applicability and designation of affected facility.

(a) The provisions of this subpart apply to each spray booth in which plastic parts for use in the manufacture of business machines receive prime coats, color coats, texture coats, or touch-up coats.

(b) This subpart applies to any affected facility for which construction, modification, or reconstruction begins after January 8, 1986.

§ 60.721 Definitions.

(a) As used in this subpart, all terms not defined herein shall have the meaning given them in the Act or in subpart A of this part.

Business machine means a device that uses electronic or mechanical methods to process information, perform calculations, print or copy information, or convert sound into electrical impulses for transmission, such as:

(1) Products classified as typewriters under SIC Code 3572;

(2) Products classified as electronic computing devices under SIC Code 3573;

(3) Products classified as calculating and accounting machines under SIC Code 3574;

(4) Products classified as telephone and telegraph equipment under SIC Code 3661;

(5) Products classified as office machines, not elsewhere classified, under SIC Code 3579; and

(6) Photocopy machines, a subcategory of products classified as photographic equipment under SIC code 3861.

Coating operation means the use of a spray booth for the application of a single type of coating (e.g., prime coat); the use of the same spray booth for the application of another type of coating (e.g., texture coat) constitutes a separate coating operation for which compliance determinations are performed separately.

Coating solids applied means the coating solids that adhere to the surface of the plastic business machine part being coated.

Color coat means the coat applied to a part that affects the color and gloss of the part, not including the prime coat or texture coat. This definition includes fog coating, but does not include conductive sensitizers or electromagnetic interference/radio frequency interference shielding coatings.

Conductive sensitizer means a coating applied to a plastic substrate to render it conductive for purposes of electrostatic application of subsequent prime, color, texture, or touch-up coats.

Electromagnetic interference/radio frequency interference (EMI/RFI) shielding coating means a conductive coating that is applied to a plastic substrate to attenuate EMI/RFI signals.

Fog coating (also known as mist coating and uniforming) means a thin coating applied to plastic parts that have molded-in color or texture or both to improve color uniformity.

Nominal 1-month period means either a calendar month, 30-day month, accounting month, or similar monthly time period that is established prior to the performance test (i.e., in a statement submitted with notification of anticipated actual startup pursuant to 40 CFR 60.7(2)).

Plastic parts means panels, housings, bases, covers, and other business machine components formed of synthetic polymers.

Prime coat means the initial coat applied to a part when more than one coating is applied, not including conductive sensitizers or electromagnetic interference/radio frequency interference shielding coatings.

Spray booth means the structure housing automatic or manual spray application equipment where a coating is applied to plastic parts for business machines.

Texture coat means the rough coat that is characterized by discrete, raised spots on the exterior surface of the part. This definition does not include conductive sensitizers or EMI/RFI shielding coatings.

Touch-up coat means the coat applied to correct any imperfections in the finish after color or texture coats have been applied. This definition does not include conductive sensitizers or EMI/RFI shielding coatings.

Transfer efficiency means the ratio of the amount of coating solids deposited onto the surface of a plastic business machine part to the total amount of coating solids used.

VOC emissions means the mass of VOC's emitted from the surface coating of plastic parts for business machines expressed as kilograms of VOC's per liter of coating solids applied (i.e., deposited on the surface).

(b) All symbols used in this subpart not defined below are given meaning in the Act or subpart A of this part.

D_c=density of each coating as received (kilograms per liter)
D_d=density of each diluent VOC (kilograms per liter)
L_c=the volume of each coating consumed, as received (liters)
L_d=the volume of each diluent VOC added to coatings (liters)
L_s=the volume of coating solids consumed (liters)
M_d=the mass of diluent VOC's consumed (kilograms)
M_o=the mass of VOC's in coatings consumed, as received (kilograms)
N=the volume-weighted average mass of VOC emissions to the atmosphere per unit volume of coating solids applied (kilograms per liter)
T=the transfer efficiency for each type of application equipment used at a coating operation (fraction)
T_{avg}=the volume-weighted average transfer efficiency for a coating operation (fraction)
V_s=the proportion of solids in each coating, as received (fraction by volume)
W_o=the proportion of VOC's in each coating, as received (fraction by weight)

[53 FR 2676, Jan. 29, 1988, as amended at 54 FR 25459, June 15, 1989]

§ 60.722 Standards for volatile organic compounds.

(a) Each owner or operator of any affected facility which is subject to the requirements of this subpart shall comply with the emission limitations set forth in this section on and after the date on which the initial performance test, required by §§ 60.8 and 60.723 is completed, but not later than 60 days after achieving the maximum production rate at which the affected facility will be operated, or 180 days after the initial startup, whichever date comes first. No affected facility shall cause the discharge into the atmosphere in excess of:

(1) 1.5 kilograms of VOC's per liter of coating solids applied from prime coating of plastic parts for business machines.

(2) 1.5 kilograms of VOC's per liter of coating solids applied from color coating of plastic parts for business machines.

(3) 2.3 kilograms of VOC's per liter of coating solids applied from texture coating of plastic parts for business machines.

(4) 2.3 kilograms of VOC's per liter of coatings solids applied from touch-up coating of plastic parts for business machines.

(b) All VOC emissions that are caused by coatings applied in each affected facility, regardless of the actual point of discharge of emissions into the atmosphere, shall be included in determining compliance with the emission limits in paragraph (a) of this section.

§ 60.723 Performance tests and compliance provisions.

(a) Section 60.8 (d) and (f) do not apply to the performance test procedures required by this section.

(b) The owner or operator of an affected facility shall conduct an initial performance test as required under § 60.8(a) and thereafter a performance test each nominal 1-month period for each affected facility according to the procedures in this section.

(1) The owner or operator shall determine the composition of coatings by analysis of each coating, as received, using Reference Method 24, from data that have been determined by the coating manufacturer using Reference Method 24, or by other methods approved by the Administrator.

(2) The owner or operator shall determine the volume of coating and the mass of VOC used for dilution of coatings from company records during each nominal 1-month period. If a common coating distribution system serves more than one affected facility or serves both affected and nonaffected spray booths, the owner or operator shall estimate the volume of coatings used at each facility by using procedures approved by the Administrator.

(i) The owner or operator shall calculate the volume-weighted average mass of VOC's in coatings emitted per unit volume of coating solids applied (N) at each coating operation [i.e., for each type of coating (prime, color, texture, and touch-up) used] during each

nominal 1-month period for each affected facility. Each 1-month calculation is considered a performance test. Except as provided in paragraph (b)(2)(iii) of this section, N will be determined by the following procedures:

(A) Calculate the mass of VOC's used (M_o+M_d) for each coating operation during each nominal 1-month period for each affected facility by the following equation:

$$M_o + M_d = \sum_{i=1}^{n} L_{ci} D_{ci} W_{oi} + \sum_{j=1}^{m} L_{dj} D_{dj}$$

where n is the number of coatings of each type used during each nominal 1-month period and m is the number of different diluent VOC's used during each nominal 1-month period. ($\Sigma L_{dj} D_{dj}$ will be 0 if no VOC's are added to the coatings, as received.)

(B) Calculate the total volume of coating solids consumed (L_s) in each nominal 1-month period for each coating operation for each affected facility by the following equation:

$$L_s = \sum_{i=1}^{n} L_{ci} V_{si}$$

where n is the number of coatings of each type used during each nominal 1-month period.

(C) Select the appropriate transfer efficiency (T) from Table 1 for each type of coating applications equipment used at each coating operation. If the owner or operator can demonstrate to the satisfaction of the Administrator that transfer efficiencies other than those shown are appropriate, the Administrator will approve their use on a case-by-case basis. Transfer efficiency values for application methods not listed below shall be approved by the Administrator on a case-by-case basis. An owner or operator must submit sufficient data for the Administrator to judge the validity of the transfer efficiency claims.

(D) Where more than one application method is used within a single coating operation, the owner or operator shall determine the volume of each coating applied by each method through a means acceptable to the Administrator and compute the volume-weighted average transfer efficiency by the following equation:

$$T_{avg} = \frac{\sum_{i=1}^{n} \sum_{k=1}^{p} L_{cik} V_{sik} T_k}{L_s}$$

TABLE 1—TRANSFER EFFICIENCIES

Application methods	Transfer efficiency	Type of coating
Air atomized spray	0.25	Prime, color, texture, touch-up, and fog coats.
Air-assistd airless spray.	.40	Prime and color coats.
Electrostatic air spray	.40	Do.

where n is the number of coatings of each type used and p is the number of application methods used.

(E) Calculate the volume-weighted average mass of VOC's emitted per unit volume of coating solids applied (N) during each nominal 1-month period for each coating operation for each affected facility by the folowing equation:

$$N = \frac{M_o + M_d}{L_s T_{avg}}$$

(T_{avg}=T when only one type of coating operation occurs).

(ii) Where the volume-weighted average mass of VOC's emitted to the atmosphere per unit volume of coating solids applied (N) is less than or equal to 1.5 kilograms per liter for prime coats, is less than or equal to 1.5 kilograms per liter for color coats, is less than or equal to 2.3 kilograms per liter for texture coats, and is less than or equal to 2.3 kilograms per liter for touch-up coats, the affected facility is in compliance.

(iii) If each individual coating used by an affected facility has a VOC content (kg VOC/l of solids), as received, which when divided by the lowest transfer efficiency at which the coating is applied for each coating operation results in a value equal to or less than 1.5 kilograms per liter for prime and color coats and equal to or less than 2.3 kilograms per liter for texture and touch-up coats, the affected facility is in compliance provided that no VOC's are added to the coatings during distribution or application.

(iv) If an affected facility uses add-on controls to control VOC emissions and if the owner or operator can demonstrate to the Administrator that the volume-weighted average mass of VOC's emitted to the atmosphere during each nominal 1-month period per unit volume of coating solids applied (N) is within each of the applicable limits expressed in paragraph (b)(2)(ii) of this section because of this equipment, the affected facility is in compliance. In such cases, compliance will be determined by the Administrator or a case-by-case basis.

§ 60.724 Reporting and recordkeeping requirements.

(a) The reporting requirements of § 60.8(a) apply only to the initial performance test. Each owner or operator subject to the provisions of this subpart shall include the following data in the report of the initial performance test required under § 60.8(a):

(1) Except as provided for in paragraph (a)(2) of this section, the volume-weighted average mass of VOC's emitted to the atmosphere per volume of applied coating solids (N) for the initial nominal 1-month period for each coating operation from each affected facility.

(2) For each affected facility where compliance is determined under the provisions of § 60.723(b)(2)(iii), a list of the coatings used during the initial nominal 1-month period, the VOC content of each coating calculated from data determined using Reference Method 24, and the lowest transfer efficiency at which each coating is applied during the initial nominal 1-month period.

(b) Following the initial report, each owner or operator shall:

(1) Report the volume-weighted average mass of VOC's per unit volume of coating solids applied for each coating operation for each affected facility during each nominal 1-month period in which the facility is not in compliance with the applicable emission limits specified in § 60.722. Reports of noncompliance shall be submitted on a quarterly basis, occurring every 3 months following the initial report; and

(2) Submit statements that each affected facility has been in compliance with the applicable emission limits specified in § 60.722 during each nominal 1-month period. Statements of compliance shall be submitted on a semiannual basis.

(c) These reports shall be postmarked not later than 10 days after the end of

the periods specified in § 60.724(b)(1) and § 60.724(b)(2).

(d) Each owner or operator subject to the provisions of this subpart shall maintain at the source, for a period of at least 2 years, records of all data and calculations used to determine monthly VOC emissions from each coating operation for each affected facility as specified in 40 CFR 60.7(d).

(e) Reporting and recordkeeping requirements for facilities using add-on controls will be determined by the Administrator on a case-by-case basis.

§ 60.725 Test methods and procedures.

(a) The reference methods in appendix A to this part except as provided under § 60.8(b) shall be used to determine compliance with § 60.722 as follows:

(1) Method 24 for determination of VOC content of each coating as received.

(2) For Method 24, the sample must be at least a 1-liter sample in a 1-liter container.

(b) Other methods may be used to determine the VOC content of each coating if approved by the Administrator before testing.

§ 60.726 Delegation of authority.

(a) In delegating implementation and enforcement authority to a State under section 111(c) of the Act, the authorities contained in paragraph (b) of this section shall be retained by the Administrator and not transferred to a State.

(b) Authorities which will not be delegated to the States:

Section 60.723(b)(1)
Section 60.723(b)(2)(i)(C)
Section 60.723(b)(2)(iv)
Section 60.724(e)
Section 60.725(b)

[53 FR 2676, Jan. 29, 1988, as amended at 53 FR 19300, May 27, 1988]

Subpart UUU—Standards of Performance for Calciners and Dryers in Mineral Industries

SOURCE: 57 FR 44503, Sept. 28, 1992, unless otherwise noted.

§ 60.730 Applicability and designation of affected facility.

(a) The affected facility to which the provisions of this subpart apply is each calciner and dryer at a mineral processing plant. Feed and product conveyors are not considered part of the affected facility. For the brick and related clay products industry, only the calcining and drying of raw materials prior to firing of the brick are covered.

(b) An affected facility that is subject to the provisions of subpart LL, Metallic Mineral Processing Plants, is not subject to the provisions of this subpart. Also, the following processes and process units used at mineral processing plants are not subject to the provisions of this subpart: vertical shaft kilns in the magnesium compounds industry; the chlorination-oxidation process in the titanium dioxide industry; coating kilns, mixers, and aerators in the roofing granules industry; and tunnel kilns, tunnel dryers, apron dryers, and grinding equipment that also dries the process material used in any of the 17 mineral industries (as defined in § 60.731, ''Mineral processing plant'').

(c) The owner or operator of any facility under paragraph (a) of this section that commences construction, modification, or reconstruction after April 23, 1986, is subject to the requirements of this subpart.

§ 60.731 Definitions.

As used in this subpart, all terms not defined herein shall have the meaning given them in the Clean Air Act and in subpart A of this part.

Calciner means the equipment used to remove combined (chemically bound) water and/or gases from mineral material through direct or indirect heating. This definition includes expansion furnaces and multiple hearth furnaces.

Control device means the air pollution control equipment used to reduce particulate matter emissions released to the atmosphere from one or more affected facilities.

Dryer means the equipment used to remove uncombined (free) water from mineral material through direct or indirect heating.

Installed in series means a calciner and dryer installed such that the exhaust gases from one flow through the other and then the combined exhaust gases are discharged to the atmosphere.

Mineral processing plant means any facility that processes or produces any of the following minerals, their concentrates or any mixture of which the majority (>50 percent) is any of the following minerals or a combination of these minerals: alumina, ball clay, bentonite, diatomite, feldspar, fire clay, fuller's earth, gypsum, industrial sand, kaolin, lightweight aggregate, magnesium compounds, perlite, roofing granules, talc, titanium dioxide, and vermiculite.

§ 60.732 Standards for particulate matter.

Each owner or operator of any affected facility that is subject to the requirements of this subpart shall comply with the emission limitations set forth in this section on and after the date on which the initial performance test required by § 60.8 is completed, but not later than 180 days after the initial startup, whichever date comes first. No emissions shall be discharged into the atmosphere from any affected facility that:

(a) Contains particulate matter in excess of 0.092 gram per dry standard cubic meter (g/dscm) [0.040 grain per dry standard cubic foot (gr/dscf)] for calciners and for calciners and dryers installed in series and in excess of 0.057 g/dscm for dryers; and

(b) Exhibits greater than 10 percent opacity, unless the emissions are discharged from an affected facility using a wet scrubbing control device.

§ 60.733 Reconstruction.

The cost of replacement of equipment subject to high temperatures and abrasion on processing equipment shall not be considered in calculating either the ''fixed capital cost of the new components'' or the ''fixed capital cost that would be required to construct a comparable new facility'' under § 60.15. Calciner and dryer equipment subject to high temperatures and abrasion are: end seals, flights, and refractory lining.

§ 60.734 Monitoring of emissions and operations.

(a) With the exception of the process units described in paragraphs (b), (c), and (d) of this section, the owner or operator of an affected facility subject to the provisions of this subpart who uses a dry control device to comply with the mass emission standard shall install, calibrate, maintain, and operate a continuous monitoring system to measure and record the opacity of emissions discharged into the atmosphere from the control device.

(b) In lieu of a continuous opacity monitoring system, the owner or operator of a ball clay vibrating grate dryer, a bentonite rotary dryer, a diatomite flash dryer, a diatomite rotary calciner, a feldspar rotary dryer, a fire clay rotary dryer, an industrial sand fluid bed dryer, a kaolin rotary calciner, a perlite rotary dryer, a roofing granules fluid bed dryer, a roofing granules rotary dryer, a talc rotary calciner, a titanium dioxide spray dryer, a titanium dioxide fluid bed dryer, a vermiculite fluid bed dryer, or a vermiculite rotary dryer who uses a dry control device may have a certified visible emissions observer measure and record three 6-minute averages of the opacity of visible emissions to the atmosphere each day of operation in accordance with Method 9 of appendix A of part 60.

(c) The owner or operator of a ball clay rotary dryer, a diatomite rotary dryer, a feldspar fluid bed dryer, a fuller's earth rotary dryer, a gypsum rotary dryer, a gypsum flash calciner, gypsum kettle calciner, an industrial sand rotary dryer, a kaolin rotary dryer, a kaolin multiple hearth furnace, a perlite expansion furnace, a talc flash dryer, a talc rotary dryer, a titanium dioxide direct or indirect rotary dryer or a vermiculite expansion furnace who uses a dry control device is exempt from the monitoring requirements of this section.

(d) The owner or operator of an affected facility subject to the provisions of this subpart who uses a wet scrubber to comply with the mass emission standard for any affected facility shall install, calibrate, maintain, and operate monitoring devices that continuously measure and record the pressure

loss of the gas stream through the scrubber and the scrubbing liquid flow rate to the scrubber. The pressure loss monitoring device must be certified by the manufacturer to be accurate within 5 percent of water column gauge pressure at the level of operation. The liquid flow rate monitoring device must be certified by the manufacturer to be accurate within 5 percent of design scrubbing liquid flow rate.

§ 60.735 Recordkeeping and reporting requirements.

(a) Records of the measurements required in § 60.734 of this subpart shall be retained for at least 2 years.

(b) Each owner or operator who uses a wet scrubber to comply with § 60.732 shall determine and record once each day, from the recordings of the monitoring devices in § 60.734(d), an arithmetic average over a 2-hour period of both the change in pressure of the gas stream across the scrubber and the flowrate of the scrubbing liquid.

(c) Each owner or operator shall submit written reports semiannually of exceedances of control device operating parameters required to be monitored by § 60.734 of this subpart. For the purpose of these reports, exceedances are defined as follows:

(1) All 6-minute periods during which the average opacity from dry control devices is greater than 10 percent; or

(2) Any daily 2-hour average of the wet scrubber pressure drop determined as described in § 60.735(b) that is less than 90 percent of the average value recorded according to § 60.736(c) during the most recent performance test that demonstrated compliance with the particulate matter standard; or

(3) Each daily wet scrubber liquid flow rate recorded as described in § 60.735(b) that is less than 80 percent or greater than 120 percent of the average value recorded according to § 60.736(c) during the most recent performance test that demonstrated compliance with the particulate matter standard.

(d) The requirements of this section remain in force until and unless the Agency, in delegating enforcement authority to a State under section 111(c) of the Clean Air Act, approves reporting requirements or an alternative means of compliance surveillance adopted by such State. In that event, affected facilities within the State will be relieved of the obligation to comply with this section provided that they comply with the requirements established by the State.

[57 FR 44503, Sept. 28, 1992, as amended at 58 FR 40591, July 29, 1993]

§ 60.736 Test methods and procedures.

(a) In conducting the performance tests required in § 60.8, the owner or operator shall use the test methods in appendix A of this part or other methods and procedures as specified in this section, except as provided in § 60.8(b).

(b) The owner or operator shall determine compliance with the particulate matter standards in § 60.732 as follows:

(1) Method 5 shall be used to determine the particulate matter concentration. The sampling time and volume for each test run shall be at least 2 hours and 1.70 dscm.

(2) Method 9 and the procedures in § 60.11 shall be used to determine opacity from stack emissions.

(c) During the initial performance test of a wet scrubber, the owner or operator shall use the monitoring devices of § 60.734(d) to determine the average change in pressure of the gas stream across the scrubber and the average flowrate of the scrubber liquid during each of the particulate matter runs. The arithmetic averages of the three runs shall be used as the baseline average values for the purposes of § 60.735(c).

§ 60.737 Delegation of authority.

(a) In delegating implementation and enforcement authority to a State under section 111(c) of the Act, the authorities contained in paragraph (b) of this section shall be retained by the Administrator and not transferred to a State.

(b) Authorities which will not be delegated to States: No restrictions.

Subpart VVV—Standards of Performance for Polymeric Coating of Supporting Substrates Facilities

SOURCE: 54 FR 37551, Sept. 11, 1989, unless otherwise noted.

§ 60.740 Applicability and designation of affected facility.

(a) The affected facility to which the provisions of this subpart apply is each coating operation and any onsite coating mix preparation equipment used to prepare coatings for the polymeric coating of supporting substrates.

(b) Any affected facility for which the amount of VOC used is less than 95 Mg per 12-month period is subject only to the requirements of §§ 60.744(b), 60.747(b), and 60.747(c). If the amount of VOC used is 95 Mg or greater per 12-month period, the facility is subject to all the requirements of this subpart. Once a facility has become subject to the requirements of this subpart, it will remain subject to those requirements regardless of changes in annual VOC use.

(c) This subpart applies to any affected facility for which construction, modification, or reconstruction begins after April 30, 1987, except for the facilities specified in paragraph (d) of this section.

(d) This subpart does not apply to the following:

(1) Coating mix preparation equipment used to manufacture coatings at one plant for shipment to another plant for use in an affected facility (coating operation) or for sale to another company for use in an affected facility (coating operation);

(2) Coating mix preparation equipment or coating operations during those times they are used to prepare or apply waterborne coatings so long as the VOC content of the coating does not exceed 9 percent by weight of the volatile fraction;

(3) Web coating operations that print an image on the surface of the substrate or any coating applied on the same printing line that applies the image.

§ 60.741 Definitions, symbols, and cross-reference tables.

(a) All terms used in this subpart not defined below have the meaning given to them in the Act and in subpart A of this part.

Coating applicator means any apparatus used to apply a coating to a continuous substrate.

Coating mix preparation equipment means all mixing vessels in which solvent and other materials are blended to prepare polymeric coatings.

Coating operation means any coating applicator(s), flashoff area(s), and drying oven(s) located between a substrate unwind station and a rewind station that coats a continuous web to produce a substrate with a polymeric coating. Should the coating process not employ a rewind station, the end of the coating operation is after the last drying oven in the process.

Common emission control device means a device controlling emissions from an affected coating operation as well as from any other emission source.

Concurrent means the period of time in which construction of an emission control device serving an affected facility is commenced or completed, beginning 6 months prior to the date that construction of the affected facility commences and ending 2 years after the date that construction of the affected facility is completed.

Control device means any apparatus that reduces the quantity of a pollutant emitted to the air.

Cover means, with respect to coating mix preparation equipment, a device that fits over the equipment opening to prevent emissions of volatile organic compounds (VOC) from escaping.

Drying oven means a chamber within which heat is used to dry a surface coating; drying may be the only process or one of multiple processes performed in the chamber.

Equivalent diameter means four times the area of an opening divided by its perimeter.

Flashoff area means the portion of a coating operation between the coating applicator and the drying oven where VOC begins to evaporate from the coated substrate.

Natural draft opening means any opening in a room, building, or total enclosure that remains open during operation of the facility and that is not connected to a duct in which a fan is installed. The rate and direction of the natural draft across such an opening is a consequence of the difference in pressures on either side of the wall or barrier containing the opening.

Nominal 1-month period means a calendar month or, if established prior to the performance test in a statement submitted with notification of anticipated startup pursuant to 40 CFR 60.7(a)(2), a similar monthly time period (e.g., 30-day month or accounting month).

Onsite coating mix preparation equipment means those pieces of coating mix preparation equipment located at the same plant as the coating operation they serve.

Polymeric coating of supporting substrates means a web coating process that applies elastomers, polymers, or prepolymers to a supporting web other than paper, plastic film, metallic foil, or metal coil.

Substrate means the surface to which a coating is applied.

Temporary enclosure means a total enclosure that is constructed for the sole purpose of measuring the fugitive VOC emissions from an affected facility.

Total enclosure means a structure that is constructed around a source of emissions and operated so that all VOC emissions are collected and exhausted through a stack or duct. With a total enclosure, there will be no fugitive emissions, only stack emissions. The drying oven itself may be part of the total enclosure.

Vapor capture system means any device or combination of devices designed to contain, collect, and route solvent vapors released from the coating mix preparation equipment or coating operation.

VOC in the applied coating means the product of Method 24 VOC analyses or formulation data (if those data are demonstrated to be equivalent to Method 24 results) and the total volume of coating fed to the coating applicator.

VOC used means the amount of VOC delivered to the coating mix preparation equipment of the affected facility (including any contained in premixed coatings or other coating ingredients prepared off the plant site) for the formulation of polymeric coatings to be applied to supporting substrates at the coating operation, plus any solvent added after initial formulation is complete (e.g., dilution solvent added at the coating operation). If premixed coatings that require no mixing at the plant site are used, ''VOC used'' means the amount of VOC delivered to the coating applicator(s) of the affected facility.

Volatile organic compounds or *VOC* means any organic compounds that participate in atmospheric photochemical reactions; or that are measured by a reference method, an equivalent method, an alternative method, or that are determined by procedures specified under any subpart.

Waterborne coating means a coating which contains more than 5 weight percent water in its volatile fraction.

Web coating means the coating of products, such as fabric, paper, plastic film, metallic foil, metal coil, cord, and yarn, that are flexible enough to be unrolled from a large roll; and coated as a continuous substrate by methods including, but not limited to, knife coating, roll coating, dip coating, impregnation, rotogravure, and extrusion.

(b) The nomenclature used in this subpart has the following meaning:

A_k=the area of each natural draft opening (k) in a total enclosure, in square meters.

C_{aj}=the concentration of VOC in each gas stream (j) exiting the emission control device, in parts per million by volume.

C_{bi}=the concentration of VOC in each gas stream (i) entering the emission control device, in parts per million by volume.

C_{di}=the concentration of VOC in each gas stream (i) entering the emission control device from the affected coating operation, in parts per million by volume.

C_{fk}=the concentration of VOC in each uncontrolled gas stream (k) emitted directly to the atmosphere from the affected coating operation, in parts per million by volume.

C_{gv}=the concentration of VOC in the gas stream entering each individual carbon adsorber vessel (v), in parts per million by volume. For purposes of calculating the efficiency of the individual adsorber vessel, C_{gv} may be measured in the carbon adsorption system's common inlet duct prior to the branching of individual inlet ducts.

C_{hv}=the concentration of VOC in the gas stream exiting each individual carbon adsorber vessel (v), in parts per million by volume.

E=the control device efficiency achieved for the duration of the emission test (expressed as a fraction).

F=the VOC emission capture efficiency of the vapor capture system achieved for the duration of the emission test (expressed as a fraction).

FV=the average inward face velocity across all natural draft openings in a total enclosure, in meters per hour.

H_v=the individual carbon adsorber vessel (v) efficiency achieved for the duration of the emission test (expressed as a fraction).

H_{sys}=the carbon adsorption system efficiency calculated when each adsorber vessel has an individual exhaust stack.

M_{ci}=the total mass (kg) of each coating (i) applied to the substrate at an affected coating operation during a nominal 1-month period as determined from facility records.

M_r=the total mass (kg) of VOC recovered for a nominal 1-month period.

Q_{aj}=the volumetric flow rate of each gas stream (j) exiting the emission control device, in dry standard cubic meters per hour when Method 18 or 25 is used to measure VOC concentration or in standard cubic meters per hour (wet basis) when Method 25A is used to measure VOC concentration.

Q_{bi}=the volumetric flow rate of each gas stream (i) entering the emission control device, in dry standard cubic meters per hour when Method 18 or 25 is used to measure VOC concentration or in standard cubic meters per hour (wet basis) when Method 25A is used to measure VOC concentration.

Q_{di}=the volumetric flow rate of each gas stream (i) entering the emission control device from the affected coating operation, in dry standard cubic meters per hour when Method 18 or 25 is used to measure VOC concentration or in standard cubic meters per hour (wet basis) when Method 25A is used to measure VOC concentration.

Q_{fk}=the volumetric flow rate of each uncontrolled gas stream (k) emitted directly to the atmosphere from the affected coating operation, in dry standard cubic meters per hour when Method 18 or 25 is used to measure VOC concentration or in standard cubic meters per hour (wet basis) when Method 25A is used to measure VOC concentration.

Q_{gv}=the volumetric flow rate of the gas stream entering each individual carbon adsorber vessel (v), in dry standard cubic meters per hour when Method 18 or 25 is used to measure VOC concentration or in standard cubic meters per hour (wet basis) when Method 25A is used to measure VOC concentration. For purposes of calculating the efficiency of the individual adsorber vessel, the value of Q_{gv} can be assumed to equal the value of Q_{hv} measured for that adsorber vessel.

Q_{hv}=the volumetric flow rate of the gas stream exiting each individual carbon adsorber vessel (v), in dry standard cubic meters per hour when Method 18 or 25 is used to measure VOC concentration or in standard cubic meters per hour (wet basis) when Method 25A is used to measure VOC concentration.

Q_{ini}=the volumetric flow rate of each gas stream (i) entering the total enclosure through a forced makeup air duct, in standard cubic meters per hour (wet basis).

Q_{outj}=the volumetric flow rate of each gas stream (j) exiting the total enclosure through an exhaust duct or hood, in standard cubic meters per hour (wet basis).

R=the overall VOC emission reduction achieved for the duration of the emission test (expressed as a fraction).

RS_i=the total mass (kg) of VOC retained on the coated substrate after oven drying or contained in waste coating for a given combination of coating and substrate.

W_{oi}=the weight fraction of VOC in each coating (i) applied at an affected coating operation during a nominal 1-month period as determined by Method 24.

(c) Tables 1a and 1b present a cross reference of the affected facility status and the relevant section(s) of the regulation.

TABLE 1A—CROSS REFERENCE[a b]

Status	Standard	Compliance provisions § 60.743
A. Coating operation:		
1. If projected VOC use is <95 Mg/yr.	§ 60.740(b): Monitor VOC use	Not applicable.
2. If projected VOC use is ≥95 Mg/yr.	§ 60.742(b)(1): Reduce VOC emissions to the atmosphere from the coating operation by at least 90 percent; or.	(a)(1), (a)(2), (a)(3), or (a)(4);
	§ 60.742(b)(2): Install, operate, and maintain a total enclosure around the coating operation and vent the captured VOC emissions from the total enclosure to a control device that is at least 95 percent efficient.	(b), (e).
B. Coating mix preparation equipment:		
1. If projected VOC use is ≥95 Mg/yr but <130 Mg/yr.	§ 60.742(c)(3): (i) Install, operate, and maintain a cover on each piece of affected equipment; or (ii) install, operate, and maintain a cover on each piece of affected equipment and vent VOC emissions to a VOC control device.	(d), (e).

TABLE 1A—CROSS REFERENCE[a] [b]—Continued

Status	Standard	Compliance provisions § 60.743
2. If projected VOC use is ≥130 Mg/yr but there is no concurrent construction of a control device.	§ 60.742(c)(2): (i) Install, operate, and maintain a cover on each piece of affected equipment; or (ii) install, operate, and maintain a cover on each piece of affected equipment and vent VOC emissions to a VOC control device.	(d).
3. If projected VOC use is ≥130 Mg/yr and there is concurrent construction of a control device.	§ 60.742(c)(1): Install, operate, and maintain a cover on each piece of affected equipment and vent VOC emissions from the covered equipment to a 95 percent efficient control device while preparation of the coating is taking place within the vessel.	(c), (e).

[a] This table is presented for the convenience of the user and is not intended to supersede the language of the regulation. For the details of the requirements, refer to the text of the regulation.
[b] Refer to Table 1b to determine which subsections of §§ 60.744, 60.745, and 60.747 correspond to each compliance provision (§ 60.743).

TABLE 1B—CROSS REFERENCE

Compliance provisions—§ 60.743	Test methods—§ 60.745	Category/equipment[a]	Monitoring requirements—§ 60.744	Reporting and recordkeeping requirements—§ 60.747
A. Coating operation:				
(a)(1)—Gaseous emission test for coating operations not using carbon adsorption beds with individual exhausts.	(b)–(g)	General, CA, CO, TI, CI, PE, TE.	(a), (i), (j), (k), (c)(1), (d), (e), (f), (g).	(a), (d)(7), (f), (g), (h), (d)(1)(i), (d)(2)(i), (d)(3), (d)(4), (d)(5), (d)(6).
(a)(2)—Gaseous emission test for coating operations using carbon adsorption beds with individual exhausts.	(b)–(g)	General, CA, PE, TE	(a), (i), (j), (k), (c)(2), (g).	(a), (d)(7), (f), (g), (h), (d)(1)(ii), (d)(2)(ii), (d)(6).
(a)(3)—Monthly liquid material balance—can be used only when a VOC recovery device controls only those emissions from one affected coating operation.	(a)	VOC recovery	(i), (k)	(e), (f), (g), (h).
(a)(4)—Short-term (3 to 7 day) liquid material balance—may be used as an alternative to (a)(3).	(a)	General, CA, CO, PE, TE.	(a), (i), (j), (k), (c)(1), (c)(2), (d), (g).	(a), (d)(7), (f), (g), (h), (d)(1), (d)(2), (d)(3), (d)(6).
(b)—Alternative standard for coating operation—demonstrate use of approved total enclosure and emissions vented to a 95 percent efficient control device.	(b)–(g)	General, CA, CO, TI, CI, PE, TE.	(a), (i), (j), (k), (c)(1), (c)(2), (d), (e), (f), (h).	(a), (d)(7), (f), (g), (h), (d)(1), (d)(2), (d)(3), (d)(4), (d)(5), (d)(6).
B. Coating mix preparation equipment:				
(c)—Standard for equipment servicing a coating operation with concurrent construction of a control device that uses at least 130 Mg/yr of VOC—demonstrate that covers meeting specifications are installed and used properly; procedures detailing proper use are posted; the mix equipment is vented to a 95 percent efficient control device.	(b)–(g)	General, CA, TI, CI	(a), (i), (j), (k), (c)(1), (c)(2), (e), (f).	(a), (d)(7), (f), (g), (h), (d)(1), (d)(2), (d)(4), (d)(5).
(d)—Standard for equipment servicing a coating operation that does not have concurrent construction of a control device but uses at least 130 Mg/yr of VOC or for equipment servicing a coating operation that uses <130 Mg/yr but ≥95 Mg/yr of VOC—demonstrate that covers meeting specifications are installed and used properly; procedures detailing proper use are posted; the mix equipment is vented to a control device (optional).	No other requirements apply.	.....	.....	

[a] CA=carbon adsorber; CO=condenser; TI=thermal incinerator; CI=catalytic incinerator; PE=partial enclosure; TE=total enclosure.

§ 60.742 Standards for volatile organic compounds.

(a) Each owner or operator of an affected facility that is subject to the requirements of this subpart shall comply with the emissions limitations set forth in this section on and after the date on which the initial performance test required by § 60.8 is completed, but not later than 60 days after achieving the maximum production rate at which the affected facility will be operated or 180 days after initial startup, whichever date comes first.

(b) For the coating operation, each owner or operator of an affected facility shall either:

(1) Reduce VOC emissions to the atmosphere from the coating operation by at least 90 percent (''emission reduction'' standard); or

(2) Install, operate, and maintain a total enclosure around the coating operation and vent the captured VOC emissions from the total enclosure to a control device that is at least 95 percent effecient (alternative standard).

(c) For the onsite coating mix preparation equipment of an affected facility, the owner or operator shall comply with the following requirements, as applicable:

(1) For an affected facility that has concurrent construction of a control device and uses at least 130 Mg of VOC per 12-month period, the owner or operator shall install, operate, and maintain a cover on each piece of affected coating mix preparation equipment and vent VOC emissions from the covered mix equipment to a 95 percent efficient control device while preparation of the coating is taking place within the vessel.

(2) For an affected facility that does not have concurrent construction of a control device but uses at least 130 Mg of VOC per 12-month period, the owner or operator shall either:

(i) Install, operate, and maintain a cover on each piece of affected coating mix preparation equipment; or

(ii) Install, operate, and maintain a cover on each piece of affected coating mix preparation equipment and vent VOC emissions to a VOC control device.

(3) For an affected facility that uses at least 95 Mg but less than 130 Mg of VOC per 12-month period, the owner or operator shall either.

(i) Install, operate, and maintain a cover on each piece of affected coating mix preparation equipment; or

(ii) Install, operate, and maintain a cover on each piece of affected coating mix preparation equipment and vent VOC emissions to a VOC control device.

§ 60.743 Compliance provisions.

(a) To demonstrate compliance with the emission reduction standard for coating operations specified in § 60.742(b)(1), the owner or operator of the affected facility shall use one of the following methods.

(1) *Gaseous emission test for coating operations not using carbon adsorption beds with individual exhausts.* This method is applicable when the emissions from any affected coating operation are controlled by a control device other than a fixed-bed carbon adsorption system with individual exhaust stacks for each adsorber vessel. The owner or operator using this method shall comply with the following procedures:

(i) Construct the vapor capture system and control device so that all gaseous volumetric flow rates and total VOC emissions can be accurately determined by the applicable test methods and procedures specified in § 60.745(b) through (g);

(ii) Determine capture efficiency from the coating operation by capturing, venting, and measuring all VOC emissions from the coating operation. During a performance test, the owner or operator of an affected coating operation located in an area with other sources of VOC shall isolate the coating operation emissions from all other sources of VOC by one of the following methods:

(A) Build a temporary enclosure, as defined in § 60.741(a) and conforming to the requirements of § 60.743(b)(1), around the affected coating operation. The temporary enclosure must be constructed and ventilated (through stacks suitable for testing) so that it has minimal impact on performance of the capture system; or

(B) Shut down all other sources of VOC and continue to exhaust fugitive

emissions from the affected coating operation through any building ventilation system and other room exhausts such as those on drying ovens. All such ventilation air must be vented through stacks suitable for testing because the VOC content in each must be determined.

(iii) Operate the emission control device with all emission sources connected and operating.

(iv) Determine the efficiency (E) of the control device by Equation 1:

$$E = \frac{\sum_{i=1}^{n} Q_{bi}C_{bi} - \sum_{j=1}^{n} Q_{aj}C_{aj}}{\sum_{i=1}^{n} Q_{bi}C_{bi}} \qquad \text{(Equation 1)}$$

(v) Determine the efficiency (F) of the vapor capture system by Equation 2:

$$F = \frac{\sum_{i=1}^{n} Q_{di}C_{di}}{\sum_{i=1}^{n} Q_{di}C_{di} + \sum_{k=1}^{p} Q_{fk}C_{fk}} \qquad \text{(Equation 2)}$$

(vi) For each affected coating operation subject to §60.742(b)(1) (emission reduction standard for coating operations), compliance is demonstrated if the product of (E)x(F) is equal to or greater than 0.90.

(2) *Gaseous emission test for coating operations using carbon adsorption beds with individual exhausts.* This method is applicable when emissions from any affected coating operation are controlled by a fixed-bed carbon adsorption system with individual exhaust stacks for each adsorber vessel. The owner or operator using this method shall comply with the following procedures:

(i) Construct the vapor capture system and control device so that each volumetric flow rate and the total VOC emissions can be accurately determined by the applicable test methods and procedures specified in §60.745 (b) through (g);

(ii) Assure that all VOC emissions from the coating operation are segregated from other VOC sources and that the emissions can be captured for measurement, as described in §60.743(a)(1)(ii) (A) and (B);

(iii) Operate the emission control device with all emission sources connected and operating;

(iv) Determine the efficiency (H_v) of each individual adsorber vessel (v) using Equation 3:

$$H_v = \frac{Q_{gv}C_{gv} - Q_{hv}C_{hv}}{Q_{gv}C_{gv}} \qquad \text{(Equation 3)}$$

(v) Determine the efficiency of the carbon adsorption system (H_{sys}) by computing the average efficiency of the adsorber vessels as weighted by the volumetric flow rate (Q_{hv}) of each individual adsorber vessel (v) using Equation 4:

$$H_{sys} = \frac{\sum_{v=1}^{g} H_v Q_{hv}}{\sum_{v=1}^{g} Q_{hv}} \qquad \text{(Equation 4)}$$

(vi) Determine the efficiency (F) of the vapor capture system using Equation (2).

(vii) For each affected coating operation subject to §60.742(b)(1) (emission reduction standard for coating operations), compliance is demonstrated if the product of (H_{sys})x(F) is equal to or greater than 0.90.

(3) *Monthly liquid material balance.* This method can be used only when a VOC recovery device controls only those emissions from one affected coating operation. It may not be used if the VOC recovery device controls emissions from any other VOC emission sources. When demonstrating compliance by this method, §60.8(f) (Performance Tests) of this part does not apply. The owner or operator using this method shall comply with the following procedures to determine the VOC emission reduction for each nominal 1-month period:

(i) Measure the amount of coating applied at the coating applicator. This quantity shall be determined at a time and location in the process after all ingredients (including any dilution solvent) have been added to the coating, or appropriate adjustments shall be made to account for any ingredients added after the amount of coating has been determined;

(ii) Determine the VOC content of all coatings applied using the test method specified in §60.745(a). This value shall be determined at a time and location in the process after all ingredients (including any dilution solvent) have been added to the coating, or appropriate adjustments shall be made to account for any ingredients added after the VOC content in the coating has been determined;

(iii) Install, calibrate, maintain, and operate, according to the manufacturer's specifications, a device that indicates the cumulative amount of VOC recovered by the control device over each nominal 1-month period. The device shall be certified by the manufacturer to be accurate to within ±2.0 percent;

(iv) Measure the amount of VOC recovered; and

(v) Calculate the overall VOC emission reduction (R) for each and every nominal 1-month period using Equation 5. Emissions during startups and shutdowns are to be included when determining R because startups and shutdowns are part of normal operation for this source category.

$$R = \frac{M_r}{\sum_{i=1}^{n} [W_{oi} M_{ci} - RS_i]} \qquad \text{(Equation 5)}$$

If the value of R is equal to or greater than 0.90, compliance with § 60.742(b)(1) is demonstrated.

(A) The value of RS_i is zero unless the owner or operator submits the following information to the Administrator for approval of a measured value of RS_i that is greater than zero but less than or equal to 6 percent by weight of the liquid VOC applied:

(*1*) Measurement techniques; and

(*2*) Documentation that the measured value of RS_i exceeds zero but is less than or equal to 6 percent by weight of the liquid VOC applied.

(B) For those facilities not subject to paragraph (a)(3)(v)(A) of this section, the value of RS_i is zero unless the owner or operator submits the following information to the Administrator for approval of a measured value of RS_i that is greater than 6 percent by weight of the liquid VOC applied.

(*1*) Measurement techniques;

(*2*) Documentation that the measured value of RS_i exceeds 6 percent by weight of the liquid VOC applied; and

(*3*) Either documentation of customer specifications requiring higher values or documentation that the desired properties of the product make it necessary for RS_i to exceed 6 percent by weight of the liquid VOC applied and that such properties cannot be achieved by other means.

(C) The measurement techniques of paragraphs (a)(3)(v)(A)(*1*) and (a)(3)(v)(B)(*1*) of this section shall be submitted to the Administrator for approval with the notification of anticipated startup required under § 60.7(a)(2).

(vi) The point at which M_r is to be measured shall be established when the compliance procedures are approved. The presumptive point of measurement shall be prior to separation/ purification; a point after separation/purification may be adopted for enhanced convenience or accuracy.

(4) *Short-term liquid material balance.* This method may be used as an alternative to the monthly liquid material balance described in paragraph (a)(3) of this section. The owner or operator using this method shall comply with the following procedures to determine VOC emission reduction for a 3- to 7-day period and shall continuously monitor VOC emissions as specified in § 60.744.

(i) Use the procedures described in paragraphs (a)(3) (i) through (vi) of this section to determine the overall emission reduction, R. Compliance is demonstrated if the value of R is equal to or greater than 0.90.

(ii) The number of days for the performance test (3 to 7) is to be based on the affected facility's representative performance consistent with the requirements of § 60.8(c). Data demonstrating that the chosen test period is representative shall be submitted to the Administrator for approval with the notification of anticipated startup required under § 60.7(a)(2).

(b) Each owner or operator of an affected coating operation subject to the standard specified in § 60.742(b)(2) (alternative standard for coating operations) shall:

(1) Demonstrate that a total enclosure is installed. The total enclosure shall either be approved by the Administrator in accordance with the provisions of § 60.746, or meet the requirements in paragraphs (b)(1) (i) through (vi) of this section, as follows:

(i) The only openings in the enclosure are forced makeup air and exhaust ducts and natural draft openings such as those through which raw materials enter and exist the coating operation;

(ii) Total area of all natural draft openings does not exceed 5 percent of the total surface area of the total enclosure's walls, floor, and ceiling;

(iii) All access doors and windows are closed during normal operation of the

enclosed coating operation, except for brief, occasional openings to accommodate process equipment adjustments. If such openings are frequent, or if the access door or window remains open for a significant amount of time during the process operation, it must be considered a natural draft opening. Access doors used routinely by workers to enter and exit the enclosed area shall be equipped with automatic closure devices;

(iv) Average inward face velocity (FV) across all natural draft openings is a minimum of 3,600 meters per hour as determined by the following procedures:

(A) Construct all forced makeup air ducts and all exhaust ducts so that the volumetric flow rate in each can be accurately determined by the test methods and procedures specified in § 60.745 (c) and (d). Volumetric flow rates shall be calculated without the adjustment normally made for moisture content; and

(B) Determine FV by Equation 6:

$$FV = \frac{\sum_{j=1}^{n} Q_{out\ j} - \sum_{i=1}^{p} Q_{in\ i}}{\sum_{k=1}^{q} A_k} \qquad \text{(Equation 6)}$$

(v) The air passing through all natural draft openings flows into the enclosure continuously. If FV is less than or equal to 9,000 meters per hour, the continuous inward airflow shall be verified by continuous observation using smoke tubes, streamers, tracer gases, or other means approved by the Administrator over the period that the volumetric flow rate tests required to determine FV are carried out. If FV is greater than 9,000 meters per hour, the direction of airflow thourgh the natural draft openings shall be presumed to be inward at all times without verification.

(vi) All sources of emissions within the enclosure shall be a minimum of four equivalent diameters away from each natural draft opening.

(2) Determine the control device efficiency using Equation (1) or Equations (3) and (4), as applicable, and the test methods and procedures specified in § 60.745 (b) through (g).

(3) Compliance is demonstrated if the installation of a total enclosure is demonstrated and the value of E determined from Equation (1) or the value of H_{sys} determined from Equations (3) and (4), as applicable, is equal to or greater than 0.95.

(c) To demonstrate compliance with § 60.742(c)(1) (standard for coating mix preparation equipment servicing a coating operation with concurrent construction of a control device that uses at least 130 Mg per year of VOC), each owner or operator of affected coating mix preparation equipment shall demonstrate that:

(1) Covers meeting the following specifications have been installed and are being used properly:

(i) Cover shall be closed at all times except when adding ingredients, withdrawing samples, transferring the contents, or making visual inspection when such activities cannot be carried out with cover in place. Such activities shall be carried out through ports of the minimum practical size;

(ii) Cover shall extend at least 2 centimeters beyond the outer rim of the opening or shall be attached to the rim;

(iii) Cover shall be of such design and construction that contact is maintained between cover and rim along the entire perimeter;

(iv) Any breach in the cover (such as a slit for insertion of a mixer shaft or port for addition of ingredients) shall be covered consistent with paragraphs

(c)(1) (i), (ii), and (iii) of this section when not actively in use. An opening sufficient to allow safe clearance for a mixer shaft is acceptable during those periods when the shaft is in place; and

(v) A polyehtylene or nonpermanent cover may be used provided it meets the requirements of paragraphs (c)(1) (ii), (iii), and (iv) of this section. Such a cover shall not be reused after once being removed.

(2) Procedures detailing the proper use of covers, as specified in paragraph (c)(1)(i) of this section, have been posted in all areas where affected coatings mix preparation equipment is used;

(3) The coating mix preparation equipment is vented to a control device while preparation of the coating is taking place within the vessel; and

(4) The control device efficiency (E or H_{sys}, as applicable) determined using Equation (1) or Equations (3) and (4), respectively, and the test methods and procedures specified in §60.745 (b) through (g) is equal to or greater than 0.95.

(d) To demonstrate compliance with §60.742(c)(2) (standard for coating mix preparation equipment servicing a coating operation that does not have concurrent construction of a control device but uses at least 130 Mg of VOC per year) or §60.742(c)(3) (standard for coating mix preparation equipment servicing a coating operation that uses at least 95 Mg but less than 130 Mg of VOC per year), each owner or operator of affected coating mix preparation equipment shall demonstrate upon inspection that:

(1) Covers satisfying the specifications in paragraphs (c)(1) (i) through (v) of this section have been installed and are being properly operated and maintained; and

(2) Procedures detailing the proper use of covers, as specified in paragraph (c)(1)(i) of this section, have been posted in all areas where affected coating mix preparation equipment is used.

(3) Owners or operators meeting the standard specified in §60.742 (c)(2)(ii) or (c)(3)(ii) shall also demonstrate that the coating mix preparation equipment is vented to a control device.

(e) If a control device other than a carbon adsorber, condenser, or incinerator is used to control emissions from an affected facility, the necessary operating specifications for that device must be approved by the Administrator. An example of such a device is a flare.

§60.744 Monitoring requirements.

(a) Each owner or operator of an affected facility shall install and calibrate all monitoring devices required under the provisions of this section according to the manufacturer's specifications, prior to the initial performance test in locations such that representative values of the monitored parameters will be obtained. The parameters to be monitored shall be continuously measured and recorded during each performance test.

(b) Each owner or operator of an affected facility that uses less than 95 Mg of VOC per year and each owner or operator of an affected facility subject to the provisions specified in §60.742(c)(3) shall:

(1) Make semiannual estimates of the projected annual amount of VOC to be used for the manufacture of polymeric coated substrate at the affected coating operation in that year; and

(2) Maintain records of actual VOC use.

(c) Each owner or operator of an affected facility controlled by a carbon adsorption system and demonstrating compliance by the procedures described in §60.743 (a)(1), (2), (b), or (c) (which include control device efficiency determinations) or §60.743(a)(4) (short-term liquid material balance) shall carry out the monitoring provisions of paragraph (c)(1) or (2) of this section, as appropriate.

(1) For carbon adsorption systems with a common exhaust stack for all the individual adsorber vessels, install, calibrate, maintain, and operate, according to the manufacturer's specifications, a monitoring device that continuously indicates and records the concentration level of organic compounds in either the control device outlet gas stream or in both the control device inlet and outlet gas streams. The outlet gas stream shall be monitored if the percent increase in the concentration level of organic compounds is used as the basis for reporting, as described in §60.747(d)(1)(i). The

inlet and outlet gas streams shall be monitored if the percent control device efficiency is used as the basis for reporting, as described in § 60.747(d)(2)(i).

(2) For carbon adsorption systems with individual exhaust stacks for each adsorber vessel, install, calibrate, maintain, and operate, according to the manufacturer's specifications, a monitoring device that continuously indicates and records the concentration level of organic compounds in the outlet gas stream for a minimum of one complete adsorption cycle per day for each adsorber vessel. The owner or operator may also monitor and record the concentration level of organic compounds in the common carbon adsorption system inlet gas stream or in each individual carbon adsorber vessel inlet stream. The outlet gas streams shall be monitored if the percent increase in the concentration level of organic compounds is used as the basis for reporting, as described in § 60.747(d)(1)(ii). In this case, the owner or operator shall compute daily a 3-day rolling average concentration level of organics in the outlet gas stream from each individual adsorber vessel. The inlet and outlet gas streams shall be monitored if the percent control device efficiency is used as the basis for reporting, as described in § 60.747(d)(2)(ii). In this case, the owner or operator shall compute daily a 3-day rolling average efficiency for each individual adsorber vessel.

(d) Each owner or operator of an affected facility controlled by a condensation system and demonstrating compliance by the test methods described in § 60.743 (a)(1), (2), (b), or (c) (which include control device efficiency determinations) or § 60.743(a)(4) (short-term liquid material balance) shall install, calibrate, maintain, and operate, according to the manufacturer's specifications, a monitoring device that continuously indicates and records the temperature of the condenser exhaust stream.

(e) Each owner or operator of an affected facility controlled by a thermal incinerator and demonstrating compliance by the test methods described in § 60.743 (a)(1), (2), (b), or (c) (which include control device efficiency determinations) shall install, calibrate, maintain, and operate, according to the manufacturer's specifications, a monitoring device that continuously indicates and records the combustion temperature of the incinerator. The monitoring device shall have an accuracy within ±1 percent of the temperature being measured in Celsius degrees.

(f) Each owner or operator of an affected facility controlled by a catalytic incinerator and demonstrating compliance by the test methods described in § 60.743 (a)(1), (2), (b), or (c) (which include control device efficiency determinations) shall install, calibrate, maintain, and operate, according to the manufacturer's specifications, a monitoring device that continuously indicates and records the gas temperature both upstream and downstream of the catalyst bed. The monitoring device shall have an accuracy within ±1 percent of the temperature being measured in Celsius degrees.

(g) Each owner or operator of an affected facility who demonstrates compliance by the test methods described in § 60.743(a)(1) or (2) (which include vapor capture system efficiency determinations) or § 60.743(a)(4) (short-term liquid material balance) shall submit a monitoring plan for the vapor capture system to the Administrator for approval with the notification of anticipated startup required under § 60.7(a)(2) of the General Provisions. This plan shall identify the parameter to be monitored as an indicator of vapor capture system performance (e.g., the amperage to the exhaust fans or duct flow rates) and the method for monitoring the chosen parameter. The owner or operator shall install, calibrate, maintain, and operate, according to the manufacturer's specifications, a monitoring device that continuously indicates and records the value of the chosen parameter.

(h) Each owner or operator of an affected facility who demonstrates compliance as described in § 60.743(b) shall follow the procedures described in paragraph (g) of this section to establish a monitoring system for the total enclosure.

(i) Each owner or operator of an affected facility shall record time periods of mixing or coating operations when the emission control device is malfunctioning or not in use.

(j) Each owner or operator of an affected facility shall record time periods of mixing or coating operations when each monitoring device is malfunctioning or not in use.

(k) Records of the measurements and calculations required in § 60.743 and § 60.744 must be retained for at least 2 years following the date of the measurements and calculations.

§ 60.745 Test methods and procedures.

Methods in appendix A of this part, except as provided under § 60.8(b), shall be used to determine compliance as follows:

(a) Method 24 is used to determine the VOC content in coatings. If it is demonstrated to the satisfaction of the Administrator that coating formulation data are equivalent to Method 24 results, formulation data may be used. In the event of any inconsistency between a Method 24 test and a facility's formulation data, the Method 24 test will govern. For Method 24, the coating sample must be a 1-liter sample collected in a 1-liter container at a point in the process where the sample will be representative of the coating applied to the substrate (i.e., the sample shall include any dilution solvent or other VOC added during the manufacturing process). The container must be tightly sealed immediately after the sample is collected. Any solvent or other VOC added after the sample is taken must be measured and accounted for in the calculations that use Method 24 results.

(b) Method 25 shall be used to determine VOC concentrations from incinerator gas streams. Alternative Methods (18 or 25A), may be used as explained in the applicability section of Method 25 in cases where use of Method 25 is demonstrated to be technically infeasible. The owner or operator shall submit notice of the intended test method to the Administrator for approval along with the notification of the performance test required under § 60.8(d) of the General Provisions. Except as indicated in paragraphs (b)(1) and (b)(2) of this section, the test shall consist of three separate runs, each lasting a minimum of 30 minutes.

(1) When the method is to be used in the determination of the efficiency of a fixed-bed carbon adsorption system with a common exhaust stack for all the individual adsorber vessels pursuant to § 60.743 (a)(1), (b), or (c), the test shall consist of three separate runs, each coinciding with one or more complete system rotations through the adsorption cycles of all the individual adsorber vessels.

(2) When the method is to be used in the determination of the efficiency of a fixed-bed carbon adsorption system with individual exhaust stacks for each adsorber vessel pursuant to § 60.743 (a)(2), (b), or (c), each adsorber vessel shall be tested individually. Each test shall consist of three separate runs, each coinciding with one or more complete adsorption cycles.

(c) Method 1 or 1A is used for sample and velocity traverses;

(d) Method 2, 2A, 2C, or 2D is used for velocity and volumetric flow rates;

(e) Method 3 is used for gas analysis;

(f) Method 4 is used for stack gas moisture;

(g) Methods 2, 2A, 2C, or 2D; 3; and 4 shall be performed, as applicable, at least twice during each test run.

§ 60.746 Permission to use alternative means of emission limitation.

(a) If, in the Administrator's judgment, an alternative means of emission limitation will achieve a reduction in emissions of VOC from any emission point subject to § 60.742(c) at least equivalent to that required by § 60.742(b)(2) or § 60.742(c), respectively, the Administrator will publish in the FEDERAL REGISTER a notice permitting the use of the alternative means. The Administrator may condition permission on requirements that may be necessary to ensure operation and maintenance to achieve the same emission reduction as specified in § 60.742(b)(2) or § 60.742(c), respectively.

(b) Any notice under paragraph (a) of this section shall be published only after public notice and an opportunity for a public hearing.

(c) Any person seeking permission under this section shall submit to the Administrator either results from an emission test that accurately collects and measures all VOC emissions from a given control device or an engineering

evaluation that accurately determines such emissions.

§ 60.747 Reporting and recordkeeping requirements.

(a) For each affected facility subject to the requirements of § 60.742(b) and (c), the owner or operator shall submit the performance test data and results to the Administrator as specified in § 60.8(a) of this part. In addition, the average values of the monitored parameters measured at least every 15 minutes and averaged over the period of the performance test shall be submitted with the results of all performance tests.

(b) Each owner or operator of an affected facility subject to the provisions specified in § 60.742(c)(3) and claiming to use less than 130 Mg of VOC in the first year of operation and each owner or operator of an affected facility claiming to use less than 95 Mg of VOC in the first year of operation shall submit to the Administrator, with the notification of anticipated startup required under § 60.7(a)(2) of the General Provisions, a material flow chart indicating projected VOC use. The owner or operator shall also submit actual VOC use records at the end of the initial year.

(c) Each owner or operator of an affected facility subject to the provisions of § 60.742(c)(3) and initially using less than 130 Mg of VOC per year and each owner or operator of an affected facility initially using less than 95 Mg of VOC per year shall:

(1) Record semiannual estimates of projected VOC use and actual 12-month VOC use;

(2) Report the first semiannual estimate in which projected annual VOC use exceeds the applicable cutoff; and

(3) Report the first 12-month period in which the actual VOC use exceeds the applicable cutoff.

(d) Each owner or operator of an affected facility demonstrating compliance by the methods described in § 60.743(a)(1), (2), (4), (b), or (c) shall maintain records and submit quarterly reports to the Administrator documenting the following:

(1) For those affected facilities monitoring only the carbon adsorption system outlet concentration levels of organic compounds, the periods (during actual coating operations) specified in paragraph (d)(1)(i) or (ii) of this section, as applicable.

(i) For carbon adsorption systems with a common exhaust stack for all the individual adsorber vessels, all periods of three consecutive system rotations through the adsorption cycles of all the individual adsorber vessels during which the average value of the concentration level of organic compounds in the common outlet gas stream is more than 20 percent greater than the average value measured during the most recent performance test that demonstrated compliance.

(ii) For carbon adsorption systems with individual exhaust stacks for each adsorber vessel, all 3-day rolling averages for each adsorber vessel when the concentration level of organic compounds in the individual outlet gas stream is more than 20 percent greater than the average value for that adsorber vessel measured during the most recent performance test that demonstrated compliance.

(2) For those affected facilities monitoring both the carbon adsorption system inlet and outlet concentration levels of organic compounds, the periods (during actual coating operations), specified in paragraph (d)(2)(i) or (ii) of this section, as applicable.

(i) For carbon adsorption systems with a common exhaust stack for all the individual adsorber vessels, all periods of three consecutive adsorption cycles of all the individual adsorber vessels during which the average carbon adsorption system efficiency falls below the applicable level as follows:

(A) For those affected facilities demonstrating compliance by the performance test method described in § 60.743(a)(1), the value of E determined using Equation (1) during the most recent performance test that demonstrated compliance.

(B) For those affected facilities demonstrating compliance by the performance test described in § 60.743(a)(4), the average value of the system efficiency measured with the monitor during the most recent performance test that demonstrated compliance.

(C) For those affected facilities demonstrating compliance pursuant to §60.743(b) or (c), 0.95.

(ii) For carbon adsorption systems with individual exhaust stacks for each adsorber vessel, all 3-day rolling averages for each adsorber vessel during which the average carbon adsorber vessel efficiency falls below the applicable level as follows:

(A) For those affected facilities demonstrating compliance by the performance test method described in §60.743(a)(2), (b), or (c), the value of H_v determined using Equation (3) during the most recent performance test that demonstrated compliance.

(B) For those affected facilities demonstrating compliance by the performance test described in §60.743(a)(4), the average efficiency for that adsorber vessel measured with the monitor during the most recent performance test that demonstrated compliance.

(3) For those affected facilities monitoring condenser exhaust gas temperature, all 3-hour periods (during actual coating operations) during which the average exhaust temperature is 5 or more Celsius degrees above the average temperature measured during the most recent performance test that demonstrated compliance;

(4) For those affected facilities monitoring thermal incinerator combustion gas temperature, all 3-hour periods (during actual coating operations) during which the average combustion temperature of the device is more than 28 Celsius degrees below the average combustion temperature of the device during the most recent performance test that demonstrated compliance;

(5) For those affected facilities monitoring catalytic incinerator catalyst bed temperature, all 3-hour periods (during actual coating operations) during which the average gas temperature immediately before the catalyst bed is more than 28 Celsius degrees below the average gas temperature during the most recent performance test that demonstrated compliance and all 3-hour periods (during actual coating operations) during which the average gas temperature difference across the catalyst bed is less than 80 percent of the average gas temperature difference during the most recent performance test that demonstrated compliance;

(6) For each affected facility monitoring a total enclosure pursuant to §60.744(h) or vapor capture system pursuant to §60.744(g), all 3-hour periods (during actual coating operations) during which the average total enclosure or vapor capture system monitor readings vary by 5 percent or more from the average value measured during the most recent performance test that demonstrated compliance.

(7) Each owner or operator of an affected coating operation not required to submit reports under paragraphs (d)(1) through (6) of this section because no reportable periods have occurred shall submit semiannual statements clarifying this fact.

(e) Each owner or operator of an affected coating operation, demonstrating compliance by the test methods described in §60.743(a)(3) (liquid-liquid material balance) shall submit the following:

(1) For months of compliance, semiannual reports to the Administrator stating that the affected coating operation was in compliance for each 1-month period; and

(2) For months of noncompliance, quarterly reports to the Administrator documenting the 1-month amount of VOC contained in the coatings, the 1-month amount of VOC recovered, and the percent emission reduction for each month.

(f) Each owner or operator of an affected coating operation, either by itself or with associated coating mix preparation equipment, shall submit the following with the reports required under paragraphs (d) and (e) of this section:

(1) All periods during actual mixing or coating operations when a required monitoring device (if any) was malfunctioning or not operating; and

(2) All periods during actual mixing or coating operations when the control device was malfunctioning or not operating.

(g) The reports required under paragraphs (b), (c), (d), and (e) of this section shall be postmarked within 30 days of the end of the reporting period.

(h) Records required in §60.747 must be retained for at least 2 years.

(i) The requirements of this section remain in force until and unless EPA, in delegating enforcement authority to a State under section 111(c) of the Act, approves reporting requirements or an alternative means of compliance surveillance adopted by such States. In this event, affected sources within the State will be relieved of the obligation to comply with this subsection, provided that they comply with the requirements established by the State.

§ 60.748 Delegation of authority.

(a) In delegating implementation and enforcement authority to a State under section 111(c) of the Act, the authorities contained in paragraph (b) of this section shall be retained by the Administrator and not transferred to a State.

(b) Authorities that will not be delegated to States: §§ 60.743(a)(3)(v) (A) and (B); 60.743(e); 60.745(a); 60.746.

Subpart WWW—Standards of Performance for Municipal Solid Waste Landfills

SOURCE: 61 FR 9919, Mar. 12, 1996, unless otherwise noted.

§ 60.750 Applicability, designation of affected facility, and delegation of authority.

(a) The provisions of this subpart apply to each municipal solid waste landfill that commenced construction, reconstruction or modification on or after May 30, 1991. Physical or operational changes made to an existing MSW landfill solely to comply with Subpart Cc of this part are not considered construction, reconstruction, or modification for the purposes of this section.

(b) The following authorities shall be retained by the Administrator and not transferred to the State: § 60.754(a)(5).

(c) Activities required by or conducted pursuant to a CERCLA, RCRA, or State remedial action are not considered construction, reconstruction, or modification for purposes of this subpart.

[61 FR 9919, Mar. 12, 1996, as amended at 63 FR 32750, June 16, 1998]

§ 60.751 Definitions.

As used in this subpart, all terms not defined herein shall have the meaning given them in the Act or in subpart A of this part.

Active collection system means a gas collection system that uses gas mover equipment.

Active landfill means a landfill in which solid waste is being placed or a landfill that is planned to accept waste in the future.

Closed landfill means a landfill in which solid waste is no longer being placed, and in which no additional solid wastes will be placed without first filing a notification of modification as prescribed under § 60.7(a)(4). Once a notification of modification has been filed, and additional solid waste is placed in the landfill, the landfill is no longer closed.

Closure means that point in time when a landfill becomes a closed landfill.

Commercial solid waste means all types of solid waste generated by stores, offices, restaurants, warehouses, and other nonmanufacturing activities, excluding residential and industrial wastes.

Controlled landfill means any landfill at which collection and control systems are required under this subpart as a result of the nonmethane organic compounds emission rate. The landfill is considered controlled at the time a collection and control system design plan is submitted in compliance with § 60.752(b)(2)(i).

Design capacity means the maximum amount of solid waste a landfill can accept, as indicated in terms of volume or mass in the most recent permit issued by the State, local, or Tribal agency responsible for regulating the landfill, plus any in-place waste not accounted for in the most recent permit. If the owner or operator chooses to convert the design capacity from volume to mass or from mass to volume to demonstrate its design capacity is less than 2.5 million megagrams or 2.5 million cubic meters, the calculation must include a site specific density, which must be recalculated annually.

Disposal facility means all contiguous land and structures, other appurtenances, and improvements on the

land used for the disposal of solid waste.

Emission rate cutoff means the threshold annual emission rate to which a landfill compares its estimated emission rate to determine if control under the regulation is required.

Enclosed combustor means an enclosed firebox which maintains a relatively constant limited peak temperature generally using a limited supply of combustion air. An enclosed flare is considered an enclosed combustor.

Flare means an open combustor without enclosure or shroud.

Gas mover equipment means the equipment (i.e., fan, blower, compressor) used to transport landfill gas through the header system.

Household waste means any solid waste (including garbage, trash, and sanitary waste in septic tanks) derived from households (including, but not limited to, single and multiple residences, hotels and motels, bunkhouses, ranger stations, crew quarters, campgrounds, picnic grounds, and day-use recreation areas).

Industrial solid waste means solid waste generated by manufacturing or industrial processes that is not a hazardous waste regulated under Subtitle C of the Resource Conservation and Recovery Act, parts 264 and 265 of this title. Such waste may include, but is not limited to, waste resulting from the following manufacturing processes: electric power generation; fertilizer/agricultural chemicals; food and related products/by-products; inorganic chemicals; iron and steel manufacturing; leather and leather products; nonferrous metals manufacturing/foundries; organic chemicals; plastics and resins manufacturing; pulp and paper industry; rubber and miscellaneous plastic products; stone, glass, clay, and concrete products; textile manufacturing; transportation equipment; and water treatment. This term does not include mining waste or oil and gas waste.

Interior well means any well or similar collection component located inside the perimeter of the landfill waste. A perimeter well located outside the landfilled waste is not an interior well.

Landfill means an area of land or an excavation in which wastes are placed for permanent disposal, and that is not a land application unit, surface impoundment, injection well, or waste pile as those terms are defined under § 257.2 of this title.

Lateral expansion means a horizontal expansion of the waste boundaries of an existing MSW landfill. A lateral expansion is not a modification unless it results in an increase in the design capacity of the landfill.

Modification means an increase in the permitted volume design capacity of the landfill by either horizontal or vertical expansion based on its permitted design capacity as of May 30, 1991. Modification does not occur until the owner or operator commences construction on the horizontal or vertical expansion.

Municipal solid waste landfill or *MSW landfill* means an entire disposal facility in a contiguous geographical space where household waste is placed in or on land. An MSW landfill may also receive other types of RCRA Subtitle D wastes (§ 257.2 of this title) such as commercial solid waste, nonhazardous sludge, conditionally exempt small quantity generator waste, and industrial solid waste. Portions of an MSW landfill may be separated by access roads. An MSW landfill may be publicly or privately owned. An MSW landfill may be a new MSW landfill, an existing MSW landfill, or a lateral expansion.

Municipal solid waste landfill emissions or *MSW landfill emissions* means gas generated by the decomposition of organic waste deposited in an MSW landfill or derived from the evolution of organic compounds in the waste.

NMOC means nonmethane organic compounds, as measured according to the provisions of § 60.754.

Nondegradable waste means any waste that does not decompose through chemical breakdown or microbiological activity. Examples are, but are not limited to, concrete, municipal waste combustor ash, and metals.

Passive collection system means a gas collection system that solely uses positive pressure within the landfill to move the gas rather than using gas mover equipment.

Sludge means any solid, semisolid, or liquid waste generated from a municipal, commercial, or industrial wastewater treatment plant, water supply treatment plant, or air pollution control facility, exclusive of the treated effluent from a wastewater treatment plant.

Solid waste means any garbage, sludge from a wastewater treatment plant, water supply treatment plant, or air pollution control facility and other discarded material, including solid, liquid, semisolid, or contained gaseous material resulting from industrial, commercial, mining, and agricultural operations, and from community activities, but does not include solid or dissolved material in domestic sewage, or solid or dissolved materials in irrigation return flows or industrial discharges that are point sources subject to permits under 33 U.S.C. 1342, or source, special nuclear, or by-product material as defined by the Atomic Energy Act of 1954, as amended (42 U.S.C 2011 et seq.).

Sufficient density means any number, spacing, and combination of collection system components, including vertical wells, horizontal collectors, and surface collectors, necessary to maintain emission and migration control as determined by measures of performance set forth in this part.

Sufficient extraction rate means a rate sufficient to maintain a negative pressure at all wellheads in the collection system without causing air infiltration, including any wellheads connected to the system as a result of expansion or excess surface emissions, for the life of the blower.

[61 FR 9919, Mar. 12, 1996, as amended at 63 FR 32750, June 16, 1998; 64 FR 9262, Feb. 24, 1999]

§ 60.752 Standards for air emissions from municipal solid waste landfills.

(a) Each owner or operator of an MSW landfill having a design capacity less than 2.5 million megagrams by mass or 2.5 million cubic meters by volume shall submit an initial design capacity report to the Administrator as provided in § 60.757(a). The landfill may calculate design capacity in either megagrams or cubic meters for comparison with the exemption values. Any density conversions shall be documented and submitted with the report. Submittal of the initial design capacity report shall fulfill the requirements of this subpart except as provided for in paragraphs (a)(1) and (a)(2) of this section.

(1) The owner or operator shall submit to the Administrator an amended design capacity report, as provided for in § 60.757(a)(3).

(2) When an increase in the maximum design capacity of a landfill exempted from the provisions of § 60.752(b) through § 60.759 of this subpart on the basis of the design capacity exemption in paragraph (a) of this section results in a revised maximum design capacity equal to or greater than 2.5 million megagrams and 2.5 million cubic meters, the owner or operator shall comply with the provision of paragraph (b) of this section.

(b) Each owner or operator of an MSW landfill having a design capacity equal to or greater than 2.5 million megagrams and 2.5 million cubic meters, shall either comply with paragraph (b)(2) of this section or calculate an NMOC emission rate for the landfill using the procedures specified in § 60.754. The NMOC emission rate shall be recalculated annually, except as provided in § 60.757(b)(1)(ii) of this subpart. The owner or operator of an MSW landfill subject to this subpart with a design capacity greater than or equal to 2.5 million megagrams and 2.5 million cubic meters is subject to part 70 or 71 permitting requirements.

(1) If the calculated NMOC emission rate is less than 50 megagrams per year, the owner or operator shall:

(i) Submit an annual emission report to the Administrator, except as provided for in § 60.757(b)(1)(ii); and

(ii) Recalculate the NMOC emission rate annually using the procedures specified in § 60.754(a)(1) until such time as the calculated NMOC emission rate is equal to or greater than 50 megagrams per year, or the landfill is closed.

(A) If the NMOC emission rate, upon recalculation required in paragraph (b)(1)(ii) of this section, is equal to or greater than 50 megagrams per year, the owner or operator shall install a

collection and control system in compliance with paragraph (b)(2) of this section.

(B) If the landfill is permanently closed, a closure notification shall be submitted to the Administrator as provided for in § 60.757(d).

(2) If the calculated NMOC emission rate is equal to or greater than 50 megagrams per year, the owner or operator shall:

(i) Submit a collection and control system design plan prepared by a professional engineer to the Administrator within 1 year:

(A) The collection and control system as described in the plan shall meet the design requirements of paragraph (b)(2)(ii) of this section.

(B) The collection and control system design plan shall include any alternatives to the operational standards, test methods, procedures, compliance measures, monitoring, recordkeeping or reporting provisions of §§ 60.753 through 60.758 proposed by the owner or operator.

(C) The collection and control system design plan shall either conform with specifications for active collection systems in § 60.759 or include a demonstration to the Administrator's satisfaction of the sufficiency of the alternative provisions to § 60.759.

(D) The Administrator shall review the information submitted under paragraphs (b)(2)(i) (A),(B) and (C) of this section and either approve it, disapprove it, or request that additional information be submitted. Because of the many site-specific factors involved with landfill gas system design, alternative systems may be necessary. A wide variety of system designs are possible, such as vertical wells, combination horizontal and vertical collection systems, or horizontal trenches only, leachate collection components, and passive systems.

(ii) Install a collection and control system that captures the gas generated within the landfill as required by paragraphs (b)(2)(ii)(A) or (B) and (b)(2)(iii) of this section within 30 months after the first annual report in which the emission rate equals or exceeds 50 megagrams per year, unless Tier 2 or Tier 3 sampling demonstrates that the emission rate is less than 50 megagrams per year, as specified in § 60.757(c)(1) or (2).

(iii) Route all the collected gas to a control system that complies with the requirements in either paragraph (b)(2)(iii) (A), (B) or (C) of this section.

(A) An open flare designed and operated in accordance with § 60.18;

(B) A control system designed and operated to reduce NMOC by 98 weight-percent, or, when an enclosed combustion device is used for control, to either reduce NMOC by 98 weight percent or reduce the outlet NMOC concentration to less than 20 parts per million by volume, dry basis as hexane at 3 percent oxygen. The reduction efficiency or parts per million by volume shall be established by an initial performance test to be completed no later than 180 days after the initial startup of the approved control system using the test methods specified in § 60.754(d).

(C) Route the collected gas to a treatment system that processes the collected gas for subsequent sale or use. All emissions from any atmospheric vent from the gas treatment system shall be subject to the requirements of paragraph (b)(2)(iii) (A) or (B) of this section.

(iv) Operate the collection and control device installed to comply with this subpart in accordance with the provisions of §§ 60.753, 60.755 and 60.756.

(v) The collection and control system may be capped or removed provided that all the conditions of paragraphs (b)(2)(v) (A), (B), and (C) of this section are met:

(A) The landfill shall be a closed landfill as defined in § 60.751 of this subpart. A closure report shall be submitted to the Administrator as provided in § 60.757(d);

(B) The collection and control system shall have been in operation a minimum of 15 years; and

(C) Following the procedures specified in § 60.754(b) of this subpart, the calculated NMOC gas produced by the landfill shall be less than 50 megagrams per year on three successive test dates. The test dates shall be no less than 90 days apart, and no more than 180 days apart.

(c) For purposes of obtaining an operating permit under title V of the Act,

the owner or operator of a MSW landfill subject to this subpart with a design capacity less than 2.5 million megagrams or 2.5 million cubic meters is not subject to the requirement to obtain an operating permit for the landfill under part 70 or 71 of this chapter, unless the landfill is otherwise subject to either part 70 or 71. For purposes of submitting a timely application for an operating permit under part 70 or 71, the owner or operator of a MSW landfill subject to this subpart with a design capacity greater than or equal to 2.5 million megagrams and 2.5 million cubic meters, and not otherwise subject to either part 70 or 71, becomes subject to the requirements of §§ 70.5(a)(1)(i) or 71.5(a)(1)(i) of this chapter, regardless of when the design capacity report is actually submitted, no later than:

(1) June 10, 1996 for MSW landfills that commenced construction, modification, or reconstruction on or after May 30, 1991 but before March 12, 1996;

(2) Ninety days after the date of commenced construction, modification, or reconstruction for MSW landfills that commence construction, modification, or reconstruction on or after March 12, 1996.

(d) When a MSW landfill subject to this subpart is closed, the owner or operator is no longer subject to the requirement to maintain an operating permit under part 70 or 71 of this chapter for the landfill if the landfill is not otherwise subject to the requirements of either part 70 or 71 and if either of the following conditions are met:

(1) The landfill was never subject to the requirement for a control system under paragraph (b)(2) of this section; or

(2) The owner or operator meets the conditions for control system removal specified in paragraph (b)(2)(v) of this section.

[61 FR 9919, Mar. 12, 1996, as amended at 63 FR 32751, June 16, 1998]

§ 60.753 Operational standards for collection and control systems.

Each owner or operator of an MSW landfill with a gas collection and control system used to comply with the provisions of § 60.752(b)(2)(ii) of this subpart shall:

(a) Operate the collection system such that gas is collected from each area, cell, or group of cells in the MSW landfill in which solid waste has been in place for:

(1) 5 years or more if active; or

(2) 2 years or more if closed or at final grade;

(b) Operate the collection system with negative pressure at each wellhead except under the following conditions:

(1) A fire or increased well temperature. The owner or operator shall record instances when positive pressure occurs in efforts to avoid a fire. These records shall be submitted with the annual reports as provided in § 60.757(f)(1);

(2) Use of a geomembrane or synthetic cover. The owner or operator shall develop acceptable pressure limits in the design plan;

(3) A decommissioned well. A well may experience a static positive pressure after shut down to accommodate for declining flows. All design changes shall be approved by the Administrator;

(c) Operate each interior wellhead in the collection system with a landfill gas temperature less than 55 ° C and with either a nitrogen level less than 20 percent or an oxygen level less than 5 percent. The owner or operator may establish a higher operating temperature, nitrogen, or oxygen value at a particular well. A higher operating value demonstration shall show supporting data that the elevated parameter does not cause fires or significantly inhibit anaerobic decomposition by killing methanogens.

(1) The nitrogen level shall be determined using Method 3C, unless an alternative test method is established as allowed by § 60.752(b)(2)(i) of this subpart.

(2) Unless an alternative test method is established as allowed by § 60.752(b)(2)(i) of this subpart, the oxygen shall be determined by an oxygen meter using Method 3A except that:

(i) The span shall be set so that the regulatory limit is between 20 and 50 percent of the span;

(ii) A data recorder is not required;

(iii) Only two calibration gases are required, a zero and span, and ambient air may be used as the span;

(iv) A calibration error check is not required;

(v) The allowable sample bias, zero drift, and calibration drift are ±10 percent.

(d) Operate the collection system so that the methane concentration is less than 500 parts per million above background at the surface of the landfill. To determine if this level is exceeded, the owner or operator shall conduct surface testing around the perimeter of the collection area and along a pattern that traverses the landfill at 30 meter intervals and where visual observations indicate elevated concentrations of landfill gas, such as distressed vegetation and cracks or seeps in the cover. The owner or operator may establish an alternative traversing pattern that ensures equivalent coverage. A surface monitoring design plan shall be developed that includes a topographical map with the monitoring route and the rationale for any site-specific deviations from the 30 meter intervals. Areas with steep slopes or other dangerous areas may be excluded from the surface testing.

(e) Operate the system such that all collected gases are vented to a control system designed and operated in compliance with §60.752(b)(2)(iii). In the event the collection or control system is inoperable, the gas mover system shall be shut down and all valves in the collection and control system contributing to venting of the gas to the atmosphere shall be closed within 1 hour; and

(f) Operate the control or treatment system at all times when the collected gas is routed to the system.

(g) If monitoring demonstrates that the operational requirements in paragraphs (b), (c), or (d) of this section are not met, corrective action shall be taken as specified in §60.755(a)(3) through (5) or §60.755(c) of this subpart. If corrective actions are taken as specified in §60.755, the monitored exceedance is not a violation of the operational requirements in this section.

[61 FR 9919, Mar. 12, 1996, as amended at 63 FR 32751, June 16, 1998]

§60.754 Test methods and procedures.

(a)(1) The landfill owner or operator shall calculate the NMOC emission rate using either the equation provided in paragraph (a)(1)(i) of this section or the equation provided in paragraph (a)(1)(ii) of this section. Both equations may be used if the actual year-to-year solid waste acceptance rate is known, as specified in paragraph (a)(1)(i), for part of the life of the landfill and the actual year-to-year solid waste acceptance rate is unknown, as specified in paragraph (a)(1)(ii), for part of the life of the landfill. The values to be used in both equations are 0.05 per year for k, 170 cubic meters per megagram for L_O, and 4,000 parts per million by volume as hexane for the C_{NMOC}. For landfills located in geographical areas with a thirty year annual average precipitation of less than 25 inches, as measured at the nearest representative official meteorologic site, the k value to be used is 0.02 per year.

(i) The following equation shall be used if the actual year-to-year solid waste acceptance rate is known.

$$M_{NMOC} = \sum_{i=1}^{n} 2\,k\,L_o M_i \left(e^{-kt}i\right)\left(C_{NM}OC\right)\left(3.6\times10^{-}9\right)$$

where,

M_{NMOC}=Total NMOC emission rate from the landfill, megagrams per year

k=methane generation rate constant, $year^{-1}$

L_o=methane generation potential, cubic meters per megagram solid waste

M_i=mass of solid waste in the ith section, megagrams

t_i=age of the ith section, years

C_{NMOC}=concentration of NMOC, parts per million by volume as hexane

3.6×10^{-9}=conversion factor

The mass of nondegradable solid waste may be subtracted from the total mass of solid waste in a particular section of the landfill when calculating the value for M_i if documentation of the nature and amount of such wastes is maintained

(ii) The following equation shall be used if the actual year-to-year solid waste acceptance rate is unknown.

$M_{NMOC}=2L_o\ R\ (e^{-kc}-e^{-k\ t})\ (C_{NM}\ OC)\ (3.6\times 10^{-9})$

where,

M_{NMOC}=mass emission rate of NMOC, megagrams per year

L_o=methane generation potential, cubic meters per megagram solid waste

R=average annual acceptance rate, megagrams per year

k=methane generation rate constant, $year^{-1}$

t=age of landfill, years

C_{NMOC}=concentration of NMOC, parts per million by volume as hexane

c=time since closure, years. For active landfill c = O and $e^{-kc}=1$

3.6×10^{-9}=conversion factor

The mass of nondegradable solid waste may be subtracted from the average annual acceptance rate when calculating a value for R, if documentation of the nature and amount of such wastes is maintained.

(2) *Tier 1.* The owner or operator shall compare the calculated NMOC mass emission rate to the standard of 50 megagrams per year.

(i) If the NMOC emission rate calculated in paragraph (a)(1) of this section is less than 50 megagrams per year, then the landfill owner shall submit an emission rate report as provided in §60.757(b)(1), and shall recalculate the NMOC mass emission rate annually as required under §60.752(b)(1).

(ii) If the calculated NMOC emission rate is equal to or greater than 50 megagrams per year, then the landfill owner shall either comply with §60.752(b)(2), or determine a site-specific NMOC concentration and recalculate the NMOC emission rate using the procedures provided in paragraph (a)(3) of this section.

(3) *Tier 2.* The landfill owner or operator shall determine the NMOC concentration using the following sampling procedure. The landfill owner or operator shall install at least two sample probes per hectare of landfill surface that has retained waste for at least 2 years. If the landfill is larger than 25 hectares in area, only 50 samples are required. The sample probes should be located to avoid known areas of nondegradable solid waste. The owner or operator shall collect and analyze one sample of landfill gas from each probe to determine the NMOC concentration using Method 25C of appendix A of this part or Method 18 of appendix A of this part. If using Method 18 of appendix A of this part, the minimum list of compounds to be tested shall be those published in the most recent Compilation of Air Pollutant Emission Factors (AP–42). If composite sampling is used, equal volumes shall be taken from each sample probe. If more than the required number of samples are taken, all samples shall be used in the analysis. The landfill owner or operator shall divide the NMOC concentration from Method 25C of appendix A of this part by six to convert from C_{NMOC} as carbon to C_{NM} OC as hexane.

(i) The landfill owner or operator shall recalculate the NMOC mass emission rate using the equations provided in paragraph (a)(1)(i) or (a)(1)(ii) of this section and using the average NMOC concentration from the collected samples instead of the default value in the equation provided in paragraph (a)(1) of this section.

(ii) If the resulting mass emission rate calculated using the site-specific NMOC concentration is equal to or greater than 50 megagrams per year, then the landfill owner or operator shall either comply with §60.752(b)(2), or determine the site-specific methane generation rate constant and recalculate the NMOC emission rate using the site-specific methane generation rate using the procedure specified in paragraph (a)(4) of this section.

(iii) If the resulting NMOC mass emission rate is less than 50 megagrams per year, the owner or operator shall submit a periodic estimate of the emission rate report as provided in §60.757(b)(1) and retest the site-specific NMOC concentration every 5 years using the methods specified in this section.

(4) *Tier 3.* The site-specific methane generation rate constant shall be determined using the procedures provided in Method 2E of appendix A of this part. The landfill owner or operator shall estimate the NMOC mass emission rate using equations in paragraph (a)(1)(i) or (a)(1)(ii) of this section and

using a site-specific methane generation rate constant k, and the site-specific NMOC concentration as determined in paragraph (a)(3) of this section instead of the default values provided in paragraph (a)(1) of this section. The landfill owner or operator shall compare the resulting NMOC mass emission rate to the standard of 50 megagrams per year.

(i) If the NMOC mass emission rate as calculated using the site-specific methane generation rate and concentration of NMOC is equal to or greater than 50 megagrams per year, the owner or operator shall comply with § 60.752(b)(2).

(ii) If the NMOC mass emission rate is less than 50 megagrams per year, then the owner or operator shall submit a periodic emission rate report as provided in § 60.757(b)(1) and shall recalculate the NMOC mass emission rate annually, as provided in § 60.757(b)(1) using the equations in paragraph (a)(1) of this section and using the site-specific methane generation rate constant and NMOC concentration obtained in paragraph (a)(3) of this section. The calculation of the methane generation rate constant is performed only once, and the value obtained from this test shall be used in all subsequent annual NMOC emission rate calculations.

(5) The owner or operator may use other methods to determine the NMOC concentration or a site-specific k as an alternative to the methods required in paragraphs (a)(3) and (a)(4) of this section if the method has been approved by the Administrator.

(b) After the installation of a collection and control system in compliance with § 60.755, the owner or operator shall calculate the NMOC emission rate for purposes of determining when the system can be removed as provided in § 60.752(b)(2)(v), using the following equation:

$$M_{NMOC} = 1.89 \times 10^{-3} Q_{LFG} C_{NMOC}$$

where,

M_{NMOC} = mass emission rate of NMOC, megagrams per year

Q_{LFG} = flow rate of landfill gas, cubic meters per minute

C_{NMOC} = NMOC concentration, parts per million by volume as hexane

(1) The flow rate of landfill gas, Q_{LFG}, shall be determined by measuring the total landfill gas flow rate at the common header pipe that leads to the control device using a gas flow measuring device calibrated according to the provisions of section 4 of Method 2E of appendix A of this part.

(2) The average NMOC concentration, C_{NMOC}, shall be determined by collecting and analyzing landfill gas sampled from the common header pipe before the gas moving or condensate removal equipment using the procedures in Method 25C or Method 18 of appendix A of this part. If using Method 18 of appendix A of this part, the minimum list of compounds to be tested shall be those published in the most recent Compilation of Air Pollutant Emission Factors (AP–42). The sample location on the common header pipe shall be before any condensate removal or other gas refining units. The landfill owner or operator shall divide the NMOC concentration from Method 25C of appendix A of this part by six to convert from C_{NMOC} as carbon to C_{NMOC} as hexane.

(3) The owner or operator may use another method to determine landfill gas flow rate and NMOC concentration if the method has been approved by the Administrator.

(c) When calculating emissions for PSD purposes, the owner or operator of each MSW landfill subject to the provisions of this subpart shall estimate the NMOC emission rate for comparison to the PSD major source and significance levels in §§ 51.166 or 52.21 of this chapter using AP–42 or other approved measurement procedures.

(d) For the performance test required in § 60.752(b)(2)(iii)(B), Method 25C or Method 18 of appendix A of this part shall be used to determine compliance with 98 weight-percent efficiency or the 20 ppmv outlet concentration level, unless another method to demonstrate compliance has been approved by the Administrator as provided by § 60.752(b)(2)(i)(B). If using Method 18 of appendix A of this part, the minimum list of compounds to be tested shall be those published in the most recent Compilation of Air Pollutant Emission Factors (AP–42). The following equation shall be used to calculate efficiency:

$$\text{Control Efficiency} = (NMOC_{in} - NMOC_{out})/(NMOC_{in})$$

where,

$NMOC_{in}$ = mass of NMOC entering control device

$NMOC_{out}$ = mass of NMOC exiting control device

[61 FR 9919, Mar. 12, 1996, as amended at 63 FR 32751, June 16, 1998]

§ 60.755 Compliance provisions.

(a) Except as provided in § 60.752(b)(2)(i)(B), the specified methods in paragraphs (a)(1) through (a)(6) of this section shall be used to determine whether the gas collection system is in compliance with § 60.752(b)(2)(ii).

(1) For the purposes of calculating the maximum expected gas generation flow rate from the landfill to determine compliance with § 60.752(b)(2)(ii)(A)(*1*), one of the following equations shall be used. The k and L_o kinetic factors should be those published in the most recent Compilation of Air Pollutant Emission Factors (AP–42) or other site specific values demonstrated to be appropriate and approved by the Administrator. If k has been determined as specified in § 60.754(a)(4), the value of k determined from the test shall be used. A value of no more than 15 years shall be used for the intended use period of the gas mover equipment. The active life of the landfill is the age of the landfill plus the estimated number of years until closure.

(i) For sites with unknown year-to-year solid waste acceptance rate:

$$Q_m = 2L_o R (e^{-kc} - e^{-kt})$$

where,

Q_m = maximum expected gas generation flow rate, cubic meters per year

L_o = methane generation potential, cubic meters per megagram solid waste

R = average annual acceptance rate, megagrams per year

k = methane generation rate constant, $year^{-1}$

t = age of the landfill at equipment installation plus the time the owner or operator intends to use the gas mover equipment or active life of the landfill, whichever is less. If the equipment is installed after closure, t is the age of the landfill at installation, years

c = time since closure, years (for an active landfill c = O and $e^{-kc} = 1$)

(ii) For sites with known year-to-year solid waste acceptance rate:

$$Q_M = \sum_{i=1}^{n} 2 k L_o M_i \left(e^{-kt}i\right)$$

where,

Q_M=maximum expected gas generation flow rate, cubic meters per year

k=methane generation rate constant, $year^{-1}$

L_o=methane generation potential, cubic meters per megagram solid waste

M_i=mass of solid waste in the ith section, megagrams

t_i=age of the ith section, years

(iii) If a collection and control system has been installed, actual flow data may be used to project the maximum expected gas generation flow rate instead of, or in conjunction with, the equations in paragraphs (a)(1) (i) and (ii) of this section. If the landfill is still accepting waste, the actual measured flow data will not equal the maximum expected gas generation rate, so calculations using the equations in paragraphs (a)(1) (i) or (ii) or other methods shall be used to predict the maximum expected gas generation rate over the intended period of use of the gas control system equipment.

(2) For the purposes of determining sufficient density of gas collectors for compliance with § 60.752(b)(2)(ii)(A)(*2*), the owner or operator shall design a system of vertical wells, horizontal collectors, or other collection devices, satisfactory to the Administrator, capable of controlling and extracting gas from all portions of the landfill sufficient to meet all operational and performance standards.

(3) For the purpose of demonstrating whether the gas collection system flow rate is sufficient to determine compliance with § 60.752(b)(2)(ii)(A)(*3*), the owner or operator shall measure gauge pressure in the gas collection header at each individual well, monthly. If a positive pressure exists, action shall be initiated to correct the exceedance within 5 calendar days, except for the three conditions allowed under § 60.753(b). If negative pressure cannot be achieved without excess air infiltration within 15 calendar days of the first measurement, the gas collection system shall be expanded to correct the exceedance within 120 days of the initial measurement of positive pressure. Any attempted corrective measure shall not cause exceedances of other

operational or performance standards. An alternative timeline for correcting the exceedance may be submitted to the Administrator for approval.

(4) Owners or operators are not required to expand the system as required in paragraph (a)(3) of this section during the first 180 days after gas collection system startup.

(5) For the purpose of identifying whether excess air infiltration into the landfill is occurring, the owner or operator shall monitor each well monthly for temperature and nitrogen or oxygen as provided in §60.753(c). If a well exceeds one of these operating parameters, action shall be initiated to correct the exceedance within 5 calendar days. If correction of the exceedance cannot be achieved within 15 calendar days of the first measurement, the gas collection system shall be expanded to correct the exceedance within 120 days of the initial exceedance. Any attempted corrective measure shall not cause exceedances of other operational or performance standards. An alternative timeline for correcting the exceedance may be submitted to the Administrator for approval.

(6) An owner or operator seeking to demonstrate compliance with §60.752(b)(2)(ii)(A)(*4*) through the use of a collection system not conforming to the specifications provided in §60.759 shall provide information satisfactory to the Administrator as specified in §60.752(b)(2)(i)(C) demonstrating that off-site migration is being controlled.

(b) For purposes of compliance with §60.753(a), each owner or operator of a controlled landfill shall place each well or design component as specified in the approved design plan as provided in §60.752(b)(2)(i). Each well shall be installed no later than 60 days after the date on which the initial solid waste has been in place for a period of:

(1) 5 years or more if active; or

(2) 2 years or more if closed or at final grade.

(c) The following procedures shall be used for compliance with the surface methane operational standard as provided in §60.753(d).

(1) After installation of the collection system, the owner or operator shall monitor surface concentrations of methane along the entire perimeter of the collection area and along a pattern that traverses the landfill at 30 meter intervals (or a site-specific established spacing) for each collection area on a quarterly basis using an organic vapor analyzer, flame ionization detector, or other portable monitor meeting the specifications provided in paragraph (d) of this section.

(2) The background concentration shall be determined by moving the probe inlet upwind and downwind outside the boundary of the landfill at a distance of at least 30 meters from the perimeter wells.

(3) Surface emission monitoring shall be performed in accordance with section 4.3.1 of Method 21 of appendix A of this part, except that the probe inlet shall be placed within 5 to 10 centimeters of the ground. Monitoring shall be performed during typical meteorological conditions.

(4) Any reading of 500 parts per million or more above background at any location shall be recorded as a monitored exceedance and the actions specified in paragraphs (c)(4) (i) through (v) of this section shall be taken. As long as the specified actions are taken, the exceedance is not a violation of the operational requirements of §60.753(d).

(i) The location of each monitored exceedance shall be marked and the location recorded.

(ii) Cover maintenance or adjustments to the vacuum of the adjacent wells to increase the gas collection in the vicinity of each exceedance shall be made and the location shall be re-monitored within 10 calendar days of detecting the exceedance.

(iii) If the re-monitoring of the location shows a second exceedance, additional corrective action shall be taken and the location shall be monitored again within 10 days of the second exceedance. If the re-monitoring shows a third exceedance for the same location, the action specified in paragraph (c)(4)(v) of this section shall be taken, and no further monitoring of that location is required until the action specified in paragraph (c)(4)(v) has been taken.

(iv) Any location that initially showed an exceedance but has a methane concentration less than 500 ppm methane above background at the 10-

day re-monitoring specified in paragraph (c)(4) (ii) or (iii) of this section shall be re-monitored 1 month from the initial exceedance. If the 1-month re-monitoring shows a concentration less than 500 parts per million above background, no further monitoring of that location is required until the next quarterly monitoring period. If the 1-month remonitoring shows an exceedance, the actions specified in paragraph (c)(4) (iii) or (v) shall be taken.

(v) For any location where monitored methane concentration equals or exceeds 500 parts per million above background three times within a quarterly period, a new well or other collection device shall be installed within 120 calendar days of the initial exceedance. An alternative remedy to the exceedance, such as upgrading the blower, header pipes or control device, and a corresponding timeline for installation may be submitted to the Administrator for approval.

(5) The owner or operator shall implement a program to monitor for cover integrity and implement cover repairs as necessary on a monthly basis.

(d) Each owner or operator seeking to comply with the provisions in paragraph (c) of this section shall comply with the following instrumentation specifications and procedures for surface emission monitoring devices:

(1) The portable analyzer shall meet the instrument specifications provided in section 3 of Method 21 of appendix A of this part, except that ''methane'' shall replace all references to VOC.

(2) The calibration gas shall be methane, diluted to a nominal concentration of 500 parts per million in air.

(3) To meet the performance evaluation requirements in section 3.1.3 of Method 21 of appendix A of this part, the instrument evaluation procedures of section 4.4 of Method 21 of appendix A of this part shall be used.

(4) The calibration procedures provided in section 4.2 of Method 21 of appendix A of this part shall be followed immediately before commencing a surface monitoring survey.

(e) The provisions of this subpart apply at all times, except during periods of start-up, shutdown, or malfunction, provided that the duration of start-up, shutdown, or malfunction shall not exceed 5 days for collection systems and shall not exceed 1 hour for treatment or control devices.

[61 FR 9919, Mar. 12, 1996, as amended at 63 FR 32752, June 16, 1998]

§ 60.756 Monitoring of operations.

Except as provided in § 60.752(b)(2)(i)(B),

(a) Each owner or operator seeking to comply with § 60.752(b)(2)(ii)(A) for an active gas collection system shall install a sampling port and a thermometer other temperature measuring device, or an access port for temperature measurements at each wellhead and:

(1) Measure the gauge pressure in the gas collection header on a monthly basis as provided in § 60.755(a)(3); and

(2) Monitor nitrogen or oxygen concentration in the landfill gas on a monthly basis as provided in § 60.755(a)(5); and

(3) Monitor temperature of the landfill gas on a monthly basis as provided in § 60.755(a)(5).

(b) Each owner or operator seeking to comply with § 60.752(b)(2)(iii) using an enclosed combustor shall calibrate, maintain, and operate according to the manufacturer's specifications, the following equipment.

(1) A temperature monitoring device equipped with a continuous recorder and having a minimum accuracy of ±1 percent of the temperature being measured expressed in degrees Celsius or ±0.5 °C, whichever is greater. A temperature monitoring device is not required for boilers or process heaters with design heat input capacity greater than 44 megawatts.

(2) A device that records flow to or bypass of the control device. The owner or operator shall either:

(i) Install, calibrate, and maintain a gas flow rate measuring device that shall record the flow to the control device at least every 15 minutes; or

(ii) Secure the bypass line valve in the closed position with a car-seal or a lock-and-key type configuration. A visual inspection of the seal or closure mechanism shall be performed at least once every month to ensure that the valve is maintained in the closed position and that the gas flow is not diverted through the bypass line.

(c) Each owner or operator seeking to comply with §60.752(b)(2)(iii) using an open flare shall install, calibrate, maintain, and operate according to the manufacturer's specifications the following equipment:

(1) A heat sensing device, such as an ultraviolet beam sensor or thermocouple, at the pilot light or the flame itself to indicate the continuous presence of a flame.

(2) A device that records flow to or bypass of the flare. The owner or operator shall either:

(i) Install, calibrate, and maintain a gas flow rate measuring device that shall record the flow to the control device at least every 15 minutes; or

(ii) Secure the bypass line valve in the closed position with a car-seal or a lock-and-key type configuration. A visual inspection of the seal or closure mechanism shall be performed at least once every month to ensure that the valve is maintained in the closed position and that the gas flow is not diverted through the bypass line.

(d) Each owner or operator seeking to demonstrate compliance with §60.752(b)(2)(iii) using a device other than an open flare or an enclosed combustor shall provide information satisfactory to the Administrator as provided in §60.752(b)(2)(i)(B) describing the operation of the control device, the operating parameters that would indicate proper performance, and appropriate monitoring procedures. The Administrator shall review the information and either approve it, or request that additional information be submitted. The Administrator may specify additional appropriate monitoring procedures.

(e) Each owner or operator seeking to install a collection system that does not meet the specifications in §60.759 or seeking to monitor alternative parameters to those required by §60.753 through §60.756 shall provide information satisfactory to the Administrator as provided in §60.752(b)(2)(i) (B) and (C) describing the design and operation of the collection system, the operating parameters that would indicate proper performance, and appropriate monitoring procedures. The Administrator may specify additional appropriate monitoring procedures.

(f) Each owner or operator seeking to demonstrate compliance with §60.755(c), shall monitor surface concentrations of methane according to the instrument specifications and procedures provided in §60.755(d). Any closed landfill that has no monitored exceedances of the operational standard in three consecutive quarterly monitoring periods may skip to annual monitoring. Any methane reading of 500 ppm or more above background detected during the annual monitoring returns the frequency for that landfill to quarterly monitoring.

[61 FR 9919, Mar. 12, 1996, as amended at 63 FR 32752, June 16, 1998]

§ 60.757 Reporting requirements.

Except as provided in §60.752(b)(2)(i)(B),

(a) Each owner or operator subject to the requirements of this subpart shall submit an initial design capacity report to the Administrator.

(1) The initial design capacity report shall fulfill the requirements of the notification of the date construction is commenced as required by §60.7(a)(1) and shall be submitted no later than:

(i) June 10, 1996, for landfills that commenced construction, modification, or reconstruction on or after May 30, 1991 but before March 12, 1996 or

(ii) Ninety days after the date of commenced construction, modification, or reconstruction for landfills that commence construction, modification, or reconstruction on or after March 12, 1996.

(2) The initial design capacity report shall contain the following information:

(i) A map or plot of the landfill, providing the size and location of the landfill, and identifying all areas where solid waste may be landfilled according to the permit issued by the State, local, or tribal agency responsible for regulating the landfill.

(ii) The maximum design capacity of the landfill. Where the maximum design capacity is specified in the permit issued by the State, local, or tribal agency responsible for regulating the landfill, a copy of the permit specifying the maximum design capacity may be submitted as part of the report. If the

maximum design capacity of the landfill is not specified in the permit, the maximum design capacity shall be calculated using good engineering practices. The calculations shall be provided, along with the relevant parameters as part of the report. The State, Tribal, local agency or Administrator may request other reasonable information as may be necessary to verify the maximum design capacity of the landfill.

(3) An amended design capacity report shall be submitted to the Administrator providing notification of an increase in the design capacity of the landfill, within 90 days of an increase in the maximum design capacity of the landfill to or above 2.5 million megagrams and 2.5 million cubic meters. This increase in design capacity may result from an increase in the permitted volume of the landfill or an increase in the density as documented in the annual recalculation required in §60.758(f).

(b) Each owner or operator subject to the requirements of this subpart shall submit an NMOC emission rate report to the Administrator initially and annually thereafter, except as provided for in paragraphs (b)(1)(ii) or (b)(3) of this section. The Administrator may request such additional information as may be necessary to verify the reported NMOC emission rate.

(1) The NMOC emission rate report shall contain an annual or 5-year estimate of the NMOC emission rate calculated using the formula and procedures provided in §60.754(a) or (b), as applicable.

(i) The initial NMOC emission rate report may be combined with the initial design capacity report required in paragraph (a) of this section and shall be submitted no later than indicated in paragraphs (b)(1)(i)(A) and (B) of this section. Subsequent NMOC emission rate reports shall be submitted annually thereafter, except as provided for in paragraphs (b)(1)(ii) and (b)(3) of this section.

(A) June 10, 1996, for landfills that commenced construction, modification, or reconstruction on or after May 30, 1991, but before March 12, 1996, or

(B) Ninety days after the date of commenced construction, modification, or reconstruction for landfills that commence construction, modification, or reconstruction on or after March 12, 1996.

(ii) If the estimated NMOC emission rate as reported in the annual report to the Administrator is less than 50 megagrams per year in each of the next 5 consecutive years, the owner or operator may elect to submit an estimate of the NMOC emission rate for the next 5-year period in lieu of the annual report. This estimate shall include the current amount of solid waste-in-place and the estimated waste acceptance rate for each year of the 5 years for which an NMOC emission rate is estimated. All data and calculations upon which this estimate is based shall be provided to the Administrator. This estimate shall be revised at least once every 5 years. If the actual waste acceptance rate exceeds the estimated waste acceptance rate in any year reported in the 5-year estimate, a revised 5-year estimate shall be submitted to the Administrator. The revised estimate shall cover the 5-year period beginning with the year in which the actual waste acceptance rate exceeded the estimated waste acceptance rate.

(2) The NMOC emission rate report shall include all the data, calculations, sample reports and measurements used to estimate the annual or 5-year emissions.

(3) Each owner or operator subject to the requirements of this subpart is exempted from the requirements of paragraphs (b)(1) and (2) of this section, after the installation of a collection and control system in compliance with §60.752(b)(2), during such time as the collection and control system is in operation and in compliance with §§60.753 and 60.755.

(c) Each owner or operator subject to the provisions of §60.752(b)(2)(i) shall submit a collection and control system design plan to the Administrator within 1 year of the first report, required under paragraph (b) of this section, in which the emission rate exceeds 50 megagrams per year, except as follows:

(1) If the owner or operator elects to recalculate the NMOC emission rate after Tier 2 NMOC sampling and analysis as provided in §60.754(a)(3) and the resulting rate is less than 50

megagrams per year, annual periodic reporting shall be resumed, using the Tier 2 determined site-specific NMOC concentration, until the calculated emission rate is equal to or greater than 50 megagrams per year or the landfill is closed. The revised NMOC emission rate report, with the recalculated emission rate based on NMOC sampling and analysis, shall be submitted within 180 days of the first calculated exceedance of 50 megagrams per year.

(2) If the owner or operator elects to recalculate the NMOC emission rate after determining a site-specific methane generation rate constant (k), as provided in Tier 3 in § 60.754(a)(4), and the resulting NMOC emission rate is less than 50 Mg/yr, annual periodic reporting shall be resumed. The resulting site-specific methane generation rate constant (k) shall be used in the emission rate calculation until such time as the emissions rate calculation results in an exceedance. The revised NMOC emission rate report based on the provisions of § 60.754(a)(4) and the resulting site-specific methane generation rate constant (k) shall be submitted to the Administrator within 1 year of the first calculated emission rate exceeding 50 megagrams per year.

(d) Each owner or operator of a controlled landfill shall submit a closure report to the Administrator within 30 days of waste acceptance cessation. The Administrator may request additional information as may be necessary to verify that permanent closure has taken place in accordance with the requirements of 40 CFR 258.60. If a closure report has been submitted to the Administrator, no additional wastes may be placed into the landfill without filing a notification of modification as described under § 60.7(a)(4).

(e) Each owner or operator of a controlled landfill shall submit an equipment removal report to the Administrator 30 days prior to removal or cessation of operation of the control equipment.

(1) The equipment removal report shall contain all of the following items:

(i) A copy of the closure report submitted in accordance with paragraph (d) of this section;

(ii) A copy of the initial performance test report demonstrating that the 15 year minimum control period has expired; and

(iii) Dated copies of three successive NMOC emission rate reports demonstrating that the landfill is no longer producing 50 megagrams or greater of NMOC per year.

(2) The Administrator may request such additional information as may be necessary to verify that all of the conditions for removal in § 60.752(b)(2)(v) have been met.

(f) Each owner or operator of a landfill seeking to comply with § 60.752(b)(2) using an active collection system designed in accordance with § 60.752(b)(2)(ii) shall submit to the Administrator annual reports of the recorded information in (f)(1) through (f)(6) of this paragraph. The initial annual report shall be submitted within 180 days of installation and start-up of the collection and control system, and shall include the initial performance test report required under § 60.8. For enclosed combustion devices and flares, reportable exceedances are defined under § 60.758(c).

(1) Value and length of time for exceedance of applicable parameters monitored under § 60.756(a), (b), (c), and (d).

(2) Description and duration of all periods when the gas stream is diverted from the control device through a bypass line or the indication of bypass flow as specified under § 60.756.

(3) Description and duration of all periods when the control device was not operating for a period exceeding 1 hour and length of time the control device was not operating.

(4) All periods when the collection system was not operating in excess of 5 days.

(5) The location of each exceedance of the 500 parts per million methane concentration as provided in § 60.753(d) and the concentration recorded at each location for which an exceedance was recorded in the previous month.

(6) The date of installation and the location of each well or collection system expansion added pursuant to paragraphs (a)(3), (b), and (c)(4) of § 60.755.

(g) Each owner or operator seeking to comply with §60.752(b)(2)(iii) shall include the following information with the initial performance test report required under §60.8:

(1) A diagram of the collection system showing collection system positioning including all wells, horizontal collectors, surface collectors, or other gas extraction devices, including the locations of any areas excluded from collection and the proposed sites for the future collection system expansion;

(2) The data upon which the sufficient density of wells, horizontal collectors, surface collectors, or other gas extraction devices and the gas mover equipment sizing are based;

(3) The documentation of the presence of asbestos or nondegradable material for each area from which collection wells have been excluded based on the presence of asbestos or nondegradable material;

(4) The sum of the gas generation flow rates for all areas from which collection wells have been excluded based on nonproductivity and the calculations of gas generation flow rate for each excluded area; and

(5) The provisions for increasing gas mover equipment capacity with increased gas generation flow rate, if the present gas mover equipment is inadequate to move the maximum flow rate expected over the life of the landfill; and

(6) The provisions for the control of off-site migration.

[61 FR 9919, Mar. 12, 1996, as amended at 63 FR 32752, June 16, 1998]

§60.758 Recordkeeping requirements.

(a) Except as provided in §60.752(b)(2)(i)(B), each owner or operator of an MSW landfill subject to the provisions of §60.752(b) shall keep for at least 5 years up-to-date, readily accessible, on-site records of the design capacity report which triggered §60.752(b), the current amount of solid waste in-place, and the year-by-year waste acceptance rate. Off-site records may be maintained if they are retrievable within 4 hours. Either paper copy or electronic formats are acceptable.

(b) Except as provided in §60.752(b)(2)(i)(B), each owner or operator of a controlled landfill shall keep up-to-date, readily accessible records for the life of the control equipment of the data listed in paragraphs (b)(1) through (b)(4) of this section as measured during the initial performance test or compliance determination. Records of subsequent tests or monitoring shall be maintained for a minimum of 5 years. Records of the control device vendor specifications shall be maintained until removal.

(1) Where an owner or operator subject to the provisions of this subpart seeks to demonstrate compliance with §60.752(b)(2)(ii):

(i) The maximum expected gas generation flow rate as calculated in §60.755(a)(1). The owner or operator may use another method to determine the maximum gas generation flow rate, if the method has been approved by the Administrator.

(ii) The density of wells, horizontal collectors, surface collectors, or other gas extraction devices determined using the procedures specified in §60.759(a)(1).

(2) Where an owner or operator subject to the provisions of this subpart seeks to demonstrate compliance with §60.752(b)(2)(iii) through use of an enclosed combustion device other than a boiler or process heater with a design heat input capacity greater than 44 megawatts:

(i) The average combustion temperature measured at least every 15 minutes and averaged over the same time period of the performance test.

(ii) The percent reduction of NMOC determined as specified in §60.752(b)(2)(iii)(B) achieved by the control device.

(3) Where an owner or operator subject to the provisions of this subpart seeks to demonstrate compliance with §60.752(b)(2)(iii)(B)(*1*) through use of a boiler or process heater of any size: a description of the location at which the collected gas vent stream is introduced into the boiler or process heater over the same time period of the performance testing.

(4) Where an owner or operator subject to the provisions of this subpart seeks to demonstrate compliance with §60.752(b)(2)(iii)(A) through use of an open flare, the flare type (i.e., steam-assisted, air-assisted, or nonassisted),

all visible emission readings, heat content determination, flow rate or bypass flow rate measurements, and exit velocity determinations made during the performance test as specified in § 60.18; continuous records of the flare pilot flame or flare flame monitoring and records of all periods of operations during which the pilot flame of the flare flame is absent.

(c) Except as provided in § 60.752(b)(2)(i)(B), each owner or operator of a controlled landfill subject to the provisions of this subpart shall keep for 5 years up-to-date, readily accessible continuous records of the equipment operating parameters specified to be monitored in § 60.756 as well as up-to-date, readily accessible records for periods of operation during which the parameter boundaries established during the most recent performance test are exceeded.

(1) The following constitute exceedances that shall be recorded and reported under § 60.757(f):

(i) For enclosed combustors except for boilers and process heaters with design heat input capacity of 44 megawatts (150 million British thermal unit per hour) or greater, all 3-hour periods of operation during which the average combustion temperature was more than 28 oC below the average combustion temperature during the most recent performance test at which compliance with § 60.752(b)(2)(iii) was determined.

(ii) For boilers or process heaters, whenever there is a change in the location at which the vent stream is introduced into the flame zone as required under paragraph (b)(3)(i) of this section.

(2) Each owner or operator subject to the provisions of this subpart shall keep up-to-date, readily accessible continuous records of the indication of flow to the control device or the indication of bypass flow or records of monthly inspections of car-seals or lock-and-key configurations used to seal bypass lines, specified under § 60.756.

(3) Each owner or operator subject to the provisions of this subpart who uses a boiler or process heater with a design heat input capacity of 44 megawatts or greater to comply with § 60.752(b)(2)(iii) shall keep an up-to-date, readily accessible record of all periods of operation of the boiler or process heater. (Examples of such records could include records of steam use, fuel use, or monitoring data collected pursuant to other State, local, Tribal, or Federal regulatory requirements.)

(4) Each owner or operator seeking to comply with the provisions of this subpart by use of an open flare shall keep up-to-date, readily accessible continuous records of the flame or flare pilot flame monitoring specified under § 60.756(c), and up-to-date, readily accessible records of all periods of operation in which the flame or flare pilot flame is absent.

(d) Except as provided in § 60.752(b)(2)(i)(B), each owner or operator subject to the provisions of this subpart shall keep for the life of the collection system an up-to-date, readily accessible plot map showing each existing and planned collector in the system and providing a unique identification location label for each collector.

(1) Each owner or operator subject to the provisions of this subpart shall keep up-to-date, readily accessible records of the installation date and location of all newly installed collectors as specified under § 60.755(b).

(2) Each owner or operator subject to the provisions of this subpart shall keep readily accessible documentation of the nature, date of deposition, amount, and location of asbestos-containing or nondegradable waste excluded from collection as provided in § 60.759(a)(3)(i) as well as any nonproductive areas excluded from collection as provided in § 60.759(a)(3)(ii).

(e) Except as provided in § 60.752(b)(2)(i)(B), each owner or operator subject to the provisions of this subpart shall keep for at least 5 years up-to-date, readily accessible records of all collection and control system exceedances of the operational standards in § 60.753, the reading in the subsequent month whether or not the second reading is an exceedance, and the location of each exceedance.

(f) Landfill owners or operators who convert design capacity from volume to mass or mass to volume to demonstrate that landfill design capacity

is less than 2.5 million megagrams or 2.5 million cubic meters, as provided in the definition of ''design capacity'', shall keep readily accessible, on-site records of the annual recalculation of site-specific density, design capacity, and the supporting documentation. Off-site records may be maintained if they are retrievable within 4 hours. Either paper copy or electronic formats are acceptable.

[61 FR 9919, Mar. 12, 1996, as amended at 63 FR 32752, June 16, 1998]

§ 60.759 Specifications for active collection systems.

(a) Each owner or operator seeking to comply with §60.752(b)(2)(i) shall site active collection wells, horizontal collectors, surface collectors, or other extraction devices at a sufficient density throughout all gas producing areas using the following procedures unless alternative procedures have been approved by the Administrator as provided in §60.752(b)(2)(i)(C) and (D):

(1) The collection devices within the interior and along the perimeter areas shall be certified to achieve comprehensive control of surface gas emissions by a professional engineer. The following issues shall be addressed in the design: depths of refuse, refuse gas generation rates and flow characteristics, cover properties, gas system expandibility, leachate and condensate management, accessibility, compatibility with filling operations, integration with closure end use, air intrusion control, corrosion resistance, fill settlement, and resistance to the refuse decomposition heat.

(2) The sufficient density of gas collection devices determined in paragraph (a)(1) of this section shall address landfill gas migration issues and augmentation of the collection system through the use of active or passive systems at the landfill perimeter or exterior.

(3) The placement of gas collection devices determined in paragraph (a)(1) of this section shall control all gas producing areas, except as provided by paragraphs (a)(3)(i) and (a)(3)(ii) of this section.

(i) Any segregated area of asbestos or nondegradable material may be excluded from collection if documented as provided under §60.758(d). The documentation shall provide the nature, date of deposition, location and amount of asbestos or nondegradable material deposited in the area, and shall be provided to the Administrator upon request.

(ii) Any nonproductive area of the landfill may be excluded from control, provided that the total of all excluded areas can be shown to contribute less than 1 percent of the total amount of NMOC emissions from the landfill. The amount, location, and age of the material shall be documented and provided to the Administrator upon request. A separate NMOC emissions estimate shall be made for each section proposed for exclusion, and the sum of all such sections shall be compared to the NMOC emissions estimate for the entire landfill. Emissions from each section shall be computed using the following equation:

$$Q_i = 2\ k\ L_o\ M_i\ (e^{-kt}\ i)\ (C_{NM}\ OC)\ (3.6 \times 10^{-9})$$

where,

Q_i = NMOC emission rate from the ith section, megagrams per year

k = methane generation rate constant, $year^{-1}$

L_o = methane generation potential, cubic meters per megagram solid waste

M_i = mass of the degradable solid waste in the ith section, megagram

t_i = age of the solid waste in the ith section, years

C_{NMOC} = concentration of nonmethane organic compounds, parts per million by volume

3.6×10^{-9} = conversion factor

(iii) The values for k and C_{NMOC} determined in field testing shall be used if field testing has been performed in determining the NMOC emission rate or the radii of influence (this distance from the well center to a point in the landfill where the pressure gradient applied by the blower or compressor approaches zero). If field testing has not been performed, the default values for k, L_O and C_{NMOC} provided in §60.754(a)(1) or the alternative values from §60.754(a)(5) shall be used. The mass of nondegradable solid waste contained within the given section may be subtracted from the total mass of the section when estimating emissions provided the nature, location, age, and amount of the nondegradable material

is documented as provided in paragraph (a)(3)(i) of this section.

(b) Each owner or operator seeking to comply with §60.752(b)(2)(i)(A) shall construct the gas collection devices using the following equipment or procedures:

(1) The landfill gas extraction components shall be constructed of polyvinyl chloride (PVC), high density polyethylene (HDPE) pipe, fiberglass, stainless steel, or other nonporous corrosion resistant material of suitable dimensions to: convey projected amounts of gases; withstand installation, static, and settlement forces; and withstand planned overburden or traffic loads. The collection system shall extend as necessary to comply with emission and migration standards. Collection devices such as wells and horizontal collectors shall be perforated to allow gas entry without head loss sufficient to impair performance across the intended extent of control. Perforations shall be situated with regard to the need to prevent excessive air infiltration.

(2) Vertical wells shall be placed so as not to endanger underlying liners and shall address the occurrence of water within the landfill. Holes and trenches constructed for piped wells and horizontal collectors shall be of sufficient cross-section so as to allow for their proper construction and completion including, for example, centering of pipes and placement of gravel backfill. Collection devices shall be designed so as not to allow indirect short circuiting of air into the cover or refuse into the collection system or gas into the air. Any gravel used around pipe perforations should be of a dimension so as not to penetrate or block perforations.

(3) Collection devices may be connected to the collection header pipes below or above the landfill surface. The connector assembly shall include a positive closing throttle valve, any necessary seals and couplings, access couplings and at least one sampling port. The collection devices shall be constructed of PVC, HDPE, fiberglass, stainless steel, or other nonporous material of suitable thickness.

(c) Each owner or operator seeking to comply with §60.752(b)(2)(i)(A) shall convey the landfill gas to a control system in compliance with §60.752(b)(2)(iii) through the collection header pipe(s). The gas mover equipment shall be sized to handle the maximum gas generation flow rate expected over the intended use period of the gas moving equipment using the following procedures:

(1) For existing collection systems, the flow data shall be used to project the maximum flow rate. If no flow data exists, the procedures in paragraph (c)(2) of this section shall be used.

(2) For new collection systems, the maximum flow rate shall be in accordance with §60.755(a)(1).

[61 FR 9919, Mar. 12, 1996, as amended at 63 FR 32753, June 16, 1998; 64 FR 9262, Feb. 24, 1999]

APPENDIX A TO PART 60—TEST METHODS

Method 1—Sample and velocity traverses for stationary sources
Method 1A—Sample and velocity traverses for stationary sources with small stacks or ducts
Method 2—Determination of stack gas velocity and volumetric flow rate (Type S pitot tube)
Method 2A—Direct measurement of gas volume through pipes and small ducts
Method 2B—Determination of exhaust gas volume flow rate from gasoline vapor incinerators
Method 2C—Determination of stack gas velocity and volumetric flow rate in small stacks or ducts (standard pitot tube)
Method 2D—Measurement of gas volumetric flow rates in small pipes and ducts
Method 2E—Determination of landfill gas; gas production flow rate
Method 2F—Determination of Stack Gas Velocity and Volumetric Flow Rate With Three-Dimensional Probes
Method 2G—Determination of Stack Gas Velocity and Volumetric Flow Rate With Two-Dimensional Probes
Method 2H—Determination of Stack Gas Velocity Taking Into Account Velocity Decay Near the Stack Wall
Method 3—Gas analysis for the determination of dry molecular weight
Method 3A—Determination of Oxygen and Carbon Dioxide Concentrations in Emissions From Stationary Sources (Instrumental Analyzer Procedure)
Method 3B—Gas analysis for the determination of emission rate correction factor or excess air
Method 3C—Determination of carbon dioxide, methane, nitrogen, and oxygen from stationary sources
Method 4—Determination of moisture content in stack gases

Method 5—Determination of particulate emissions from stationary sources
Method 5A—Determination of particulate emissions from the asphalt processing and asphalt roofing industry
Method 5B—Determination of nonsulfuric acid particulate matter from stationary sources
Method 5C [Reserved]
Method 5D—Determination of particulate matter emissions from positive pressure fabric filters
Method 5E—Determination of particulate emissions from the wool fiberglass insulation manufacturing industry
Method 5F—Determination of nonsulfate particulate matter from stationary sources
Method 5G—Determination of particulate emissions from wood heaters from a dilution tunnel sampling location
Method 5H—Determination of particulate emissions from wood heaters from a stack location
Method 6—Determination of sulfur dioxide emissions from stationary sources
Method 6A—Determination of sulfur dioxide, moisture, and carbon dioxide emissions from fossil fuel combustion sources
Method 6B—Determination of sulfur dioxide and carbon dioxide daily average emissions from fossil fuel combustion sources
Method 6C—Determination of Sulfur Dioxide Emissions From Stationary Sources (Instrumental Analyzer Procedure)
Method 7—Determination of nitrogen oxide emissions from stationary sources
Method 7A—Determination of nitrogen oxide emissions from stationary sources—Ion chromatographic method
Method 7B—Determination of nitrogen oxide emissions from stationary sources (Ultraviolet spectrophotometry)
Method 7C—Determination of nitrogen oxide emissions from stationary sources—Alkaline-permanganate/colorimetric method
Method 7D—Determination of nitrogen oxide emissions from stationary sources—Alkaline-permanganate/ion chromatographic method
Method 7E—Determination of Nitrogen Oxides Emissions From Stationary Sources (Instrumental Analyzer Procedure)
Method 8—Determination of sulfuric acid mist and sulfur dioxide emissions from stationary sources
Method 9—Visual determination of the opacity of emissions from stationary sources
Alternate method 1—Determination of the opacity of emissions from stationary sources remotely by lidar
Method 10—Determination of carbon monoxide emissions from stationary sources
Method 10A—Determination of carbon monoxide emissions in certifying continuous emission monitoring systems at petroleum refineries
Method 10B—Determination of carbon monoxide emissions from stationary sources
Method 11—Determination of hydrogen sulfide content of fuel gas streams in petroleum refineries
Method 12—Determination of inorganic lead emissions from stationary sources
Method 13A—Determination of total fluoride emissions from stationary sources—SPADNS zirconium lake method
Method 13B—Determination of total fluoride emissions from stationary sources—Specific ion electrode method
Method 14—Determination of fluoride emissions from potroom roof monitors for primary aluminum plants
Method 14A— Determination of Total Fluoride Emissions from Selected Sources at Primary Aluminum Production Facilities
Method 15—Determination of hydrogen sulfide, carbonyl sulfide, and carbon disulfide emissions from stationary sources
Method 15A—Determination of total reduced sulfur emissions from sulfur recovery plants in petroleum refineries
Method 16—Semicontinuous determination of sulfur emissions from stationary sources
Method 16A—Determination of total reduced sulfur emissions from stationary sources (impinger technique)
Method 16B—Determination of total reduced sulfur emissions from stationary sources
Method 17—Determination of particulate emissions from stationary sources (in-stack filtration method)
Method 18—Measurement of gaseous organic compound emissions by gas chromatography
Method 19—Determination of sulfur dioxide removal efficiency and particulate, sulfur dioxide and nitrogen oxides emission rates
Method 20—Determination of nitrogen oxides, sulfur dioxide, and diluent emissions from stationary gas turbines
Method 21—Determination of volatile organic compound leaks
Method 22—Visual determination of fugitive emissions from material sources and smoke emissions from flares
Method 23—Determination of Polychlorinated Dibenzo-p-Dioxins and Polychlorinated Dibenzofurans From Stationary Sources
Method 24—Determination of volatile matter content, water content, density, volume solids, and weight solids of surface coatings
Method 24A—Determination of volatile matter content and density of printing inks and related coatings
Method 25—Determination of total gaseous nonmethane organic emissions as carbon

Method 25A—Determination of total gaseous organic concentration using a flame ionization analyzer
Method 25B—Determination of total gaseous organic concentration using a nondispersive infrared analyzer
Method 25C—Determination of nonmethane organic compounds (NMOC) in MSW landfill gases
Method 25D—Determination of the Volatile Organic Concentration of Waste Samples
Method 25E—Determination of Vapor Phase Organic Concentration in Waste Samples
Method 26—Determination of Hydrogen Chloride Emissions From Stationary Sources
Method 26A—Determination of hydrogen halide and halogen emissions from stationary sources—isokinetic method
Method 27—Determination of vapor tightness of gasoline delivery tank using pressure-vacuum test
Method 28—Certification and auditing of wood heaters
Method 28A—Measurement of air to fuel ratio and minimum achievable burn rates for wood-fired appliances
Method 29—Determination of metals emissions from stationary sources

The test methods in this appendix are referred to in §60.8 (Performance Tests) and §60.11 (Compliance With Standards and Maintenance Requirements) of 40 CFR part 60, subpart A (General Provisions). Specific uses of these test methods are described in the standards of performance contained in the subparts, beginning with Subpart D.

Within each standard of performance, a section title ''Test Methods and Procedures'' is provided to: (1) Identify the test methods to be used as reference methods to the facility subject to the respective standard and (2) identify any special instructions or conditions to be followed when applying a method to the respective facility. Such instructions (for example, establish sampling rates, volumes, or temperatures) are to be used either in addition to, or as a substitute for procedures in a test method. Similarly, for sources subject to emission monitoring requirements, specific instructions pertaining to any use of a test method as a reference method are provided in the subpart or in Appendix B.

Inclusion of methods in this appendix is not intended as an endorsement or denial of their applicability to sources that are not subject to standards of performance. The methods are potentially applicable to other sources; however, applicability should be confirmed by careful and appropriate evaluation of the conditions prevalent at such sources.

The approach followed in the formulation of the test methods involves specifications for equipment, procedures, and performance. In concept, a performance specification approach would be preferable in all methods because this allows the greatest flexibility to the user. In practice, however, this approach is impractical in most cases because performance specifications cannot be established. Most of the methods described herein, therefore, involve specific equipment specifications and procedures, and only a few methods in this appendix rely on performance criteria.

Minor changes in the test methods should not necessarily affect the validity of the results and it is recognized that alternative and equivalent methods exist. Section 60.8 provides authority for the Administrator to specify or approve (1) equivalent methods, (2) alternative methods, and (3) minor changes in the methodology of the test methods. It should be clearly understood that unless otherwise identified all such methods and changes must have prior approval of the Administrator. An owner employing such methods or deviations from the test methods without obtaining prior approval does so at the risk of subsequent disapproval and retesting with approved methods.

Within the test methods, certain specific equipment or procedures are recognized as being acceptable or potentially acceptable and are specifically identified in the methods. The items identified as acceptable options may be used without approval but must be identified in the test report. The potentially approvable options are cited as ''subject to the approval of the Administrator'' or as ''or equivalent.'' Such potentially approvable techniques or alternatives may be used at the discretion of the owner without prior approval. However, detailed descriptions for applying these potentially approvable techniques or alternatives are not provided in the test methods. Also, the potentially approvable options are not necessarily acceptable in all applications. Therefore, an owner electing to use such potentially approvable techniques or alternatives is responsible for: (1) assuring that the techniques or alternatives are in fact applicable and are properly executed; (2) including a written description of the alternative method in the test report (the written method must be clear and must be capable of being performed without additional instruction, and the the degree of detail should be similar to the detail contained in the test methods); and (3) providing any rationale or supporting data necessary to show the validity of the alternative in the particular application. Failure to meet these requirements can result in the Administrator's disapproval of the alternative.

METHOD 1—SAMPLE AND VELOCITY TRAVERSES FOR STATIONARY SOURCES

1. *Principle and Applicability*

1.1 Principle. To aid in the representative measurement of pollutant emissions and/or total volumetric flow rate from a stationary source, a measurement site where the effluent stream is flowing in a known direction is

selected, and the cross-section of the stack is divided into a number of equal areas. A traverse point is then located within each of these equal areas.

1.2 Applicability. This method is applicable to flowing gas streams in ducts, stacks, and flues. The method cannot be used when: (1) flow is cyclonic or swirling (see Section 2.4), (2) a stack is smaller than about 0.30 meter (12 in.) in diameter, or 0.071 m^2(113 $in.^2$) cross-sectional area, or (3) the measurement site is less than two stack or duct diameters downstream or less than a half diameter upstream from a flow disturbance.

The requirements of this method must be considered before construction of a new facility from which emissions will be measured; failure to do so may require subsequent alterations to the stack or deviation from the standard procedure. Cases involving variants are subject to approval by the Administrator, U.S. Environmental Protection Agency.

2. *Procedure*

2.1 Selection of Measurement Site. Sampling or velocity measurement is performed at a site located at least eight stack or duct diameters downstream and two diameters upstream from any flow disturbance such as a bend, expansion, or contraction in the stack, or from a visible flame. If necessary, an alternative location may be selected, at a position at least two stack or duct diameters downstream and a half diameter upstream from any flow disturbance. For a rectangular cross section, an equivalent diameter (D_e) shall be calculated from the following equation, to determine the upstream and downstream distances:

$$D_e = \frac{2LW}{(L+W)}$$

where L=length and W=width.

An alternative procedure is available for determining the acceptability of a measurement location not meeting the criteria above. This procedure, determination of gas flow angles at the sampling points and comparing the results with acceptability criteria, is described in Section 2.5.

2.2 Determining the Number of Traverse Points.

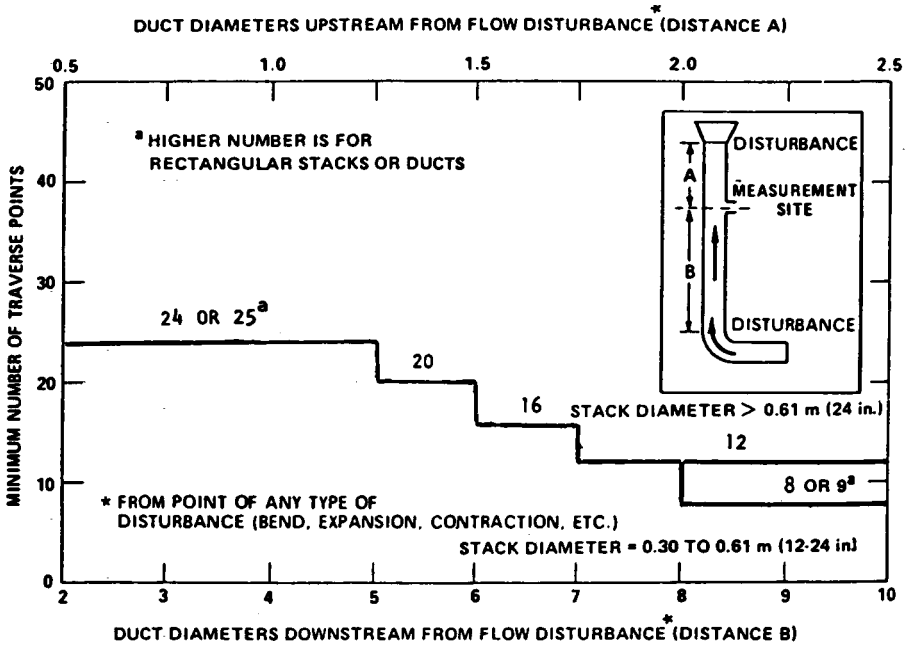

Figure 1-1. Minimum number of traverse points for particulate traverses.

2.2.1 Particulate Traverses. When the eight- and two-diameter criterion can be met, the minimum number of traverse points shall be: (1) twelve, for circular or rectangular stacks with diameters (or equivalent diameters) greater than 0.61 meter (24 in.); (2) eight, for circular stacks with diameters between 0.30 and 0.61 meter (12–24 in.); (3) nine, for rectangular stacks with equivalent diameters between 0.30 and 0.61 meter (12–24 in.).

When the eight- and two-diameter criterion cannot be met, the minimum number of traverse points is determined from Figure 1–1. Before referring to the figure, however, determine the distances from the chosen measurement site to the nearest upstream and downstream disturbances, and divide each distance by the stack diameter or equivalent diameter, to determine the distance in terms of the number of duct diameters. Then, determine from Figure 1–1 the minimum number of traverse points that corresponds: (1) to the number of duct diameters upstream; and (2) to the number of diameters downstream. Select the higher of the two minimum numbers of traverse points, or a greater value, so that for circular stacks the number is a multiple of 4, and for rectangular stacks, the number is one of those shown in Table 1–1.

TABLE 1–1. CROSS-SECTION LAYOUT FOR RECTANGULAR STACKS

Number of traverse points	Matrix layout
9	3x3
12	4x3
16	4x4
20	5x4
25	5x5
30	6x5
36	6x6
42	7x6
49	7x7

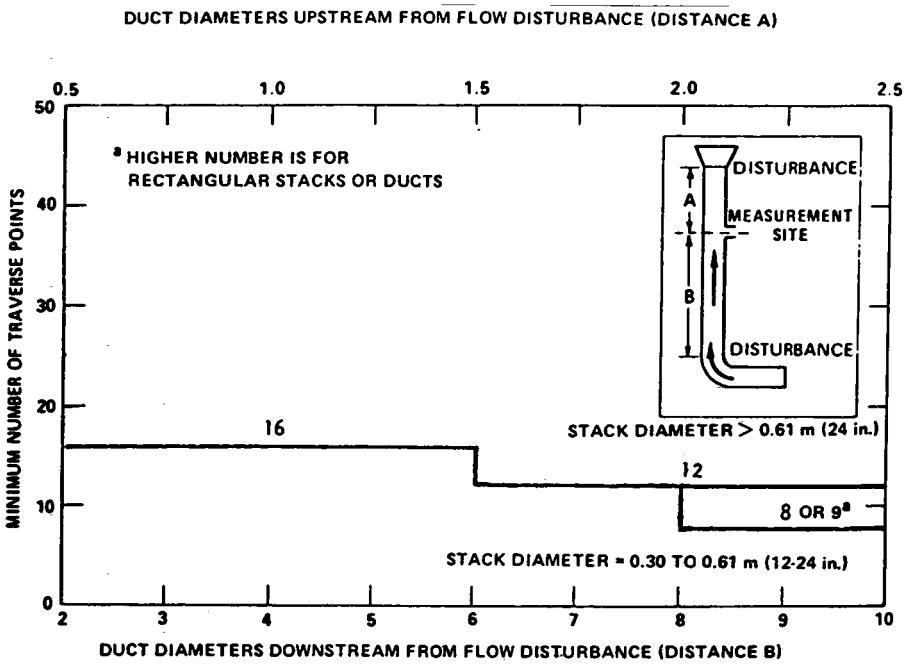

Figure 1-2. Minimum number of traverse points for velocity (nonparticulate) traverses.

2.2.2 Velocity (Non-Particulate) Traverses. When velocity or volumetric flow rate is to be determined (but not particulate matter), the same procedure as that for particulate traverses (Section 2.2.1) is followed, except that Figure 1–2 may be used instead of Figure 1–1.

2.3 Cross-sectional Layout and Location of Traverse Points.

2.3.1 Circular Stacks. Locate the traverse points on two perpendicular diameters according to Table 1–2 and the example shown in Figure 1–3. Any equation (for examples, see Citations 2 and 3 in the Bibliography) that gives the same values as those in Table 1–2 may be used in lieu of Table 1–2.

For particulate traverses, one of the diameters must be in a plane containing the greatest expected concentration variation, e.g., after bends, one diameter shall be in the plane of the bend. This requirement becomes less critical as the distance from the disturbance increases; therefore, other diameter locations may be used, subject to approval of the Administrator.

In addition for stacks having diameters greater than 0.61 m (24 in.) no traverse points shall be located within 2.5 centimeters (1.00 in.) of the stack walls; and for stack diameters equal to or less than 0.61 m (24 in.), no traverse points shall be located within 1.3 cm (0.50 in.) of the stack walls. To meet these criteria, observe the procedures given below.

2.3.1.1 Stacks With Diameters Greater Than 0.61 m (24 in.). When any of the traverse points as located in Section 2.3.1 fall within 2.5 cm (1.00 in.) of the stack walls, relocate them away from the stack walls to: (1) a distance of 2.5 cm (1.00 in.); or (2) a distance equal to the nozzle inside diameter, whichever is larger. These relocated traverse points (on each end of a diameter) shall be the ''adjusted'' traverse points.

Whenever two successive traverse points are combined to form a single adjusted traverse point, treat the adjusted point as two separate traverse points, both in the sampling (or velocity measurement) procedure, and in recording the data.

TRAVERSE POINT	DISTANCE, % of diameter
1	4.4
2	14.7
3	29.5
4	70 5
5	85 3
6	95.6

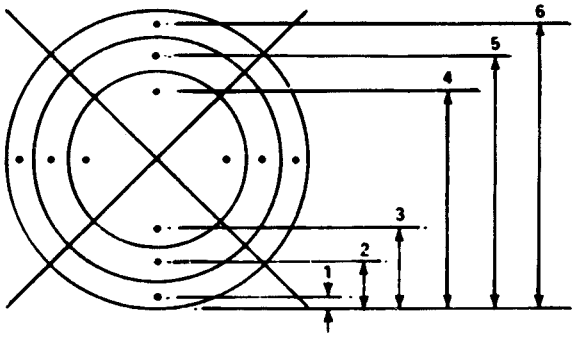

Figure 1-3. Example showing circular stack cross section divided into 12 equal areas, with location of traverse points indicated.

TABLE 1–2. LOCATION OF TRAVERSE POINTS IN CIRCULAR STACKS

[Percent of stack diameter from inside wall to traverse point]

Traverse point number on a diameter	Number of traverse points on a diameter—											
	2	4	6	8	10	12	14	16	18	20	22	24
1	14.6	6.7	4.4	3.2	2.6	2.1	1.8	1.6	1.4	1.3	1.1	1.1
2	85.4	25.0	14.6	10.5	8.2	6.7	5.7	4.9	4.4	3.9	3.5	3.2
3	.....	75.0	29.6	19.4	14.6	11.8	9.9	8.5	7.5	6.7	6.0	5.5
4	.....	93.3	70.4	32.3	22.6	17.7	14.6	12.5	10.9	9.7	8.7	7.9
5	.....	.....	85.4	67.7	34.2	25.0	20.1	16.9	14.6	12.9	11.6	10.5
6	.....	.....	95.6	80.6	65.8	35.6	26.9	22.0	18.8	16.5	14.6	13.2
7	.....	.....	.....	89.5	77.4	64.4	36.6	28.3	23.6	20.4	18.0	16.1
8	.....	.....	.....	96.8	85.4	75.0	63.4	37.5	29.6	25.0	21.8	19.4
9	.....	.....	.....	.....	91.8	82.3	73.1	62.5	38.2	30.6	26.2	23.0
10	.....	.....	.....	.....	97.4	88.2	79.9	71.7	61.8	38.8	31.5	27.2
11	.....	.....	.....	.....	.....	93.3	85.4	78.0	70.4	61.2	39.3	32.3
12	.....	.....	.....	.....	.....	97.9	90.1	83.1	76.4	69.4	60.7	39.8
13	.....	.....	.....	.....	.....	.....	94.3	87.5	81.2	75.0	68.5	60.2
14	.....	.....	.....	.....	.....	.....	98.2	91.5	85.4	79.6	73.8	67.7
15	.....	.....	.....	.....	.....	.....	.....	95.1	89.1	83.5	78.2	72.8
16	.....	.....	.....	.....	.....	.....	.....	98.4	92.5	87.1	82.0	77.0
17	.....	.....	.....	.....	.....	.....	.....	.....	95.6	90.3	85.4	80.6
18	.....	.....	.....	.....	.....	.....	.....	.....	98.6	93.3	88.4	83.9

TABLE 1–2. LOCATION OF TRAVERSE POINTS IN CIRCULAR STACKS—Continued

[Percent of stack diameter from inside wall to traverse point]

Traverse point number on a diameter	Number of traverse points on a diameter—											
	2	4	6	8	10	12	14	16	18	20	22	24
19	.....	.....	.....	.....	.....	.....	.....	.....	.....	96.1	91.3	86.8
20	.....	.....	.....	.....	.....	.....	.....	.....	.....	98.7	94.0	89.5
21	.....	.....	.....	.....	.....	.....	.....	.....	.....	.....	96.5	92.1
22	.....	.....	.....	.....	.....	.....	.....	.....	.....	.....	98.9	94.5
23	.....	.....	.....	.....	.....	.....	.....	.....	.....	.....	.....	96.8
24	.....	.....	.....	.....	.....	.....	.....	.....	.....	.....	.....	98.9

2.3.1.2 Stacks With Diameters Equal to or Less Than 0.61 m (24 in.). Follow the procedure in Section 2.3.1.1, noting only that any ''adjusted'' points should be relocated away from the stack walls to: (1) a distance of 1.3 cm (0.50 in.); or (2) a distance equal to the nozzle inside diameter, whichever is larger.

2.3.2 Rectangular Stacks. Determine the number of traverse points as explained in Sections 2.1 and 2.2 of this method. From Table 1–1, determine the grid configuration. Divide the stack cross-section into as many equal rectangular elemental areas as traverse points, and then locate a traverse point at the centroid of each equal area according to the example in Figure 1–4.

If the tester desires to use more than the minimum number of traverse points, expand the ''minimum number of traverse points'' matrix (see Table 1–1) by adding the extra traverse points along one or the other or both legs of the matrix; the final matrix need not be balanced. For example, if a 4x3 ''minimum number of points'' matrix were expanded to 36 points, the final matrix could be 9x4 or 12x3, and would not necessarily have to be 6x6. After constructing the final matrix, divide the stack cross-section into as many equal rectangular, elemental areas as traverse points, and locate a traverse point at the centroid of each equal area.

The situation of traverse points being too close to the stack walls is not expected to arise with rectangular stacks. If this problem should ever arise, the Administrator must be contacted for resolution of the matter.

2.4 Verification of Absence of Cyclonic Flow. In most stationary sources, the direction of stack gas flow is essentially parallel to the stack walls. However, cyclonic flow may exist (1) after such devices as cyclones and inertial demisters following venturi scrubbers, or (2) in stacks having tangential inlets or other duct configurations which tend to induce swirling; in these instances, the presence or absence of cyclonic flow at the sampling location must be determined. The following techniques are acceptable for this determination.

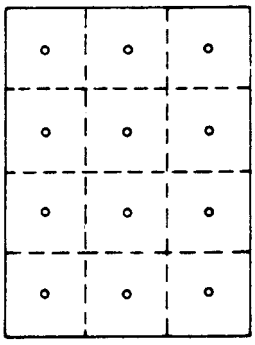

Level and zero the manometer. Connect a Type S pitot tube to the manometer. Position the Type S pitot tube at each traverse point, in succession, so that the planes of the face openings of the pitot tube are perpendicular to the stack cross-sectional plane; when the Type S pitot tube is in this position, it is at ''0° reference.'' Note the differential pressure (Δp) reading at each traverse point. If a null (zero) pitot reading is obtained at 0° reference at a given traverse point, an acceptable flow condition exists at that point. If the pitot reading is not zero at 0° reference, rotate the pitot tube (up to ±90° yaw angle), until a null reading is obtained. Carefully determine and record the value of the rotation angle (α) to the nearest degree. After the null technique has been applied at each traverse point, calculate the average of the absolute values of α; assign αvalues of 0° to those points for which no rotation was required, and include these in the overall average. If the average value of $\alpha$is greater than 20°, the overall flow condition in the stack is unacceptable and alternative methodology, subject to the approval of the Administrator, must be used to perform accurate sample and velocity traverses.

The alternative procedure described in Section 2.5 may be used to determine the rotation angles in lieu of the procedure described above.

2.5 Alternative Measurement Site Selection Procedure. This alternative applies to sources where measurement locations are

less than 2 equivalent stack or duct diameters downstream or less than ½ duct diameter upstream from a flow disturbance. The alternative should be limited to ducts larger than 24 in. in diameter where blockage and wall effects are minimal. A directional flow-sensing probe is used to measure pitch and yaw angles of the gas flow at 40 or more traverse points; the resultant angle is calculated and compared with acceptable criteria for mean and standard deviation.

NOTE: Both the pitch and yaw angles are measured from a line passing through the traverse point and parallel to the stack axis. The pitch angle is the angle of the gas flow component in the plane that INCLUDES the traverse line and is parallel to the stack axis. The yaw angle is the angle of the gas flow component in the plane PERPENDICULAR to the traverse line at the traverse point and is measured from the line passing through the traverse point and parallel to the stack axis.

2.5.1 Apparatus.

2.5.1.1 Directional Probe. Any directional probe, such as United Sensor Type DA Three-Dimensional Directional Probe, capable of measuring both the pitch and yaw angles of gas flows is acceptable. (NOTE: Mention of trade name or specific products does not constitute endorsement by the U.S. Environmental Protection Agency.) Assign an identification number to the directional probe, and permanently mark or engrave the number on the body of the probe. The pressure holes of directional probes are susceptible to plugging when used in particulate-laden gas streams. Therefore, a system for cleaning the pressure holes by ''back-purging'' with pressurized air is required.

2.5.1.2 Differential Pressure Gauges. Inclined manometers, U-tube manometers, or other differential pressure gauges (e.g., magnehelic gauges) that meet the specifications described in Method 2, section 2.2.

NOTE: If the differential pressure gauge produces both negative and positive readings, then both negative and positive pressure readings shall be calibrated at a minimum of three points as specified in Method 2, section 2.2.

2.5.2 Traverse Points. Use a minimum of 40 traverse points for circular ducts and 42 points for rectangular ducts for the gas flow angle determinations. Follow section 2.3 and Table 1–1 or 1–2 for the location and layout of the traverse points. If the measurement location is determined to be acceptable according to the criteria in this alternative procedure, use the same traverse point number and locations for sampling and velocity measurements.

2.5.3 Measurement Procedure.

2.5.3.1 Prepare the directional probe and differential pressure gauges as recommended by the manufacturer. Capillary tubing or surge tanks may be used to dampen pressure fluctuations. It is recommended, but not required, that a pretest leak check be conducted. To perform a leak check, pressurize or use suction on the impact opening until a reading of at least 7.6 cm (3 in.) H_2O registers on the differential pressure gauge, then plug the impact opening. The pressure of a leak-free system will remain stable for at least 15 seconds.

2.5.3.2 Level and zero the manometers. Since the manometer level and zero may drift because of vibrations and temperature changes, periodically check the level and zero during the traverse.

2.5.3.3 Position the probe at the appropriate locations in the gas stream, and rotate until zero deflection is indicated for the yaw angle pressure gauge. Determine and record the yaw angle. Record the pressure gauge readings for the pitch angle, and determine the pitch angle from the calibration curve. Repeat this procedure for each traverse point. Complete a ''back-purge'' of the pressure lines and the impact openings prior to measurements of each traverse point.

A post-test check as described in section 2.5.3.1 is required. If the criteria for a leak-free system are not met, repair the equipment, and repeat the flow angle measurements.

2.5.4 Calculate the resultant angle at each traverse point, the average resultant angle, and the standard deviation using the following equations. Complete the calculations retaining at least one extra significant figure beyond that of the acquired data. Round the values after the final calculations.

2.5.4.1 Calculate the resultant angle at each traverse point:

R_i=arc cosine [(cosine Y_i)(cosine P_i)]

Eq. 1–2

Where:

R_i=Resultant angle at traverse point i, degree.

Y_i=Yaw angle at traverse point i, degree.

P_i=Pitch angle at traverse point i, degree.

2.5.4.2 Calculate the average resultant for the measurements:

$$\overline{R} = \frac{\sum R_i}{n} \qquad \text{Eq. 1-3}$$

Where:

R=Average resultant angle, degree.

n=Total number of traverse points.

2.5.4.3 Calculate the standard deviations:

$$S_d = \sqrt{\frac{\sum_{i=1}^{n} (R_i - \overline{R})^2}{(n-1)}}$$

Eq. 1–4

Where:

S_d=Standard deviation, degree.

2.5.5 The measurement location is acceptable if R≤20° and S_d≤10°.

2.5.6 Calibration. Use a flow system as described in Sections 4.1.2.1 and 4.1.2.2 of Method 2. In addition, the flow system shall have the capacity to generate two test-section velocities: one between 365 and 730 m/min (1200 and 2400 ft/min) and one between 730 and 1100 m/min (2400 and 3600 ft/min).

2.5.6.1 Cut two entry ports in the test section. The axis through the entry ports shall be perpendicular to each other and intersect in the centroid of the test section. The ports should be elongated slots parallel to the axis of the test section and of sufficient length to allow measurement of pitch angles while maintaining the pitot head position at the test-section centroid. To facilitate alignment of the directional probe during calibration, the test section should be constructed of plexiglass or some other transparent material. All calibration measurements should be made at the same point in the test section, preferably at the centroid of the test section.

2.5.6.2 To ensure that the gas flow is parallel to the central axis of the test section, follow the procedure in Section 2.4 for cyclonic flow determination to measure the gas flow angles at the centroid of the test section from two test ports located 90°apart. The gas flow angle measured in each port must be ±2° of 0°. Straightening vanes should be installed, if necessary, to meet this criterion.

2.5.6.3 Pitch Angle Calibration. Perform a calibration traverse according to the manufacturer's recommended protocol in 5° increments for angles from −60° to =60° at one velocity in each of the two ranges specified above. Average the pressure ratio values obtained for each angle in the two flow ranges, and plot a calibration curve with the average values of the pressure ratio (or other suitable measurement factor as recommended by the manufacturer) versus the pitch angle. Draw a smooth line through the data points. Plot also the data values for each traverse point. Determine the differences between the measured data values and the angle from the calibration curve at the same pressure ratio. The difference at each comparison must be within 2° for angles between 0° and 40° and within 3°for angles between 40 ° and 60°.

2.5.6.4 Yaw Angle Calibration. Mark the three-dimensional probe to allow the determination of the yaw position of the probe. This is usually a line extending the length of the probe and aligned with the impact opening. To determine the accuracy of measurements of the yaw angle, only the zero or null position need be calilbrated as follows. Place the directional probe in the test section, and rotate the probe until the zero position is found. With a protractor or other angle measuring device, measure the angle indicated by the yaw angle indicator on the three-dimensional probe. This should be within 2°of 0°. Repeat this measurement for any other points along the length of the pitot where yaw angle measurements could be read in order to account for variations in the pitot markings used to indicate pitot head positions.

3. *Bibliography*

1. Determining Dust Concentration in a Gas Stream, ASME. Performance Test Code No. 27. New York, 1957.

2. Devorkin, Howard, et al. Air Pollution Source Testing Manual. Air Pollution Control District. Los Angeles, CA November 1963.

3. Methods for Determination of Velocity, Volume, Dust and Mist Content of Gases. Western Precipitation Division of Joy Manufacturing Co. Los Angeles, CA. Bulletin WP–50. 1968.

4. Standard Method for Sampling Stacks for Particulate Matter. In: 1971 Book of ASTM Standards, Part 23. ASTM Designation D–2928–71. Philadelphia, PA 1971.

5. Hanson, H.A., et al. Particulate Sampling Strategies for Large Power Plants Including Nonuniform Flow. USEPA, ORD, ESRL, Research Triangle Park, NC. EPA–600/2–76–170, June 1976.

6. Entropy Environmentalists, Inc. Determination of the Optimum Number of Sampling Points: An Analysis of Method 1 Criteria. Environmental Protection Agency, Research Triangle Park, NC. EPA Contract No. 68–01–3172, Task 7.

7. Hanson, H.A., R.J. Davini, J.K. Morgan, and A.A. Iversen. Particulate Sampling Strategies for Large Power Plants Including Nonuniform Flow. U.S. Environmental Protection Agency. Research Triangle Park, NC. Publication No. EPA–600/2–76–170. June 1976. 350 p.

8. Brooks, E.F., and R.L. Williams. Flow and Gas Sampling Manual. U.S. Environmental Protection Agency. Research Triangle Park, NC. Publication No. EPA–600/2–76–203. July 1976. 93 p.

9. Entropy Environmentalists, Inc. Traverse Point Study. EPA Contract No. 68–02–3172. June 1977. 19 p.

10. Brown, J. and K. Yu. Test Report: Particulate Sampling Strategy in Circular Ducts. Emission Measurement Branch, Emission Standards and Engineering Division. U.S. Environmental Protection Agency, Research Triangle Park, NC. 27711. July 31, 1980. 12 p.

11. Hawksley, P.G.W., S. Badzioch, and J.H. Blackett. Measurement of Solids in Flue Gases. Leatherhead, England, The British Coal Utilisation Research Association, 1961. p. 129–133.

12. Knapp, K.T. The Number of Sampling Points Needed for Representative Source Sampling. In: Proceedings of the Fourth National Conference on Energy and the Environment, Theodore, L., et al. (ed.). Dayton, Dayton Section of the American Institute of Chemical Engineers. October 3–7, 1976. p. 563–568.

13. Smith, W.S. and D.J. Grove. A Proposed Extension of EPA Method 1 Criteria. ''Pollution Engineering.'' *XV* (8):36-37. August 1983.

14. Gerhart, P.M. and M.J. Dorsey. Investigation of Field Test Procedures for Large Fans. University of Akron. Akron, OH. (EPRI Contract CS–1651). Final Report (RP–1649–5) December 1980.

15. Smith, W.S. and D.J. Grove. A New Look at Isokinetic Sampling—Theory and Applications. ''Source Evaluation Society Newsletter.'' *VIII* (3):19–24. August 1983.

METHOD 1A—SAMPLE AND VELOCITY TRAVERSES FOR STATIONARY SOURCES WITH SMALL STACKS OR DUCTS

1. Applicability and Principle

1.1 The applicability and principle of this method are identical to Method 1, except this method's applicability is limited to stacks or ducts less than about 0.30 meter (12 in.) in diameter or 0.071 m^2 (113 $in.^2$) in cross-sectional area, but equal to or greater than about 0.10 meter (4 in.) in diameter or 0.0081 m^2 (12.57 $in.^2$) in cross-sectional area.

1.2 In these small diameter stacks or ducts, the conventional Method 5 stack assembly (consisting of a Type S pitot tube attached to a sampling probe, equipped with a nozzle and thermocouple) blocks a significant portion of the cross section of the duct and causes inaccurate measurements. Therefore, for particulate matter (PM) sampling in small stacks or ducts, the gas velocity is measured using a standard pitot tube downstream of the actual emission sampling site. The straight run of duct between the PM sampling and velocity measurement sites allows the flow profile, temporarily disturbed by the presence of the sampling probe, to redevelop and stabilize.

1.3 The cross-sectional layout and location of traverse points and the verification of the absence of cyclonic flow are the same as in Method 1, Sections 2.3 and 2.4, respectively. Differences from Method 1, except as noted, are given below.

2. Procedure

2.1 Selection of Sampling and Measurement Sites.

2.1.1 PM Measurements. Select a PM sampling site located preferably at least 8 equivalent stack or duct diameters downstream and 10 equivalent diameters upstream from any flow disturbances such as bends, expansions, or contractions in the stack, or from a visible flame. Next, locate the velocity measurement site 8 equivalent diameters downstream of the PM sampling site. See Figure 1A–1. If such locations are not available, select an alternative PM sampling site that is at least 2 equivalent stack or duct diameters downstream and 2½ diameters upstream from any flow disturbance. Then, locate the velocity measurement site 2 equivalent diameters downstream from the PM sampling site. Follow Section 2.1 of Method 1 for calculating equivalent diameters for a rectangular cross section.

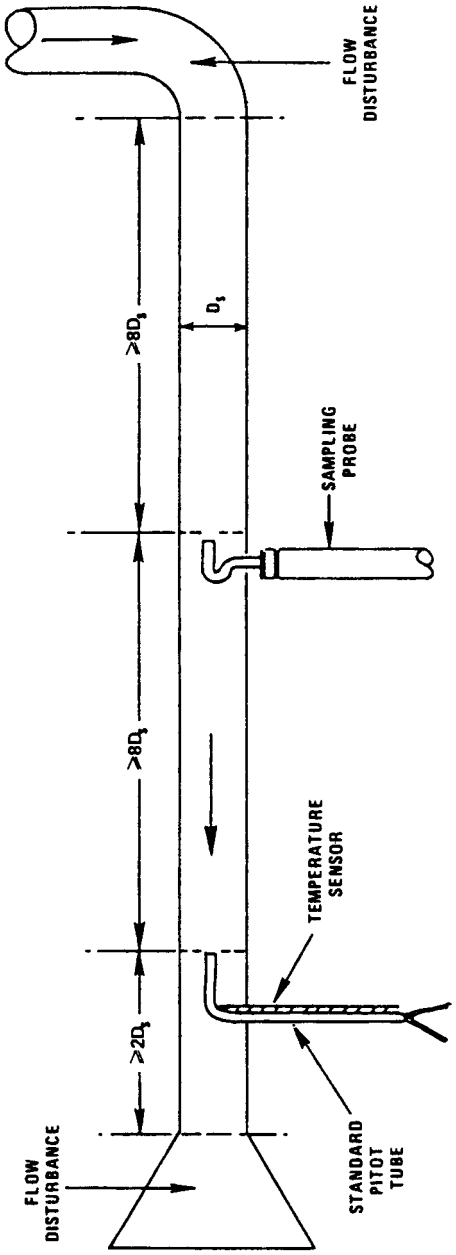

Figure 1A-1. Recommended sampling arrangement for small ducts.

2.1.2 PM Sampling (Steady Flow) or only Velocity Measurements. For PM sampling when the volumetric flow rate in a duct is constant with respect to time, Section 2.1 of Method 1 may be followed, with the PM sampling and velocity measurement performed at one location. To demonstrate that the flow rate is constant (within 10 percent)

when PM measurements are made, perform complete velocity traverses before and after the PM sampling run, and calculate the deviation of the flow rate derived after the PM sampling run from the one derived before the PM sampling run. The PM sampling run is acceptable if the deviation does not exceed 10 percent.

2.2 Determining the Number of Traverse Points.

2.2.1 PM Sampling. Use Figure 1–1 of Method 1 to determine the number of traverse points to use at both the velocity measurement and PM sampling locations. Before referring to the figure, however, determine the distances between both the velocity measurement and PM sampling sites to the nearest upstream and downstream disturbances. Then divide each distance by the stack diameter or equivalent diameter to express the distances in terms of the number of duct diameters. Next, determine the number of traverse points from Figure 1–1 of Method 1 corresponding to each of these four distances. Choose the highest of the four numbers of traverse points (or a greater number) so that, for circular ducts, the number is a multiple of four, and for rectangular ducts, the number is one of those shown in Table 1–1 of Method 1. When the optimum duct diameter location criteria can be satisfied, the minimum number of traverse points required is eight for circular ducts and nine for rectangular ducts.

2.2.2 PM Sampling (Steady Flow) or Velocity Measurements. Use Figure 1–2 of Method 1 to determine the number of traverse points, following the same procedure used for PM sampling traverses as described in Section 2.2.1 of Method 1. When the optimum duct diameter location criteria can be satisfied, the minimum number of traverse points required is eight for circular ducts and nine for rectangular ducts.

3. Bibliography

1. Same as in Method 1, Section 3, Citations 1 through 6.

2. Vollaro, Robert F. Recommended Procedure for Sample Traverses in Ducts Smaller Than 12 Inches in Diameter. U.S. Environmental Protection Agency, Emission Measurement Branch, Research Triangle Park, NC. January 1977.

METHOD 2—DETERMINATION OF STACK GAS VELOCITY AND VOLUMETRIC FLOW RATE (TYPE S PITOT TUBE)

1. *Principle and Applicability*

1.1 Principle. The average gas velocity in a stack is determined from the gas density and from measurement of the average velocity head with a Type S (Stausscheibe or reverse type) pitot tube.

1.2 Applicability. This method is applicable for measurement of the average velocity of a gas stream and for quantifying gas flow.

This procedure is not applicable at measurement sites which fail to meet the criteria of Method 1, Section 2.1. Also, the method cannot be used for direct measurement in cyclonic or swirling gas streams; Section 2.4 of Method 1 shows how to determine cyclonic or swirling flow conditions. When unacceptable conditions exist, alternative procedures, subject to the approval of the Administrator, U.S. Environmental Protection Agency, must be employed to make accurate flow rate determinations; examples of such alternative procedures are: (1) to install straightening vanes; (2) to calculate the total volumetric flow rate stoichiometrically, or (3) to move to another measurement site at which the flow is acceptable.

2. *Apparatus*

Specifications for the apparatus are given below. Any other apparatus that has been demonstrated (subject to approval of the Administrator) to be capable of meeting the specifications will be considered acceptable.

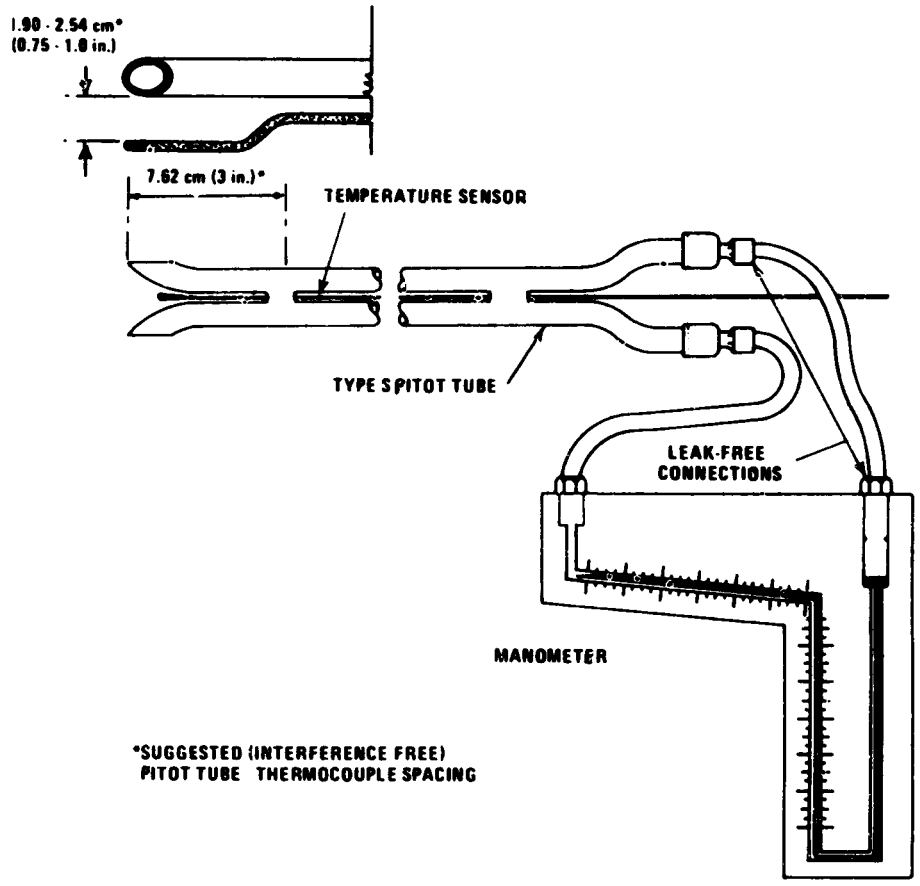

Figure 2-1. Type S pitot tube manometer assembly.

2.1 Type S Pitot Tube. The Type S pitot tube (Figure 2–1) shall be made of metal tubing (e.g., stainless steel). It is recommended that the external tubing diameter (dimension D_t Figure 2–2b) be between 0.48 and 0.95 centimeter (3/16 and 3/8 inch). There shall be an equal distance from the base of each leg of the pitot tube to its face-opening plane (dimensions P_A and P_B Figure 2–2b); it is recommended that this distance be between 1.05 and 1.50 times the external tubing diameter. The face openings of the pitot tube shall, preferably, be aligned as shown in Figure 2–2; however, slight misalignments of the openings are permissible (see Figure 2–3).

The Type S pitot tube shall have a known coefficient, determined as outlined in Section 4. An identification number shall be assigned to the pitot tube; this number shall be permanently marked or engraved on the body of the tube.

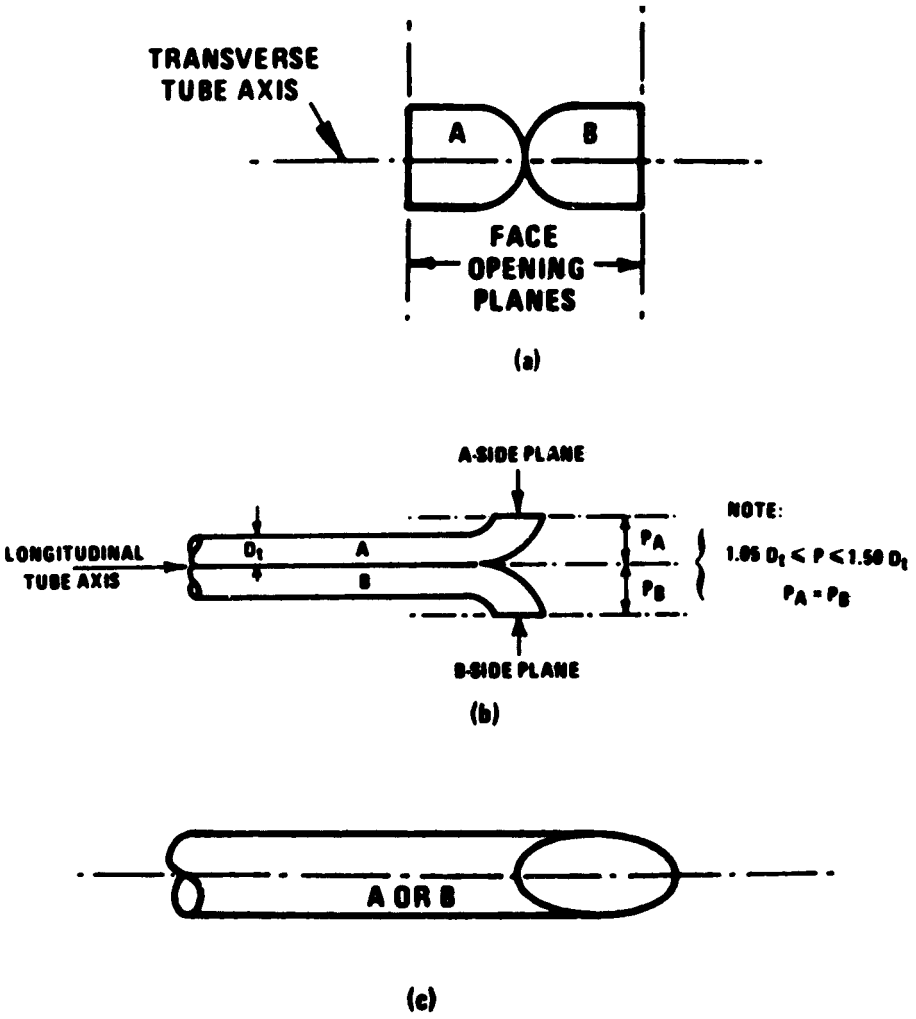

Figure 2-2. Properly constructed Type S pitot tube, shown in: (a) end view; face opening planes perpendicular to transverse axis; (b) top view; face opening planes parallel to longitudinal axis; (c) side view; both legs of equal length and centerlines coincident, when viewed from both sides. Baseline coefficient values of 0.84 may be assigned to pitot tubes constructed this way.

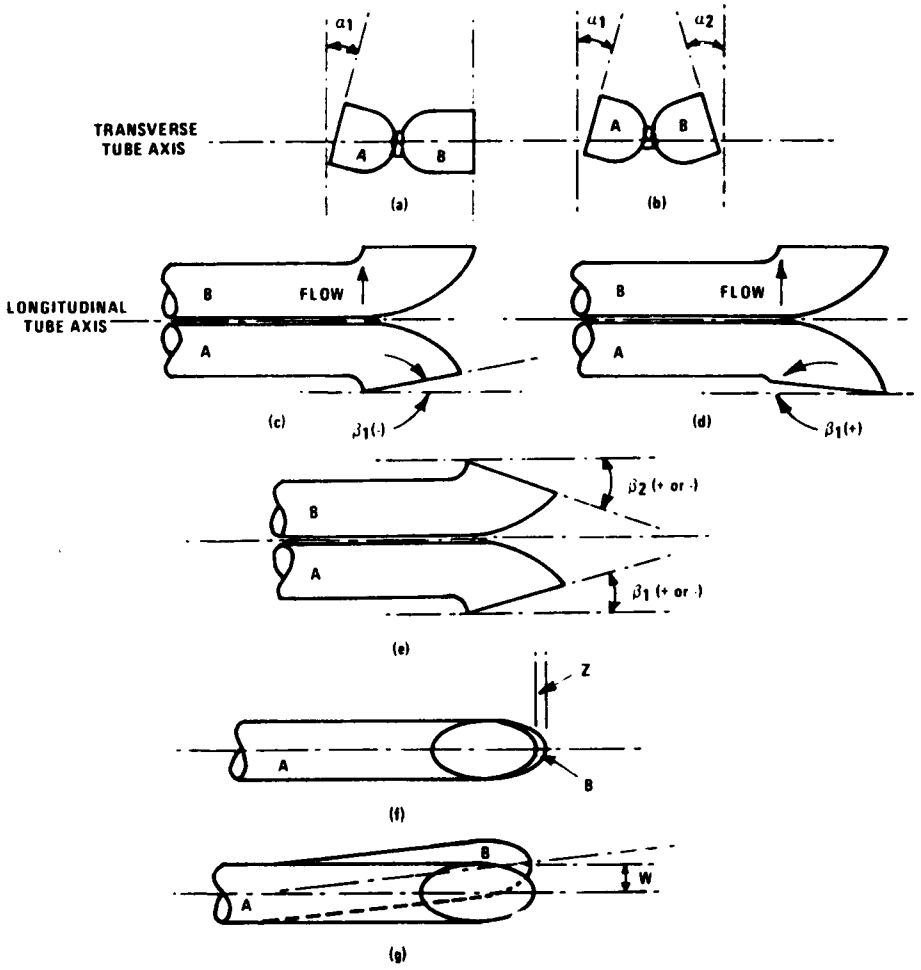

Figure 2-3. Types of face-opening misalignment that can result from field use or improper construction of Type S pitot tubes. These will not affect the baseline value of Cp(s) so long as $\alpha 1$ and $\alpha 2 \leq 10°$, $\beta 1$ and $\beta 2 \leq 5°$, $z \leq 0.32$ cm (1/8 in.) and $w \leq 0.08$ cm (1/32 in.) (citation 11 in Bibliography).

A standard pitot tube may be used instead of a Type S, provided that it meets the specifications of Sections 2.7 and 4.2; note, however, that the static and impact pressure holes of standard pitot tubes are susceptible to plugging in particulate-laden gas streams. Therefore, whenever a standard pitot tube is used to perform a traverse, adequate proof must be furnished that the openings of the pitot tube have not plugged up during the traverse period; this can be done by taking a velocity head (Δp) reading at the final traverse point, cleaning out the impact and static holes of the standard pitot tube by ''back-purging'' with pressurized air, and then taking another Δp reading. If the Δp readings made before and after the air purge are the same (±5 percent), the traverse is acceptable. Otherwise, reject the run. Note that if Δp at the final traverse point is unsuitably low, another point may be selected. If ''back-purging'' at regular intervals is part of the procedure, then comparative Δp readings shall be taken, as above, for the last two back purges at which suitably high Δp readings are observed.

2.2 Differential Pressure Gauge. An inclined manometer or equivalent device is used. Most sampling trains are equipped with a 10-in. (water column) inclined-vertical manometer, having 0.01-in. H_2O divisions on the 0-to 1-in. inclined scale, and 0.1-in. H_2O divisions on the 1- to 10-in. vertical scale. This type of manometer (or other gauge of equivalent sensitivity) is satisfactory for the measurement of Δp values as low as 1.3 mm (0.05 in.) H_2O. However, a differential pressure gauge of greater sensitivity shall be used (subject to the approval of the Administrator), if any of the following is found to be true: (1) the arithmetic average of all Δp readings at the traverse points in the stack is less than 1.3 mm (0.05 in.) H_2O; (2) for traverses of 12 or more points, more than 10 percent of the individual Δp readings are below 1.3 mm (0.05 in.) H_2O; (3) for traverses of fewer than 12 points, more than one Δp reading is below 1.3 mm (0.05 in.) H_2O. Citation 18 in Bibliography describes commercially available instrumentation for the measurement of low-range gas velocities.

As an alternative to criteria (1) through (3) above, the following calculation may be performed to determine the necessity of using a more sensitive differential pressure gauge:

$$T=\frac{\sum_{i=1}^{n}\sqrt{\Delta p_i+K}}{\sum_{i=1}^{n}\sqrt{\Delta p_i}}$$

Where:

Δp_i=Individual velocity head reading at a traverse point, mm H_2O (in. H_2O).

n=Total number of traverse points.

K=0.13 mm H_2O when metric units are used and 0.005 in. H_2O when English units are used.

If T is greater than 1.05, the velocity head data are unacceptable and a more sensitive differential pressure gauge must be used.

NOTE: If differential pressure gauges other than inclined manometers are used (e.g., magnehelic gauges), their calibration must be checked after each test series. To check the calibration of a differential pressure gauge, compare Δp readings of the gauge with those of a gauge-oil manometer at a minimum of three points, approximately representing the range of Δp values in the stack. If, at each point, the values of Δp as read by the differential pressure gauge and gauge-oil manometer agree to within 5 percent, the differential pressure gauge shall be considered to be in proper calibration. Otherwise, the test series shall either be voided, or procedures to adjust the measured Δp values and final results shall be used subject to the approval of the Administrator.

2.3 Temperature Gauge. A thermocouple, liquid-filled bulb thermometer, bimetallic thermometer, mercury-in-glass thermometer, or other gauge, capable of measuring temperature to within 1.5 percent of the minimum absolute stack temperature shall be used. The temperature gauge shall be attached to the pitot tube such that the sensor tip does not touch any metal; the gauge shall be in an interference-free arrangement with respect to the pitot tube face openings (see Figure 2–1 and also Figure 2–7 in Section 4). Alternative positions may be used if the pitot tube-temperature gauge system is calibrated according to the procedure of Section 4. Provided that a difference of not more than 1 percent in the average velocity measurement is introduced, the temperature gauge need not be attached to the pitot tube; this alternative is subject to the approval of the Administrator.

2.4 Pressure Probe and Gauge. A piezometer tube and mercury- or water-filled U-tube manometer capable of measuring stack pressure to within 2.5 mm (0.1 in.) Hg is used. The static tap of a standard type pitot tube or one leg of a Type S pitot tube with the face opening planes positioned parallel to the gas flow may also be used as the pressure probe.

2.5 Barometer. A mercury, aneroid, or other barometer capable of measuring atmospheric pressure to within 2.5 mm Hg (0.1 in. Hg) may be used. In many cases, the barometric reading may be obtained from a nearby National Weather Service station, in which case the station value (which is the absolute barometric pressure) shall be requested and an adjustment for elevation differences between the weather station and the sampling point shall be applied at a rate of minus 2.5 mm (0.1 in.) Hg per 30-meter (100 foot) elevation increase or vice-versa for elevation decrease.

2.6 Gas Density Determination Equipment. Method 3 equipment, if needed (see Section 3.6), to determine the stack gas dry molecular weight, and Reference Method 4 or Method 5 equipment for moisture content determination; other methods may be used subject to approval of the Administrator.

2.7 Calibration Pitot Tube. When calibration of the Type S pitot tube is necessary (see Section 4), a standard pitot tube is used as a reference. The standard pitot tube shall, preferably, have a known coefficient, obtained either (1) directly from the National Bureau of Standards, Route 270, Quince Orchard Road, Gaithersburg, Maryland, or (2) by calibration against another standard pitot tube with an NBS-traceable coefficient. Alternatively, a standard pitot tube designed according to the criteria given in 2.7.1 through 2.7.5 below and illustrated in Figure 2–4 (see also Citations 7, 8, and 17 in Bibliography) may be used. Pitot tubes designed according to these specifications will have baseline coefficients of about 0.99±0.01.

2.7.1 Hemispherical (shown in Figure 2–4), ellipsoidal, or conical tip.

2.7.2 A minimum of six diameters straight run (based upon *D*, the external diameter of the tube) between the tip and the static pressure holes.

2.7.3 A minimum of eight diameters straight run between the static pressure holes and the centerline of the external tube, following the 90 degree bend.

2.7.4 Static pressure holes of equal size (approximately 0.1 *D*), equally spaced in a piezometer ring configuration.

2.7.5 Ninety degree bend, with curved or mitered junction.

2.8 Differential Pressure Gauge for Type S Pitot Tube Calibration. An inclined manometer or equivalent is used. If the single-velocity calibration technique is employed (see Section 4.1.2.3), the calibration differential pressure gauge shall be readable to the nearest 0.13 mm H_2O (0.005 in. H_2O). For multi-velocity calibrations, the gauge shall be readable to the nearest 0.13 mm H_2O (0.005 in. H_2O) for Δp values between 1.3 and 25 mm H_2O (0.05 and 1.0 in. H_2O), and to the nearest 1.3 mm H_2O (0.05 in. H_2O) for Δp values above 25 mm H_2O (1.0 in. H_2O). A special, more sensitive gauge will be required to read Δp values below 1.3 mm H_2O [0.05 in. H_2O] (see Citation 18 in Bibliography).

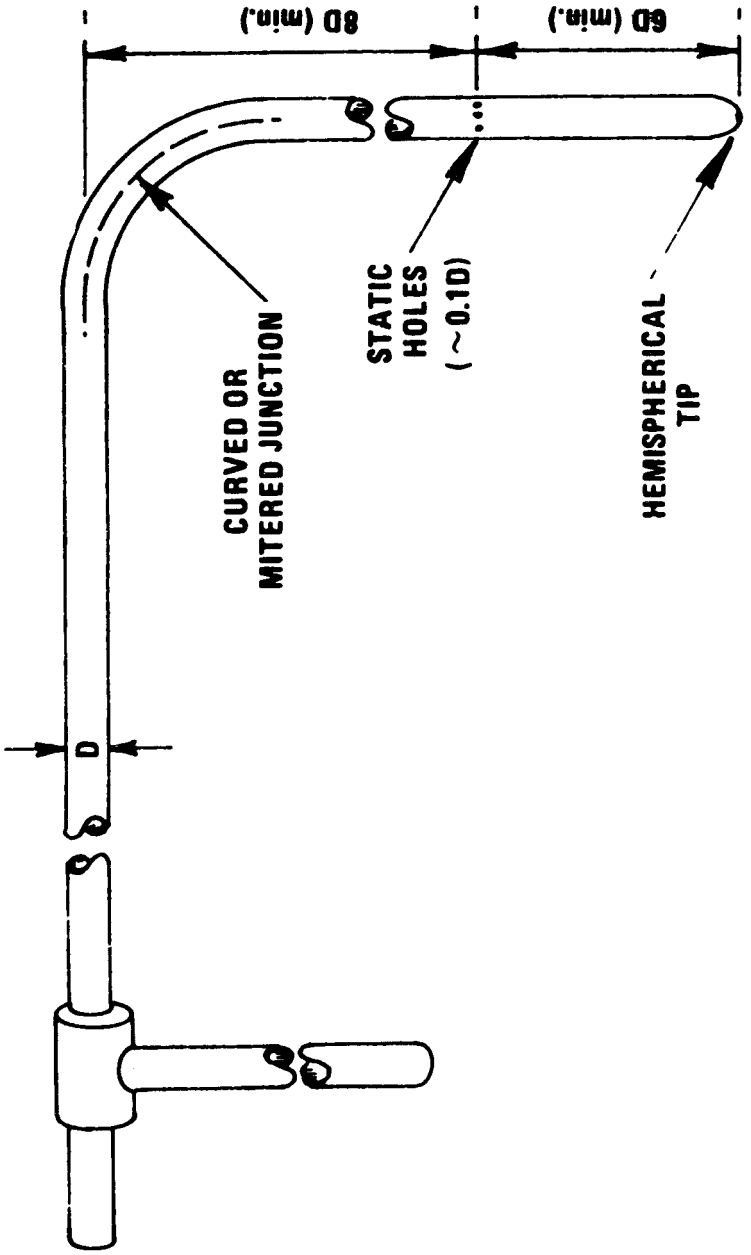

Figure 2-4. Standard pitot tube design specifications.

3. *Procedure*

3.1 Set up the apparatus as shown in Figure 2–1. Capillary tubing or surge tanks installed between the manometer and pitot tube may be used to dampen Δp fluctuations. It is recommended, but not required, that a pretest leak-check be conducted, as follows: (1) blow through the pitot impact opening

until at least 7.6 cm (3 in.) H_2O velocity pressure registers on the manometer; then, close off the impact opening. The pressure shall remain stable for at least 15 seconds; (2) do the same for the static pressure side, except using suction to obtain the minimum of 7.6 cm (3 in.) H_2O. Other leak-check procedures, subject to the approval of the Administrator, may be used.

3.2 Level and zero the manometer. Because the manometer level and zero may drift due to vibrations and temperature changes, make periodic checks during the traverse. Record all necessary data as shown in the example data sheet (Figure 2–5).

3.3 Measure the velocity head and temperature at the traverse points specified by Method 1. Ensure that the proper differential pressure gauge is being used for the range of Δp values encountered (see Section 2.2). If it is necessary to change to a more sensitive gauge, do so, and remeasure the Δp and temperature readings at each traverse point. Conduct a post-test leak-check (mandatory), as described in Section 3.1 above, to validate the traverse run.

3.4 Measure the static pressure in the stack. One reading is usually adequate.

3.5 Determine the atmospheric pressure.

PLANT _____

DATE _____ RUN NO. _____

STACK DIAMETER OR DIMENSIONS, m(in.) _____

BAROMETRIC PRESSURE, mm Hg (in. Hg) _____

CROSS SECTIONAL AREA, $m^2(ft^2)$ _____

OPERATORS _____

PITOT TUBE I.D. NO. _____

AVG. COEFFICIENT, C_p = _____

LAST DATE CALIBRATED _____

SCHEMATIC OF STACK CROSS SECTION

Traverse Pt. No.	Vel. Hd., Δp mm (in.) H_2O	Stack Temperature		P_g mm Hg (in.Hg)	$\sqrt{\Delta p}$
		t_s, °C (°F)	T_s, °K (°R)		
		Average			

Figure 2-5. Velocity traverse data.

3.6 Determine the stack gas dry molecular weight. For combustion processes or processes that emit essentially CO_2, O_2, CO, and N_2, use Method 3. For processes emitting essentially air, an analysis need not be conducted; use a dry molecular weight of 29.0. For other processes, other methods, subject

to the approval of the Administrator, must be used.

3.7 Obtain the moisture content from Reference Method 4 (or equivalent) or from Method 5.

3.8 Determine the cross-sectional area of the stack or duct at the sampling location. Whenever possible, physically measure the stack dimensions rather than using blueprints.

4. *Calibration*

4.1 Type S Pitot Tube. Before its initial use, carefully examine the Type S pitot tube in top, side, and end views to verify that the face openings of the tube are aligned within the specifications illustrated in Figure 2–2 or 2–3. The pitot tube shall not be used if it fails to meet these alignment specifications.

After verifying the face opening alignment, measure and record the following dimensions of the pitot tube: (a) the external tubing diameter (dimension D_t, Figure 2–2b); and (b) the base-to-opening plane distances (dimensions P_A and P_B, Figure 2–2b). If D_t is between 0.48 and 0.95 cm (3/16 and 3/8 in.) and if P_A and P_B are equal and between 1.05 and 1.50 D_t, there are two possible options: (1) the pitot tube may be calibrated according to the procedure outlined in Sections 4.1.2 through 4.1.5 below, or (2) a baseline (isolated tube) coefficient value of 0.84 may be assigned to the pitot tube. Note, however, that if the pitot tube is part of an assembly, calibration may still be required, despite knowledge of the baseline coefficient value (see Section 4.1.1).

If D_t, P_A, and P_B are outside the specified limits, the pitot tube must be calibrated as outlined in 4.1.2 through 4.1.5 below.

4.1.1 Type S Pitot Tube Assemblies. During sample and velocity traverses, the isolated Type S pitot tube is not always used; in many instances, the pitot tube is used in combination with other source-sampling components (thermocouple, sampling probe, nozzle) as part of an ''assembly.'' The presence of other sampling components can sometimes affect the baseline value of the Type S pitot tube coefficient (Citation 9 in Bibliography); therefore an assigned (or otherwise known) baseline coefficient value may or may not be valid for a given assembly. The baseline and assembly coefficient values will be identical only when the relative placement of the components in the assembly is such that aerodynamic interference effects are eliminated. Figures 2–6 through 2–8 illustrate interference-free component arrangements for Type S pitot tubes having external tubing diameters between 0.48 and 0.95 cm (3/16 and 3/8 in.). Type S pitot tube assemblies that fail to meet any or all of the specifications of Figures 2–6 through 2–8 shall be calibrated according to the procedure outlined in Sections 4.1.2 through 4.1.5 below, and prior to calibration, the values of the intercomponent spacings (pitot-nozzle, pitot-thermocouple, pitot-probe sheath) shall be measured and recorded.

NOTE: Do not use any Type S pitot tube assembly which is constructed such that the impact pressure opening plane of the pitot tube is below the entry plane of the nozzle (see Figure 2–6b).

4.1.2 Calibration Setup. If the Type S pitot tube is to be calibrated, one leg of the tube shall be permanently marked A, and the other, B. Calibration shall be done in a flow system having the following essential design features:

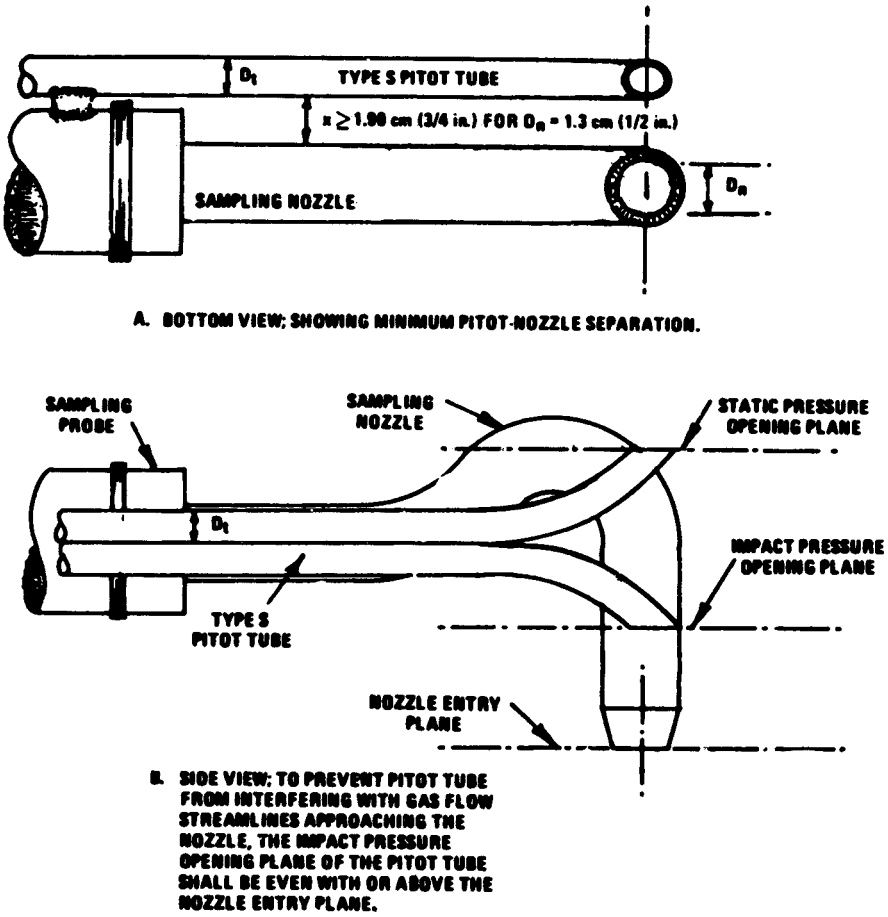

Figure 2-6. Proper pitot tube-sampling nozzle configuration to prevent aerodynamic interference; buttonhook-type nozzle; centers of nozzle and pitot opening aligned; D_t between 0.48 and 0.95 cm (3/16 and 3/8 in.).

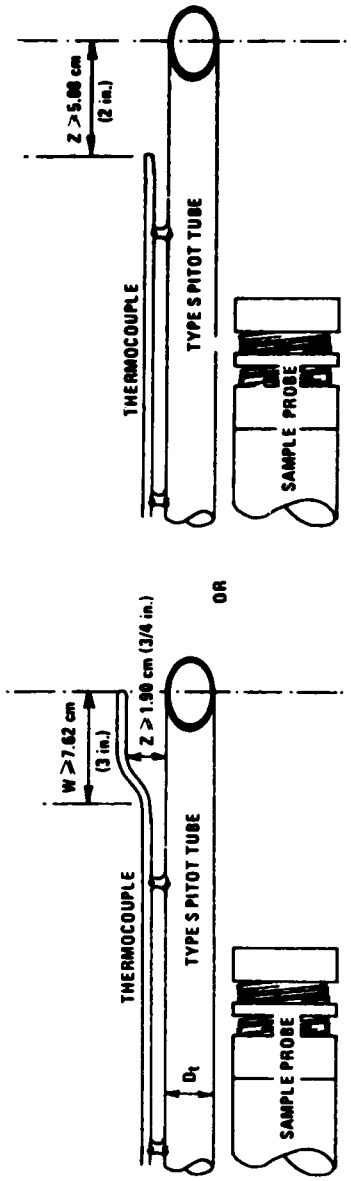

Figure 2-7. Proper thermocouple placement to prevent interference; D_t between 0.48 and 0.95 cm (3/16 and 3/8 in.).

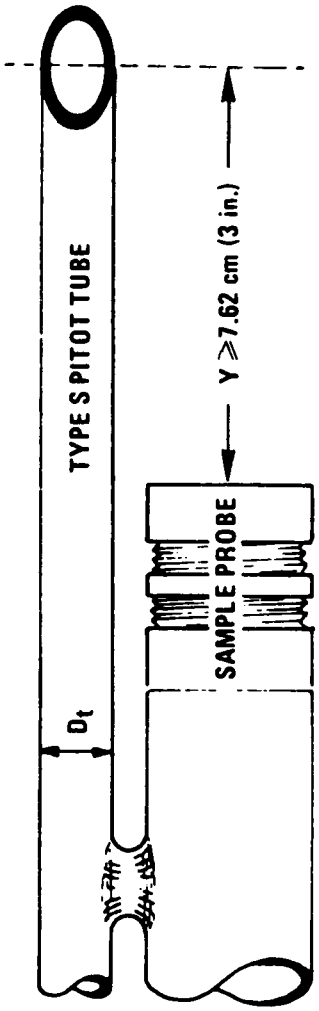

Figure 2-8. Minimum pitot-sample probe separation needed to prevent interference; D_t between 0.48 and 0.95 cm (3/16 and 3/8 in.).

4.1.2.1 The flowing gas stream must be confined to a duct of definite cross-sectional area, either circular or rectangular. For circular cross-sections, the minimum duct diameter shall be 30.5 cm (12 in.); for rectangular cross-sections, the width (shorter side) shall be at least 25.4 cm (10 in.).

4.1.2.2 The cross-sectional area of the calibration duct must be constant over a distance of 10 or more duct diameters. For a rectangular cross-section, use an equivalent diameter, calculated from the following equation, to determine the number of duct diameters:

$$D_e = \frac{2LW}{(L+W)} \qquad \text{Eq. 2-1}$$

Where:
D_e=Equivalent diameter
L=Length
W=Width

To ensure the presence of stable, fully developed flow patterns at the calibration site, or ''test section,'' the site must be located at least eight diameters downstream and two diameters upstream from the nearest disturbances.

NOTE: The eight- and two-diameter criteria are not absolute; other test section locations may be used (subject to approval of the Administrator), provided that the flow at the test site is stable and demonstrably parallel to the duct axis.

4.1.2.3 The flow system shall have the capacity to generate a test-section velocity around 915 m/min (3,000 ft/min). This velocity must be constant with time to guarantee steady flow during calibration. Note that Type S pitot tube coefficients obtained by single-velocity calibration at 915 m/min (3,000 ft/min) will generally be valid to within ±3 percent for the measurement of velocities above 305 m/min (1,000 ft/min) and to within ±5 to 6 percent for the measurement of velocities between 180 and 305 m/min (600 and 1,000 ft/min). If a more precise correlation between C_p and velocity is desired, the flow system shall have the capacity to generate at least four distinct, time-invariant test-section velocities covering the velocity range from 180 to 1,525 m/min (600 to 5,000 ft/min), and calibration data shall be taken at regular velocity intervals over this range (see Citations 9 and 14 in Bibliography for details).

4.1.2.4 Two entry ports, one each for the standard and Type S pitot tubes, shall be cut in the test section; the standard pitot entry port shall be located slightly downstream of the Type S port, so that the standard and Type S impact openings will lie in the same cross-sectional plane during calibration. To facilitate alignment of the pitot tubes during calibration, it is advisable that the test section be constructed of plexiglas or some other transparent material.

4.1.3 Calibration Procedure. Note that this procedure is a general one and must not be used without first referring to the special considerations presented in Section 4.1.5. Note also that this procedure applies only to single-velocity calibration. To obtain calibration data for the A and B sides of the Type S pitot tube, proceed as follows:

4.1.3.1 Make sure that the manometer is properly filled and that the oil is free from contamination and is of the proper density. Inspect and leak-check all pitot lines; repair or replace if necessary.

4.1.3.2 Level and zero the manometer. Turn on the fan and allow the flow to stabilize. Seal the Type S entry port.

4.1.3.3 Ensure that the manometer is level and zeroed. Position the standard pitot tube at the calibration point (determined as outlined in Section 4.1.5.1), and align the tube so that its tip is pointed directly into the flow. Particular care should be taken in aligning the tube to avoid yaw and pitch angles. Make sure that the entry port surrounding the tube is properly sealed.

4.1.3.4 Read Δp_{std} and record its value in a data table similar to the one shown in Figure 2–9. Remove the standard pitot tube from the duct and disconnect it from the manometer. Seal the standard entry port.

4.1.3.5 Connect the Type S pitot tube to the manometer. Open the Type S entry port. Check the manometer level and zero. Insert and align the Type S pitot tube so that its A side impact opening is at the same point as was the standard pitot tube and is pointed directly into the flow. Make sure that the entry port surrounding the tube is properly sealed.

4.1.3.6 Read Δp_8 and enter its value in the data table. Remove the Type S pitot tube from the duct and disconnect it from the manometer.

4.1.3.7 Repeat steps 4.1.3.3 through 4.1.3.6 above until three pairs of Δp readings have been obtained.

4.1.3.8 Repeat steps 4.1.3.3 through 4.1.3.7 above for the B side of the Type S pitot tube.

4.1.3.9 Perform calculations, as described in Section 4.1.4 below.

4.1.4 Calculations.

4.1.4.1 For each of the six pairs of Δp readings (i.e., three from side A and three from side B) obtained in Section 4.1.3 above, calculate the value of the Type S pitot tube coefficient as follows:

PITOT TUBE IDENTIFICATION NUMBER: _____ DATE: _____

CALIBRATED BY: _____

	"A" SIDE CALIBRATION			
RUN NO.	Δp_{std} cm H_2O (in. H_2O)	$\Delta p_{(s)}$ cm H_2O (in. H_2O)	$C_{p(s)}$	DEVIATION $C_{p(s)} - \bar{C}_p(A)$
1				
2				
3				
		$\bar{C}_p$ (SIDE A)		

	"B" SIDE CALIBRATION			
RUN NO.	Δp_{std} cm H_2O (in. H_2O)	$\Delta p_{(s)}$ cm H_2O (in. H_2O)	$C_{p(s)}$	DEVIATION $C_{p(s)} - \bar{C}_p(B)$
1				
2				
3				
		$\bar{C}_p$ (SIDE B)		

$$\text{AVERAGE DEVIATION} = \sigma\text{(A OR B)} = \frac{\sum_{1}^{3} \left| C_{p(s)} - \bar{C}_p(\text{A OR B}) \right|}{3} \leftarrow \text{MUST BE} \leq 0.01$$

$$\left| \bar{C}_p \text{ (SIDE A)} - \bar{C}_p \text{ (SIDE B)} \right| \leftarrow \text{MUST BE} \leq 0.01$$

Figure 2-9. Pitot tube calibration data.

$$C_{p(s)} = C_{p(std)} \sqrt{\frac{\Delta p_{std}}{\Delta p_s}}$$

Equation 2-2

Where:

$C_{p(s)}$=Type S pitot tube coefficient

$C_{p(std)}$=Standard pitot tube coefficient; use 0.99 if the coefficient is unknown and the tube is designed according to the criteria of Sections 2.7.1 to 2.7.5 of this method.

Δp_{std}=Velocity head measured by the standard pitot tube, cm H_2O (in. H_2O)

Δp_s=Velocity head measured by the Type S pitot tube, cm H_2O (in. H_2O)

4.1.4.2 Calculate $C_{\bar{p}}$ (side A), the mean A-side coefficient, and C_p (side B), the mean B-side coefficient: calculate the difference between these two average values.

4.1.4.3 Calculate the deviation of each of the three A-side values of $C_{p(s)}$ from C_p (side A), and the deviation of each B-side value of $C_{p(s)}$ from C_p (side B). Use the following equation:

$$\text{Deviation} = C_{p(s)} - \bar{C}_p(\text{A or B})$$

Equation 2–3

4.1.4.4 Calculate σ, the average deviation from the mean, for both the A and B sides of the pitot tube. Use the following equation:

$$\sigma\,(\text{side A or B}) = \frac{\sum_{1}^{3} |C_{p(s)} - \bar{C}_p(A \text{ or } B)|}{3}$$

Equation 2–4

4.1.4.5 Use the Type S pitot tube only if the values of σ (side A) and σ (side B) are less than or equal to 0.01 and if the absolute value of the difference between C_p (A) and C_p (B) is 0.01 or less.

4.1.5 Special considerations.

4.1.5.1 Selection of calibration point.

4.1.5.1.1 When an isolated Type S pitot tube is calibrated, select a calibration point at or near the center of the duct, and follow the procedures outlined in Sections 4.1.3 and 4.1.4 above. The Type S pitot coefficients so obtained, i.e., C_p (side A) and C_p (side B), will be valid, so long as either: (1) the isolated pitot tube is used; or (2) the pitot tube is used with other components (nozzle, thermocouple, sample probe) in an arrangement that is free from aerodynamic interference effects (see Figures 2–6 through 2–8).

4.1.5.1.2 For Type S pitot tube-thermocouple combinations (without sample probe), select a calibration point at or near the center of the duct, and follow the procedures outlined in Sections 4.1.3 and 4.1.4 above. The coefficients so obtained will be valid so long as the pitot tube-thermocouple combination is used by itself or with other components in an interference-free arrangement (Figures 2–6 and 2–8).

4.1.5.1.3 For assemblies with sample probes, the calibration point should be located at or near the center of the duct; however, insertion of a probe sheath into a small duct may cause significant cross-sectional area blockage and yield incorrect coefficient values (Citation 9 in Bibliography). Therefore, to minimize the blockage effect, the calibration point may be a few inches off-center if necessary. The actual blockage effect will be negligible when the theoretical blockage, as determined by a projected-area model of the probe sheath, is 2 percent or less of the duct cross-sectional area for assemblies without external sheaths (Figure 2–10a), and 3 percent or less for assemblies with external sheaths (Figure 2–10b).

4.1.5.2 For those probe assemblies in which pitot tube-nozzle interference is a factor (i.e., those in which the pitot-nozzle separation distance fails to meet the specification illustrated in Figure 2–6a), the value of $C_{p(s)}$ depends upon the amount of free-space between the tube and nozzle, and therefore is a function of nozzle size. In these instances, separate calibrations shall be performed with each of the commonly used nozzle sizes in place. Note that the single-velocity calibration technique is acceptable for this purpose, even though the larger nozzle sizes (>0.635 cm or ¼ in.) are not ordinarily used for isokinetic sampling at velocities around 915 m/min (3,000 ft/min), which is the calibration velocity; note also that it is not necessary to draw an isokinetic sample during calibration (see Citation 19 in Section 6).

4.1.5.3 For a probe assembly constructed such that its pitot tube is always used in the same orientation, only one side of the pitot tube need be calibrated (the side which will face the flow). The pitot tube must still meet the alignment specifications of Figure 2–2 or 2–3, however, and must have an average deviation (σ) value of 0.01 or less (see Section 4.1.4.4).

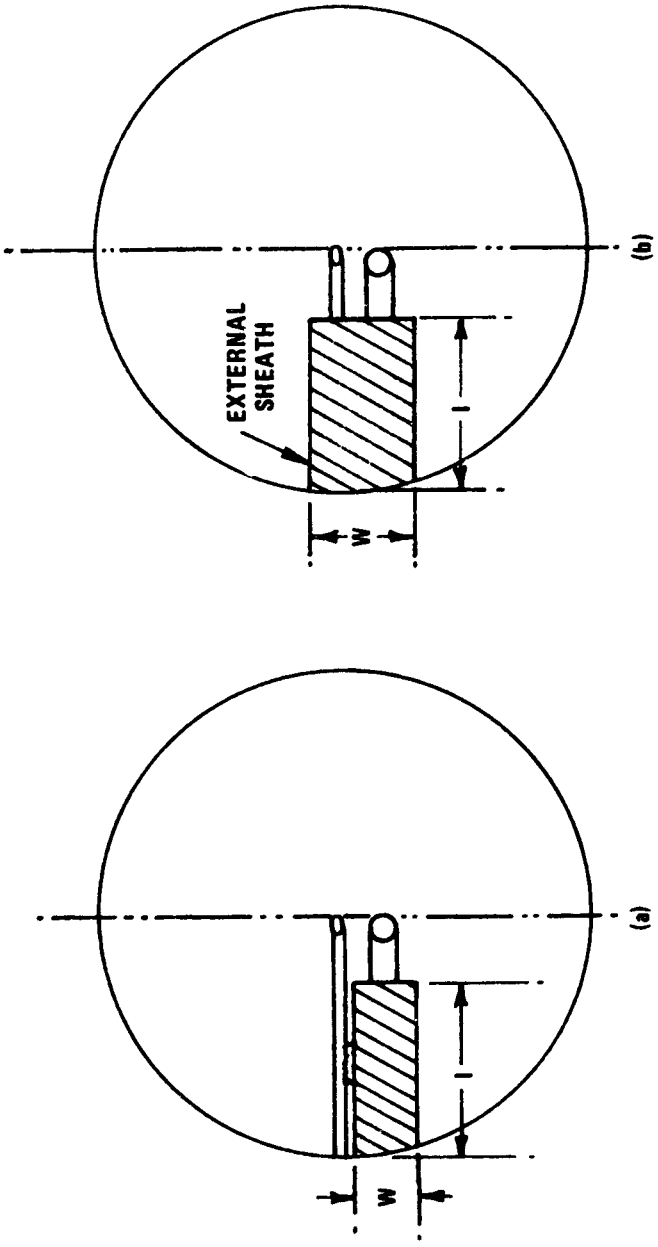

Figure 2-10. Projected-area models for typical pitot tube assemblies.

4.1.6 Field Use and Recalibration.

4.1.6.1 Field Use.

4.1.6.1.1 When a Type S pitot tube (isolated tube or assembly) is used in the field, the appropriate coefficient value (whether assigned or obtained by calibration) shall be used to perform velocity calculations. For

calibrated Type S pitot tubes, the A side coefficient shall be used when the A side of the tube faces the flow, and the B side coefficient shall be used when the B side faces the flow; alternatively, the arithmetic average of the A and B side coefficient values may be used, irrespective of which side faces the flow.

4.1.6.1.2 When a probe assembly is used to sample a small duct (12 to 36 in. in diameter), the probe sheath sometimes blocks a significant part of the duct cross-section, causing a reduction in the effective value of $C_{p(s)}$. Consult Citation 9 in Bibliography for details. Conventional pitot-sampling probe assemblies are not recommended for use in ducts having inside diameters smaller than 12 inches (Citation 16 in Bibliography).

4.1.6.2 Recalibration.

4.1.6.2.1 Isolated Pitot Tubes. After each field use, the pitot tube shall be carefully reexamined in top, side, and end views. If the pitot face openings are still aligned within the specifications illustrated in Figure 2–2 or 2–3, it can be assumed that the baseline coefficient of the pitot tube has not changed. If, however, the tube has been damaged to the extent that it no longer meets the specifications of Figure 2–2 or 2–3, the damage shall either be repaired to restore proper alignment of the face openings or the tube shall be discarded.

4.1.6.2.2 Pitot Tube Assemblies. After each field use, check the face opening alignment of the pitot tube, as in Section 4.1.6.2.1; also, remeasure the intercomponent spacings of the assembly. If the intercomponent spacings have not changed and the face opening alignment is acceptable, it can be assumed that the coefficient of the assembly has not changed. If the face opening alignment is no longer within the specifications of Figures 2–2 or 2–3, either repair the damage or replace the pitot tube (calibrating the new assembly, if necessary). If the intercomponent spacings have changed, restore the original spacings or recalibrate the assembly.

4.2 Standard pitot tube (if applicable). If a standard pitot tube is used for the velocity traverse, the tube shall be constructed according to the criteria of Section 2.7 and shall be assigned a baseline coefficient value of 0.99. If the standard pitot tube is used as part of an assembly, the tube shall be in an interference-free arrangement (subject to the approval of the Administrator).

4.3 Temperature Gauges. After each field use, calibrate dial thermometers, liquid-filled bulb thermometers, thermocouple-potentiometer systems, and other gauges at a temperature within 10 percent of the average absolute stack temperature. For temperatures up to 405 °C (761 °F), use an ASTM mercury-in-glass reference thermometer, or equivalent, as a reference; alternatively, either a reference thermocouple and potentiometer (calibrated by NBS) or thermometric fixed points, e.g., ice bath and boiling water (corrected for barometric pressure) may be used. For temperatures above 405 °C (761 °F), use an NBS-calibrated reference thermocouple-potentiometer system or an alternate reference, subject to the approval of the Administrator.

If, during calibration, the absolute temperatures measured with the gauge being calibrated and the reference gauge agree within 1.5 percent, the temperature data taken in the field shall be considered valid. Otherwise, the pollutant emission test shall either be considered invalid or adjustments (if appropriate) of the test results shall be made, subject to the approval of the Administrator.

4.4 Barometer. Calibrate the barometer used against a mercury barometer.

5. *Calculations*

Carry out calculations, retaining at least one extra decimal figure beyond that of the acquired data. Round off figures after final calculation.

5.1 Nomenclature.

A=Cross-sectional area of stack, $m^2(ft^2)$.

B_{ws}=Water vapor in the gas stream (from Method 5 or Reference Method 4), proportion by volume.

C_p=Pitot tube coefficient, dimensionless.

K_p=Pitot tube constant,

$$34.97 \frac{m}{sec}\left[\frac{(g/g\text{-mole})(mm\ Hg)}{(°K)(mm\ H_2O)}\right]^{1/2}$$

for the metric system and

$$85.49 \frac{ft}{sec}\left[\frac{(lb/lb\text{-mole})(in.\ Hg)}{(°R)(in.\ H_2O)}\right]^{1/2}$$

for the English system.

M_d=Molecular weight of stack gas, dry basis (see Section 3.6) g/g-mole (lb/lb-mole).

M_s=Molecular weight of stack gas, wet basis, g/g-mole (lb/lb-mole).

$=M_d\ (1-B_{ws})+18.0\ B_{ws}$

Eq. 2–5

P_{bar}=Barometric pressure at measurement site, mm Hg (in. Hg).

P_g=Stack static pressure, mm Hg (in. Hg).

P_s=Absolute stack gas pressure, mm Hg (in. Hg).

$=P_{bar}+P_g$

Eq. 2–6

P_{std}=Standard absolute pressure, 760 mm Hg (29.92 in. Hg).

Q_{sd}=Dry volumetric stack gas flow rate corrected to standard conditions, dscm/hr (dscf/hr).

t_s=Stack temperature, °C (°F).

T_s=Absolute stack temperature, °K, (°R).

$=273+t_s$ for metric.

Eq. 2–7

$=460+t_s$ for English.

Eq. 2–8

T_{std}=Standard absolute temperature, 293 °K (528° R).

v_s=Average stack gas velocity, m/sec (ft/sec).

Δp=Velocity head of stack gas, mm H_2O (in. H_2O).

3,600=Conversion factor, sec/hr.

18.0=Molecular weight of water, g/g-mole (lb/lb-mole).

5.2 Average Stack Gas Velocity.

$$v_s = K_p C_p (\sqrt{\Delta p})_{avg} \sqrt{\frac{T_{s(avg)}}{P_s M_s}}$$

Equation 2–9

5.3 Average Stack Gas Dry Volumetric Flow Rate.

$$Q_{sd} = 3{,}600\left(1 - B_{ws}\right) v_s A \frac{T_{std}}{T_{s(avg)}} \frac{P_s}{P_{std}} \qquad \text{Eq. 2-10}$$

To convert Q_{sd} from dscm/hr (dscf/hr) to dscm/min (dscf/min), divide Q_{sd} by 60.

6. *Bibliography*

1. Mark, L. S. Mechanical Engineers' Handbook. New York, McGraw-Hill Book Co., Inc. 1951.

2. Perry, J. H. Chemical Engineers' Handbook. New York. McGraw-Hill Book Co., Inc. 1960.

3. Shigehara, R. T., W. F. Todd, and W. S. Smith. Significance of Errors in Stack Sampling Measurements. U.S. Environmental Protection Agency, Research Triangle Park, NC (Presented at the Annual Meeting of the Air Pollution Control Association, St. Louis, MO, June 14–19, 1970.)

4. Standard Method for Sampling Stacks for Particulate Matter. In: 1971 Book of ASTM Standards, Part 23. Philadelphia, PA 1971. ASTM Designation D–2928–71.

5. Vennard, J. K. Elementary Fluid Mechanics. New York. John Wiley and Sons, Inc. 1947.

6. Fluid Meters—Their Theory and Application. American Society of Mechanical Engineers, New York, NY 1959.

7. ASHRAE Handbook of Fundamentals. 1972. p. 208.

8. Annual Book of ASTM Standards, Part 26. 1974. p. 648.

9. Vollaro, R. F. Guidelines for Type S Pitot Tube Calibration. U.S. Environmental Protection Agency. Research Triangle Park, NC (Presented at 1st Annual Meeting, Source Evaluation Society, Dayton, OH, September 18, 1975.)

10. Vollaro, R. F. A Type S Pitot Tube Calibration Study. U.S. Environmental Protection Agency, Emission Measurement Branch, Research Triangle Park, NC July 1974.

11. Vollaro, R. F. The Effects of Impact Opening Misalignment on the Value of the Type S Pitot Tube Coefficient. U.S. Environmental Protection Agency, Emission Measurement Branch, Research Triangle Park, NC. October 1976.

12. Vollaro, R. F. Establishment of a Basline Coefficient Value for Properly Constructed Type S Pitot Tubes. U.S. Environmental Protection Agency, Emission Measurement Branch, Research Triangle Park, NC. November 1976.

13. Vollaro, R. F. An Evaluation of Single-Velocity Calibration Technique as a Means of Determining Type S Pitot Tubes Coefficient. U.S. Environmental Protection Agency, Emission Measurement Branch, Research Triangle Park, NC. August 1975.

14. Vollaro, R. F. The Use of Type S Pitot Tubes for the Measurement of Low Velocities. U.S. Environmental Protection Agency, Emission Measurement Branch, Research Triangle Park, NC. November 1976.

15. Smith, Marvin L. Velocity Calibration of EPA Type Source Sampling Probe. United Technologies Corporation, Pratt and Whitney Aircraft Division, East Hartford, CN. 1975.

16. Vollaro, R. F. Recommended Procedure for Sample Traverses in Ducts Smaller than 12 Inches in Diameter. U.S. Environmental Protection Agency, Emission Measurement Branch, Research Triangle Park, NC. November 1976.

17. Ower, E. and R. C. Pankhurst. The Measurement of Air Flow, 4th Ed., London, Pergamon Press. 1966.

18. Vollaro, R. F. A Survey of Commercially Available Instrumentation for the Measurement of Low-Range Gas Velocities. U.S. Environmental Protection Agency, Emission Measurement Branch, Research Triangle Park, NC. November 1976. (Unpublished Paper)

19. Gnyp, A. W., C. C. St. Pierre, D. S. Smith, D. Mozzon, and J. Steiner. An Experimental Investigation of the Effect of Pitot Tube-Sampling Probe Configurations on the Magnitude of the S Type Pitot Tube Coefficient for Commercially Available Source Sampling Probes. Prepared by the University of Windsor for the Ministry of the Environment, Toronto, Canada. February 1975.

METHOD 2A—DIRECT MEASUREMENT OF GAS VOLUME THROUGH PIPES AND SMALL DUCTS

1. *Applicability and Principle*

1.1 Applicability. This method applies to the measurement of gas flow rates in pipes and small ducts, either in-line or at exhaust positions, within the temperature range of 0 to 50 °C.

1.2 Principle. A gas volume meter is used to measure gas volume directly. Temperature and pressure measurements are made to correct the volume to standard conditions.

2. *Apparatus*

Specifications for the apparatus are given below. Any other apparatus that has been demonstrated (subject to approval of the Administrator) to be capable of meeting the specifications will be considered acceptable.

2.1 Gas Volume Meter. A positive displacement meter, turbine meter, or other direct volume measuring device capable of measuring volume to within 2 percent. The meter shall be equipped with a temperature gauge (±2 percent of the minimum absolute temperature) and a pressure gauge (±2.5 mm Hg). The manufacturer's recommended capacity of the meter shall be sufficient for the expected maximum and minimum flow rates at the sampling conditions. Temperature, pressure, corrosive characteristics, and pipe size are factors necessary to consider in choosing a suitable gas meter.

2.2 Barometer. A mercury, aneroid, or other barometer capable of measuring atmospheric pressure to within 2.5 mm Hg. In many cases, the barometric reading may be obtained from a nearby National Weather Service station, in which case the station value (which is the absolute barometric pressure) shall be requested, and an adjustment for elevation differences between the weather station and the sampling point shall be applied at a rate of minus 2.5 mm Hg per 30-meter elevation increase, or vice-versa for elevation decrease.

2.3 Stopwatch. Capable of measurement to within 1 second.

3. *Procedure*

3.1 Installation. As there are numerous types of pipes and small ducts that may be subject to volume measurement, it would be difficult to describe all possible installation schemes. In general, flange fittings should be used for all connections wherever possible. Gaskets or other seal materials should be used to assure leak-tight connections. The volume meter should be located so as to avoid severe vibrations and other factors that may affect the meter calibration.

3.2 Leak Test. A volume meter installed at a location under positive pressure may be leak-checked at the meter connections by using a liquid leak detector solution containing a surfactant. Apply a small amount of the solution to the connections. If a leak exists, bubbles will form, and the leak must be corrected.

A volume meter installed at a location under negative pressure is very difficult to test for leaks without blocking flow at the inlet of the line and watching for meter movement. If this procedure is not possible, visually check all connections and assure tight seals.

3.3 Volume Measurement.

3.3.1 For sources with continuous, steady emission flow rates, record the initial meter volume reading, meter temperature(s), meter pressure, and start the stopwatch. Throughout the test period, record the meter temperature(s) and pressure so that average values can be determined. At the end of the test, stop the timer and record the elapsed time, the final volume reading, meter temperature(s), and pressure. Record the barometric pressure at the beginning and end of the test run. Record the data on a table similar to Figure 2A–1.

Plant_____

Date_____ Run Number_____

Sample Location_____

Barometric Pressure mm Hg Start_____ Finish_____

Operators_____

Meter Number_____ Meter Calibration Coefficient_____

Last Date Calibrated_____

Time	Volume	Static pressure	Temperature	
Run/clock	Meter reading	mm Hg	°C	°K
Average				

Figure 2A-1. Volume flow rate measurement data.

3.3.2 For sources with noncontinuous, non-steady emission flow rates, use the procedure in 3.3.1 with the addition of the following: Record all the meter parameters and the start and stop times corresponding to each process cyclical or noncontinuous event.

4. *Calibration*

4.1 Volume Meter. The volume meter is calibrated against a standard reference meter prior to its initial use in the field. The reference meter is a spirometer or liquid displacement meter with a capacity consistent with that of the test meter.

Alternatively, a calibrated, standard pitot may be used as the reference meter in conjunction with a wind tunnel assembly. Attach the test meter to the wind tunnel so that the total flow passes through the test meter. For each calibration run, conduct a 4-point traverse along one stack diameter at a position at least eight diameters of straight tunnel downstream and two diameters upstream of any bend, inlet, or air mover. Determine the traverse point locations as specified in Method 1. Calculate the reference volume using the velocity values following the procedure in Method 2, the wind tunnel cross-sectional area, and the run time.

Set up the test meter in a configuration similar to that used in the field installation (i.e., in relation to the flow moving device). Connect the temperature and pressure gauges as they are to be used in the field. Connect the reference meter at the inlet of the flow line, if appropriate for the meter, and begin gas flow through the system to condition the meters. During this conditioning operation, check the system for leaks.

The calibration shall be run over at least three different flow rates. The calibration flow rates shall be about 0.3, 0.6, and 0.9 times the test meter's rated maximum flow rate.

For each calibration run, the data to be collected include: reference meter initial and final volume readings, the test meter initial and final volume reading, meter average temperature and pressure, barometric pressure, and run time. Repeat the runs at each flow rate at least three times.

Calculate the test meter calibration coefficient, Y_m, for each run as follows:

$$Y_m = \frac{(V_{rf} - V_{ri})(t_r + 273)}{(V_{mf} - V_{mi})(t_m + 273)} \frac{P_b}{(P_b + P_g)} \qquad \text{Eq. 2A-1}$$

Where:

Y_m=Test volume meter calibration coefficient, dimensionless.
V_r=Reference meter volume reading, m^3.
V_m=Test meter volume reading, m^3.
t_r=Reference meter average temperature, ° C.
t_m=Test meter average temperature, ° C.
P_b=Barometric pressure, mm Hg.
P_g=Test meter average static pressure, mm Hg.
f=Final reading for run.
i=Initial reading for run.

Compare the three Y_m values at each of the flow rates tested and determine the maximum and minimum values. The difference between the maximum and minimum values at each flow rate should be no greater than 0.030. Extra runs may be required to complete this requirement. If this specification cannot be met in six successive runs, the test meter is not suitable for use. In addition, the meter coefficients should be between 0.95 and 1.05. If these specifications are met at all the flow rates, average all the Y_m values from runs meeting the specifications to obtain an average meter calibration coefficient, Y_m.

The procedure above shall be performed at least once for each volume meter. Thereafter, an abbreviated calibration check shall be completed following each field test. The calibration of the volume meter shall be checked by performing three calibration runs at a single, intermediate flow rate (based on the previous field test) with the meter pressure set at the average value encountered in the field test. Calculate the average value of the calibration factor. If the calibration has changed by more than 5 percent, recalibrate the meter over the full range of flow as described above.

NOTE. If the volume meter calibration coefficient values obtained before and after a test series differ by more than 5 percent, the test series shall either be voided, or calculations for the test series shall be performed using whichever meter coefficient value (i.e., before or after) gives the greater value of pollutant emission rate.

4.2 Temperature Gauge. After each test series, check the temperature gauge at ambient temperature. Use an American Society for Testing and Materials (ASTM) mercury-in-glass reference thermometer, or equivalent, as a reference. If the gauge being checked agrees within 2 percent (absolute temperature) of the reference, the temperature data collected in the field shall be considered valid. Otherwise, the test data shall be considered invalid or adjustments of the test results shall be made, subject to the approval of the Administrator.

4.3 Barometer. Calibrate the barometer used against a mercury barometer prior to the field test.

5. *Calculations*

Carry out the calculations, retaining at least one extra decimal figure beyond that of

the acquired data. Round off figures after the final calculation.

5.1 Nomenclature.

P_b=Barometric pressure, mm Hg.

P_g=Average static pressure in volume meter, mm Hg.

Q_s=Gas flow rate, m^3/min, standard conditions.

T_m=Average absolute meter temperature, °K.

V_m=Meter volume reading, m^3.

Y_m=Average meter calibration coefficient, dimensionless.

f=Final reading for test period.

i=Initial reading for test period.

s=Standard conditions, 20 °C and 760 mm Hg.

Θ=Elapsed test period time, min.

5.2 Volume.

$$V_{ms} = 0.3853\, Y_m \left(V_{mf} - V_{mi}\right) \frac{\left(P_b + P_g\right)}{T_m} \qquad \text{Eq. 2A-2}$$

5.3 Gas Flow Rate.

$$Q_s = \frac{V_{ms}}{\theta} \qquad \text{Eq. 2A-3}$$

6. *Bibliography*

1. Rom, Jerome J. Maintenance, Calibration, and Operation of Isokinetic Source Sampling Equipment. U.S. Environmental Protection Agency. Research Triangle Park, NC, Publication No. APTD–0576. March 1972.

2. Wortman, Martin, R. Vollaro, and P.R. Westlin. Dry Gas Volume Meter Calibrations. Source Evaluation Society Newsletter. Vol. 2, No. 2. May 1977.

3. Westlin, P.R. and R.T. Shigehara. Procedure for Calibrating and Using Dry Gas Volume Meters as Calibration Standards. Source Evaluation Society Newsletter. Vol. 3, No. 1. February 1978.

METHOD 2B—DETERMINATION OF EXHAUST GAS VOLUME FLOW RATE FROM GASOLINE VAPOR INCINERATORS

1. *Applicability and Principle*

1.1 Applicability. This method applies to the measurement of exhaust volume flow rate from incinerators that process gasoline vapors consisting primarily of alkanes, alkenes, and/or arenes (aromatic hydrocarbons). It is assumed that the amount of auxiliary fuel is negligible.

1.2 Principle. The incinerator exhaust flow rate is determined by carbon balance. Organic carbon concentration and volume flow rate are measured at the incinerator inlet. Organic carbon, carbon dioxide (CO_2), and carbon monoxide (CO) concentrations are measured at the outlet. Then the ratio of total carbon at the incinerator inlet and outlet is multiplied by the inlet volume to determine the exhaust volume and volume flow rate.

2. *Apparatus*

2.1 Volume Meter. Equipment described in Method 2A.

2.2 Organic Analyzers (2). Equipment described in Method 25A or 25B.

2.3 CO Analyzer. Equipment described in Method 10.

2.4 CO_2 Analyzer. A nondispersive infrared (NDIR) CO_2 analyzer and supporting equipment with comparable specifications as CO analyzer described in Method 10.

3. *Procedure*

3.1 Inlet Installation. Install a volume meter in the vapor line to incinerator inlet according to the procedure in Method 2A. At the volume meter inlet, install a sample probe as described in Method 25A. Connect to the probe a leak-tight, heated (if necessary to prevent condensation) sample line (stainless steel or equivalent) and an organic analyzer system as described in Method 25A or 25B.

3.2 Exhaust Installation. Three sample analyzers are required for the incinerator exhaust: CO_2, CO, and organic analyzers. A sample manifold with a single sample probe may be used. Install a sample probe as described in Method 25A. Connect a leak-tight heated sample line to the sample probe. Heat the sample line sufficiently to prevent any condensation.

3.3 Recording Requirements. The output of each analyzer must be permanently recorded on an analog strip chart, digital recorder, or other recording device. The chart speed or number of readings per time unit must be similar for all analyzers so that data can be correlated. The minimum data recording requirement for each analyzer is one measurement value per minute.

3.4 Preparation. Prepare and calibrate all equipment and analyzers according to the procedures in the respective methods. For the CO_2 analyzer, follow the procedures described in Method 10 for CO analysis substituting CO_2 calibration gas where the method calls for CO calibration gas. The span value for the CO_2 analyzer shall be 15 percent by volume. All calibration gases must be introduced at the connection between the probe and the sample line. If a

manifold system is used for the exhaust analyzers, all the analyzers and sample pumps must be operating when the calibrations are done. Note: For the purposes of this test, methane should not be used as an organic calibration gas.

3.5 Sampling. At the beginning of the test period, record the initial parameters for the inlet volume meter according to the procedures in Method 2A and mark all of the recorder strip charts to indicate the start of the test. Continue recording inlet organic and exhaust CO_2, CO, and organic concentrations throughout the test. During periods of process interruption and halting of gas flow, stop the timer and mark the recorder strip charts so that data from this interruption are not included in the calculations. At the end of the test period, record the final parameters for the inlet volume meter and mark the end on all of the recorder strip charts.

3.6 Post Test Calibrations. At the conclusion of the sampling period, introduce the calibration gases as specified in the respective reference methods. If an analyzer output does not meet the specifications of the method, invalidate the test data for the period. Alternatively, calculate the volume results using initial calibration data and using final calibration data and report both resulting volumes. Then, for emissions calculations, use the volume measurement resulting in the greatest emission rate or concentration.

4. *Calculations*

Carry out the calculations, retaining at least one extra decimal figure beyond that of the acquired data. Round off figures after the final calculation.

4.1 Nomenclature.

CO_e=Mean carbon monoxide concentration in system exhaust, ppm.

CO_{2e}=Mean carbon dioxide concentration in system exhaust, ppm.

HC_e=Mean organic concentration in system exhaust as defined by the calibration gas, ppm.

HC_i=Mean organic concentration in system inlet as defined by the calibration gas, ppm.

K=Calibration gas factor
=2 for ethane calibration gas.
=3 for propane calibration gas.
=4 for butane calibration gas.
=Appropriate response factor for other calibration gas.

V_{es}=Exhaust gas volume, m^3.

V_{is}=Inlet gas volume, m^3.

Q_{es}=Exhaust gas volume flow rate, m^3/min.

Q_{is}=Inlet gas volume flow rate, m^3/min.

Θ=Sample run time, min.

s=Standard conditions: 20 °C, 760 mm Hg.

300=Estimated concentration of ambient CO_2, ppm. (CO_2 concentration in the ambient air may be measured during the test period using an NDIR).

4.2 Concentrations. Determine mean concentrations of inlet organics, outlet CO_2, outlet CO, and outlet organics according to the procedures in the respective methods and the analyzers' calibration curves, and for the time intervals specified in the applicable regulations. Concentrations should be determined on a parts per million by volume (ppm) basis.

4.3 Exhaust Gas Volume. Calculate the exhaust gas volume as follows:

$$V_{es} = V_{is}\frac{K(HC_i)}{K(HC_e) + CO_{2e} + CO_e - 300} \qquad \text{Eq. 2B-1}$$

4.4 Exhaust Gas Volume Flow Rate. Calculate the exhaust gas volume flow rate as follows:

$Q_{es}=V_{es}/\theta$ Eq. 2B–2

5. *Bibliography*

1. Measurement of Volatile Organic Compounds. U.S. Environmental Protection Agency. Office of Air Quality Planning and Standards, Research Triangle Park, NC 27711. Publication No. EPA–450/2–78–041. October 1978. 55 p.

METHOD 2C—DETERMINATION OF STACK GAS VELOCITY AND VOLUMETRIC FLOW RATE IN SMALL STACKS OR DUCTS (STANDARD PITOT TUBE)

1. Applicability and Principle

1.1 Applicability.

1.1.1 The applicability of this method is identical to Method 2, except this method is limited to stationery source stacks or ducts less than about 0.30 meter (12 in.) in diameter or 0.071 m^2 (113 $in.^2$) in cross-sectional area, but equal to or greater than about 0.10 meter (4 in.) in diameter or 0.0081 m^2 (12.57 $in.^2$) in cross-sectional area.

1.1.2 The apparatus, procedure, calibration, calculations, and biliography are the

same as in Method 2, Sections 2, 3, 4, 5, and 6, except as noted in the following sections.

1.2 Principle. The average gas velocity in a stack or duct is determined from the gas density and from measurement of velocity heads with a standard pitot tube.

2. Apparatus

2.1 Standard Pitot Tube (instead of Type S). Use a standard pitot tube that meets the specifications of Section 2.7 of Method 2. Use a coefficient value of 0.99 unless it is calibrated against another standard pitot tube with an NBS-traceable coefficient.

2.2 Alternative Pitot Tube. A modified hemispherical-nosed pitot tube (see Figure 2C–1), which features a shortened stem and enlarged impact and static pressure holes, may be used. This pitot tube is useful in liquid drop-laden gas streams when a pitot ''back purge'' is ineffective. Use a coefficient value of 0.99 unless the pitot is calibrated as mentioned in Section 2.1 above.

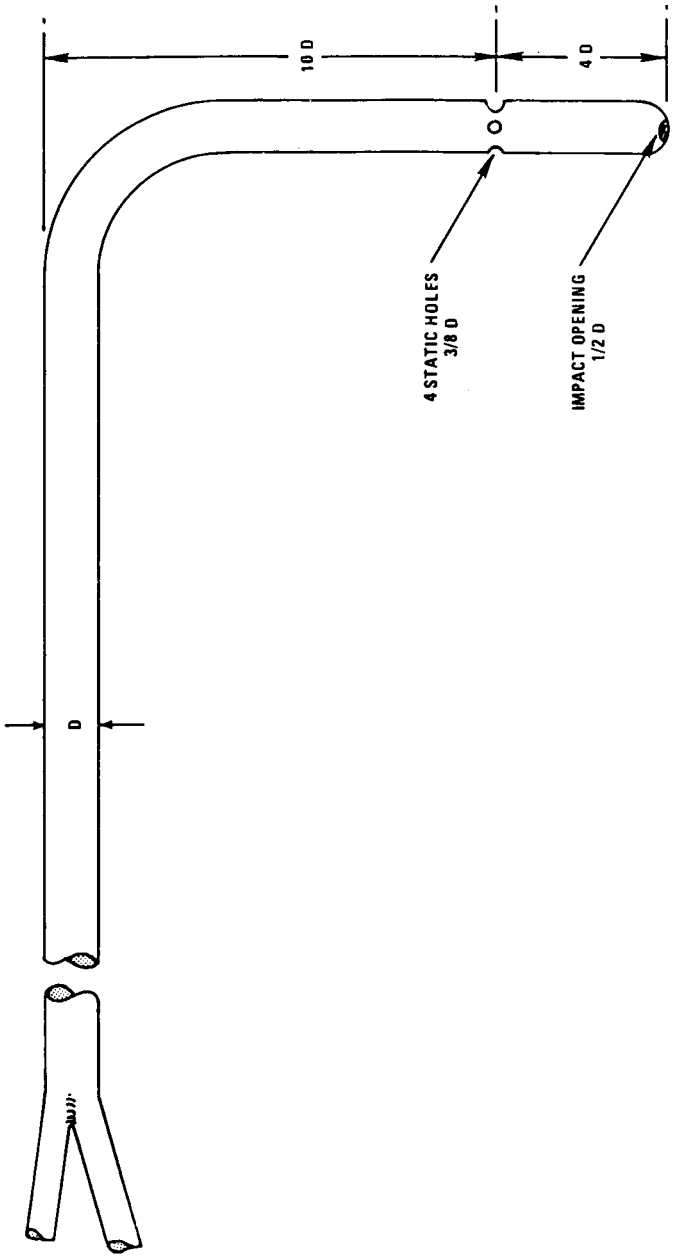

Figure 2C-1. Modified hemispherical-nosed pitot tube.

3. Procedure

Follow the general procedures in Section 3 of Method 2, except conduct the measurements at the traverse points specified in Method 1A. The static and impact pressure holes of standard pitot tubes are susceptible to plugging in PM–laden gas streams. Therefore, the tester must furnish adequate proof

that the openings of the pitot tube have not plugged during the traverse period; this proof can be obained by first recording the velocity head (Δp) reading at the final traverse point, then cleaning out the impact and static holes of the standard pitot tube by ''back-purging'' with pressurized air, and finally by recording another Δp reading at the final traverse point. If the Δp reading made after the air purge is within 5 percent of the reading during the traverse, then the traverse is acceptable. Otherwise, reject the run. Note that if the Δp at the final traverse point is so low as to make this determination too difficult, then another traverse point may be selected. If ''back purging'' at regular intervals is part of the procedure, then take comparative Δp readings, as above, for the last two back purges at which suitable high Δp readings are observed.

METHOD 2D—MEASUREMENT OF GAS VOLUMETRIC FLOW RATES IN SMALL PIPES AND DUCTS

1. Applicability and Principle

1.1 Applicability. This method applies to the measurement of gas flow rates in small pipes and ducts, either before or after emission control devices.

1.2 Principle. To measure flow rate or pressure drop, all the stack gas is directed through a rotameter, orifice plate or similar flow rate measuring device. The measuring device has been previously calibrated in a manner that insures its proper calibration for the gas or gas mixture being measured. Absolute temperature and pressure measurements are also made to calculate volumetric flow rates at standard conditions.

2. Apparatus

Specifications for the apparatus are given below. Any other apparatus that has been demonstrated (subject to approval of the Administrator) to be capable of meeting the specifications will be considered acceptable.

2.1 Flow Rate Measuring Device. A rotameter, orifice plate, or other flow rate measuring device capable of measuring all the stack flow rate to within 5 percent of its true value. The measuring device shall be equipped with a temperature gauge accurate to within 2 percent of the minimum absolute stack temperature and a pressure gauge accurate to within 5 mm Hg. The capacity of the measuring device shall be sufficient for the expected maximum and minimum flow rates at the stack gas conditions. The magnitude and variability of stack gas flow rate, molecular weight, temperature, pressure, compressibility, dew point, corrosiveness, and pipe or duct size are all factors to consider in choosing a suitable measuring device.

2.2 Barometer. Same as in Method 2, Section 2.5.

2.3 Stopwatch. Capable of incremental time measurement to within 1 second.

3. Procedure

3.1 Installation. Use the procedure in Method 2A, Section 3.1.

3.2 Leak Check. Use the procedure in Method 2A, Section 3.2.

3.3 Flow Rate Measurement.

3.3.1 Continuous, Steady Flow. At least once an hour, record the measuring device flow rate reading, and the measuring device temperature and pressure. Make a minimum of twelve equally spaced readings of each parameter during the test period. Record the barometric pressure at the beginning and end of the test period. Record the data on a table similar to Figure 2D–1.

Plant
Date Run number
Sample location
Barometric pressure, mm (in.) Hg
Start Finish
Operators
Measuring device number Calibration coefficient
Calibration gas
Last date calibrated

Time	Flow rate reading	Static pressure mm (in.) Hg	Temperature	
			°C (°F)	°K (°R)
	Average.			

Figure 2D–1. Flow rate measurement data.

3.3.2 Noncontinuous and Nonsteady Flows. Use flow rate measuring devices with particular caution. Calibration will be affected by variation in stack gas temperature, pressure, compressibility, and molecular weight. Use the procedure in Section 3.3.1. Record all the measuring device parameters on a time interval frequency sufficient to adequately profile each process cyclical or noncontinuous event. A multichannel continuous recorder may be used.

4. Calibration

4.1 Flow Rate Measuring Device. Use the procedure in Method 2A, Section 4, and apply the same performance standards. Calibrate the measuring device with the principal stack gas to be measured (e.g., air, nitrogen) against a standard reference meter. A calibrated dry gas meter is an acceptable reference meter. Ideally, calibrate the measuring device in the field with the actual gas to be measured. For measuring devices that have a volume rate readout, calculate the measuring device calibration coefficient, Y_m, for each run as follows:

$$Y_m = \frac{(Q_r)(T_r)P_{bar}}{(Q_m)(T_m)(P_{bar} + P_g)} \qquad \text{Eq. 2D-1}$$

where:

Q_r=reference meter flow rate reading, m^3/min (ft^3/min).

Q_m=measuring device flow rate reading, m^3/min (ft^3/min).

T_r=reference meter average absolute temperature, ° K (° R).

T_m=measuring device average absolute temperature, ° K (° R).

P_{bar}=barometric pressure, mm Hg (in. Hg).

P_g=measuring device average static pressure, mm Hg (in. Hg).

For measuring devices that do not have a readout as flow rate, refer to the manufacturer's instructions to calculate the Q_m corresponding to each Q_r.

4.2 Temperature Gauge. Use the procedure and specifications in Method 2A, Section 4.2. Perform the calibration at a temperature that approximates field test conditions.

4.3 Barometer. Calibrate the barometer to be used in the field test with a mercury barometer prior to the field test.

5. Gas Flow Rate Calculation

Calculate the stack gas flow rate, Q_s, as follows:

$$Q_s = K_1 Y_m Q_m \frac{(P_{bar} + P_g)}{T_m} \qquad \text{Eq. 2D-2}$$

where:

K_1 = 0.3858 for international system of units (SI); 17.64 for English units.

6. Bibliography

1. Spink, L.K. Principles and Practice of Flowmeter Engineering. The Foxboro Company. Foxboro, MA. 1967.

2. Benedict, Robert P. Fundamentals of Temperature, Pressure, and Flow Measurements. John Wiley and Sons, Inc. New York, NY. 1969.

3. Orifice Metering of Natural Gas. American Gas Association. Arlington, VA. Report No. 3. March 1978. 88 p.

METHOD 2E—DETERMINATION OF LANDFILL GAS; GAS PRODUCTION FLOW RATE

1. Applicability and Principle

1.1 Applicability. This method applies to the measurement of landfill gas (LFG) production flow rate from municipal solid waste (MSW) landfills and is used to calculate the flow rate of nonmethane organic compounds (NMOC) from landfills. This method also applies to calculating a site-specific k value as provided in §60.754(a)(4). It is unlikely that a site-specific k value obtained through Method 2E testing will lower the annual emission estimate below 50 Mg/yr NMOC unless the Tier 2 emission estimate is only slightly higher than 50 Mg/yr NMOC. Dry, arid regions may show a more significant difference between the default and calculated k values than wet regions.

1.2 Principle. Extraction wells are installed either in a cluster of three or at five locations dispersed throughout the landfill. A blower is used to extract LFG from the landfill. LFG composition, landfill pressures near the extraction well, and volumetric flow rate of LFG extracted from the wells are measured and the landfill gas production flow rate is calculated.

2. Apparatus

2.1 Well Drilling Rig. Capable of boring a 0.6 meters diameter hole into the landfill to a minimum of 75 percent of the landfill depth. The depth of the well shall not exceed the bottom of the landfill or the liquid level.

2.2 Gravel. No fines. Gravel diameter should be appreciably larger than perforations stated in sections 2.10 and 3.2 of this method.

2.3 Bentonite.

2.4 Backfill Material. Clay, soil, and sandy loam have been found to be acceptable.

2.5 Extraction Well Pipe. Polyvinyl chloride (PVC), high density polyethylene (HDPE), fiberglass, stainless steel, or other suitable nonporous material capable of transporting landfill gas with a minimum diameter of 0.075 meters and suitable wall-thickness.

2.6 Wellhead Assembly. Valve capable of adjusting gas flow at the wellhead and outlet, and a flow measuring device, such as an in-line orifice meter or pitot tube. A schematic of the wellhead assembly is shown in figure 1.

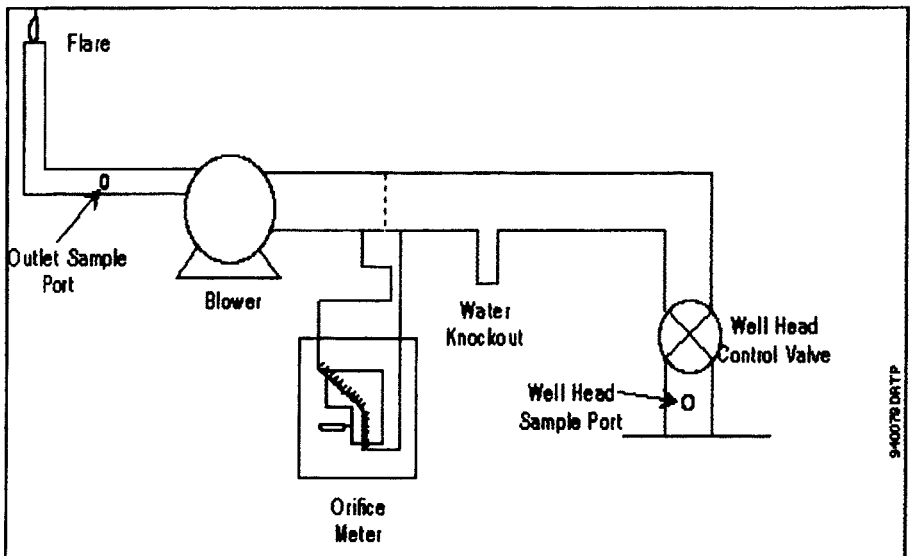

Figure 1. Schematic of above ground well head assembly.

2.7 Cap. PVC, HDPE, fiberglass, stainless steel, or other suitable nonporous material capable of transporting landfill gas with a suitable wall-thickness.

2.8 Header Piping. PVC, HDPE, fiberglass, stainless steel, or other suitable nonporous material capable of transporting landfill gas with a suitable wall-thickness.

2.9 Auger. Capable of boring a 0.15 to 0.23 meters diameter hole to a depth equal to the top of the perforated section of the extraction well, for pressure probe installation.

2.10 Pressure Probe. PVC or stainless steel (316), 0.025 meters. Schedule 40 pipe. Perforate the bottom two thirds. A minimum requirement for perforations is slots or holes with an open area equivalent to four 6.0 millimeter diameter holes spaced 90° apart every 0.15 meters.

2.11 Blower and Flare Assembly. A water knockout, flare or incinerator, and an explosion-proof blower, capable of extracting LFG at a flow rate of at least 8.5 cubic meters per minute.

2.12 Standard Pitot Tube and Differential Pressure Gauge for Flow Rate Calibration with Standard Pitot. Same as Method 2, sections 2.1 and 2.8.

2.13 Gas flow measuring device. Permanently mounted Type S pitot tube or an orifice meter.

2.14 Barometer. Same as Method 4, section 2.1.5.

2.15 Differential Pressure Gauge. Water-filled U-tube manometer or equivalent, capable of measuring within 0.02 mm Hg, for measuring the pressure of the pressure probes.

3. Procedure

3.1 Placement of Extraction Wells. The landfill owner or operator shall either install a single cluster of three extraction wells in a test area or space five wells over the landfill. The cluster wells are recommended but may be used only if the composition, age of the solid waste, and the landfill depth of the test area can be determined. CAUTION: Since this method is complex, only experienced personnel should conduct the test. Landfill gas contains methane, therefore explosive mixtures may exist at or near the landfill. It is advisable to take appropriate safety precautions when testing landfills, such as installing explosion-proof equipment and refraining from smoking.

3.1.1 Cluster Wells. Consult landfill site records for the age of the solid waste, depth, and composition of various sections of the landfill. Select an area near the perimeter of the landfill with a depth equal to or greater than the average depth of the landfill and with the average age of the solid waste between 2 and 10 years old. Avoid areas known to contain nondecomposable materials, such as concrete and asbestos. Locate wells as shown in figure 2.

Because the age of the solid waste in a test area will not be uniform, calculate a weighted average to determine the average age of the solid waste as follows.

$$A_{avg} = \sum_{i=1}^{n} f_i A_i$$

where,

A_{avg}=average age of the solid waste tested, year

f_i=fraction of the solid waste in the ith section

A_i=age of the ith fraction, year

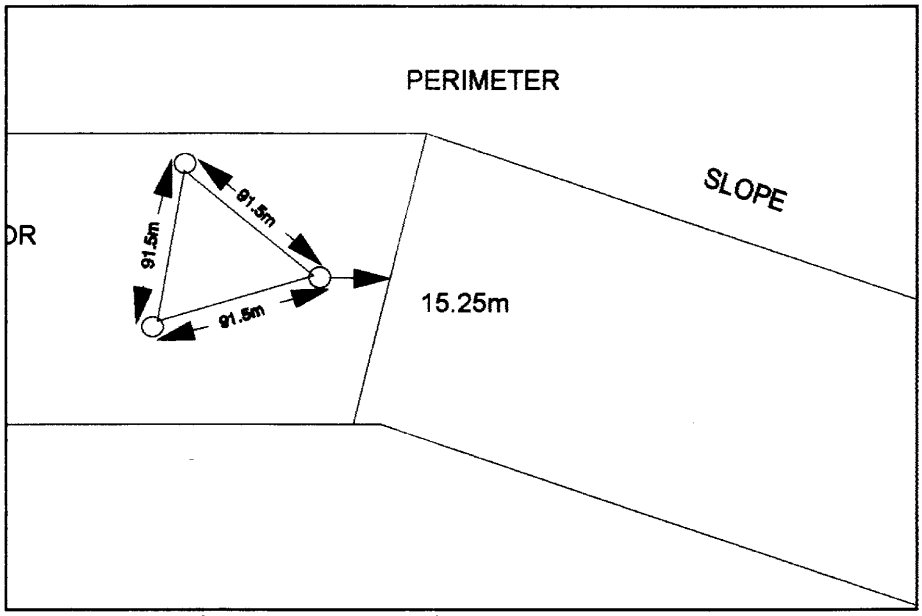

Figure 2. Location of Cluster Wells

3.1.2 Equal Volume Wells. This procedure is used when the composition, age of solid waste, and landfill depth are not well known. Divide the portion of the landfill that has had waste for at least 2 years into five areas representing equal volumes. Locate an extraction well near the center of each area. Avoid areas known to contain nondecomposable materials, such as concrete and asbestos.

3.2 Installation of Extraction Wells. Use a well drilling rig to dig a 0.6 meters diameter hole in the landfill to a minimum of 75 percent of the landfill depth, not to exceed the bottom of the landfill or the water table. Perforate the bottom two thirds of the extraction well pipe. Perforations shall not be closer than 6 meters from the cover. Perforations shall be holes or slots with an open area equivalent to 1.0 centimeter diameter holes spaced 90 degrees apart every 0.1 to 0.2 meters. Place the extraction well in the center of the hole and backfill with 2.0 to 7.5 centimeters gravel to a level 0.3 meters above the perforated section. Add a layer of backfill material 1.2 meters thick. Add a layer of bentonite 1.0 meter thick, and backfill the remainder of the hole with cover material or material equal in permeability to the existing cover material. The specifications for extraction well installation are shown in figure 3.

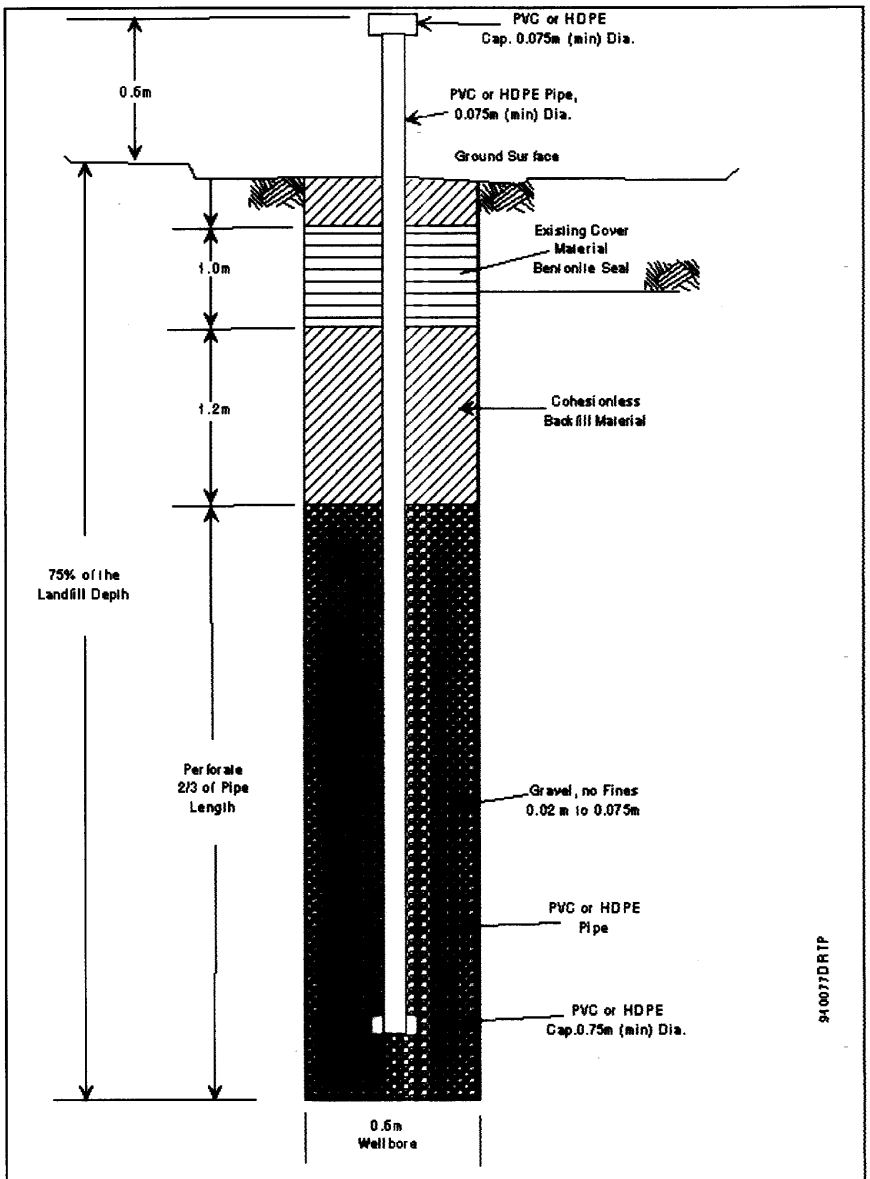

Figure 3. Gas extraction well.

3.3 Pressure Probes. Shallow pressure probes are used in the check for infiltration of air into the landfill, and deep pressure probes are used to determine the radius of influence. Locate the deep pressure probes along three radial arms approximately 120 degrees apart at distances of 3, 15, 30, and 45 meters from the extraction well. The tester

has the option of locating additional pressure probes at distances every 15 meters beyond 45 meters. Example placements of probes are shown in figure 4.

The probes located 15, 30, and 45 meters from each well, and any additional probes located along the three radial arms (deep probes), shall extend to a depth equal to the top of the perforated section of the extraction wells. Locate three shallow probes at a distance of 3 m from the extraction well. Shallow probes shall extend to a depth equal to half the depth of the deep probes.

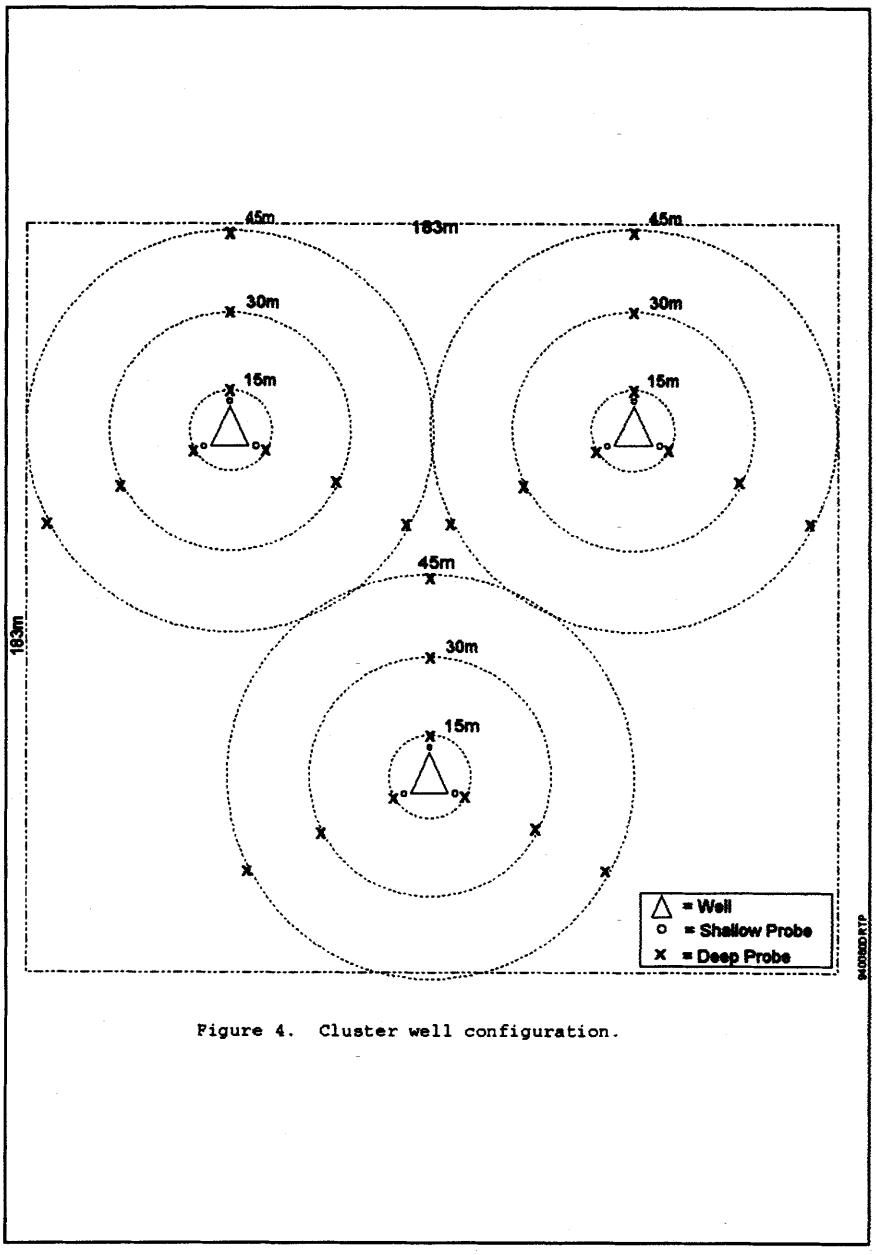

Figure 4. Cluster well configuration.

Use an auger to dig a hole, approximately 0.15 to 0.23 meters in diameter, for each pressure probe. Perforate the bottom two thirds of the pressure probe. Perforations shall be holes or slots with an open area equivalent to four 6.0 millimeter diameter holes spaced 90 degrees apart every 0.15 meters. Place the pressure probe in the center of the hole and

backfill with gravel to a level 0.30 meters above the perforated section. Add a layer of backfill material at least 1.2 meters thick. Add a layer of bentonite at least 0.3 meters thick, and backfill the remainder of the hole with cover material or material equal in permeability to the existing cover material. The specifications for pressure probe installation are shown in figure 5.

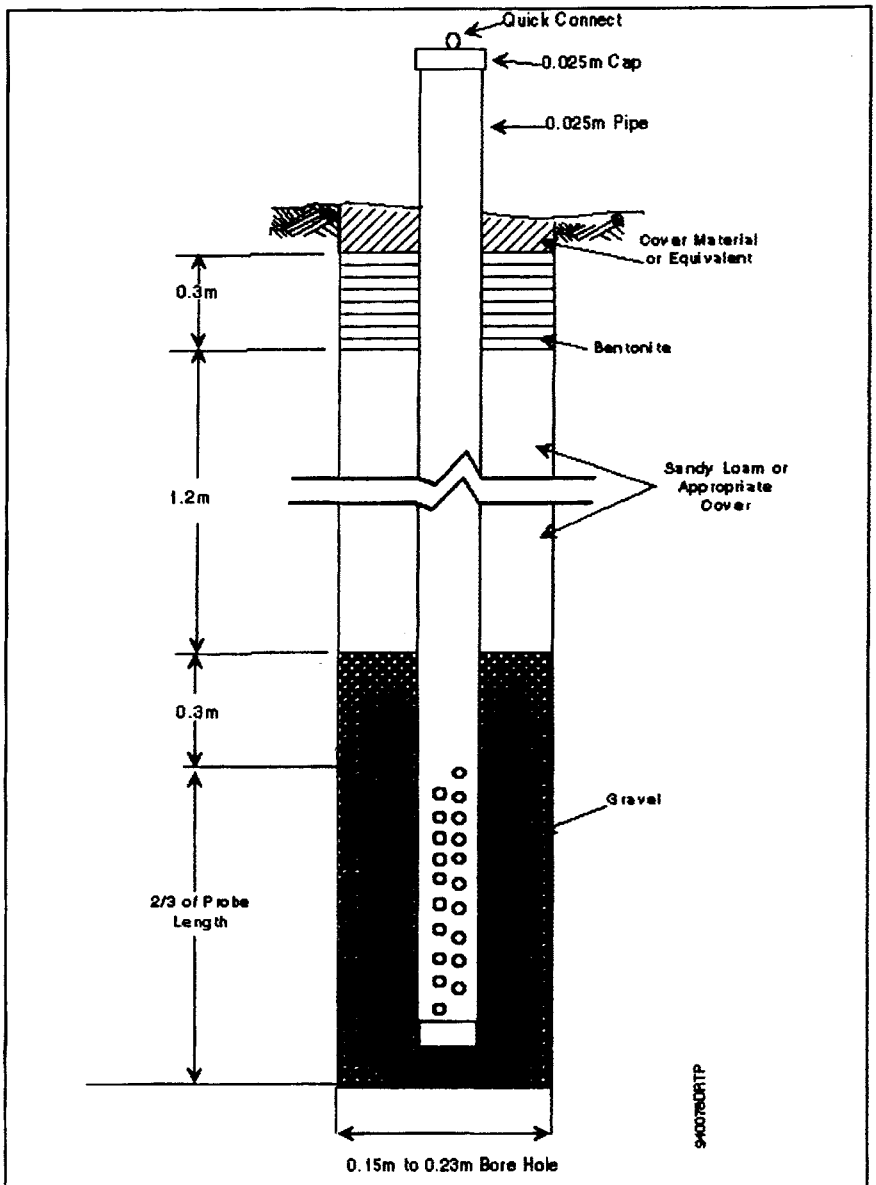

Figure 5. Pressure probe.

3.4 LFG Flow Rate Measurement. Determine the flow rate of LFG from the test wells continuously during testing with an orifice meter. Alternative methods to measure the LFG flow rate may be used with approval of the Administrator. Locate the orifice meter as shown in figure 1. Attach the wells to the blower and flare assembly. The

individual wells may be ducted to a common header so that a single blower and flare assembly and flow meter may be used. Use the procedures in section 4.1 to calibrate the flow meter.

3.5 Leak Check. A leak check of the above ground system is required for accurate flow rate measurements and for safety. Sample LFG at the wellhead sample port and at a point downstream of the flow measuring device. Use Method 3C to determine nitrogen (N_2) concentrations. Determine the difference by using the formula below.

$$\text{Difference} = C_o - C_w$$

where,

C_o=concentration of N_2 at the outlet, ppmv

C_w=concentration of N_2 at the wellhead, ppmv

The system passes the leak check if the difference is less than 10,000 ppmv. If the system fails the leak check, make the appropriate adjustments to the above ground system and repeat the leak check.

3.6 Static Testing. The purpose of the static testing is to determine the initial conditions of the landfill. Close the control valves on the wells so that there is no flow of landfill gas from the well. Measure the gauge pressure (P_g) at each deep pressure probe and the barometric pressure (P_{bar}) every 8 hours for 3 days. Convert the gauge pressure of each deep pressure probe to absolute pressure by using the following equation. Record as P_i.

$$P_i = P_{bar} + P_g$$

where,

P_{bar}=Atmospheric pressure, mm Hg

P_g=Gauge pressure of the deep probes, mm Hg

P_i=Initial absolute pressure of the deep probes during static testing, mm Hg

3.6.1 For each probe, average all of the 8 hr deep pressure probe readings and record as P_{ia}. The P_{ia} is used in section 3.7.6 to determine the maximum radius of influence.

3.6.2 Measure the LFG temperature and the static flow rate of each well once during static testing using a flow measurement device, such as a Type S pitot tube and measure the temperature of the landfill gas. The flow measurements should be made either just before or just after the measurements of the probe pressures and are used in determining the initial flow from the extraction well during the short term testing. The temperature measurement is used in the check for infiltration.

3.7 Short Term Testing. The purpose of short term testing is to determine the maximum vacuum that can be applied to the wells without infiltration of air into the landfill. The short term testing is done on one well at a time. During the short term testing, burn LFG with a flare or incinerator.

3.7.1 Use the blower to extract LFG from a single well at a rate at least twice the static flow rate of the respective well measured in section 3.6.2. If using a single blower and flare assembly and a common header system, close the control valve on the wells not being measured. Allow 24 hours for the system to stabilize at this flow rate.

3.7.2 Check for infiltration of air into the landfill by measuring the temperature of the LFG at the wellhead, the gauge pressures of the shallow pressure probes, and the LFG N_2 concentration by using Method 3C. CAUTION: Increased vacuum at the wellhead may cause infiltration of air into the landfill, which increases the possibility of a landfill fire. Infiltration of air into the landfill may occur if any of the following conditions are met: the LFG N_2 concentration is more than 20 percent, any of the shallow probes have a negative gauge pressure, or the temperature has increased above 55 °C or the maximum established temperature during static testing. If infiltration has not occurred, increase the blower vacuum by 4 mm Hg, wait 24 hours, and repeat the infiltration check. If at any time, the temperature change exceeds the limit, stop the test until it is safe to proceed. Continue the above steps of increasing blower vacuum by 4 mm Hg, waiting 24 hours, and checking for infiltration until the concentration of N_2 exceeds 20 percent or any of the shallow probes have a negative gauge pressure, at which time reduce the vacuum at the wellhead so that the N_2 concentration is less than 20 percent and the gauge pressures of the shallow probes are positive. This is the maximum vacuum at which infiltration does not occur.

3.7.3 At this maximum vacuum, measure P_{bar} every 8 hours for 24 hours and record the LFG flow rate as Q_s and the probe gauge pressures for all of the probes as P_f. Convert the gauge pressures of the deep probes to absolute pressures for each 8-hour reading at Q_s as follows:

$$P = P_{bar} + P_f$$

where,

P_{bar}=Atmospheric pressure, mm Hg

P_f=Final absolute pressure of the deep probes during short term testing, mm Hg

P=Pressure of the deep probes, mm Hg

3.7.4 For each probe, average the 8-hr deep pressure probe readings and record as P_{fa}.

3.7.5 For each probe, compare the initial average pressure (P_{ia}) from section 3.6.1 to the final average pressure (P_{fa}). Determine the furthermost point from the wellhead along each radial arm where $P_{fa} \leq P_{ia}$. This distance is the maximum radius of influence (ROI), which is the distance from the well affected by the vacuum. Average these values to determine the average maximum radius of influence (R_{ma}).

The average R_{ma} may also be determined by plotting on semi-log paper the pressure

differentials (P_{fa}-P_{ia}) on the y-axis (abscissa) versus the distances (3, 15, 30 and 45 meters) from the wellhead on the x-axis (ordinate). Use a linear regression analysis to determine the distance when the pressure differential is zero. Additional pressure probes may be used to obtain more points on the semi-long plot of pressure differentials versus distances.

3.7.6 Calculate the depth (D_{st}) affected by the extraction well during the short term test as follows. If the computed value of D_{st} exceeds the depth of the landfill, set D_{st} equal to the landfill depth.

$D_{st}=WD + R_{ma}^2$

where,

D_{st}=depth, m
WD=well depth, m
R_{ma}=maximum radius of influence, m

3.7.7 Calculate the void volume for the extraction well (V) as follows.

$V=0.40\ R_{ma}^2\ D_{st}$

where,

V=void volume of test well, m^3
R_{ma}=maximum radius of influence, m
D_{st}=depth, m

3.7.8 Repeat the procedures in section 3.7 for each well.

3.8 Calculate the total void volume of the test wells (V_v) by summing the void volumes (V) of each well.

3.9 Long Term Testing. The purpose of long term testing is to determine the methane generation rate constant, k. Use the blower to extract LFG from the wells. If a single blower and flare assembly and common header system are used, open all control valves and set the blower vacuum equal to the highest stabilized blower vacuum demonstrated by any individual well in section 3.7. Every 8 hours, sample the LFG from the wellhead sample port, measure the gauge pressures of the shallow pressure probes, the blower vacuum, the LFG flow rate, and use the criteria for infiltration in section 3.7.2 and Method 3C to check for infiltration. If infiltration is detected, do not reduce the blower vacuum, but reduce the LFG flow rate from the well by adjusting the control valve on the wellhead. Adjust each affected well individually. Continue until the equivalent of two total void volumes (V_v) have been extracted, or until $V_t=2\ V_v$.

3.9.1 Calculate V_t, the total volume of LFG extracted from the wells, as follows.

$$V_t = \sum_{i=1}^{n} 60\ Q_i\ t_{vi}$$

where,

V_t=total volume of LFG extracted from wells, m^3
Q_i=LFG flow rate measured at orifice meter at the ith interval, cubic meters per minute
t_{vi}=time of the ith interval, hour (usually 8)

3.9.2 Record the final stabilized flow rate as Q_f. If, during the long term testing, the flow rate does not stabilize, calculate Q_f by averaging the last 10 recorded flow rates.

3.9.3 For each deep probe, convert each gauge pressure to absolute pressure as in section 3.7.4. Average these values and record as P_{sa}. For each probe, compare P_{ia} to P_{sa}. Determine the furthermost point from the wellhead along each radial arm where $P_{sa} \leq P_{ia}$. This distance is the stabilized radius of influence. Average these values to determine the average stabilized radius of influence (R_{sa}).

3.10 Determine the NMOC mass emission rate using the procedures in section 5.

3.11 Deactivation of pressure probe holes. Upon completion of measurements, if pressure probes are removed, restore the integrity of the landfill cover by backfilling and sealing to prevent venting of LFG to the atmosphere or air infiltration.

4. Calibrations

Gas Flow Measuring Device Calibration Procedure. Locate a standard pitot tube in line with a gas flow measuring device. Use the procedures in Method 2D, section 4, to calibrate the orifice meter. Method 3C may be used to determine the dry molecular weight. It may be necessary to calibrate more than one gas flow measuring device to bracket the landfill gas flow rates. Construct a calibration curve by plotting the pressure drops across the gas flow measuring device for each flow rate versus the average dry gas volumetric flow rate in cubic meters per minute of the gas. Use this calibration curve to determine the volumetric flow from the wells during testing.

5. Calculations

5.1 Nomenclature.

A_{avg}=average age of the solid waste tested, year
A_i=age of solid waste in the ith fraction, year
A=age of landfill, year
A_r=acceptance rate, megagrams per year
C_{NMOC}=NMOC concentration, ppmv as hexane ($C_{NMOC}=C_t/6$)
C_t=NMOC concentration, ppmv (carbon equivalent) from Method 25C
D = depth affected by the test wells, m
D_{st}=depth affected by the test wells in the short term test, m
D_{LF}=landfill depth, m
f = fraction of decomposable solid waste in the landfill
f_i=fraction of the solid waste in the ith section
k=methane generation rate constant, $year^{-1}$
L_o=methane generation potential, cubic meters per megagram
L_o=revised methane generation potential to account for the amount of

nondecomposable material in the landfill, cubic meters per megagram
M_i=mass of solid waste of the ith section, megagrams
M_r=mass of decomposable solid waste affected by the test well, megagrams
M_w=number of wells
P_{bar}=atmospheric pressure, mm Hg
P_g=gauge pressure of the deep pressure probes, mm Hg
P_i=initial absolute pressure of the deep pressure probes during static testing, mm Hg
P_{ia}=average initial absolute pressure of the deep pressure probes during static testing, mm Hg
P_f=final absolute pressure of the deep pressure probes during short term testing, mm Hg
P_{fa}=average final absolute pressure of the deep pressure probes during short term testing, mm Hg
P_s=final absolute pressure of the deep pressure probes during long term testing, mm Hg
P_{sa}=average final absolute pressure of the deep pressure probes during long term testing, mm Hg
Q_B=required blow flow rate, cubic meters per minute
Q_f=final stabilized flow rate, cubic meters per minute
Q_i=LFG flow rate measured at orifice meter during the ith interval, cubic meters per minute
Q_s=maximum LFG flow rate at each well determined by short term test, cubic meters per minute
Q_t=NMOC mass emission rate, cubic meters per minute
R_m=maximum radius of influence, m
R_{ma}=average maximum radius of influence, m
R_s=stabilized radius of influence for an individual well, m
R_{sa}=average stabilized radius of influence, m
t_i=age of section i, year
t_t=total time of long term testing, year
V=void volume of test well, m^3
V_r=volume of solid waste affected by the test well, m^3
V_t=total volume of solid waste affected by the long term testing, m^3
V_v=total void volume affected by test wells, m^3
WD=well depth, m
ρ=solid waste density, m^3 (Assume 0.64 megagrams per cubic meter if data are unavailable)

5.2 Use the following equation to calculate the depth affected by the test well. If using cluster wells, use the average depth of the wells for WD. If the value of D is greater than the depth of the landfill, set D equal to the landfill depth.

$D=WD+R_{sa}$

5.3 Use the following equation to calculate the volume of solid waste affected by the test well.

$V_r=R_{sa}^2 + D$

5.4 Use the following equation to calculate the mass affected by the test well.

$M_r=V_r\rho$

5.5 Modify L_o to account for the nondecomposable solid waste in the landfill.

$L_o'=f\ L_o$

5.6 In the following equation, solve for k by iteration. A suggested procedure is to select a value for k, calculate the left side of the equation, and if not equal to zero, select another value for k. Continue this process until the left hand side of the equation equals zero, #0.001.

$$ke^{-k}A_{avg}-\left(5.256\times10^{5}\right)\frac{Q_f}{2\ L_o'\ M_r}=0$$

5.7 Use the following equation to determine landfill NMOC mass emission rate if the yearly acceptance rate of solid waste has been consistent (±10 percent) over the life of the landfill.

$Q_t = 2\ L_o'\ A_r\ (1 - e^{-k}\ A)\ C_{NMOC} / (5.256 \times 10^{11})$

5.8 Use the following equation to determine landfill NMOC mass emission rate if the acceptance rate has not been consistent over the life of the landfill.

$$Q_t=\frac{2\ kL_o'\ C_{NMOC}}{\left(5.256\times10^{11}\right)}\sum_{i=1}^{n}M_i e^{-kt}i$$

6. Bibliography

1. Same as Method 2, appendix A, 40 CFR part 60.

2. Emcon Associates, Methane Generation and Recovery from Landfills. Ann Arbor Science, 1982.

3. The Johns Hopkins University, Brown Station Road Testing and Gas Recovery Projections. Laurel, Maryland: October 1982.

4. Mandeville and Associates, Procedure Manual for Landfill Gases Emission Testing.

5. Letter and attachments from Briggum, S., Waste Management of North America, to Thorneloe, S., EPA. Response to July 28, 1988 request for additional information. August 18,1988.

6. Letter and attachments from Briggum, S., Waste Management of North America, to Wyatt, S., EPA. Response to December 7, 1988 request for additional information. January 16, 1989.

METHOD 2F—DETERMINATION OF STACK GAS VELOCITY AND VOLUMETRIC FLOW RATE WITH THREE-DIMENSIONAL PROBES

NOTE: This method does not include all of the specifications (e.g., equipment and supplies) and procedures (e.g., sampling) essential to its performance. Some material has been incorporated from other methods in this part. Therefore, to obtain reliable results, those using this method should have a thorough knowledge of at least the following additional test methods: Methods 1, 2, 3 or 3A, and 4.

1.0 Scope and Application

1.1 This method is applicable for the determination of yaw angle, pitch angle, axial velocity and the volumetric flow rate of a gas stream in a stack or duct using a three-dimensional (3–D) probe. This method may be used only when the average stack or duct gas velocity is greater than or equal to 20 ft/sec. When the above condition cannot be met, alternative procedures, approved by the Administrator, U.S. Environmental Protection Agency, shall be used to make accurate flow rate determinations.

2.0 Summary of Method

2.1 A 3–D probe is used to determine the velocity pressure and the yaw and pitch angles of the flow velocity vector in a stack or duct. The method determines the yaw angle directly by rotating the probe to null the pressure across a pair of symmetrically placed ports on the probe head. The pitch angle is calculated using probe-specific calibration curves. From these values and a determination of the stack gas density, the average axial velocity of the stack gas is calculated. The average gas volumetric flow rate in the stack or duct is then determined from the average axial velocity.

3.0 Definitions

3.1. *Angle-measuring Device Rotational Offset* (R_{ADO}). The rotational position of an angle-measuring device relative to the reference scribe line, as determined during the pre-test rotational position check described in section 8.3.

3.2 *Axial Velocity*. The velocity vector parallel to the axis of the stack or duct that accounts for the yaw and pitch angle components of gas flow. The term ''axial'' is used herein to indicate that the velocity and volumetric flow rate results account for the measured yaw and pitch components of flow at each measurement point.

3.3 *Calibration Pitot Tube.* The standard (Prandtl type) pitot tube used as a reference when calibrating a 3–D probe under this method.

3.4 *Field Test.* A set of measurements conducted at a specific unit or exhaust stack/duct to satisfy the applicable regulation (e.g., a three-run boiler performance test, a single-or multiple-load nine-run relative accuracy test).

3.5 *Full Scale of Pressure-measuring Device.* Full scale refers to the upper limit of the measurement range displayed by the device. For bi-directional pressure gauges, full scale includes the entire pressure range from the lowest negative value to the highest positive value on the pressure scale.

3.6 *Main probe.* Refers to the probe head and that section of probe sheath directly attached to the probe head. The main probe sheath is distinguished from probe extensions, which are sections of sheath added onto the main probe to extend its reach.

3.7 *''May,'' ''Must,'' ''Shall,'' ''Should,''* and the imperative form of verbs.

3.7.1 *''May''* is used to indicate that a provision of this method is optional.

3.7.2 *''Must,'' ''Shall,''* and the imperative form of verbs (such as ''record'' or ''enter'') are used to indicate that a provision of this method is mandatory.

3.7.3 *''Should''* is used to indicate that a provision of this method is not mandatory, but is highly recommended as good practice.

3.8 *Method 1.* Refers to 40 CFR part 60, appendix A, ''Method 1—Sample and velocity traverses for stationary sources.''

3.9 *Method 2.* Refers to 40 CFR part 60, appendix A, ''Method 2—Determination of stack gas velocity and volumetric flow rate (Type S pitot tube).''

3.10 *Method 2G.* Refers to 40 CFR part 60, appendix A, ''Method 2G—Determination of stack gas velocity and volumetric flow rate with two-dimensional probes.''

3.11 *Nominal Velocity*. Refers to a wind tunnel velocity setting that approximates the actual wind tunnel velocity to within ±1.5 m/sec (±5 ft/sec).

3.12 *Pitch Angle.* The angle between the axis of the stack or duct and the pitch component of flow, i.e., the component of the total velocity vector in a plane defined by the traverse line and the axis of the stack or duct. (Figure 2F–1 illustrates the ''pitch plane.'') From the standpoint of a tester facing a test port in a vertical stack, the pitch component of flow is the vector of flow moving from the center of the stack toward or away from that test port. The pitch angle is the angle described by this pitch component of flow and the vertical axis of the stack.

3.13 *Readability*. For the purposes of this method, readability for an analog measurement device is one half of the smallest scale division. For a digital measurement device, it is the number of decimals displayed by the device.

3.14 *Reference Scribe Line.* A line permanently inscribed on the main probe sheath (in accordance with section 6.1.6.1) to serve

as a reference mark for determining yaw angles.

3.15 *Reference Scribe Line Rotational Offset* (R_{SLO}). The rotational position of a probe's reference scribe line relative to the probe's yaw-null position, as determined during the yaw angle calibration described in section 10.5.

3.16 *Response Time.* The time required for the measurement system to fully respond to a change from zero differential pressure and ambient temperature to the stable stack or duct pressure and temperature readings at a traverse point.

3.17 *Tested Probe.* A 3–D probe that is being calibrated.

3.18 *Three-dimensional (3–D) Probe.* A directional probe used to determine the velocity pressure and yaw and pitch angles in a flowing gas stream.

3.19 *Traverse Line.* A diameter or axis extending across a stack or duct on which measurements of differential pressure and flow angles are made.

3.20 *Wind Tunnel Calibration Location.* A point, line, area, or volume within the wind tunnel test section at, along, or within which probes are calibrated. At a particular wind tunnel velocity setting, the average velocity pressures at specified points at, along, or within the calibration location shall vary by no more than 2 percent or 0.3 mm H_2O (0.01 in. H_2O), whichever is less restrictive, from the average velocity pressure at the calibration pitot tube location. Air flow at this location shall be axial, i.e., yaw and pitch angles within ±3°. Compliance with these flow criteria shall be demonstrated by performing the procedures prescribed in sections 10.1.1 and 10.1.2. For circular tunnels, no part of the calibration location may be closer to the tunnel wall than 10.2 cm (4 in.) or 25 percent of the tunnel diameter, whichever is farther from the wall. For elliptical or rectangular tunnels, no part of the calibration location may be closer to the tunnel wall than 10.2 cm (4 in.) or 25 percent of the applicable cross-sectional axis, whichever is farther from the wall.

3.21 *Wind Tunnel with Documented Axial Flow.* A wind tunnel facility documented as meeting the provisions of sections 10.1.1 (velocity pressure cross-check) and 10.1.2 (axial flow verification) using the procedures described in these sections or alternative procedures determined to be technically equivalent.

3.22 *Yaw Angle.* The angle between the axis of the stack or duct and the yaw component of flow, i.e., the component of the total velocity vector in a plane perpendicular to the traverse line at a particular traverse point. (Figure 2F–1 illustrates the ''yaw plane.'') From the standpoint of a tester facing a test port in a vertical stack, the yaw component of flow is the vector of flow moving to the left or right from the center of the stack as viewed by the tester. (This is sometimes referred to as ''vortex flow,'' i.e., flow around the centerline of a stack or duct.) The yaw angle is the angle described by this yaw component of flow and the vertical axis of the stack. The algebraic sign convention is illustrated in Figure 2F–2.

3.23 *Yaw Nulling.* A procedure in which a probe is rotated about its axis in a stack or duct until a zero differential pressure reading (''yaw null'') is obtained. When a 3–D probe is yaw-nulled, its impact pressure port (P_1) faces directly into the direction of flow in the stack or duct and the differential pressure between pressure ports P_2 and P_3 is zero.

4.0 *Interferences.* [Reserved]

5.0 *Safety.*

5.1 This test method may involve hazardous operations and the use of hazardous materials or equipment. This method does not purport to address all of the safety problems associated with its use. It is the responsibility of the user to establish and implement appropriate safety and health practices and to determine the applicability of regulatory limitations before using this test method.

6.0 Equipment and Supplies

6.1 *Three-dimensional Probes.* The 3–D probes as specified in subsections 6.1.1 through 6.1.3 below qualify for use based on comprehensive wind tunnel and field studies involving both inter-and intra-probe comparisons by multiple test teams. Other types of probes shall not be used unless approved by the Administrator. Each 3–D probe shall have a unique identification number or code permanently marked on the main probe sheath. The minimum recommended diameter of the sensing head of any probe used under this method is 2.5 cm (1 in.). Each probe shall be calibrated prior to use according to the procedures in section 10. Manufacturer-supplied calibration data shall be used as example information only, except when the manufacturer calibrates the 3–D probe as specified in section 10 and provides complete documentation.

6.1.1 *Five-hole prism-shaped probe.* This type of probe consists of five pressure taps in the flat facets of a prism-shaped sensing head. The pressure taps are numbered 1 through 5, with the pressures measured at each hole referred to as P_1, P_2, P_3, P_4, and P_5, respectively. Figure 2F–3 is an illustration of the placement of pressure taps on a commonly available five-hole prism-shaped probe, the 2.5-cm (1-in.) DAT probe. (Note: Mention of trade names or specific products does not constitute endorsement by the U.S. Environmental Protection Agency.) The numbering arrangement for the prism-shaped sensing head presented in Figure 2F–3 shall be followed for correct operation of the probe. A brief description of the probe

measurements involved is as follows: the differential pressure $P_2–P_3$ is used to yaw null the probe and determine the yaw angle; the differential pressure $P_4–P_5$ is a function of pitch angle; and the differential pressure $P_1–P_2$ is a function of total velocity.

6.1.2 *Five-hole spherical probe.* This type of probe consists of five pressure taps in a spherical sensing head. As with the prism-shaped probe, the pressure taps are numbered 1 through 5, with the pressures measured at each hole referred to as P_1, P_2, P_3, P_4, and P_5, respectively. However, the P_4 and P_5 pressure taps are in the reverse location from their respective positions on the prism-shaped probe head. The differential pressure $P_2–P_3$ is used to yaw null the probe and determine the yaw angle; the differential pressure $P_4–P_5$ is a function of pitch angle; and the differential pressure $P_1–P_2$ is a function of total velocity. A diagram of a typical spherical probe sensing head is presented in Figure 2F–4. Typical probe dimensions are indicated in the illustration.

6.1.3 *A manual 3–D probe* refers to a five-hole prism-shaped or spherical probe that is positioned at individual traverse points and yaw nulled manually by an operator. An automated 3–D probe refers to a system that uses a computer-controlled motorized mechanism to position the five-hole prism-shaped or spherical head at individual traverse points and perform yaw angle determinations.

6.1.4 *Other three-dimensional probes.* [Reserved]

6.1.5 *Probe sheath.* The probe shaft shall include an outer sheath to: (1) provide a surface for inscribing a permanent reference scribe line, (2) accommodate attachment of an angle-measuring device to the probe shaft, and (3) facilitate precise rotational movement of the probe for determining yaw angles. The sheath shall be rigidly attached to the probe assembly and shall enclose all pressure lines from the probe head to the farthest position away from the probe head where an angle-measuring device may be attached during use in the field. The sheath of the fully assembled probe shall be sufficiently rigid and straight at all rotational positions such that, when one end of the probe shaft is held in a horizontal position, the fully extended probe meets the horizontal straightness specifications indicated in section 8.2 below.

6.1.6 *Scribe lines.*

6.1.6.1 *Reference scribe line.* A permanent line, no greater than 1.6 mm (1/16 in.) in width, shall be inscribed on each manual probe that will be used to determine yaw angles of flow. This line shall be placed on the main probe sheath in accordance with the procedures described in section 10.4 and is used as a reference position for installation of the yaw angle-measuring device on the probe. At the discretion of the tester, the scribe line may be a single line segment placed at a particular position on the probe sheath (e.g., near the probe head), multiple line segments placed at various locations along the length of the probe sheath (e.g., at every position where a yaw angle-measuring device may be mounted), or a single continuous line extending along the full length of the probe sheath.

6.1.6.2 *Scribe line on probe extensions.* A permanent line may also be inscribed on any probe extension that will be attached to the main probe in performing field testing. This allows a yaw angle-measuring device mounted on the extension to be readily aligned with the reference scribe line on the main probe sheath.

6.1.6.3 *Alignment specifications.* This specification shall be met separately, using the procedures in section 10.4.1, on the main probe and on each probe extension. The rotational position of the scribe line or scribe line segments on the main probe or any probe extension must not vary by more than 2°. That is, the difference between the minimum and maximum of all of the rotational angles that are measured along the full length of the main probe or the probe extension must not exceed 2°.

6.1.7 Probe and system characteristics to ensure horizontal stability.

6.1.7.1 For manual probes, it is recommended that the effective length of the probe (coupled with a probe extension, if necessary) be at least 0.9 m (3 ft.) longer than the farthest traverse point mark on the probe shaft away from the probe head. The operator should maintain the probe's horizontal stability when it is fully inserted into the stack or duct. If a shorter probe is used, the probe should be inserted through a bushing sleeve, similar to the one shown in Figure 2F–5, that is installed on the test port; such a bushing shall fit snugly around the probe and be secured to the stack or duct entry port in such a manner as to maintain the probe's horizontal stability when fully inserted into the stack or duct.

6.1.7.2 An automated system that includes an external probe casing with a transport system shall have a mechanism for maintaining horizontal stability comparable to that obtained by manual probes following the provisions of this method. The automated probe assembly shall also be constructed to maintain the alignment and position of the pressure ports during sampling at each traverse point. The design of the probe casing and transport system shall allow the probe to be removed from the stack or duct and checked through direct physical measurement for angular position and insertion depth.

6.1.8 The tubing that is used to connect the probe and the pressure-measuring device should have an inside diameter of at least 3.2 mm (1/8 in.), to reduce the time required for

pressure equilibration, and should be as short as practicable.

6.2 Yaw Angle-measuring Device. One of the following devices shall be used for measurement of the yaw angle of flow.

6.2.1 Digital inclinometer. This refers to a digital device capable of measuring and displaying the rotational position of the probe to within ±1°. The device shall be able to be locked into position on the probe sheath or probe extension, so that it indicates the probe's rotational position throughout the test. A rotational position collar block that can be attached to the probe sheath (similar to the collar shown in Figure 2F–6) may be required to lock the digital inclinometer into position on the probe sheath.

6.2.2 Protractor wheel and pointer assembly. This apparatus, similar to that shown in Figure 2F–7, consists of the following components.

6.2.2.1 A protractor wheel that can be attached to a port opening and set in a fixed rotational position to indicate the yaw angle position of the probe's scribe line relative to the longitudinal axis of the stack or duct. The protractor wheel must have a measurement ring on its face that is no less than 17.8 cm (7 in.) in diameter, shall be able to be rotated to any angle and then locked into position on the stack or duct port, and shall indicate angles to a resolution of 1°.

6.2.2.2 A pointer assembly that includes an indicator needle mounted on a collar that can slide over the probe sheath and be locked into a fixed rotational position on the probe sheath. The pointer needle shall be of sufficient length, rigidity, and sharpness to allow the tester to determine the probe's angular position to within 1° from the markings on the protractor wheel. Corresponding to the position of the pointer, the collar must have a scribe line to be used in aligning the pointer with the scribe line on the probe sheath.

6.2.3 Other yaw angle-measuring devices. Other angle-measuring devices with a manufacturer's specified precision of 1° or better may be used, if approved by the Administrator.

6.3 Probe Supports and Stabilization Devices. When probes are used for determining flow angles, the probe head should be kept in a stable horizontal position. For probes longer than 3.0 m (10 ft.), the section of the probe that extends outside the test port shall be secured. Three alternative devices are suggested for maintaining the horizontal position and stability of the probe shaft during flow angle determinations and velocity pressure measurements: (1) Monorails installed above each port, (2) probe stands on which the probe shaft may be rested, or (3) bushing sleeves of sufficient length secured to the test ports to maintain probes in a horizontal position. Comparable provisions shall be made to ensure that automated systems maintain the horizontal position of the probe in the stack or duct. The physical characteristics of each test platform may dictate the most suitable type of stabilization device. Thus, the choice of a specific stabilization device is left to the judgment of the testers.

6.4 Differential Pressure Gauges. The pressure (ΔP) measuring devices used during wind tunnel calibrations and field testing shall be either electronic manometers (e.g., pressure transducers), fluid manometers, or mechanical pressure gauges (e.g., MagnehelicΔ gauges). Use of electronic manometers is recommended. Under low velocity conditions, use of electronic manometers may be necessary to obtain acceptable measurements.

6.4.1 Differential pressure-measuring device. This refers to a device capable of measuring pressure differentials and having a readability of ±1 percent of full scale. The device shall be capable of accurately measuring the maximum expected pressure differential. Such devices are used to determine the following pressure measurements: velocity pressure, static pressure, yaw-null pressure, and pitch-angle pressure. For an inclined-vertical manometer, the readability specification of ±1 percent shall be met separately using the respective full-scale upper limits of the inclined and vertical portions of the scales. To the extent practicable, the device shall be selected such that most of the pressure readings are between 10 and 90 percent of the device's full-scale measurement range (as defined in section 3.5). Typical velocity pressure (P_1–P_2) ranges for both the prism-shaped probe and the spherical probe are 0 to 1.3 cm H_2O (0 to 0.5 in. H_2O), 0 to 5.1 cm H_2O (0 to 2 in. H_2O), and 0 to 12.7 cm H_2O (0 to 5 in. H_2O). The pitch angle (P_4–P_5) pressure range is typically −6.4 to +6.4 mm H_2O (−0.25 to +0.25 in. H_2O) or −12.7 to +12.7 mm H_2O (−0.5 to +0.5 in. H_2O) for the prism-shaped probe, and −12.7 to +12.7 mm H_2O (−0.5 to +0.5 in. H_2O) or −5.1 to +5.1 cm H_2O (−2 to +2 in. H_2O) for the spherical probe. The pressure range for the yaw null (P_2–P_3) readings is typically −12.7 to +12.7 mm H_2O (−0.5 to +0.5 in. H_2O) for both probe types. In addition, pressure-measuring devices should be selected such that the zero does not drift by more than 5 percent of the average expected pressure readings to be encountered during the field test. This is particularly important under low pressure conditions.

6.4.2 Gauge used for yaw nulling. The differential pressure-measuring device chosen for yaw nulling the probe during the wind tunnel calibrations and field testing shall be bi-directional, i.e., capable of reading both positive and negative differential pressures. If a mechanical, bi-directional pressure gauge is chosen, it shall have a full-scale range no greater than 2.6 cm H_2O (1 in. H_2O) [i.e., −1.3 to +1.3 cm H_2O (−0.5 in. to +0.5 in.)].

6.4.3 Devices for calibrating differential pressure-measuring devices. A precision manometer (e.g., a U-tube, inclined, or inclined-vertical manometer, or micromanometer) or NIST (National Institute of Standards and Technology) traceable pressure source shall be used for calibrating differential pressure-measuring devices. The device shall be maintained under laboratory conditions or in a similar protected environment (e.g., a climate-controlled trailer). It shall not be used in field tests. The precision manometer shall have a scale gradation of 0.3 mm H_2O (0.01 in. H_2O), or less, in the range of 0 to 5.1 cm H_2O (0 to 2 in. H_2O) and 2.5 mm H_2O (0.1 in. H_2O), or less, in the range of 5.1 to 25.4 cm H_2O (2 to 10 in. H_2O). The manometer shall have manufacturer's documentation that it meets an accuracy specification of at least 0.5 percent of full scale. The NIST-traceable pressure source shall be recertified annually.

6.4.4 Devices used for post-test calibration check. A precision manometer meeting the specifications in section 6.4.3, a pressure-measuring device or pressure source with a documented calibration traceable to NIST, or an equivalent device approved by the Administrator shall be used for the post-test calibration check. The pressure-measuring device shall have a readability equivalent to or greater than the tested device. The pressure source shall be capable of generating pressures between 50 and 90 percent of the range of the tested device and known to within ±1 percent of the full scale of the tested device. The pressure source shall be recertified annually.

6.5 Data Display and Capture Devices. Electronic manometers (if used) shall be coupled with a data display device (such as a digital panel meter, personal computer display, or strip chart) that allows the tester to observe and validate the pressure measurements taken during testing. They shall also be connected to a data recorder (such as a data logger or a personal computer with data capture software) that has the ability to compute and retain the appropriate average value at each traverse point, identified by collection time and traverse point.

6.6 Temperature Gauges. For field tests, a thermocouple or resistance temperature detector (RTD) capable of measuring temperature to within ±3°C (±5°F) of the stack or duct temperature shall be used. The thermocouple shall be attached to the probe such that the sensor tip does not touch any metal and is located on the opposite side of the probe head from the pressure ports so as not to interfere with the gas flow around the probe head. The position of the thermocouple relative to the pressure port face openings shall be in the same configuration as used for the probe calibrations in the wind tunnel. Temperature gauges used for wind tunnel calibrations shall be capable of measuring temperature to within ±0.6°C (±1°F) of the temperature of the flowing gas stream in the wind tunnel.

6.7 Stack or Duct Static Pressure Measurement. The pressure-measuring device used with the probe shall be as specified in section 6.4 of this method. The static tap of a standard (Prandtl type) pitot tube or one leg of a Type S pitot tube with the face opening planes positioned parallel to the gas flow may be used for this measurement. Also acceptable is the pressure differential reading of P_1–P_{bar} from a five-hole prism-shaped probe (e.g., Type DA or DAT probe) with the P_1 pressure port face opening positioned parallel to the gas flow in the same manner as the Type S probe. However, the spherical probe, as specified in section 6.1.2, is unable to provide this measurement and shall not be used to take static pressure measurements. Static pressure measurement is further described in section 8.11.

6.8 Barometer. Same as Method 2, section 2.5.

6.9 Gas Density Determination Equipment. Method 3 or 3A shall be used to determine the dry molecular weight of the stack gas. Method 4 shall be used for moisture content determination and computation of stack gas wet molecular weight. Other methods may be used, if approved by the Administrator.

6.10 Calibration Pitot Tube. Same as Method 2, section 2.7.

6.11 Wind Tunnel for Probe Calibration. Wind tunnels used to calibrate velocity probes must meet the following design specifications.

6.11.1 Test section cross-sectional area. The flowing gas stream shall be confined within a circular, rectangular, or elliptical duct. The cross-sectional area of the tunnel must be large enough to ensure fully developed flow in the presence of both the calibration pitot tube and the tested probe. The calibration site, or ''test section,'' of the wind tunnel shall have a minimum diameter of 30.5 cm (12 in.) for circular or elliptical duct cross-sections or a minimum width of 30.5 cm (12 in.) on the shorter side for rectangular cross-sections. Wind tunnels shall meet the probe blockage provisions of this section and the qualification requirements prescribed in section 10.1. The projected area of the portion of the probe head, shaft, and attached devices inside the wind tunnel during calibration shall represent no more than 4 percent of the cross-sectional area of the tunnel. The projected area shall include the combined area of the calibration pitot tube and the tested probe if both probes are placed simultaneously in the same cross-sectional plane in the wind tunnel, or the larger projected area of the two probes if they are placed alternately in the wind tunnel.

6.11.2 Velocity range and stability. The wind tunnel should be capable of maintaining velocities between 6.1 m/sec and 30.5 m/

sec (20 ft/sec and 100 ft/sec). The wind tunnel shall produce fully developed flow patterns that are stable and parallel to the axis of the duct in the test section.

6.11.3 Flow profile at the calibration location. The wind tunnel shall provide axial flow within the test section calibration location (as defined in section 3.20). Yaw and pitch angles in the calibration location shall be within ±3° of 0°. The procedure for determining that this requirement has been met is described in section 10.1.2.

6.11.4 Entry ports in the wind tunnel test section.

6.11.4.1 Port for tested probe. A port shall be constructed for the tested probe. The port should have an elongated slot parallel to the axis of the duct at the test section. The elongated slot should be of sufficient length to allow attaining all the pitch angles at which the probe will be calibrated for use in the field. To facilitate alignment of the probe during calibration, the test section should include a window constructed of a transparent material to allow the tested probe to be viewed. This port shall be located to allow the head of the tested probe to be positioned within the calibration location (as defined in section 3.20) at all pitch angle settings.

6.11.4.2 Port for verification of axial flow. Depending on the equipment selected to conduct the axial flow verification prescribed in section 10.1.2, a second port, located 90° from the entry port for the tested probe, may be needed to allow verification that the gas flow is parallel to the central axis of the test section. This port should be located and constructed so as to allow one of the probes described in section 10.1.2.2 to access the same test point(s) that are accessible from the port described in section 6.11.4.1.

6.11.4.3 Port for calibration pitot tube. The calibration pitot tube shall be used in the port for the tested probe or a separate entry port. In either case, all measurements with the calibration pitot tube shall be made at the same point within the wind tunnel over the course of a probe calibration. The measurement point for the calibration pitot tube shall meet the same specifications for distance from the wall and for axial flow as described in section 3.20 for the wind tunnel calibration location.

6.11.5 Pitch angle protractor plate. A protractor plate shall be attached directly under the port used with the tested probe and set in a fixed position to indicate the pitch angle position of the probe relative to the longitudinal axis of the wind tunnel duct (similar to Figure 2F–8). The protractor plate shall indicate angles in 5° increments with a minimum resolution of ±2°. The tested probe shall be able to be locked into position at the desired pitch angle delineated on the protractor. The probe head position shall be maintained within the calibration location (as defined in section 3.20) in the test section of the wind tunnel during all tests across the range of pitch angles.

7.0 Reagents and Standards. [Reserved]

8.0 Sample Collection and Analysis

8.1 Equipment Inspection and Set-Up

8.1.1 All probes, differential pressure-measuring devices, yaw angle-measuring devices, thermocouples, and barometers shall have a current, valid calibration before being used in a field test. (See sections 10.3.3, 10.3.4, and 10.5 through10.10 for the applicable calibration requirements.)

8.1.2 Before each field use of a 3-D probe, perform a visual inspection to verify the physical condition of the probe head according to the procedures in section 10.2. Record the inspection results on a form similar to Table 2F–1. If there is visible damage to the 3-D probe, the probe shall not be used until it is recalibrated.

8.1.3 After verifying that the physical condition of the probe head is acceptable, set up the apparatus using lengths of flexible tubing that are as short as practicable. Surge tanks installed between the probe and pressure-measuring device may be used to dampen pressure fluctuations provided that an adequate measurement response time (see section 8.8) is maintained.

8.2 Horizontal Straightness Check. A horizontal straightness check shall be performed before the start of each field test, except as otherwise specified in this section. Secure the fully assembled probe (including the probe head and all probe shaft extensions) in a horizontal position using a stationary support at a point along the probe shaft approximating the location of the stack or duct entry port when the probe is sampling at the farthest traverse point from the stack or duct wall. The probe shall be rotated to detect bends. Use an angle-measuring device or trigonometry to determine the bend or sag between the probe head and the secured end. (See Figure 2F–9.) Probes that are bent or sag by more than 5° shall not be used. Although this check does not apply when the probe is used for a vertical traverse, care should be taken to avoid the use of bent probes when conducting vertical traverses. If the probe is constructed of a rigid steel material and consists of a main probe without probe extensions, this check need only be performed before the initial field use of the probe, when the probe is recalibrated, when a change is made to the the design or material of the probe assembly, and when the probe becomes bent. With such probes, a visual inspection shall be made of the fully assembled probe before each field test to determine if a bend is visible. The probe shall be rotated to detect bends. The inspection results shall be documented in the field test report. If a bend in the probe is visible, the horizontal

straightness check shall be performed before the probe is used.

8.3 Rotational Position Check. Before each field test, and each time an extension is added to the probe during a field test, a rotational position check shall be performed on all manually operated probes (except as noted in section 8.3.5, below) to ensure that, throughout testing, the angle-measuring device is either: aligned to within ±1° of the rotational position of the reference scribe line; or is affixed to the probe such that the rotational offset of the device from the reference scribe line is known to within ±1°. This check shall consist of direct measurements of the rotational positions of the reference scribe line and angle-measuring device sufficient to verify that these specifications are met. Annex A in section 18 of this method gives recommended procedures for performing the rotational position check, and Table 2F–2 gives an example data form. Procedures other than those recommended in Annex A in section 18 may be used, provided they demonstrate whether the alignment specification is met and are explained in detail in the field test report.

8.3.1 Angle-measuring device rotational offset. The tester shall maintain a record of the angle-measuring device rotational offset, R_{ADO}, as defined in section 3.1. Note that R_{ADO} is assigned a value of 0° when the angle-measuring device is aligned to within ±1° of the rotational position of the reference scribe line. The R_{ADO} shall be used to determine the yaw angle of flow in accordance with section 8.9.4.

8.3.2 Sign of angle-measuring device rotational offset. The sign of R_{ADO} is positive when the angle-measuring device (as viewed from the ''tail'' end of the probe) is positioned in a clockwise direction from the reference scribe line and negative when the device is positioned in a counterclockwise direction from the reference scribe line.

8.3.3 Angle-measuring devices that can be independently adjusted (e.g., by means of a set screw), after being locked into position on the probe sheath, may be used. However, the R_{ADO} must also take into account this adjustment.

8.3.4 Post-test check. If probe extensions remain attached to the main probe throughout the field test, the rotational position check shall be repeated, at a minimum, at the completion of the field test to ensure that the angle-measuring device has remained within ±2° of its rotational position established prior to testing. At the discretion of the tester, additional checks may be conducted after completion of testing at any sample port or after any test run. If the ±2° specification is not met, all measurements made since the last successful rotational position check must be repeated. Section 18.1.1.3 of Annex A provides an example procedure for performing the post-test check.

8.3.5 Exceptions.

8.3.5.1 A rotational position check need not be performed if, for measurements taken at all velocity traverse points, the yaw angle-measuring device is mounted and aligned directly on the reference scribe line specified in sections 6.1.6.1 and 6.1.6.3 and no independent adjustments, as described in section 8.3.3, are made to the device's rotational position.

8.3.5.2 If extensions are detached and re-attached to the probe during a field test, a rotational position check need only be performed the first time an extension is added to the probe, rather than each time the extension is re-attached, if the probe extension is designed to be locked into a mechanically fixed rotational position (e.g., through use of interlocking grooves) that can re-establish the initial rotational position to within ±1°.

8.4 Leak Checks. A pre-test leak check shall be conducted before each field test. A post-test check shall be performed at the end of the field test, but additional leak checks may be conducted after any test run or group of test runs. The post-test check may also serve as the pre-test check for the next group of test runs. If any leak check is failed, all runs since the last passed leak check are invalid. While performing the leak check procedures, also check each pressure device's responsiveness to the changes in pressure.

8.4.1 To perform the leak check, pressurize the probe's P_1 pressure port until at least 7.6 cm H_2O (3 in. H_2O) pressure, or a pressure corresponding to approximately 75 percent of the pressure-measuring device's measurement scale, whichever is less, registers on the device; then, close off the pressure port. The pressure shall remain stable [±2.5 mm H_2O (±0.10 in. H_2O)] for at least 15 seconds. Check the P_2, P_3, P_4, and P_5 pressure ports in the same fashion. Other leak-check procedures may be used, if approved by the Administrator.

8.5 Zeroing the Differential Pressure-measuring Device. Zero each differential pressure-measuring device, including the device used for yaw nulling, before each field test. At a minimum, check the zero after each field test. A zero check may also be performed after any test run or group of test runs. For fluid manometers and mechanical pressure gauges (e.g., MagnehelicΔ gauges), the zero reading shall not deviate from zero by more than ±0.8 mm H_2O (±0.03 in. H_2O) or one minor scale division, whichever is greater, between checks. For electronic manometers, the zero reading shall not deviate from zero between checks by more than: ±0.3 mm H_2O (±0.01 in. H_2O), for full scales less than or equal to 5.1 cm H_2O (2.0 in. H_2O); or ±0.8 mm H_2O (±0.03 in. H_2O), for full scales greater than 5.1 cm H_2O (2.0 in. H_2O). (Note: If negative zero drift is not directly readable, estimate the reading based on the position of

the gauge oil in the manometer or of the needle on the pressure gauge.) In addition, for all pressure-measuring devices except those used exclusively for yaw nulling, the zero reading shall not deviate from zero by more than 5 percent of the average measured differential pressure at any distinct process condition or load level. If any zero check is failed at a specific process condition or load level, all runs conducted at that process condition or load level since the last passed zero check are invalid.

8.6 Traverse Point Verification. The number and location of the traverse points shall be selected based on Method 1 guidelines. The stack or duct diameter and port nipple lengths, including any extension of the port nipples into stack or duct, shall be verified the first time the test is performed; retain and use this information for subsequent field tests, updating it as required. Physically measure the stack or duct dimensions or use a calibrated laser device; do not use engineering drawings of the stack or duct. The probe length necessary to reach each traverse point shall be recorded to within ±6.4 mm (±1/4 in.) and, for manual probes, marked on the probe sheath. In determining these lengths, the tester shall take into account both the distance that the port flange projects outside of the stack and the depth that any port nipple extends into the gas stream. The resulting point positions shall reflect the true distances from the inside wall of the stack or duct, so that when the tester aligns any of the markings with the outside face of the stack port, the probe's impact port shall be located at the appropriate distance from the inside wall for the respective Method 1 traverse point. Before beginning testing at a particular location, an out-of-stack or duct verification shall be performed on each probe that will be used to ensure that these position markings are correct. The distances measured during the verification must agree with the previously calculated distances to within ±1/4 in. For manual probes, the traverse point positions shall be verified by measuring the distance of each mark from the probe's P_1 pressure port. A comparable out-of-stack test shall be performed on automated probe systems. The probe shall be extended to each of the prescribed traverse point positions. Then, the accuracy of the positioning for each traverse point shall be verified by measuring the distance between the port flange and the probe's P_1 pressure port.

8.7 Probe Installation. Insert the probe into the test port. A solid material shall be used to seal the port.

8.8 System Response Time. Determine the response time of the probe measurement system. Insert and position the ''cold'' probe (at ambient temperature and pressure) at any Method 1 traverse point. Read and record the probe's P_1–P_2 differential pressure, temperature, and elapsed time at 15-second intervals until stable readings for both pressure and temperature are achieved. The response time is the longer of these two elapsed times. Record the response time.

8.9 Sampling.

8.9.1 Yaw angle measurement protocol. With manual probes, yaw angle measurements may be obtained in two alternative ways during the field test, either by using a yaw angle-measuring device (e.g., digital inclinometer) affixed to the probe, or using a protractor wheel and pointer assembly. For horizontal traversing, either approach may be used. For vertical traversing, i.e., when measuring from on top or into the bottom of a horizontal duct, only the protractor wheel and pointer assembly may be used. With automated probes, curve-fitting protocols may be used to obtain yaw-angle measurements.

8.9.1.1 If a yaw angle-measuring device affixed to the probe is to be used, lock the device on the probe sheath, aligning it either on the reference scribe line or in the rotational offset position established under section 8.3.1.

8.9.1.2 If a protractor wheel and pointer assembly is to be used, follow the procedures in Annex B of this method.

8.9.1.3 Other yaw angle-determination procedures. If approved by the Administrator, other procedures for determining yaw angle may be used, provided that they are verified in a wind tunnel to be able to perform the yaw angle calibration procedure as described in section 10.5.

8.9.2 Sampling strategy. At each traverse point, first yaw-null the probe, as described in section 8.9.3, below. Then, with the probe oriented into the direction of flow, measure and record the yaw angle, the differential pressures and the temperature at the traverse point, after stable readings are achieved, in accordance with sections 8.9.4 and 8.9.5. At the start of testing in each port (i.e., after a probe has been inserted into the flue gas stream), allow at least the response time to elapse before beginning to take measurements at the first traverse point accessed from that port. Provided that the probe is not removed from the flue gas stream, measurements may be taken at subsequent traverse points accessed from the same test port without waiting again for the response time to elapse.

8.9.3 Yaw-nulling procedure. In preparation for yaw angle determination, the probe must first be yaw nulled. After positioning the probe at the appropriate traverse point, perform the following procedures.

8.9.3.1 Rotate the probe until a null differential pressure reading (the difference in pressures across the P_2 and P_3 pressure ports is zero, i.e., $P_2 = P_3$) is indicated by the yaw angle pressure gauge. Read and record the

angle displayed by the angle-measuring device.

8.9.3.2 Sign of the measured angle. The angle displayed on the angle-measuring device is considered positive when the probe's impact pressure port (as viewed from the ''tail'' end of the probe) is oriented in a clockwise rotational position relative to the stack or duct axis and is considered negative when the probe's impact pressure port is oriented in a counterclockwise rotational position (see Figure 2F–10).

8.9.4 Yaw angle determination. After performing the yaw-nulling procedure in section 8.9.3, determine the yaw angle of flow according to one of the following procedures. Special care must be observed to take into account the signs of the recorded angle and all offsets.

8.9.4.1 Direct-reading. If all rotational offsets are zero or if the angle-measuring device rotational offset (R_{ADO}) determined in section 8.3 exactly compensates for the scribe line rotational offset (R_{SLO}) determined in section 10.5, then the magnitude of the yaw angle is equal to the displayed angle-measuring device reading from section 8.9.3.1. The algebraic sign of the yaw angle is determined in accordance with section 8.9.3.2.

NOTE: Under certain circumstances (e.g., testing of horizontal ducts), a 90° adjustment to the angle-measuring device readings may be necessary to obtain the correct yaw angles.

8.9.4.2 Compensation for rotational offsets during data reduction. When the angle-measuring device rotational offset does not compensate for reference scribe line rotational offset, the following procedure shall be used to determine the yaw angle:

(a) Enter the reading indicated by the angle-measuring device from section 8.9.3.1.

(b) Associate the proper algebraic sign from section 8.9.3.2 with the reading in step (a).

(c) Subtract the reference scribe line rotational offset, R_{SLO}, from the reading in step (b).

(d) Subtract the angle-measuring device rotational offset, R_{ADO}, if any, from the result obtained in step (c).

(e) The final result obtained in step (d) is the yaw angle of flow.

NOTE: It may be necessary to first apply a 90° adjustment to the reading in step (a), in order to obtain the correct yaw angle.

8.9.4.3 Record the yaw angle measurements on a form similar to Table 2F–3.

8.9.5 Velocity determination. Maintain the probe rotational position established during the yaw angle determination. Then, begin recording the pressure-measuring device readings for the impact pressure (P_1–P_2) and pitch angle pressure (P_4–P_5). These pressure measurements shall be taken over a sampling period of sufficiently long duration to ensure representative readings at each traverse point. If the pressure measurements are determined from visual readings of the pressure device or display, allow sufficient time to observe the pulsation in the readings to obtain a sight-weighted average, which is then recorded manually. If an automated data acquisition system (e.g., data logger, computer-based data recorder, strip chart recorder) is used to record the pressure measurements, obtain an integrated average of all pressure readings at the traverse point. Stack or duct gas temperature measurements shall be recorded, at a minimum, once at each traverse point. Record all necessary data as shown in the example field data form (Table 2F–3).

8.9.6 Alignment check. For manually operated probes, after the required yaw angle and differential pressure and temperature measurements have been made at each traverse point, verify (e.g., by visual inspection) that the yaw angle-measuring device has remained in proper alignment with the reference scribe line or with the rotational offset position established in section 8.3. If, for a particular traverse point, the angle-measuring device is found to be in proper alignment, proceed to the next traverse point; otherwise, re-align the device and repeat the angle and differential pressure measurements at the traverse point. In the course of a traverse, if a mark used to properly align the angle-measuring device (e.g., as described in section 18.1.1.1) cannot be located, re-establish the alignment mark before proceeding with the traverse.

8.10 Probe Plugging. Periodically check for plugging of the pressure ports by observing the responses on pressure differential readouts. Plugging causes erratic results or sluggish responses. Rotate the probe to determine whether the readouts respond in the expected direction. If plugging is detected, correct the problem and repeat the affected measurements.

8.11 Static Pressure. Measure the static pressure in the stack or duct using the equipment described in section 6.7.

8.11.1 If a Type DA or DAT probe is used for this measurement, position the probe at or between any traverse point(s) and rotate the probe until a null differential pressure reading is obtained at P_2–P_3. Rotate the probe 90°. Disconnect the P_2 pressure side of the probe and read the pressure P_1-P_{bar} and record as the static pressure. (NOTE: The spherical probe, specified in section 6.1.2, is unable to provide this measurement and shall not be used to take static pressure measurements.)

8.11.2 If a Type S probe is used for this measurement, position the probe at or between any traverse point(s) and rotate the probe until a null differential pressure reading is obtained. Disconnect the tubing from one of the pressure ports; read and record the

ΔP. For pressure devices with one-directional scales, if a deflection in the positive direction is noted with the negative side disconnected, then the static pressure is positive. Likewise, if a deflection in the positive direction is noted with the positive side disconnected, then the static pressure is negative.

8.12 Atmospheric Pressure. Determine the atmospheric pressure at the sampling elevation during each test run following the procedure described in section 2.5 of Method 2.

8.13 Molecular Weight. Determine the stack gas dry molecular weight. For combustion processes or processes that emit essentially CO_2, O_2, CO, and N_2, use Method 3 or 3A. For processes emitting essentially air, an analysis need not be conducted; use a dry molecular weight of 29.0. Other methods may be used, if approved by the Administrator.

8.14 Moisture. Determine the moisture content of the stack gas using Method 4 or equivalent.

8.15 Data Recording and Calculations. Record all required data on a form similar to Table 2F–3.

8.15.1 Selection of appropriate calibration curves. Choose the appropriate pair of F_1 and F_2 versus pitch angle calibration curves, created as described in section 10.6.

8.15.2 Pitch angle derivation. Use the appropriate calculation procedures in section 12.2 to find the pitch angle ratios that are applicable at each traverse point. Then, find the pitch angles corresponding to these pitch angle ratios on the ''F_1 versus pitch angle'' curve for the probe.

8.15.3 Velocity calibration coefficient derivation. Use the pitch angle obtained following the procedures described in section 8.15.2 to find the corresponding velocity calibration coefficients from the ''F_2 versus pitch angle'' calibration curve for the probe.

8.15.4 Calculations. Calculate the axial velocity at each traverse point using the equations presented in section 12.2 to account for the yaw and pitch angles of flow. Calculate the test run average stack gas velocity by finding the arithmetic average of the point velocity results in accordance with sections 12.3 and 12.4, and calculate the stack gas volumetric flow rate in accordance with section 12.5 or 12.6, as applicable.

9.0 Quality Control

9.1 Quality Control Activities. In conjunction with the yaw angle determination and the pressure and temperature measurements specified in section 8.9, the following quality control checks should be performed.

9.1.1 Range of the differential pressure gauge. In accordance with the specifications in section 6.4, ensure that the proper differential pressure gauge is being used for the range of ΔP values encountered. If it is necessary to change to a more sensitive gauge, replace the gauge with a gauge calibrated according to section 10.3.3, perform the leak check described in section 8.4 and the zero check described in section 8.5, and repeat the differential pressure and temperature readings at each traverse point.

9.1.2 Horizontal stability check. For horizontal traverses of a stack or duct, visually check that the probe shaft is maintained in a horizontal position prior to taking a pressure reading. Periodically, during a test run, the probe's horizontal stability should be verified by placing a carpenter's level, a digital inclinometer, or other angle-measuring device on the portion of the probe sheath that extends outside of the test port. A comparable check should be performed by automated systems.

10.0 Calibration

10.1 Wind Tunnel Qualification Checks. To qualify for use in calibrating probes, a wind tunnel shall have the design features specified in section 6.11 and satisfy the following qualification criteria. The velocity pressure cross-check in section 10.1.1 and axial flow verification in section 10.1.2 shall be performed before the initial use of the wind tunnel and repeated immediately after any alteration occurs in the wind tunnel's configuration, fans, interior surfaces, straightening vanes, controls, or other properties that could reasonably be expected to alter the flow pattern or velocity stability in the tunnel. The owner or operator of a wind tunnel used to calibrate probes according to this method shall maintain records documenting that the wind tunnel meets the requirements of sections 10.1.1 and 10.1.2 and shall provide these records to the Administrator upon request.

10.1.1 Velocity pressure cross-check. To verify that the wind tunnel produces the same velocity at the tested probe head as at the calibration pitot tube impact port, perform the following cross-check. Take three differential pressure measurements at the fixed calibration pitot tube location, using the calibration pitot tube specified in section 6.10, and take three measurements with the calibration pitot tube at the wind tunnel calibration location, as defined in section 3.20. Alternate the measurements between the two positions. Perform this procedure at the lowest and highest velocity settings at which the probes will be calibrated. Record the values on a form similar to Table 2F–4. At each velocity setting, the average velocity pressure obtained at the wind tunnel calibration location shall be within ±2 percent or 2.5 mm H_2O (0.01 in. H_2O), whichever is less restrictive, of the average velocity pressure obtained at the fixed calibration pitot tube location. This comparative check shall be performed at 2.5-cm (1-in.), or smaller, intervals across the full length, width,

and depth (if applicable) of the wind tunnel calibration location. If the criteria are not met at every tested point, the wind tunnel calibration location must be redefined, so that acceptable results are obtained at every point. Include the results of the velocity pressure cross-check in the calibration data section of the field test report. (See section 16.1.4.)

10.1.2 Axial flow verification. The following procedures shall be performed to demonstrate that there is fully developed axial flow within the calibration location and at the calibration pitot tube location. Two testing options are available to conduct this check.

10.1.2.1 Using a calibrated 3–D probe. A 3–D probe that has been previously calibrated in a wind tunnel with documented axial flow (as defined in section 3.21) may be used to conduct this check. Insert the calibrated 3–D probe into the wind tunnel test section using the tested probe port. Following the procedures in sections 8.9 and 12.2 of this method, determine the yaw and pitch angles at all the point(s) in the test section where the velocity pressure cross-check, as specified in section 10.1.1, is performed. This includes all the points in the calibration location and the point where the calibration pitot tube will be located. Determine the yaw and pitch angles at each point. Repeat these measurements at the highest and lowest velocities at which the probes will be calibrated. Record the values on a form similar to Table 2F–5. Each measured yaw and pitch angle shall be within ±3° of 0°. Exceeding the limits indicates unacceptable flow in the test section. Until the problem is corrected and acceptable flow is verified by repetition of this procedure, the wind tunnel shall not be used for calibration of probes. Include the results of the axial flow verification in the calibration data section of the field test report. (See section 16.1.4.)

10.1.2.2 Using alternative probes. Axial flow verification may be performed using an uncalibrated prism-shaped 3–D probe (e.g., DA or DAT probe) or an uncalibrated wedge probe. (Figure 2F–11 illustrates a typical wedge probe.) This approach requires use of two ports: the tested probe port and a second port located 90° from the tested probe port. Each port shall provide access to all the points within the wind tunnel test section where the velocity pressure cross-check, as specified in section 10.1.1, is conducted. The probe setup shall include establishing a reference yaw-null position on the probe sheath to serve as the location for installing the angle-measuring device. Physical design features of the DA, DAT, and wedge probes are relied on to determine the reference position. For the DA or DAT probe, this reference position can be determined by setting a digital inclinometer on the flat facet where the P_1 pressure port is located and then identifying the rotational position on the probe sheath where a second angle-measuring device would give the same angle reading. The reference position on a wedge probe shaft can be determined either geometrically or by placing a digital inclinometer on each side of the wedge and rotating the probe until equivalent readings are obtained. With the latter approach, the reference position is the rotational position on the probe sheath where an angle-measuring device would give a reading of 0°. After installing the angle-measuring device in the reference yaw-null position on the probe sheath, determine the yaw angle from the tested port. Repeat this measurement using the 90° offset port, which provides the pitch angle of flow. Determine the yaw and pitch angles at all the point(s) in the test section where the velocity pressure cross-check, as specified in section 10.1.1, is performed. This includes all the points in the wind tunnel calibration location and the point where the calibration pitot tube will be located. Perform this check at the highest and lowest velocities at which the probes will be calibrated. Record the values on a form similar to Table 2F–5. Each measured yaw and pitch angle shall be within ±3° of 0°. Exceeding the limits indicates unacceptable flow in the test section. Until the problem is corrected and acceptable flow is verified by repetition of this procedure, the wind tunnel shall not be used for calibration of probes. Include the results in the probe calibration report.

10.1.3 Wind tunnel audits.

10.1.3.1 Procedure. Upon the request of the Administrator, the owner or operator of a wind tunnel shall calibrate a 3–D audit probe in accordance with the procedures described in sections 10.3 through 10.6. The calibration shall be performed at two velocities and over a pitch angle range that encompasses the velocities and pitch angles typically used for this method at the facility. The resulting calibration data and curves shall be submitted to the Agency in an audit test report. These results shall be compared by the Agency to reference calibrations of the audit probe at the same velocity and pitch angle settings obtained at two different wind tunnels.

10.1.3.2 Acceptance criteria. The audited tunnel's calibration is acceptable if all of the following conditions are satisfied at each velocity and pitch setting for the reference calibration obtained from at least one of the wind tunnels. For pitch angle settings between −15° and +15°, no velocity calibration coefficient (i.e., F_2) may differ from the corresponding reference value by more than 3 percent. For pitch angle settings outside of this range (i.e., less than −15° and greater than +15°), no velocity calibration coefficient may differ by more than 5 percent from the corresponding reference value. If the acceptance criteria are not met, the audited wind

tunnel shall not be used to calibrate probes for use under this method until the problems are resolved and acceptable results are obtained upon completion of a subsequent audit.

10.2 Probe Inspection. Before each calibration of a 3–D probe, carefully examine the physical condition of the probe head. Particular attention shall be paid to the edges of the pressure ports and the surfaces surrounding these ports. Any dents, scratches, or asymmetries on the edges of the pressure ports and any scratches or indentations on the surfaces surrounding the pressure ports shall be noted because of the potential effect on the probe's pressure readings. If the probe has been previously calibrated, compare the current condition of the probe's pressure ports and surfaces to the results of the inspection performed during the probe's most recent wind tunnel calibration. Record the results of this inspection on a form and in diagrams similar to Table 2F–1. The information in Table 2F–1 will be used as the basis for comparison during the probe head inspections performed before each subsequent field use.

10.3 Pre-Calibration Procedures. Prior to calibration, a scribe line shall have been placed on the probe in accordance with section 10.4. The yaw angle and velocity calibration procedures shall not begin until the pretest requirements in sections 10.3.1 through 10.3.4 have been met.

10.3.1 Perform the horizontal straightness check described in section 8.2 on the probe assembly that will be calibrated in the wind tunnel.

10.3.2 Perform a leak check in accordance with section 8.4.

10.3.3 Except as noted in section 10.3.3.3, calibrate all differential pressure-measuring devices to be used in the probe calibrations, using the following procedures. At a minimum, calibrate these devices on each day that probe calibrations are performed.

10.3.3.1 Procedure. Before each wind tunnel use, all differential pressure-measuring devices shall be calibrated against the reference device specified in section 6.4.3 using a common pressure source. Perform the calibration at three reference pressures representing 30, 60, and 90 percent of the full-scale range of the pressure-measuring device being calibrated. For an inclined-vertical manometer, perform separate calibrations on the inclined and vertical portions of the measurement scale, considering each portion of the scale to be a separate full-scale range. [For example, for a manometer with a 0- to 2.5-cm H_2O (0- to 1-in. H_2O) inclined scale and a 2.5- to 12.7-cm H_2O (1- to 5-in. H_2O) vertical scale, calibrate the inclined portion at 7.6, 15.2, and 22.9 mm H_2O (0.3, 0.6, and 0.9 in. H_2O), and calibrate the vertical portion at 3.8, 7.6, and 11.4 cm H_2O (1.5, 3.0, and 4.5 in. H_2O).] Alternatively, for the vertical portion of the scale, use three evenly spaced reference pressures, one of which is equal to or higher than the highest differential pressure expected in field applications.

10.3.3.2 Acceptance criteria. At each pressure setting, the two pressure readings made using the reference device and the pressure-measuring device being calibrated shall agree to within ±2 percent of full scale of the device being calibrated or 0.5 mm H_2O (0.02 in. H_2O), whichever is less restrictive. For an inclined-vertical manometer, these requirements shall be met separately using the respective full-scale upper limits of the inclined and vertical portions of the scale. Differential pressure-measuring devices not meeting the #2 percent of full scale or 0.5 mm H_2O (0.02 in. H_2O) calibration requirement shall not be used.

10.3.3.3 Exceptions. Any precision manometer that meets the specifications for a reference device in section 6.4.3 and that is not used for field testing does not require calibration, but must be leveled and zeroed before each wind tunnel use. Any pressure device used exclusively for yaw nulling does not require calibration, but shall be checked for responsiveness to rotation of the probe prior to each wind tunnel use.

10.3.4 Calibrate digital inclinometers on each day of wind tunnel or field testing (prior to beginning testing) using the following procedures. Calibrate the inclinometer according to the manufacturer's calibration procedures. In addition, use a triangular block (illustrated in Figure 2F–12) with a known angle, θ independently determined using a protractor or equivalent device, between two adjacent sides to verify the inclinometer readings.

NOTE: If other angle-measuring devices meeting the provisions of section 6.2.3 are used in place of a digital inclinometer, comparable calibration procedures shall be performed on such devices.)

Secure the triangular block in a fixed position. Place the inclinometer on one side of the block (side A) to measure the angle of inclination (R_1). Repeat this measurement on the adjacent side of the block (side B) using the inclinometer to obtain a second angle reading (R_2). The difference of the sum of the two readings from 180° (i.e., $180° - R_1 - R_2$) shall be within ±2° of the known angle, Θ

10.4 Placement of Reference Scribe Line. Prior to the first calibration of a probe, a line shall be permanently inscribed on the main probe sheath to serve as a reference mark for determining yaw angles. Annex C in section 18 of this method gives a guideline for placement of the reference scribe line.

10.4.1 This reference scribe line shall meet the specifications in sections 6.1.6.1 and 6.1.6.3 of this method. To verify that the alignment specification in section 6.1.6.3 is

met, secure the probe in a horizontal position and measure the rotational angle of each scribe line and scribe line segment using an angle-measuring device that meets the specifications in section 6.2.1 or 6.2.3. For any scribe line that is longer than 30.5 cm (12 in.), check the line's rotational position at 30.5-cm (12-in.) intervals. For each line segment that is 30.5 cm (12 in.) or less in length, check the rotational position at the two endpoints of the segment. To meet the alignment specification in section 6.1.6.3, the minimum and maximum of all of the rotational angles that are measured along the full length of the main probe must not differ by more than 2°.

NOTE: A short reference scribe line segment [e.g., 15.2 cm (6 in.) or less in length] meeting the alignment specifications in section 6.1.6.3 is fully acceptable under this method. See section 18.1.1.1 of Annex A for an example of a probe marking procedure, suitable for use with a short reference scribe line.

10.4.2 The scribe line should be placed on the probe first and then its offset from the yaw-null position established (as specified in section 10.5). The rotational position of the reference scribe line relative to the yaw-null position of the probe, as determined by the yaw angle calibration procedure in section 10.5, is defined as the reference scribe line rotational offset, R_{SLO}. The reference scribe line rotational offset shall be recorded and retained as part of the probe's calibration record.

10.4.3 Scribe line for automated probes. A scribe line may not be necessary for an automated probe system if a reference rotational position of the probe is built into the probe system design. For such systems, a ''flat'' (or comparable, clearly identifiable physical characteristic) should be provided on the probe casing or flange plate to ensure that the reference position of the probe assembly remains in a vertical or horizontal position. The rotational offset of the flat (or comparable, clearly identifiable physical characteristic) needed to orient the reference position of the probe assembly shall be recorded and maintained as part of the automated probe system's specifications.

10.5 Yaw Angle Calibration Procedure. For each probe used to measure yaw angles with this method, a calibration procedure shall be performed in a wind tunnel meeting the specifications in section 10.1 to determine the rotational position of the reference scribe line relative to the probe's yaw-null position. This procedure shall be performed on the main probe with all devices that will be attached to the main probe in the field [such as thermocouples or resistance temperature detectors (RTDs)] that may affect the flow around the probe head. Probe shaft extensions that do not affect flow around the probe head need not be attached during calibration. At a minimum, this procedure shall include the following steps.

10.5.1 Align and lock the angle-measuring device on the reference scribe line. If a marking procedure (such as that described in section 18.1.1.1) is used, align the angle-measuring device on a mark within ±1° of the rotational position of the reference scribe line. Lock the angle-measuring device onto the probe sheath at this position.

10.5.2 Zero the pressure-measuring device used for yaw nulling.

10.5.3 Insert the probe assembly into the wind tunnel through the entry port, positioning the probe's impact port at the calibration location. Check the responsiveness of the pressure-measurement device to probe rotation, taking corrective action if the response is unacceptable.

10.5.4 Ensure that the probe is in a horizontal position, using a carpenter's level.

10.5.5 Rotate the probe either clockwise or counterclockwise until a yaw null ($P_2 = P_3$) is obtained.

10.5.6 Use the reading displayed by the angle-measuring device at the yaw-null position to determine the magnitude of the reference scribe line rotational offset, R_{SLO}, as defined in section 3.15. Annex D in section 18 of this method provides a recommended procedure for determining the magnitude of R_{SLO} with a digital inclinometer and a second procedure for determining the magnitude of R_{SLO} with a protractor wheel and pointer device. Table 2F–6 presents an example data form and Table 2F–7 is a look-up table with the recommended procedure. Procedures other than those recommended in Annex D in section 18 may be used, if they can determine R_{SLO} to within ±1° and are explained in detail in the field test report. The algebraic sign of R_{SLO} will either be positive, if the rotational position of the reference scribe line (as viewed from the ''tail'' end of the probe) is clockwise, or negative, if counterclockwise with respect to the probe's yaw-null position. (This is illustrated in Figure 2F–13.)

10.5.7 The steps in sections 10.5.3 through 10.5.6 shall be performed twice at each of the velocities at which the probe will be calibrated (in accordance with section 10.6). Record the values of R_{SLO}.

10.5.8 The average of all of the R_{SLO} values shall be documented as the reference scribe line rotational offset for the probe.

10.5.9 Use of reference scribe line offset. The reference scribe line rotational offset shall be used to determine the yaw angle of flow in accordance with section 8.9.4.

10.6 Pitch Angle and Velocity Pressure Calibrations. Use the procedures in sections 10.6.1 through 10.6.16 to generate an appropriate set (or sets) of pitch angle and velocity pressure calibration curves for each probe. The calibration procedure shall be

performed on the main probe and all devices that will be attached to the main probe in the field (e.g., thermocouple or RTDs) that may affect the flow around the probe head. Probe shaft extensions that do not affect flow around the probe head need not be attached during calibration. (Note: If a sampling nozzle is part of the assembly, a wind tunnel demonstration shall be performed that shows the probe's ability to measure velocity and yaw null is not impaired when the nozzle is drawing a sample.) The calibration procedure involves generating two calibration curves, F_1 versus pitch angle and F_2 versus pitch angle. To generate these two curves, F_1 and F_2 shall be derived using Equations 2F–1 and 2F–2, below. Table 2F–8 provides an example wind tunnel calibration data sheet, used to log the measurements needed to derive these two calibration curves.

10.6.1 Calibration velocities. The tester may calibrate the probe at two nominal wind tunnel velocity settings of 18.3 m/sec and 27.4 m/sec (60 ft/sec and 90 ft/sec) and average the results of these calibrations, as described in section 10.6.16.1, in order to generate a set of calibration curves. If this option is selected, this single set of calibration curves may be used for all field applications over the entire velocity range allowed by the method. Alternatively, the tester may customize the probe calibration for a particular field test application (or for a series of applications), based on the expected average velocity(ies) at the test site(s). If this option is selected, generate each set of calibration curves by calibrating the probe at two nominal wind tunnel velocity settings, at least one of which is greater than or equal to the expected average velocity(ies) for the field application(s), and average the results as described in section 10.6.16.1. Whichever calibration option is selected, the probe calibration coefficients (F_2 values) obtained at the two nominal calibration velocities shall, for the same pitch angle setting, meet the conditions specified in section 10.6.16.

10.6.2 Pitch angle calibration curve (F_1 versus pitch angle). The pitch angle calibration involves generating a calibration curve of calculated F_1 values versus tested pitch angles, where F_1 is the ratio of the pitch pressure to the velocity pressure, i.e.,

$$F_1 = \frac{(P_4 - P_5)}{(P_1 - P_2)} \qquad \text{Eq. 2F-1}$$

See Figure 2F–14 for an example F_1 versus pitch angle calibration curve.

10.6.3 Velocity calibration curve (F_2 versus pitch angle). The velocity calibration involves generating a calibration curve of the 3–D probe's F_2 coefficient against the tested pitch angles, where

$$F_2 = C_p \sqrt{\frac{\Delta P_{std}}{(P_1 - P_2)}} \qquad \text{Eq. 2F-2}$$

and

C_p = calibration pitot tube coefficient, and
ΔP_{std} = velocity pressure from the calibration pitot tube.

See Figure 2F–15 for an example F_2 versus pitch angle calibration curve.

10.6.4 Connect the tested probe and calibration pitot probe to their respective pressure-measuring devices. Zero the pressure-measuring devices. Inspect and leak-check all pitot lines; repair or replace, if necessary. Turn on the fan, and allow the wind tunnel air flow to stabilize at the first of the two selected nominal velocity settings.

10.6.5 Position the calibration pitot tube at its measurement location (determined as outlined in section 6.11.4.3), and align the tube so that its tip is pointed directly into the flow. Ensure that the entry port surrounding the tube is properly sealed. The calibration pitot tube may either remain in the wind tunnel throughout the calibration, or be removed from the wind tunnel while measurements are taken with the probe being calibrated.

10.6.6 Set up the pitch protractor plate on the tested probe's entry port to establish the pitch angle positions of the probe to within ±2°.

10.6.7 Check the zero setting of each pressure-measuring device.

10.6.8 Insert the tested probe into the wind tunnel and align it so that its P_1 pressure port is pointed directly into the flow and is positioned within the calibration location (as defined in section 3.20). Secure the probe at the 0° pitch angle position. Ensure that the entry port surrounding the probe is properly sealed.

10.6.9 Read the differential pressure from the calibration pitot tube (ΔP_{std}), and record its value. Read the barometric pressure to within ±2.5 mm Hg (±0.1 in. Hg) and the temperature in the wind tunnel to within 0.6°C (1°F). Record these values on a data form similar to Table 2F–8.

10.6.10 After the tested probe's differential pressure gauges have had sufficient time to stabilize, yaw null the probe, then obtain differential pressure readings for (P_1–P_2) and (P_4–P_5). Record the yaw angle and differential pressure readings. After taking these readings, ensure that the tested probe has remained at the yaw-null position.

10.6.11 Either take paired differential pressure measurements with both the calibration pitot tube and tested probe (according to sections 10.6.9 and 10.6.10) or take readings only with the tested probe (according to section 10.6.10) in 5° increments over the pitch-angle range for which the probe is

to be calibrated. The calibration pitch-angle range shall be symmetric around 0° and shall exceed the largest pitch angle expected in the field by 5°. At a minimum, probes shall be calibrated over the range of −15° to +15°. If paired calibration pitot tube and tested probe measurements are not taken at each pitch angle setting, the differential pressure from the calibration pitot tube shall be read, at a minimum, before taking the tested probe's differential pressure reading at the first pitch angle setting and after taking the tested probe's differential pressure readings at the last pitch angle setting in each replicate.

10.6.12 Perform a second replicate of the procedures in sections 10.6.5 through 10.6.11 at the same nominal velocity setting.

10.6.13 For each replicate, calculate the F_1 and F_2 values at each pitch angle. At each pitch angle, calculate the percent difference between the two F_2 values using Equation 2F–3.

$$\%\text{Diff} = \frac{F_2^{max} - F_2^{min}}{F_2^{min}} \times 100\% \quad \text{Eq. 2F-3}$$

If the percent difference is less than or equal to 2 percent, calculate an average F_1 value and an average F_2 value at that pitch angle. If the percent difference is greater than 2 percent and less than or equal to 5 percent, perform a third repetition at that angle and calculate an average F_1 value and an average F_2 value using all three repetitions. If the percent difference is greater than 5 percent, perform four additional repetitions at that angle and calculate an average F_1 value and an average F_2 value using all six repetitions. When additional repetitions are required at any pitch angle, move the probe by at least 5° and then return to the specified pitch angle before taking the next measurement. Record the average values on a form similar to Table 2F–9.

10.6.14 Repeat the calibration procedures in sections 10.6.5 through 10.6.13 at the second selected nominal wind tunnel velocity setting.

10.6.15 Velocity drift check. The following check shall be performed, except when paired calibration pitot tube and tested probe pressure measurements are taken at each pitch angle setting. At each velocity setting, calculate the percent difference between consecutive differential pressure measurements made with the calibration pitot tube. If a measurement differs from the previous measurement by more than 2 percent or 0.25 mm H_2O (0.01 in. H_2O), whichever is less restrictive, the calibration data collected between these calibration pitot tube measurements may not be used, and the measurements shall be repeated.

10.6.16 Compare the averaged F_2 coefficients obtained from the calibrations at the two selected nominal velocities, as follows. At each pitch angle setting, use Equation 2F–3 to calculate the difference between the corresponding average F_2 values at the two calibration velocities. At each pitch angle in the −15° to +15° range, the percent difference between the average F_2 values shall not exceed 3.0 percent. For pitch angles outside this range (i.e., less than −15°0 and greater than +15°), the percent difference shall not exceed 5.0 percent.

10.6.16.1 If the applicable specification in section 10.6.16 is met at each pitch angle setting, average the results obtained at the two nominal calibration velocities to produce a calibration record of F_1 and F_2 at each pitch angle tested. Record these values on a form similar to Table 2F–9. From these values, generate one calibration curve representing F_1 versus pitch angle and a second curve representing F_2 versus pitch angle. Computer spreadsheet programs may be used to graph the calibration data and to develop polynomial equations that can be used to calculate pitch angles and axial velocities.

10.6.16.2 If the applicable specification in section 10.6.16 is exceeded at any pitch angle setting, the probe shall not be used unless: (1) the calibration is repeated at that pitch angle and acceptable results are obtained or (2) values of F_1 and F_2 are obtained at two nominal velocities for which the specifications in section 10.6.16 are met across the entire pitch angle range.

10.7 Recalibration. Recalibrate the probe using the procedures in section 10 either within 12 months of its first field use after its most recent calibration or after 10 field tests (as defined in section 3.4), whichever occurs later. In addition, whenever there is visible damage to the 3-D head, the probe shall be recalibrated before it is used again.

10.8 Calibration of pressure-measuring devices used in field tests. Before its initial use in a field test, calibrate each pressure-measuring device (except those used exclusively for yaw nulling) using the three-point calibration procedure described in section 10.3.3. The device shall be recalibrated according to the procedure in section 10.3.3 no later than 90 days after its first field use following its most recent calibration. At the discretion of the tester, more frequent calibrations (e.g., after a field test) may be performed. No adjustments, other than adjustments to the zero setting, shall be made to the device between calibrations.

10.8.1 Post-test calibration check. A single-point calibration check shall be performed on each pressure-measuring device after completion of each field test. At the discretion of the tester, more frequent single-point calibration checks (e.g., after one or more field test runs) may be performed. It is recommended that the post-test check be

performed before leaving the field test site. The check shall be performed at a pressure between 50 and 90 percent of full scale by taking a common pressure reading with the tested device and a reference pressure-measuring device (as described in section 6.4.4) or by challenging the tested device with a reference pressure source (as described in section 6.4.4) or by performing an equivalent check using a reference device approved by the Administrator.

10.8.2 Acceptance criterion. At the selected pressure setting, the pressure readings made using the reference device and the tested device shall agree to within 3 percent of full scale of the tested device or 0.8 mm H_2O (0.03 in. H_2O), whichever is less restrictive. If this specification is met, the test data collected during the field test are valid. If the specification is not met, all test data collected since the last successful calibration or calibration check are invalid and shall be repeated using a pressure-measuring device with a current, valid calibration. Any device that fails the calibration check shall not be used in a field test until a successful recalibration is performed according to the procedures in section 10.3.3.

10.9 Temperature Gauges. Same as Method 2, section 4.3. The alternative thermocouple calibration procedures outlined in Emission Measurement Center (EMC) Approved Alternative Method (ALT–011) ''Alternative Method 2 Thermocouple Calibration Procedure'' may be performed. Temperature gauges shall be calibrated no more than 30 days prior to the start of a field test or series of field tests and recalibrated no more than 30 days after completion of a field test or series of field tests.

10.10 Barometer. Same as Method 2, section 4.4. The barometer shall be calibrated no more than 30 days prior to the start of a field test or series of field tests.

11.0 Analytical Procedure

Sample collection and analysis are concurrent for this method (see section 8.0).

12.0 Data Analysis and Calculations

These calculations use the measured yaw angle, derived pitch angle, and the differential pressure and temperature measurements at individual traverse points to derive the axial flue gas velocity ($v_{a(i)}$) at each of those points. The axial velocity values at all traverse points that comprise a full stack or duct traverse are then averaged to obtain the average axial flue gas velocity ($v_{a\ (avg)}$). Round off figures only in the final calculation of reported values.

12.1 Nomenclature

A = Cross-sectional area of stack or duct, m^2 (ft^2).

B_{ws} = Water vapor in the gas stream (from Method 4 or alternative), proportion by volume.

K_p Conversion factor (a constant),

$$34.97\frac{m}{sec}\left[\frac{(g/g\text{-}mole)(mm\ Hg)}{(^\circ K)(mm\ H_2O)}\right]^{1/2}$$

for the metric system, and

$$85.49\frac{ft}{sec}\left[\frac{(lb/lb\text{-}mole)(in.\ Hg)}{(^\circ R)(in.\ H_2O)}\right]^{1/2}$$

for the English system.

M_d = Molecular weight of stack or duct gas, dry basis (see section 8.13), g/g-mole (lb/lb-mole).

M_s = Molecular weight of stack or duct gas, wet basis, g/g-mole (lb/lb-mole).

$$M_s = M_d(1-B_{ws}) + 18.0B_{ws} \qquad \text{Eq. 2F-4}$$

P_{bar} = Barometric pressure at measurement site, mm Hg (in. Hg).

P_g = Stack or duct static pressure, mm H_2O (in. H_2O).

P_s = Absolute stack or duct pressure, mm Hg (in. Hg),

$$P_s = P_{bar} + \frac{P_g}{13.6} \qquad \text{Eq. 2F-5}$$

P_{std} = Standard absolute pressure, 760 mm Hg (29.92 in. Hg).

13.6 = Conversion from mm H_2O (in. H_2O) to mm Hg (in. Hg).

Q_{sd} = Average dry-basis volumetric stack or duct gas flow rate corrected to standard conditions, dscm/hr (dscf/hr).

Q_{sw} = Average wet-basis volumetric stack or duct gas flow rate corrected to standard conditions, wscm/hr (wscf/hr).

$T_{s(avg)}$ = Average absolute stack or duct gas temperature across all traverse points.

$t_{s(i)}$ = Stack or duct gas temperature, C (F), at traverse point i.

$T_{s(i)}$ = Absolute stack or duct gas temperature, K (R), at traverse point i,

$$T_{s(i)} = 273 + t_{s(i)} \qquad \text{Eq. 2F-6}$$

for the metric system, and

$$T_{s(i)} = 460 + t_{s(i)} \qquad \text{Eq. 2F-7}$$

for the English system.

T_{std} = Standard absolute temperature, 293°K (528°R).

$F_{1(i)}$ = Pitch angle ratio, applicable at traverse point i, dimensionless.

$F_{2(i)}$ = 3-D probe velocity calibration coefficient, applicable at traverse point i, dimensionless.

$(P_4\text{-}P_5)_i$ = Pitch differential pressure of stack or duct gas flow, mm H_2O (in. H_2O), at traverse point i.

$(P_1\text{-}P_2)_i$ = Velocity head (differential pressure) of stack or duct gas flow, mm H_2O (in. H_2O), at traverse point i.

$v_{a(i)}$ = Reported stack or duct gas axial velocity, m/sec (ft/sec), at traverse point i.

$v_{a(avg)}$ = Average stack or duct gas axial velocity, m/sec (ft/sec), across all traverse points.

3,600 = Conversion factor, sec/hr.

18.0 = Molecular weight of water, g/g-mole (lb/lb-mole).

$\theta_{y(i)}$ = Yaw angle, degrees, at traverse point i.

$\theta_{p(i)}$ = Pitch angle, degrees, at traverse point i.

n = Number of traverse points.

12.2 Traverse Point Velocity Calculations. Perform the following calculations from the measurements obtained at each traverse point.

12.2.1 Selection of calibration curves. Select calibration curves as described in section 10.6.1.

12.2.2 Traverse point pitch angle ratio. Use Equation 2F–1, as described in section 10.6.2, to calculate the pitch angle ratio, $F_{1(i)}$, at each traverse point.

12.2.3 Pitch angle. Use the pitch angle ratio, $F_{1(i)}$, to derive the pitch angle, $\theta_{p(i)}$, at traverse point i from the F_1 versus pitch angle calibration curve generated under section 10.6.16.1.

12.2.4 Velocity calibration coefficient. Use the pitch angle, $\theta_{p(i)}$, to obtain the probe velocity calibration coefficient, $F_{2(i)}$, at traverse point i from the ''velocity pressure calibration curve,'' i.e., the F_2 versus pitch angle calibration curve generated under section 10.6.16.1.

12.2.5 Axial velocity. Use the following equation to calculate the axial velocity, $v_{a(i)}$, from the differential pressure $(P_1\text{-}P_2)_i$ and yaw angle, $\theta_{y(i)}$, measured at traverse point i and the previously calculated values for the velocity calibration coefficient, $F_{2(i)}$, absolute stack or duct standard temperature, $T_{s(i)}$, absolute stack or duct pressure, P_s, molecular weight, M_s, and pitch angle, ''$\theta_{p(i)}$.

$$v_{a(i)} = K_p F_{2(i)} \sqrt{\frac{(P_1 - P_2)_i T_{s(i)}}{P_s M_s}} \left(\cos\theta_{y(i)}\right)\left(\cos\theta_{p(i)}\right) \qquad \text{Eq. 2F-8}$$

12.2.6 Handling multiple measurements at a traverse point. For pressure or temperature devices that take multiple measurements at a traverse point, the multiple measurements (or where applicable, their square roots) may first be averaged and the resulting average values used in the equations above. Alternatively, the individual measurements may be used in the equations above and the resulting multiple calculated values may then be averaged to obtain a single traverse point value. With either approach, all of the individual measurements recorded at a traverse point must be used in calculating the applicable traverse point value.

12.3 Average Axial Velocity in Stack or Duct. Use the reported traverse point axial velocity in the following equation.

$$v_{a(avg)} = \frac{\sum_{i=1}^{n} v_{a(i)}}{n} \qquad \text{Eq. 2F-9}$$

12.4 Acceptability of Results. The test results are acceptable and the calculated value of $v_{a(avg)}$ may be reported as the average axial velocity for the test run if the conditions in either section 12.4.1 or 12.4.2 are met.

12.4.1 The calibration curves were generated at nominal velocities of 18.3 m/sec and 27.4 m/sec (60 ft/sec and 90 ft/sec).

12.4.2 The calibration curves were generated at nominal velocities other than 18.3 m/sec and 27.4 m/sec (60 ft/sec and 90 ft/sec), and the value of $v_{a(avg)}$ obtained using Equation 2F–9 is less than or equal to at least one of the nominal velocities used to derive the F_1 and F_2 calibration curves.

12.4.3 If the conditions in neither section 12.4.1 nor section 12.4.2 are met, the test results obtained in Equation 2F–9 are not acceptable, and the steps in sections 12.2 and 12.3 must be repeated using a set of F_1 and F_2 calibration curves that satisfies the conditions specified in section 12.4.1 or 12.4.2.

12.5 Average Gas Wet Volumetric Flow Rate in Stack or Duct. Use the following equation to compute the average volumetric flow rate on a wet basis.

$$Q_{sw} = 3{,}600\left(v_{a(avg)}\right)(A)\left(\frac{T_{std}}{T_{s(avg)}}\right)\left(\frac{P_s}{P_{std}}\right) \qquad \text{Eq. 2F-10}$$

12.6 Average Gas Dry Volumetric Flow Rate in Stack or Duct. Use the following equation to compute the average volumetric flow rate on a dry basis.

$$Q_{sd} = 3{,}600\left(1 - B_{ws}\right)\left(v_{a(avg)}\right)(A)\left(\frac{T_{std}}{T_{s(avg)}}\right)\left(\frac{P_s}{P_{std}}\right) \qquad \text{Eq. 2F-11}$$

13.0 Method Performance. [Reserved]

14.0 Pollution Prevention. [Reserved]

15.0 Waste Management. [Reserved]

16.0 Reporting

16.1 Field Test Reports. Field test reports shall be submitted to the Agency according to applicable regulatory requirements. Field test reports should, at a minimum, include the following elements.

16.1.1 Description of the source. This should include the name and location of the test site, descriptions of the process tested, a description of the combustion source, an accurate diagram of stack or duct cross-sectional area at the test site showing the dimensions of the stack or duct, the location of the test ports, and traverse point locations and identification numbers or codes. It should also include a description and diagram of the stack or duct layout, showing the distance of the test location from the nearest upstream and downstream disturbances and all structural elements (including breachings, baffles, fans, straighteners, etc.) affecting the flow pattern. If the source and test location descriptions have been previously submitted to the Agency in a document (e.g., a monitoring plan or test plan), referencing the document in lieu of including this information in the field test report is acceptable.

16.1.2 Field test procedures. These should include a description of test equipment and test procedures. Testing conventions, such as traverse point numbering and measurement sequence (e.g., sampling from center to wall, or wall to center), should be clearly stated. Test port identification and directional reference for each test port should be included on the appropriate field test data sheets.

16.1.3 Field test data.

16.1.3.1 Summary of results. This summary should include the dates and times of testing and the average axial gas velocity and the average flue gas volumetric flow results for each run and tested condition.

16.1.3.2 Test data. The following values for each traverse point should be recorded and reported:

(a) P_1-P_2 and P_4-P_5 differential pressures

(b) Stack or duct gas temperature at traverse point i ($t_{s(i)}$)

(c) Absolute stack or duct gas temperature at traverse point i ($T_{s(i)}$)

(d) Yaw angle at each traverse point i ($\theta_{y(i)}$)

(e) Pitch angle at each traverse point i ($\theta_{p(i)}$)

(f) Stack or duct gas axial velocity at traverse point i ($v_{a(i)}$)

16.1.3.3 The following values should be reported once per run:

(a) Water vapor in the gas stream (from Method 4 or alternative), proportion by volume (B_{ws}), measured at the frequency specified in the applicable regulation

(b) Molecular weight of stack or duct gas, dry basis (M_d)

(c) Molecular weight of stack or duct gas, wet basis (M_s)

(d) Stack or duct static pressure (P_g)

(e) Absolute stack or duct pressure (P_s)

(f) Carbon dioxide concentration in the flue gas, dry basis ($\%_d$ CO_2)

(g) Oxygen concentration in the flue gas, dry basis ($\%_d$ O_2)

(h) Average axial stack or duct gas velocity ($v_{a(avg)}$) across all traverse points

(i) Gas volumetric flow rate corrected to standard conditions, dry or wet basis as required by the applicable regulation (Q_{sd} or Q_{sw})

16.1.3.4 The following should be reported once per complete set of test runs:

(a) Cross-sectional area of stack or duct at the test location (A)

(b) Measurement system response time (sec)

(c) Barometric pressure at measurement site (P_{bar})

16.1.4 Calibration data. The field test report should include calibration data for all probes and test equipment used in the field

test. At a minimum, the probe calibration data reported to the Agency should include the following:

(a) Date of calibration

(b) Probe type

(c) Probe identification number(s) or code(s)

(d) Probe inspection sheets

(e) Pressure measurements and intermediate calculations of F_1 and F_2 at each pitch angle used to obtain calibration curves in accordance with section 10.6 of this method

(f) Calibration curves (in graphic or equation format) obtained in accordance with sections 10.6.11 of this method

(g) Description and diagram of wind tunnel used for the calibration, including dimensions of cross-sectional area and position and size of the test section

(h) Documentation of wind tunnel qualification tests performed in accordance with section 10.1 of this method

16.1.5 Quality Assurance. Specific quality assurance and quality control procedures used during the test should be described.

17.0 Bibliography

(1) 40 CFR Part 60, Appendix A, Method 1—Sample and velocity traverses for stationary sources.

(2) 40 CFR Part 60, Appendix A, Method 2H—Determination of stack gas velocity taking into account velocity decay near the stack wall.

(3) 40 CFR Part 60, Appendix A, Method 2—Determination of stack gas velocity and volumetric flow rate (Type S pitot tube).

(4) 40 CFR Part 60, Appendix A, Method 3—Gas analysis for carbon dioxide, oxygen, excess air, and dry molecular weight.

(5) 40 CFR Part 60, Appendix A, Method 3A—Determination of oxygen and carbon dioxide concentrations in emissions from stationary sources (instrumental analyzer procedure).

(6) 40 CFR Part 60, Appendix A, Method 4—Determination of moisture content in stack gases.

(7) Emission Measurement Center (EMC) Approved Alternative Method (ALT–011) ''Alternative Method 2 Thermocouple Calibration Procedure.''

(8) Electric Power Research Institute, Interim Report EPRI TR–106698, ''Flue Gas Flow Rate Measurement Errors,'' June 1996.

(9) Electric Power Research Institute, Final Report EPRI TR–108110, ''Evaluation of Heat Rate Discrepancy from Continuous Emission Monitoring Systems,'' August 1997.

(10) Fossil Energy Research Corporation, Final Report, ''Velocity Probe Tests in Non-axial Flow Fields,'' November 1998, Prepared for the U.S. Environmental Protection Agency.

(11) Fossil Energy Research Corporation, ''Additional Swirl Tunnel Tests: E–DAT and T–DAT Probes,'' February 24, 1999, Technical Memorandum Prepared for U.S. Environmental Protection Agency, P.O. No. 7W–1193–NALX.

(12) Massachusetts Institute of Technology, Report WBWT–TR–1317, ''Calibration of Eight Wind Speed Probes Over a Reynolds Number Range of 46,000 to 725,000 Per Foot, Text and Summary Plots,'' Plus appendices, October 15, 1998, Prepared for The Cadmus Group, Inc.

(13) National Institute of Standards and Technology, Special Publication 250, ''NIST Calibration Services Users Guide 1991,'' Revised October 1991, U.S. Department of Commerce, p. 2.

(14) National Institute of Standards and Technology, 1998, ''Report of Special Test of Air Speed Instrumentation, Four Prandtl Probes, Four S–Type Probes, Four French Probes, Four Modified Kiel Probes,'' Prepared for the U.S. Environmental Protection Agency under IAG #DW13938432–01–0.

(15) National Institute of Standards and Technology, 1998, ''Report of Special Test of Air Speed Instrumentation, Five Autoprobes,'' Prepared for the U.S. Environmental Protection Agency under IAG #DW13938432–01–0.

(16) National Institute of Standards and Technology, 1998, ''Report of Special Test of Air Speed Instrumentation, Eight Spherical Probes,'' Prepared for the U.S. Environmental Protection Agency under IAG #DW13938432–01–0.

(17) National Institute of Standards and Technology, 1998, ''Report of Special Test of Air Speed Instrumentation, Four DAT Probes,'' Prepared for the U.S. Environmental Protection Agency under IAG #DW13938432–01–0.

(18) Norfleet, S.K., ''An Evaluation of Wall Effects on Stack Flow Velocities and Related Overestimation Bias in EPA's Stack Flow Reference Methods,'' EPRI CEMS User's Group Meeting, New Orleans, Louisiana, May 13–15, 1998.

(19) Page, J.J., E.A. Potts, and R.T. Shigehara, ''3–D Pitot Tube Calibration Study,'' EPA Contract No. 68–D1–0009, Work Assignment No. I–121, March 11, 1993.

(20) Shigehara, R.T., W.F. Todd, and W.S. Smith, ''Significance of Errors in Stack Sampling Measurements,'' Presented at the Annual Meeting of the Air Pollution Control Association, St. Louis, Missouri, June 14–19, 1970.

(21) The Cadmus Group, Inc., May 1999, ''EPA Flow Reference Method Testing and Analysis: Findings Report,'' EPA/430–R–99–009.

(22) The Cadmus Group, Inc., 1998, ''EPA Flow Reference Method Testing and Analysis: Data Report, Texas Utilities,

DeCordova Steam Electric Station, Volume I: Test Description and Appendix A (Data Distribution Package),'' EPA/430–R–98–015a.

(23) The Cadmus Group, Inc., 1998, ''EPA Flow Reference Method Testing and Analysis: Data Report, Texas Utilities, Lake Hubbard Steam Electric Station, Volume I: Test Description and Appendix A (Data Distribution Package),'' EPA/430–R–98–017a.

(24) The Cadmus Group, Inc., 1998, ''EPA Flow Reference Method Testing and Analysis: Data Report, Pennsylvania Electric Co., G.P.U. Genco Homer City Station: Unit 1, Volume I: Test Description and Appendix A (Data Distribution Package),'' EPA/430–R–98–018a.

(25) The Cadmus Group, Inc., 1997, ''EPA Flow Reference Method Testing and Analysis: Wind Tunnel Experimental Results,'' EPA/430–R–97–013.

18.0 Annexes

Annex A, C, and D describe recommended procedures for meeting certain provisions in sections 8.3, 10.4, and 10.5 of this method. Annex B describes procedures to be followed when using the protractor wheel and pointer assembly to measure yaw angles, as provided under section 8.9.1.

18.1 Annex A—Rotational Position Check. The following are recommended procedures that may be used to satisfy the rotational position check requirements of section 8.3 of this method and to determine the angle-measuring device rotational offset R_{ADO}.

18.1.1 Rotational position check with probe outside stack. Where physical constraints at the sampling location allow full assembly of the probe outside the stack and insertion into the test port, the following procedures should be performed before the start of testing. Two angle-measuring devices that meet the specifications in section 6.2.1 or 6.2.3 are required for the rotational position check. An angle measuring device whose position can be independently adjusted (e.g., by means of a set screw) after being locked into position on the probe sheath shall not be used for this check unless the independent adjustment is set so that the device performs exactly like a device without the capability for independent adjustment. That is, when aligned on the probe such a device must give the same reading as a device that does not have the capability of being independently adjusted. With the fully assembled probe (including probe shaft extensions, if any) secured in a horizontal position, affix one yaw angle-measuring device to the probe sheath and lock it into position on the reference scribe line specified in section 6.1.6.1. Position the second angle-measuring device using the procedure in section 18.1.1.1 or 18.1.1.2.

18.1.1.1 Marking procedure. The procedures in this section should be performed at each location on the fully assembled probe where the yaw angle-measuring device will be mounted during the velocity traverse. Place the second yaw angle-measuring device on the main probe sheath (or extension) at the position where a yaw angle will be measured during the velocity traverse. Adjust the position of the second angle-measuring device until it indicates the same angle (±1°) as the reference device, and affix the second device to the probe sheath (or extension). Record the angles indicated by the two angle-measuring devices on a form similar to Table 2F–2. In this position, the second angle-measuring device is considered to be properly positioned for yaw angle measurement. Make a mark, no wider than 1.6 mm (1/16 in.), on the probe sheath (or extension), such that the yaw angle-measuring device can be re-affixed at this same properly aligned position during the velocity traverse.

18.1.1.2 Procedure for probe extensions with scribe lines. If, during a velocity traverse the angle-measuring device will be affixed to a probe extension having a scribe line as specified in section 6.1.6.2, the following procedure may be used to align the extension's scribe line with the reference scribe line instead of marking the extension as described in section 18.1.1.1. Attach the probe extension to the main probe. Align and lock the second angle-measuring device on the probe extension's scribe line. Then, rotate the extension until both measuring devices indicate the same angle (±1°). Lock the extension at this rotational position. Record the angles indicated by the two angle-measuring devices on a form similar to Table 2F–2. An angle-measuring device may be aligned at any position on this scribe line during the velocity traverse, if the scribe line meets the alignment specification in section 6.1.6.3.

18.1.1.3 Post-test rotational position check. If the fully assembled probe includes one or more extensions, the following check should be performed immediately after the completion of a velocity traverse. At the discretion of the tester, additional checks may be conducted after completion of testing at any sample port. Without altering the alignment of any of the components of the probe assembly used in the velocity traverse, secure the fully assembled probe in a horizontal position. Affix an angle-measuring device at the reference scribe line specified in section 6.1.6.1. Use the other angle-measuring device to check the angle at each location where the device was checked prior to testing. Record the readings from the two angle-measuring devices.

18.1.2 Rotational position check with probe in stack. This section applies only to

probes that, due to physical constraints, cannot be inserted into the test port as fully assembled with all necessary extensions needed to reach the inner-most traverse point(s).

18.1.2.1 Perform the out-of-stack procedure in section 18.1.1 on the main probe and any attached extensions that will be initially inserted into the test port.

18.1.2.2 Use the following procedures to perform additional rotational position check(s) with the probe in the stack, each time a probe extension is added. Two angle-measuring devices are required. The first of these is the device that was used to measure yaw angles at the preceding traverse point, left in its properly aligned measurement position. The second angle-measuring device is positioned on the added probe extension. Use the applicable procedures in section 18.1.1.1 or 18.1.1.2 to align, adjust, lock, and mark (if necessary) the position of the second angle-measuring device to within ±1° of the first device. Record the readings of the two devices on a form similar to Table 2F–2.

18.1.2.3 The procedure in section 18.1.2.2 should be performed at the first port where measurements are taken. The procedure should be repeated each time a probe extension is re-attached at a subsequent port, unless the probe extensions are designed to be locked into a mechanically fixed rotational position (e.g., through use of interlocking grooves), which can be reproduced from port to port as specified in section 8.3.5.2.

18.2 Annex B—Angle Measurement Protocol for Protractor Wheel and Pointer Device. The following procedure shall be used when a protractor wheel and pointer assembly, such as the one described in section 6.2.2 and illustrated in Figure 2F–7 is used to measure the yaw angle of flow. With each move to a new traverse point, unlock, re-align, and re-lock the probe, angle-pointer collar, and protractor wheel to each other. At each such move, particular attention is required to ensure that the scribe line on the angle pointer collar is either aligned with the reference scribe line on the main probe sheath or is at the rotational offset position established under section 8.3.1. The procedure consists of the following steps:

18.2.1 Affix a protractor wheel to the entry port for the test probe in the stack or duct.

18.2.2 Orient the protractor wheel so that the 0° mark corresponds to the longitudinal axis of the stack or duct. For stacks, vertical ducts, or ports on the side of horizontal ducts, use a digital inclinometer meeting the specifications in section 6.2.1 to locate the 0° orientation. For ports on the top or bottom of horizontal ducts, identify the longitudinal axis at each test port and permanently mark the duct to indicate the 0° orientation. Once the protractor wheel is properly aligned, lock it into position on the test port.

18.2.3 Move the pointer assembly along the probe sheath to the position needed to take measurements at the first traverse point. Align the scribe line on the pointer collar with the reference scribe line or at the rotational offset position established under section 8.3.1. Maintaining this rotational alignment, lock the pointer device onto the probe sheath. Insert the probe into the entry port to the depth needed to take measurements at the first traverse point.

18.2.4 Perform the yaw angle determination as specified in sections 8.9.3 and 8.9.4 and record the angle as shown by the pointer on the protractor wheel. Then, take velocity pressure and temperature measurements in accordance with the procedure in section 8.9.5. Perform the alignment check described in section 8.9.6.

18.2.5 After taking velocity pressure measurements at that traverse point, unlock the probe from the collar and slide the probe through the collar to the depth needed to reach the next traverse point.

18.2.6 Align the scribe line on the pointer collar with the reference scribe line on the main probe or at the rotational offset position established under section 8.3.1. Lock the collar onto the probe.

18.2.7 Repeat the steps in sections 18.2.4 through 18.2.6 at the remaining traverse points accessed from the current stack or duct entry port.

18.2.8 After completing the measurement at the last traverse point accessed from a port, verify that the orientation of the protractor wheel on the test port has not changed over the course of the traverse at that port. For stacks, vertical ducts, or ports on the side of horizontal ducts, use a digital inclinometer meeting the specifications in section 6.2.1 to check the rotational position of the 0° mark on the protractor wheel. For ports on the top or bottom of horizontal ducts, observe the alignment of the angle wheel 0° mark relative to the permanent 0° mark on the duct at that test port. If these observed comparisons exceed ±2° of 0°, all angle and pressure measurements taken at that port since the protractor wheel was last locked into position on the port shall be repeated.

18.2.9 Move to the next stack or duct entry port and repeat the steps in sections 18.2.1 through 18.2.8.

18.3 Annex C—Guideline for Reference Scribe Line Placement. Use of the following guideline is recommended to satisfy the requirements of section 10.4 of this method. The rotational position of the reference scribe line should be either 90° or 180° from the probe's impact pressure port.

18.4 Annex D—Determination of Reference Scribe Line Rotational Offset. The following procedures are recommended for determining the magnitude and sign of a

probe's reference scribe line rotational offset, R_{SLO}. Separate procedures are provided for two types of angle-measuring devices: digital inclinometers and protractor wheel and pointer assemblies.

18.4.1 Perform the following procedures on the main probe with all devices that will be attached to the main probe in the field [such as thermocouples or resistance temperature detectors (RTDs)] that may affect the flow around the probe head. Probe shaft extensions that do not affect flow around the probe head need not be attached during calibration.

18.4.2 The procedures below assume that the wind tunnel duct used for probe calibration is horizontal and that the flow in the calibration wind tunnel is axial as determined by the axial flow verification check described in section 10.1.2. Angle-measuring devices are assumed to display angles in alternating 0° to 90° and 90° to 0° intervals. If angle-measuring devices with other readout conventions are used or if other calibration wind tunnel duct configurations are used, make the appropriate calculational corrections.

18.4.2.1 Position the angle-measuring device in accordance with one of the following procedures.

18.4.2.1.1 If using a digital inclinometer, affix the calibrated digital inclinometer to the probe. If the digital inclinometer can be independently adjusted after being locked into position on the probe sheath (e.g., by means of a set screw), the independent adjustment must be set so that the device performs exactly like a device without the capability for independent adjustment. That is, when aligned on the probe the device must give the same readings as a device that does not have the capability of being independently adjusted. Either align it directly on the reference scribe line or on a mark aligned with the scribe line determined according to the procedures in section 18.1.1.1. Maintaining this rotational alignment, lock the digital inclinometer onto the probe sheath.

18.4.2.1.2 If using a protractor wheel and pointer device, orient the protractor wheel on the test port so that the 0° mark is aligned with the longitudinal axis of the wind tunnel duct. Maintaining this alignment, lock the wheel into place on the wind tunnel test port. Align the scribe line on the pointer collar with the reference scribe line or with a mark aligned with the reference scribe line, as determined under section 18.1.1.1. Maintaining this rotational alignment, lock the pointer device onto the probe sheath.

18.4.2.2 Zero the pressure-measuring device used for yaw nulling.

18.4.2.3 Insert the probe assembly into the wind tunnel through the entry port, positioning the probe's impact port at the calibration location. Check the responsiveness of the pressure-measuring device to probe rotation, taking corrective action if the response is unacceptable.

18.4.2.4 Ensure that the probe is in a horizontal position using a carpenter's level.

18.4.2.5 Rotate the probe either clockwise or counterclockwise until a yaw null ($P_2=P_3$) is obtained.

18.4.2.6 Read and record the value of θ_{null}, the angle indicated by the angle-measuring device at the yaw-null position. Record the angle reading on a form similar to Table 2F–6. Do not associate an algebraic sign with this reading.

18.4.2.7 Determine the magnitude and algebraic sign of the reference scribe line rotational offset, R_{SLO}. The magnitude of R_{SLO} will be equal to either θ_{null} or $(90°-\theta_{null})$, depending on the angle-measuring device used. (See Table 2F–7 for a summary.) The algebraic sign of R_{SLO} will either be positive, if the rotational position of the reference scribe line is clockwise, or negative, if counterclockwise with respect to the probe's yaw-null position. Figure 2F–13 illustrates how the magnitude and sign of R_{SLO} are determined.

18.4.2.8 Perform the steps in sections 18.4.2.3 through 18.4.2.7 twice at each of the two calibration velocities selected for the probe under section 10.6. Record the values of R_{SLO} in a form similar to Table 2F–6.

18.4.2.9 The average of all R_{SLO} values is the reference scribe line rotational offset for the probe.

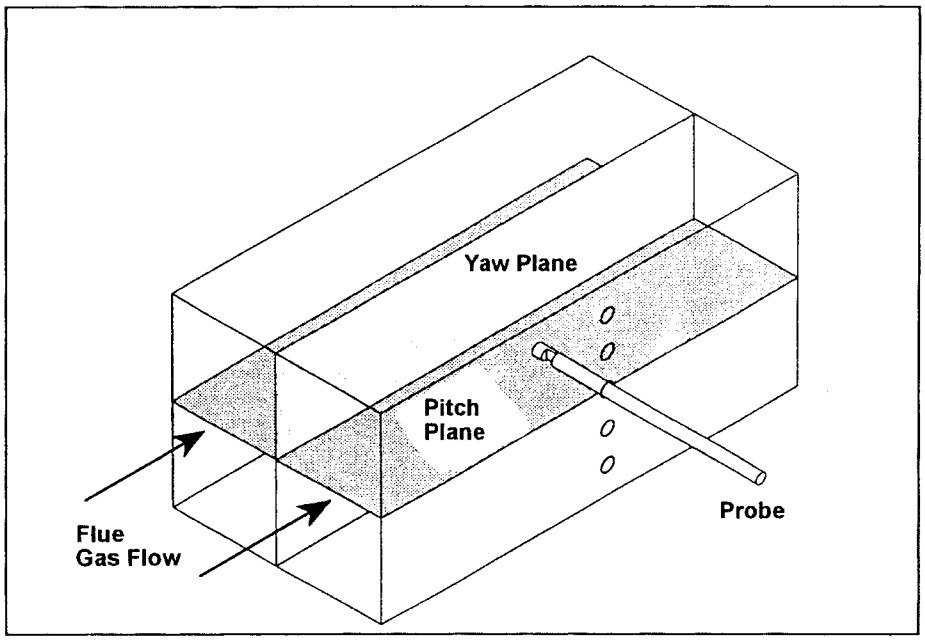

Figure 2F-1. Illustration of yaw and pitch planes in stack or duct.

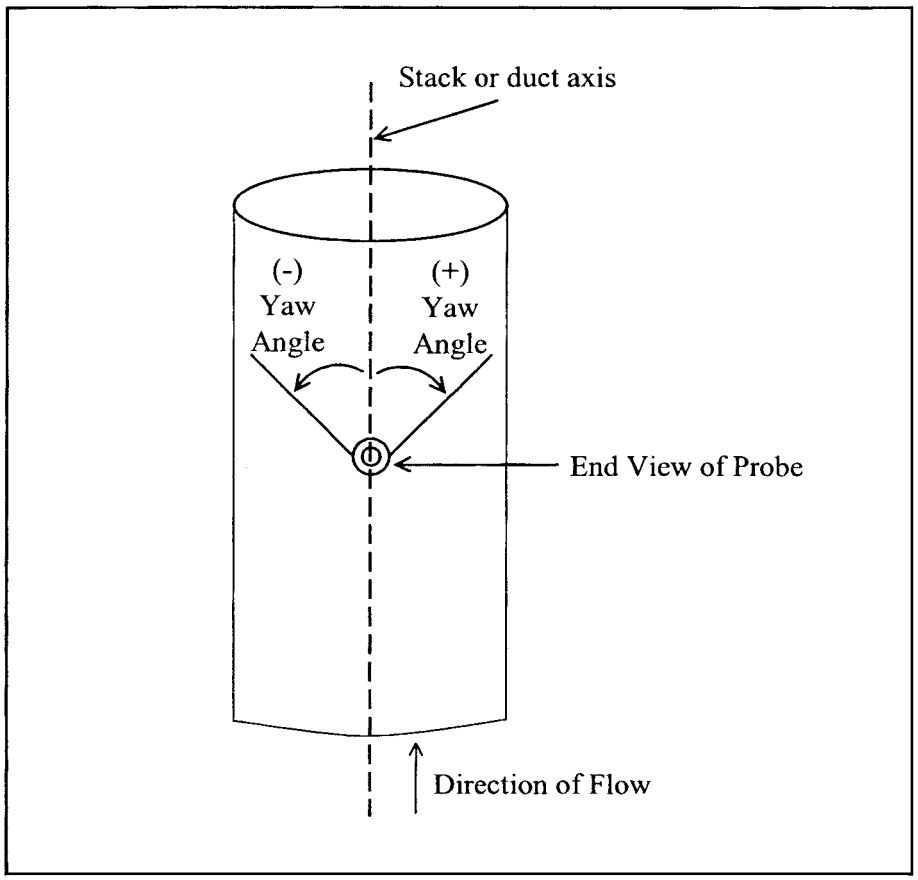

Figure 2F-2. Illustration of probe rotation representing positive and negative yaw angles.

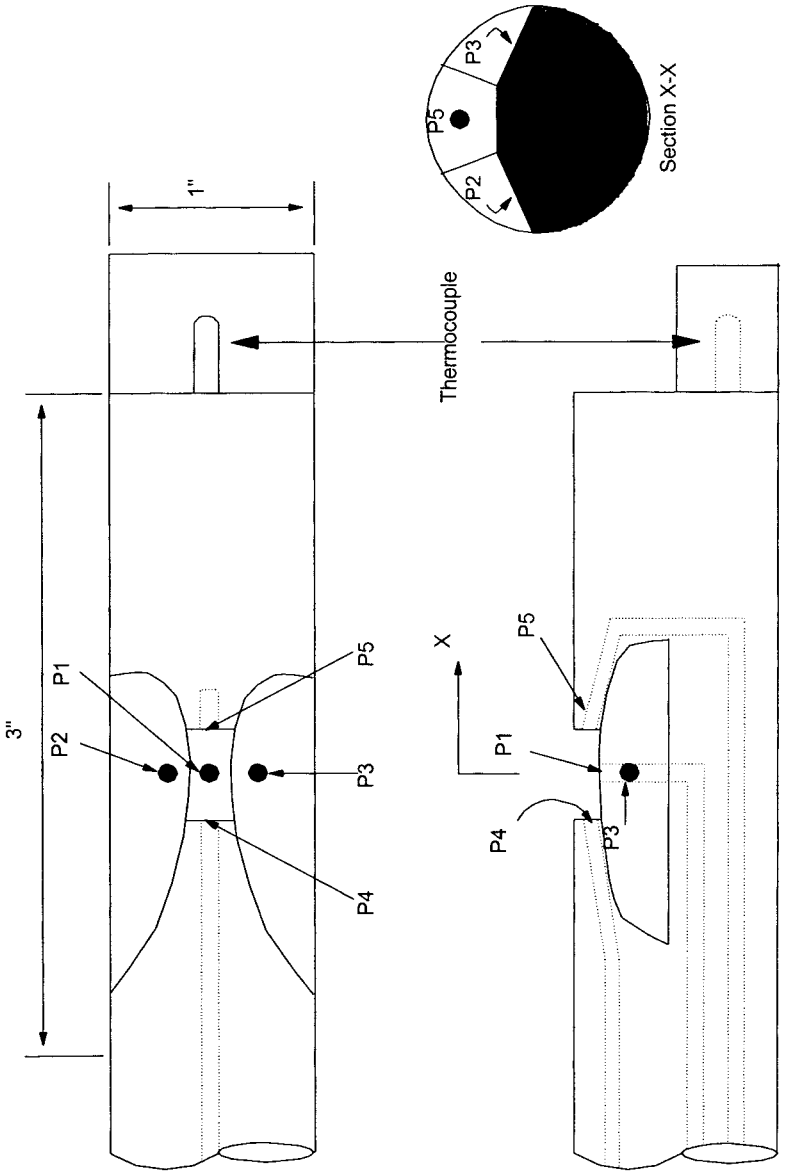

Figure 2F-3. Illustration of a five-hole prism-shaped (DAT) probe.

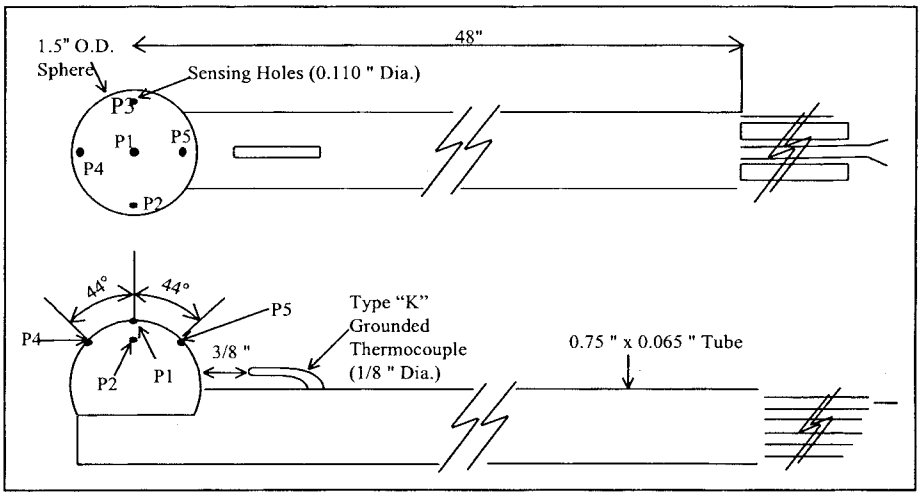

Figure 2F-4. Illustration of front and side view of spherical probe.

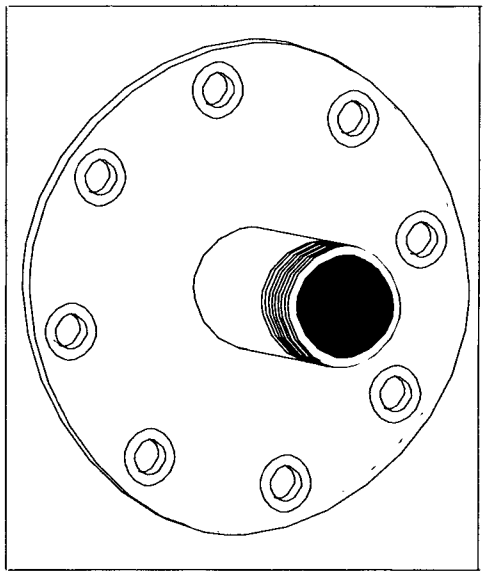

Figure 2F-5. Example bushing sleeve.

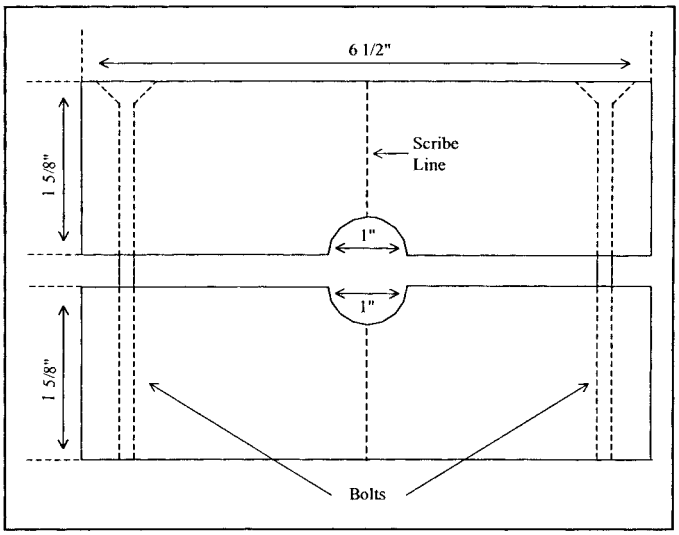

Figure 2F-6. Rotational position collar block.

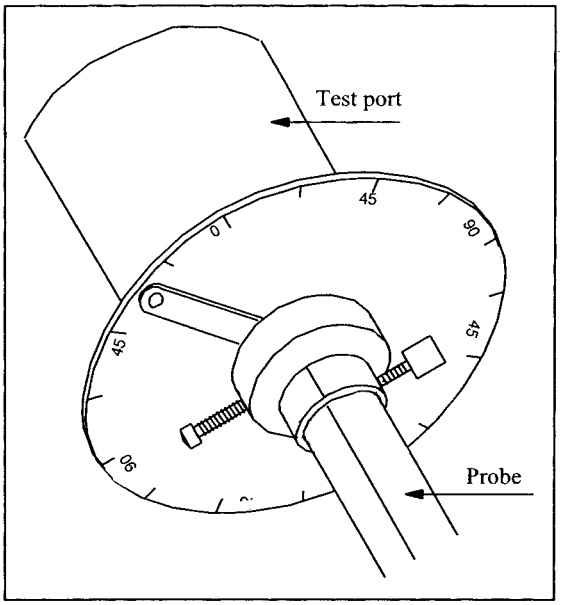

Figure 2F-7. Yaw angle protractor wheel and pointer.

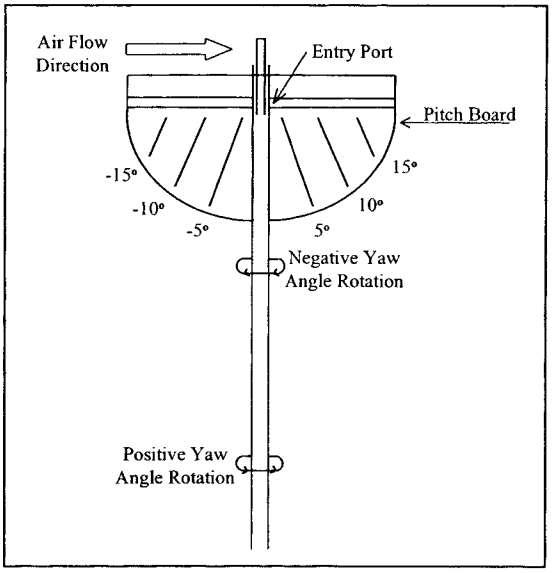

Figure 2F-8. Pitch angle protractor plate.

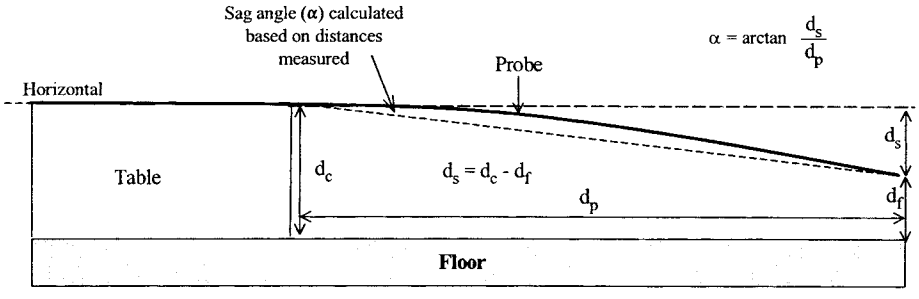

Figure 2F-9. Elements in horizontal straightness test using trigonometry.

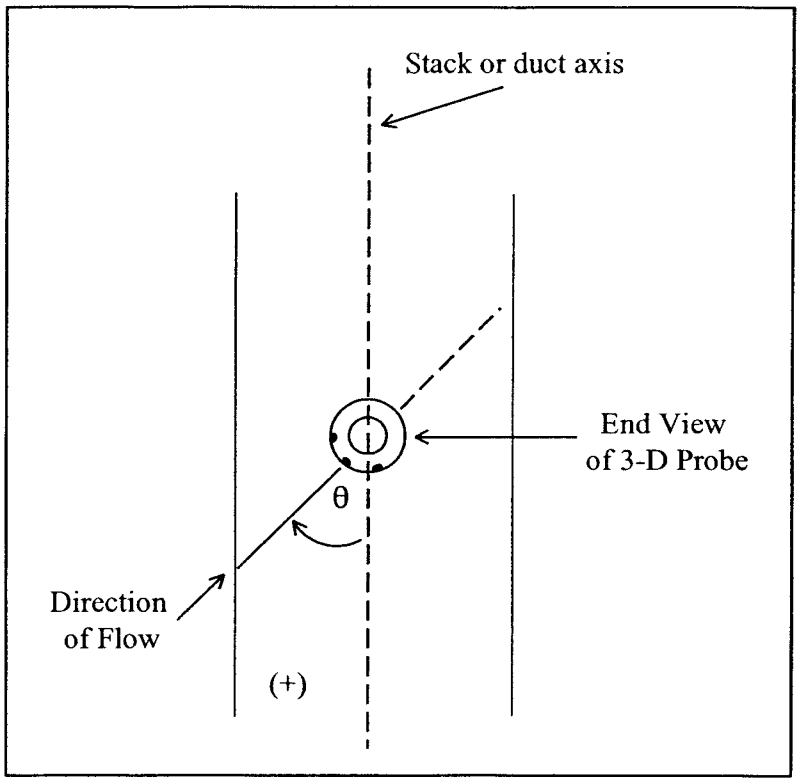

Figure 2F-10. Sign convention for the measured angle (θ) when the probe impact port is pointed directly into the flow. The angle θ is positive when the probe's impact pressure port is oriented in a clockwise rotational position relative to the stack or duct axis, as shown above and negative for a counterclockwise orientation.

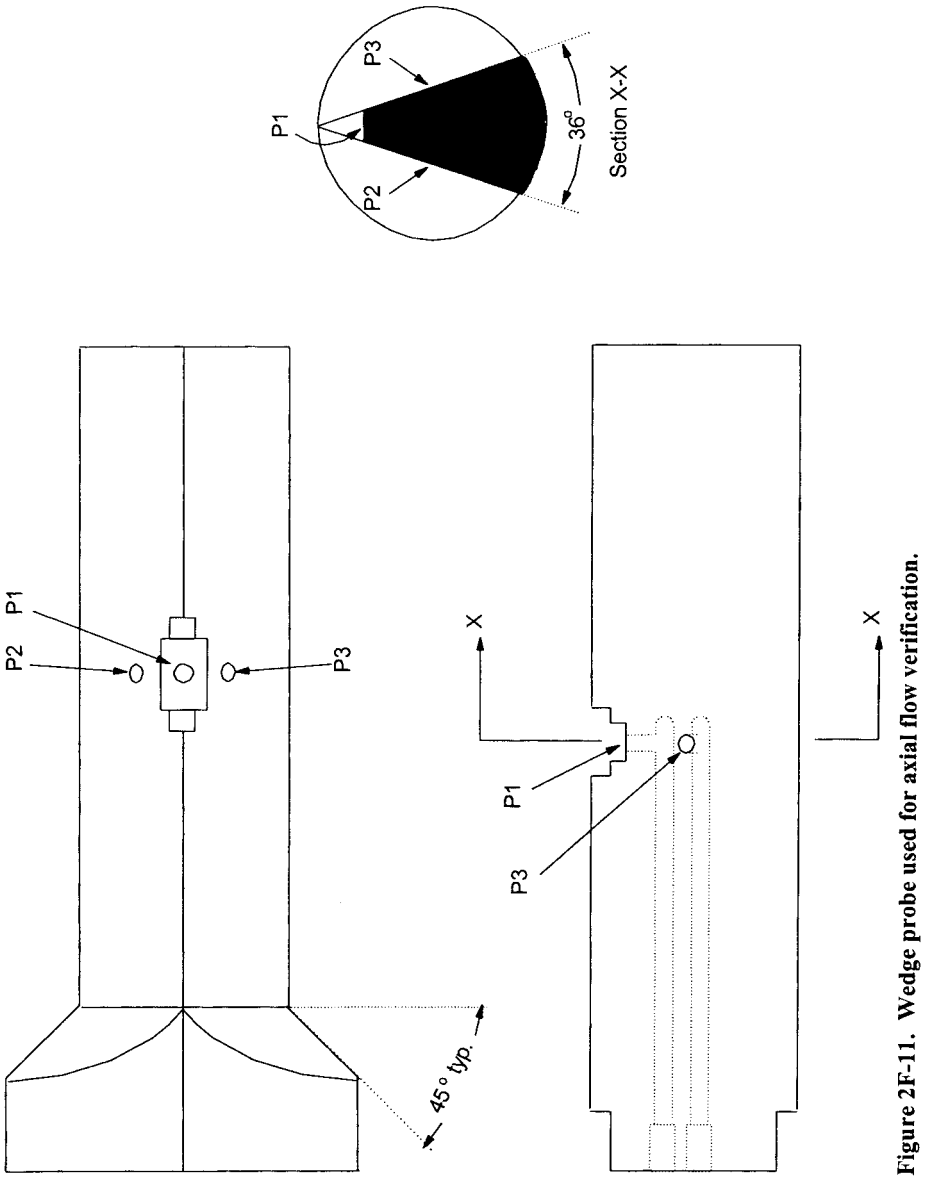

Figure 2F-11. Wedge probe used for axial flow verification.

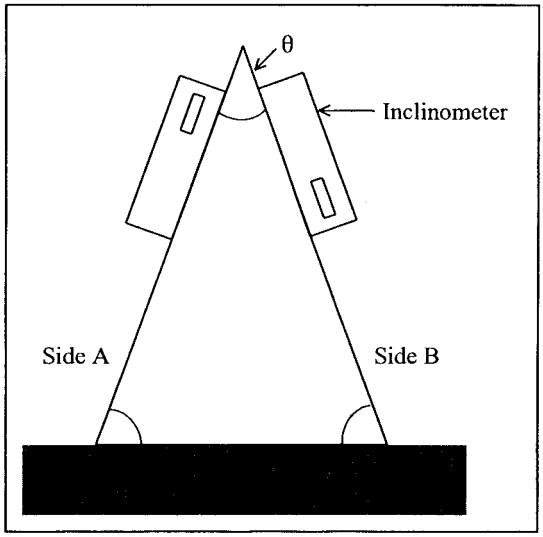

Figure 2F-12. Triangular block used for digital inclinometer calibration.

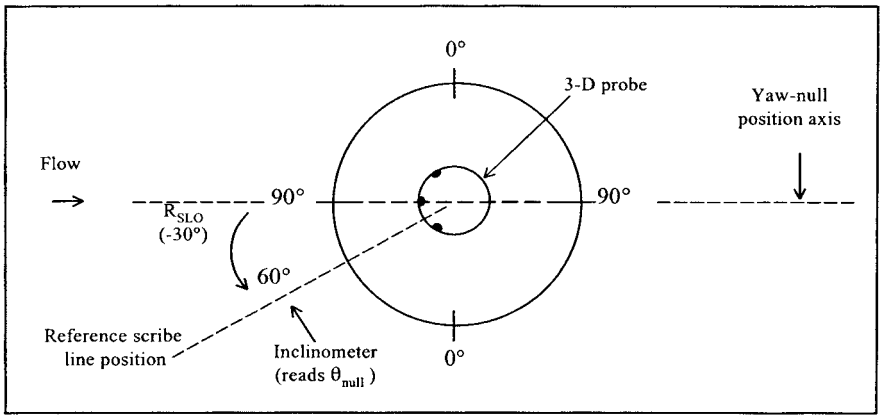

Figure 2F-13. Determination of reference scribe line rotational offset (R_{SLO}) in a horizontal wind tunnel with axial flow for a 3-D probe. The probe impact pressure port is aligned with the yaw-null position and is pointed into the flow. The inclinometer reads θ_{null}. The magnitude of $R_{SLO}=90°-\theta_{null}$ and the sign is a negative (counterclockwise from yaw-null position axis).

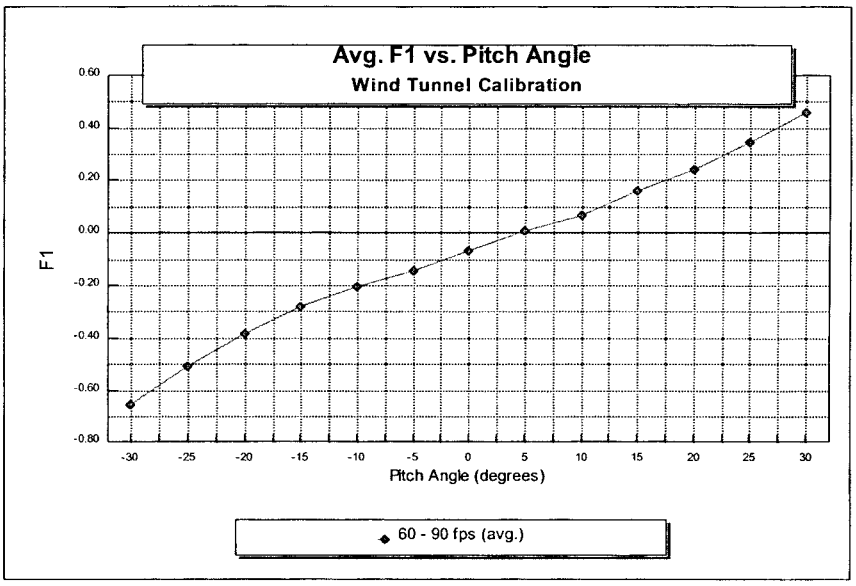

Figure 2F-14. Example F_1 calibration curve for the DAT probe.

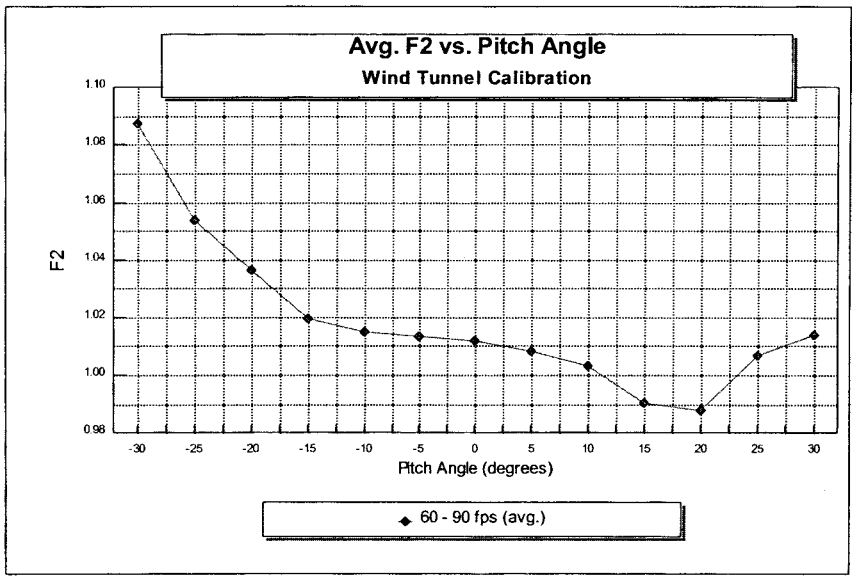

Figure 2F-15. Example F_2 calibration curve for the DAT probe.

Table 2F-1. 3-D Probe Inspection Sheet

Probe Type and ID # _____ **Date of most recent calibration**: _____
Fill in the tables below. For any item assigned a value of "1", show its location in the accompanying probe diagrams.

Inspection of Probe Ports

Port ID	Current Inspection (1=present, 0=absent)			Compared to Previous Calibration (1=changed, 0=unchanged)			Brief Description of Any Item with a Value of "1" in Preceding Columns
	Dents	Scratches	Asymmetries	Dents	Scratches	Asymmetries	
P1							
P2							
P3							
P4							
P5							

Inspection of Probe Surfaces

Surface ID	Current Inspection (1=present, 0=absent)		Compared to Previous Calibration (1=changed, 0=unchanged)		Brief Description of Any Item with a Value of "1" in Preceding Columns
	Scratches	Indentations	Scratches	Indentations	
S1					
S2					
S3					
S4					
S5					

Surface IDs S1 through S5 refer to the surfaces adjacent to pressure ports with the corresponding numbers, e.g., S3 refers to the surface adjacent to pressure port P3.

QA/QC Check
Completeness ___ Legibility ___ Accuracy ___ Specifications ___ Reasonableness ___

Certification
I certify that the Probe ID _____ meets or exceeds all specifications, criteria, and/or applicable design features required under Method 2F.

Certified by: _____ Date: _____

Table 2F-1. 3-D Probe Inspection Sheet (continued)

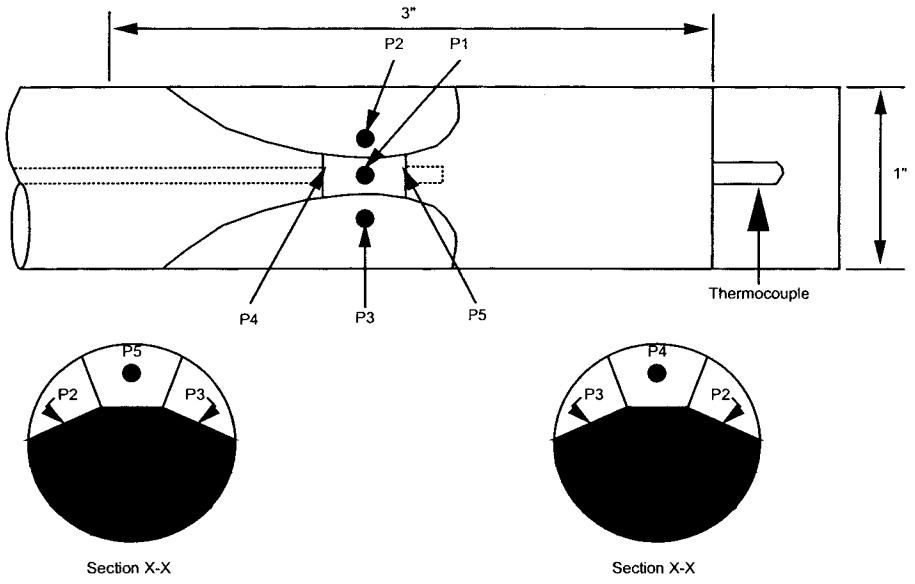

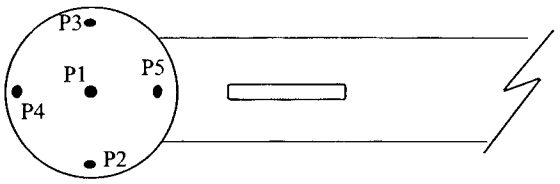

Table 2F-2. Rotational Position Check

Source: _____ Date: _____

Test Location: _____ Tester(s): _____

Probe Type: _____ Affiliation: _____

Probe ID: _____ Fully-Assembled Probe Length (in.): _____

Position	Angle Comparisons		
Distance of 2nd measurement device from probe head impact port in mm (in.)	1st Device Angle measured by device aligned on the reference scribe line, including algebraic sign (degrees)	2nd Device Angle measured by device mounted at each position to be used during testing, including algebraic sign (degrees)	R_{ADO} Difference between readings by 1st and 2nd angle-measuring devices (degrees)[a]
(Col. A)	(Col. B)	(Col. C)	(Col. C - Col. B)

[a] The algebraic sign must be consistent with section 8.3.2.

Specifications: For the pre-test rotational position check, the value of R_{ADO} at each location along the probe shaft must be determined to within ±1°. In the post-test check, R_{ADO} at each location must remain within ±2° of the value obtained in the pre-test check.

Table 2F-3. Example EPA Method 2F Field Data Form

Source: _____ Date: _____

Source Location: _____ Test Personnel: _____

Measurement Location: _____ Probe Type / ID: _____

Run ID:	
Start Time:	
End Time:	
Pressure Gauge ID:	
Pressure Gauge Readability:	in. H_2O
Temperature Gauge ID:	
Measurement Response Time:	sec.
R_{SLO}	
R_{ADO}	

Stack Diameter:	
Stack Area:	
Barometric Pressure (P_{bar}):	in. Hg
Static Pressure (P_g):	in. H_2O

	Pre-Test	Post-Test
Probe Head Condition: Damage Noted?		
Leak Check Performed?		

Clock Time	Traverse Point	Yaw Angle, including algebraic sign (degrees)	Velocity Differential Pressure (P_1-P_2)	Pitch Differential Pressure (P_4-P_5)	Stack or Duct Gas Temperature (°F)

Table 2F-4. Wind Tunnel Velocity Pressure Cross-Check

Wind Tunnel Facility: _____
Date: _____
Wind Tunnel Temperature: _____
Barometric Pressure: _____
Test Point Locations: _____
Lowest Test Velocity in m/sec (ft/sec): _____
Highest Test Velocity in m/sec (ft/sec): _____

Port		Rep.	Velocity Pressure (ΔP_{std})	
			@ Lowest Test Velocity	@ Highest Test Velocity
Calibration Pitot Tube Location		1		
		2		
		3		
		Average		
Calibration Location Test Points *	1	1		
		2		
		3		
		Average		
		% Difference **		
	2	1		
		2		
		3		
		Average		
		% Difference **		
		1		
		2		
		3		
		Average		
		% Difference **		

* Measurements must be taken at all points in the calibration location as specified in section 10.1.1

** Percent Difference = $\frac{(\textit{Calibration Location Test Point Avg} - \textit{Cal. Pitot Tube Location Avg})}{\textit{Cal. Pitot Tube Location Avg}} \times 100\%$

Specification: At each velocity setting, the average velocity pressure obtained at the calibration location shall be within ±2 percent or 0.01 in. H_2O, whichever is less restrictive, of the average velocity pressure obtained at the fixed calibration pitot tube location.

Table 2F-5. Wind Tunnel Axial Flow Verification

Wind Tunnel Facility: _____
Date: _____
Wind Tunnel Temperature: _____
Barometric Pressure: _____
Probe Type/I.D. Used To Conduct Check: _____
Test Point Locations: _____
Lowest Test Velocity in m/sec (ft/sec): _____
Highest Test Velocity in m/sec (ft/sec): _____

Port		@ Lowest Test Velocity		@ Highest Test Velocity	
		Yaw Angle * (degrees)	Pitch Angle * (degrees)	Yaw Angle * (degrees)	Pitch Angle * (degrees)
Calibration Location Test Points **	1				
	2				
	3				
	..				
Calibration Pitot Tube Location					

* When following the procedures in section 10.1.2.1, both the yaw and pitch angles are obtained from the same port. When following the procedures in section 10.1.2.2, the yaw angle is obtained using the port for the tested probe, and the pitch angle is obtained using the port for verification of axial flow.

** Yaw and pitch angle measurements must be taken at all points that define the calibration location (as per the requirements in section 10.1.1)

Specification: At each velocity setting, each measured yaw and pitch angle shall be within ±3° of 0° in accordance with the requirements in section 10.1.2.

Table 2F-6. Yaw Angle Calibration

Probe Type:_____ Tester(s):_____

Probe ID:_____ Affiliation:_____

Test Location:_____ Date:_____

	Repetition 1		Repetition 2	
Nominal Velocity Setting in m/sec (ft/sec)	θ_{null} (degrees)	R_{SLO} (degrees)*	θ_{null} (degrees)	R_{SLO} (degrees)*

Average of all recorded R_{SLO} values: _____

* Include magnitude and algebraic sign in accordance with section 10.5.7.

Table 2F-7. Determining the Magnitude of Reference Scribe Line Offset

Probe/Angle-Measuring Device	Magnitude of R_{SLO}
3-D probe with inclinometer	$90° - \theta_{null}$
3-D probe with protractor wheel and pointer	θ_{null}

Table 2F-8. Wind Tunnel Calibration of Three-Dimensional Probe

Wind Tunnel Facility: _____

Wind Tunnel Location: _____

Probe Type: _____

Probe ID: _____

Probe Calibration Date: _____

Test Location: _____

Calibration Pitot Tube Coeff. (C_p):_____

Ambient Temperature (° F): _____

Barometric Pressure (P_{bar}): _____

Velocity Setting (ft/sec)	Pitch Angle	Calibration Pitot Tube		Tested Probe			Calc. F_1	Calc. F_2
		ΔP_{std} (in. H_2O)*	Temp. (°F)	P_1-P_2 (in. H_2O)	P_4-P_5 (in. H_2O)	Yaw Angle (degrees)		
	-30°							
	-25°							
	-20°							
	-15°							
	-10°							
	-5°							
	0°							
	5°							
	10°							
	15°							
	20°							
	25°							
	30°							

* Calibration pitot tube measurements must, at a minimum, be taken before the tested probe reading at the first pitch angle setting, and after the tested probe reading at the last pitch angle setting in each replicate. See section 10.6.11.

Table 2F-9. Calibration Log for Three-Dimensional Probe

Probe ID: _____

Probe Type: _____

Probe Calibration Date:_____

Test Location: _____

Nominal Velocity: _____

Pitch Angle	Average of All Repetitions		Number of Repetitions
	F_1	F_2	
-35°			
-30°			
-25°			
-20°			
-15°			
-10°			
-5°			
0°			
5°			
10°			
15°			
20°			
25°			
30°			
35°			

METHOD 2G—DETERMINATION OF STACK GAS VELOCITY AND VOLUMETRIC FLOW RATE WITH TWO-DIMENSIONAL PROBES

NOTE: This method does not include all of the specifications (e.g., equipment and supplies) and procedures (e.g., sampling) essential to its performance. Some material has been incorporated from other methods in this part. Therefore, to obtain reliable results, those using this method should have a thorough knowledge of at least the following additional test methods: Methods 1, 2, 3 or 3A, and 4.

1.0 Scope and Application

1.1 This method is applicable for the determination of yaw angle, near-axial velocity, and the volumetric flow rate of a gas stream in a stack or duct using a two-dimensional (2–D) probe.

2.0 Summary of Method

2.1 A 2–D probe is used to measure the velocity pressure and the yaw angle of the flow velocity vector in a stack or duct. Alternatively, these measurements may be made by operating one of the three-dimensional (3–D) probes described in Method 2F, in yaw determination mode only. From these measurements and a determination of the stack gas density, the average near-axial velocity of the stack gas is calculated. The near-axial velocity accounts for the yaw, but not the pitch, component of flow. The average gas volumetric flow rate in the stack or duct is then determined from the average near-axial velocity.

3.0 Definitions

3.1. *Angle-measuring Device Rotational Offset (R_{ADO}).* The rotational position of an angle-measuring device relative to the reference scribe line, as determined during the pre-test rotational position check described in section 8.3.

3.2 *Calibration Pitot Tube.* The standard (Prandtl type) pitot tube used as a reference when calibrating a probe under this method.

3.3 *Field Test.* A set of measurements conducted at a specific unit or exhaust stack/duct to satisfy the applicable regulation (e.g., a three-run boiler performance test, a single-or multiple-load nine-run relative accuracy test).

3.4 *Full Scale of Pressure-measuring Device.* Full scale refers to the upper limit of the measurement range displayed by the device. For bi-directional pressure gauges, full scale includes the entire pressure range from the lowest negative value to the highest positive value on the pressure scale.

3.5 *Main probe.* Refers to the probe head and that section of probe sheath directly attached to the probe head. The main probe sheath is distinguished from probe extensions, which are sections of sheath added onto the main probe to extend its reach.

3.6 *''May,'' ''Must,'' ''Shall,'' ''Should,''* and the imperative form of verbs.

3.6.1 *''May''* is used to indicate that a provision of this method is optional.

3.6.2 *''Must,'' ''Shall,''* and the imperative form of verbs (such as ''record'' or ''enter'') are used to indicate that a provision of this method is mandatory.

3.6.3 *''Should''* is used to indicate that a provision of this method is not mandatory, but is highly recommended as good practice.

3.7 *Method 1.* Refers to 40 CFR part 60, appendix A, ''Method 1—Sample and velocity traverses for stationary sources.''

3.8 *Method 2.* Refers to 40 CFR part 60, appendix A, ''Method 2—Determination of stack gas velocity and volumetric flow rate (Type S pitot tube).''

3.9 *Method 2F.* Refers to 40 CFR part 60, appendix A, ''Method 2F—Determination of stack gas velocity and volumetric flow rate with three-dimensional probes.''

3.10 *Near-axial Velocity.* The velocity vector parallel to the axis of the stack or duct that accounts for the yaw angle component of gas flow. The term ''near-axial'' is used herein to indicate that the velocity and volumetric flow rate results account for the measured yaw angle component of flow at each measurement point.

3.11 *Nominal Velocity.* Refers to a wind tunnel velocity setting that approximates the actual wind tunnel velocity to within ±1.5 m/sec (±5 ft/sec).

3.12 *Pitch Angle.* The angle between the axis of the stack or duct and the pitch component of flow, i.e., the component of the total velocity vector in a plane defined by the traverse line and the axis of the stack or duct. (Figure 2G–1 illustrates the ''pitch plane.'') From the standpoint of a tester facing a test port in a vertical stack, the pitch component of flow is the vector of flow moving from the center of the stack toward or away from that test port. The pitch angle is the angle described by this pitch component of flow and the vertical axis of the stack.

3.13 *Readability.* For the purposes of this method, readability for an analog measurement device is one half of the smallest scale division. For a digital measurement device, it is the number of decimals displayed by the device.

3.14 *Reference Scribe Line.* A line permanently inscribed on the main probe sheath (in accordance with section 6.1.5.1) to serve as a reference mark for determining yaw angles.

3.15 *Reference Scribe Line Rotational Offset (R_{SLO}).* The rotational position of a probe's reference scribe line relative to the probe's yaw-null position, as determined during the yaw angle calibration described in section 10.5.

3.16 *Response Time.* The time required for the measurement system to fully respond to a change from zero differential pressure and ambient temperature to the stable stack or duct pressure and temperature readings at a traverse point.

3.17 *Tested Probe.* A probe that is being calibrated.

3.18 *Three-dimensional (3–D) Probe.* A directional probe used to determine the velocity pressure and the yaw and pitch angles in a flowing gas stream.

3.19 *Two-dimensional (2–D) Probe.* A directional probe used to measure velocity pressure and yaw angle in a flowing gas stream.

3.20 *Traverse Line.* A diameter or axis extending across a stack or duct on which measurements of velocity pressure and flow angles are made.

3.21 *Wind Tunnel Calibration Location.* A point, line, area, or volume within the wind tunnel test section at, along, or within which probes are calibrated. At a particular wind tunnel velocity setting, the average velocity pressures at specified points at, along, or within the calibration location shall vary by no more than 2 percent or 0.3 mm H_20 (0.01 in. H_2O), whichever is less restrictive, from the average velocity pressure at the calibration pitot tube location. Air flow at this location shall be axial, i.e., yaw and pitch angles within ±3° of 0°. Compliance with these flow criteria shall be demonstrated by performing the procedures prescribed in sections 10.1.1 and 10.1.2. For circular tunnels, no part of the calibration location may be closer to the tunnel wall than 10.2 cm (4 in.) or 25 percent of the tunnel diameter, whichever is farther from the wall. For elliptical or rectangular tunnels, no part of the calibration location may be closer to the tunnel wall than 10.2 cm (4 in.) or 25 percent of the applicable cross-sectional axis, whichever is farther from the wall.

3.22 *Wind Tunnel with Documented Axial Flow.* A wind tunnel facility documented as meeting the provisions of sections 10.1.1 (velocity pressure cross-check) and 10.1.2 (axial flow verification) using the procedures described in these sections or alternative procedures determined to be technically equivalent.

3.23 *Yaw Angle.* The angle between the axis of the stack or duct and the yaw component of flow, i.e., the component of the total velocity vector in a plane perpendicular to the traverse line at a particular traverse point. (Figure 2G–1 illustrates the ''yaw plane.'') From the standpoint of a tester facing a test port in a vertical stack, the yaw component of flow is the vector of flow moving to the left or right from the center of the stack as viewed by the tester. (This is sometimes referred to as ''vortex flow,'' i.e., flow around the centerline of a stack or duct.) The yaw angle is the angle described by this yaw component of flow and the vertical axis of the stack. The algebraic sign convention is illustrated in Figure 2G–2.

3.24 *Yaw Nulling.* A procedure in which a Type-S pitot tube or a 3–D probe is rotated about its axis in a stack or duct until a zero differential pressure reading (''yaw null'') is obtained. When a Type S probe is yaw-nulled, the rotational position of its impact port is 90° from the direction of flow in the stack or duct and the Δ P reading is zero. When a 3–D probe is yaw-nulled, its impact pressure port (P_1) faces directly into the direction of flow in the stack or duct and the differential pressure between pressure ports P_2 and P_3 is zero.

4.0 Interferences. [Reserved]

5.0 Safety

5.1 This test method may involve hazardous operations and the use of hazardous materials or equipment. This method does not purport to address all of the safety problems associated with its use. It is the responsibility of the user to establish and implement appropriate safety and health practices and to determine the applicability of regulatory limitations before using this test method.

6.0 Equipment and Supplies

6.1 Two-dimensional Probes. Probes that provide both the velocity pressure and the yaw angle of the flow vector in a stack or duct, as listed in sections 6.1.1 and 6.1.2, qualify for use based on comprehensive wind tunnel and field studies involving both inter-and intra-probe comparisons by multiple test teams. Each 2–D probe shall have a unique identification number or code permanently marked on the main probe sheath. Each probe shall be calibrated prior to use according to the procedures in section 10. Manufacturer-supplied calibration data shall be used as example information only, except when the manufacturer calibrates the probe as specified in section 10 and provides complete documentation.

6.1.1 Type S (Stausscheibe or reverse type) pitot tube. This is the same as specified in Method 2, section 2.1, except for the following additional specifications that enable the pitot tube to accurately determine the yaw component of flow. For the purposes of this method, the external diameter of the tubing used to construct the Type S pitot tube (dimension D_t in Figure 2–2 of Method 2) shall be no less than 9.5 mm (3/8 in.). The pitot tube shall also meet the following alignment specifications. The angles α_1, α_2, β_1, and β_2, as shown in Method 2, Figure 2–3, shall not exceed ±2°. The dimensions *w* and *z*, shown in Method 2, Figure 2–3 shall not exceed 0.5 mm (0.02 in.).

6.1.1.1 Manual Type S probe. This refers to a Type S probe that is positioned at individual traverse points and yaw nulled manually by an operator.

6.1.1.2 Automated Type S probe. This refers to a system that uses a computer-controlled motorized mechanism to position the Type S pitot head at individual traverse points and perform yaw angle determinations.

6.1.2 Three-dimensional probes used in 2–D mode. A 3–D probe, as specified in sections 6.1.1 through 6.1.3 of Method 2F, may, for the purposes of this method, be used in a two-dimensional mode (i.e., measuring yaw angle, but not pitch angle). When the 3–D probe is used as a 2–D probe, only the velocity pressure and yaw-null pressure are obtained using the pressure taps referred to as P_1, P_2, and P_3. The differential pressure $P_1–P_2$ is a function of total velocity and corresponds to the ΔP obtained using the Type S probe. The differential pressure $P_2–P_3$ is used to yaw null the probe and determine the yaw angle. The differential pressure $P_4–P_5$, which is a function of pitch angle, is not measured when the 3–D probe is used in 2–D mode.

6.1.3 Other probes. [Reserved]

6.1.4 Probe sheath. The probe shaft shall include an outer sheath to: (1) provide a surface for inscribing a permanent reference scribe line, (2) accommodate attachment of an angle-measuring device to the probe shaft, and (3) facilitate precise rotational movement of the probe for determining yaw angles. The sheath shall be rigidly attached to the probe assembly and shall enclose all pressure lines from the probe head to the farthest position away from the probe head where an angle-measuring device may be attached during use in the field. The sheath of the fully assembled probe shall be sufficiently rigid and straight at all rotational positions such that, when one end of the probe shaft is held in a horizontal position, the fully extended probe meets the horizontal straightness specifications indicated in section 8.2 below.

6.1.5 Scribe lines.

6.1.5.1 Reference scribe line. A permanent line, no greater than 1.6 mm (1/16 in.) in width, shall be inscribed on each manual probe that will be used to determine yaw angles of flow. This line shall be placed on the main probe sheath in accordance with the procedures described in section 10.4 and is used as a reference position for installation of the yaw angle-measuring device on the probe. At the discretion of the tester, the scribe line may be a single line segment placed at a particular position on the probe sheath (e.g., near the probe head), multiple line segments placed at various locations along the length of the probe sheath (e.g., at every position where a yaw angle-measuring device may be mounted), or a single continuous line extending along the full length of the probe sheath.

6.1.5.2 Scribe line on probe extensions. A permanent line may also be inscribed on any probe extension that will be attached to the main probe in performing field testing. This allows a yaw angle-measuring device mounted on the extension to be readily aligned with the reference scribe line on the main probe sheath.

6.1.5.3 Alignment specifications. This specification shall be met separately, using the procedures in section 10.4.1, on the main probe and on each probe extension. The rotational position of the scribe line or scribe line segments on the main probe or any probe extension must not vary by more than 2°. That is, the difference between the minimum and maximum of all of the rotational angles that are measured along the full length of the main probe or the probe extension must not exceed 2°.

6.1.6 Probe and system characteristics to ensure horizontal stability.

6.1.6.1 For manual probes, it is recommended that the effective length of the probe (coupled with a probe extension, if necessary) be at least 0.9 m (3 ft.) longer than the farthest traverse point mark on the probe shaft away from the probe head. The operator should maintain the probe's horizontal stability when it is fully inserted into the stack or duct. If a shorter probe is used, the probe should be inserted through a bushing sleeve, similar to the one shown in Figure 2G–3, that is installed on the test port; such a bushing shall fit snugly around the probe and be secured to the stack or duct entry port in such a manner as to maintain the probe's horizontal stability when fully inserted into the stack or duct.

6.1.6.2 An automated system that includes an external probe casing with a transport system shall have a mechanism for maintaining horizontal stability comparable to that obtained by manual probes following the provisions of this method. The automated probe assembly shall also be constructed to maintain the alignment and position of the pressure ports during sampling at each traverse point. The design of the probe casing and transport system shall allow the probe to be removed from the stack or duct and checked through direct physical measurement for angular position and insertion depth.

6.1.7 The tubing that is used to connect the probe and the pressure-measuring device should have an inside diameter of at least 3.2 mm (⅛ in.), to reduce the time required for pressure equilibration, and should be as short as practicable.

6.1.8 If a detachable probe head without a sheath [e.g., a pitot tube, typically 15.2 to 30.5 cm (6 to 12 in.) in length] is coupled with

a probe sheath and calibrated in a wind tunnel in accordance with the yaw angle calibration procedure in section 10.5, the probe head shall remain attached to the probe sheath during field testing in the same configuration and orientation as calibrated. Once the detachable probe head is uncoupled or re-oriented, the yaw angle calibration of the probe is no longer valid and must be repeated before using the probe in subsequent field tests.

6.2 Yaw Angle-measuring Device. One of the following devices shall be used for measurement of the yaw angle of flow.

6.2.1 Digital inclinometer. This refers to a digital device capable of measuring and displaying the rotational position of the probe to within ±1°. The device shall be able to be locked into position on the probe sheath or probe extension, so that it indicates the probe's rotational position throughout the test. A rotational position collar block that can be attached to the probe sheath (similar to the collar shown in Figure 2G–4) may be required to lock the digital inclinometer into position on the probe sheath.

6.2.2 Protractor wheel and pointer assembly. This apparatus, similar to that shown in Figure 2G–5, consists of the following components.

6.2.2.1 A protractor wheel that can be attached to a port opening and set in a fixed rotational position to indicate the yaw angle position of the probe's scribe line relative to the longitudinal axis of the stack or duct. The protractor wheel must have a measurement ring on its face that is no less than 17.8 cm (7 in.) in diameter, shall be able to be rotated to any angle and then locked into position on the stack or duct test port, and shall indicate angles to a resolution of 1°.

6.2.2.2 A pointer assembly that includes an indicator needle mounted on a collar that can slide over the probe sheath and be locked into a fixed rotational position on the probe sheath. The pointer needle shall be of sufficient length, rigidity, and sharpness to allow the tester to determine the probe's angular position to within 1° from the markings on the protractor wheel. Corresponding to the position of the pointer, the collar must have a scribe line to be used in aligning the pointer with the scribe line on the probe sheath.

6.2.3 Other yaw angle-measuring devices. Other angle-measuring devices with a manufacturer's specified precision of 1° or better may be used, if approved by the Administrator.

6.3 Probe Supports and Stabilization Devices. When probes are used for determining flow angles, the probe head should be kept in a stable horizontal position. For probes longer than 3.0 m (10 ft.), the section of the probe that extends outside the test port shall be secured. Three alternative devices are suggested for maintaining the horizontal position and stability of the probe shaft during flow angle determinations and velocity pressure measurements: (1) monorails installed above each port, (2) probe stands on which the probe shaft may be rested, or (3) bushing sleeves of sufficient length secured to the test ports to maintain probes in a horizontal position. Comparable provisions shall be made to ensure that automated systems maintain the horizontal position of the probe in the stack or duct. The physical characteristics of each test platform may dictate the most suitable type of stabilization device. Thus, the choice of a specific stabilization device is left to the judgement of the testers.

6.4 Differential Pressure Gauges. The velocity pressure (ΔP) measuring devices used during wind tunnel calibrations and field testing shall be either electronic manometers (e.g., pressure transducers), fluid manometers, or mechanical pressure gauges (e.g., MagnehelicΔ gauges). Use of electronic manometers is recommended. Under low velocity conditions, use of electronic manometers may be necessary to obtain acceptable measurements.

6.4.1 Differential pressure-measuring device. This refers to a device capable of measuring pressure differentials and having a readability of ±1 percent of full scale. The device shall be capable of accurately measuring the maximum expected pressure differential. Such devices are used to determine the following pressure measurements: velocity pressure, static pressure, and yaw-null pressure. For an inclined-vertical manometer, the readability specification of ±1 percent shall be met separately using the respective full-scale upper limits of the inclined anvertical portions of the scales. To the extent practicable, the device shall be selected such that most of the pressure readings are between 10 and 90 percent of the device's full-scale measurement range (as defined in section 3.4). In addition, pressure-measuring devices should be selected such that the zero does not drift by more than 5 percent of the average expected pressure readings to be encountered during the field test. This is particularly important under low pressure conditions.

6.4.2 Gauge used for yaw nulling. The differential pressure-measuring device chosen for yaw nulling the probe during the wind tunnel calibrations and field testing shall be bi-directional, i.e., capable of reading both positive and negative differential pressures. If a mechanical, bi-directional pressure gauge is chosen, it shall have a full-scale range no greater than 2.6 cm (i.e., −1.3 to +1.3 cm) [1 in. H_2O (i.e., −0.5 in. to +0.5 in.)].

6.4.3 Devices for calibrating differential pressure-measuring devices. A precision manometer (e.g., a U-tube, inclined, or inclined-vertical manometer, or micromanometer) or NIST (National Institute of Standards and Technology) traceable pressure source shall be used for calibrating differential pressure-

measuring devices. The device shall be maintained under laboratory conditions or in a similar protected environment (e.g., a climate-controlled trailer). It shall not be used in field tests. The precision manometer shall have a scale gradation of 0.3 mm H_2O (0.01 in. H_2O), or less, in the range of 0 to 5.1 cm H_2O (0 to 2 in. H_2O) and 2.5 mm H_2O (0.1 in. H_2O), or less, in the range of 5.1 to 25.4 cm H_2O (2 to 10 in. H_2O). The manometer shall have manufacturer's documentation that it meets an accuracy specification of at least 0.5 percent of full scale. The NIST-traceable pressure source shall be recertified annually.

6.4.4 Devices used for post-test calibration check. A precision manometer meeting the specifications in section 6.4.3, a pressure-measuring device or pressure source with a documented calibration traceable to NIST, or an equivalent device approved by the Administrator shall be used for the post-test calibration check. The pressure-measuring device shall have a readability equivalent to or greater than the tested device. The pressure source shall be capable of generating pressures between 50 and 90 percent of the range of the tested device and known to within ±1 percent of the full scale of the tested device. The pressure source shall be recertified annually.

6.5 Data Display and Capture Devices. Electronic manometers (if used) shall be coupled with a data display device (such as a digital panel meter, personal computer display, or strip chart) that allows the tester to observe and validate the pressure measurements taken during testing. They shall also be connected to a data recorder (such as a data logger or a personal computer with data capture software) that has the ability to compute and retain the appropriate average value at each traverse point, identified by collection time and traverse point.

6.6 Temperature Gauges. For field tests, a thermocouple or resistance temperature detector (RTD) capable of measuring temperature to within ±3°C (±5°F) of the stack or duct temperature shall be used. The thermocouple shall be attached to the probe such that the sensor tip does not touch any metal. The position of the thermocouple relative to the pressure port face openings shall be in the same configuration as used for the probe calibrations in the wind tunnel. Temperature gauges used for wind tunnel calibrations shall be capable of measuring temperature to within ±0.6°C (±1°F) of the temperature of the flowing gas stream in the wind tunnel.

6.7 Stack or Duct Static Pressure Measurement. The pressure-measuring device used with the probe shall be as specified in section 6.4 of this method. The static tap of a standard (Prandtl type) pitot tube or one leg of a Type S pitot tube with the face opening planes positioned parallel to the gas flow may be used for this measurement. Also acceptable is the pressure differential reading of P_1-P_{bar} from a five-hole prism-shaped 3–D probe, as specified in section 6.1.1 of Method 2F (such as the Type DA or DAT probe), with the P_1 pressure port face opening positioned parallel to the gas flow in the same manner as the Type S probe. However, the 3–D spherical probe, as specified in section 6.1.2 of Method 2F, is unable to provide this measurement and shall not be used to take static pressure measurements. Static pressure measurement is further described in section 8.11.

6.8 Barometer. Same as Method 2, section 2.5.

6.9 Gas Density Determination Equipment. Method 3 or 3A shall be used to determine the dry molecular weight of the stack or duct gas. Method 4 shall be used for moisture content determination and computation of stack or duct gas wet molecular weight. Other methods may be used, if approved by the Administrator.

6.10 Calibration Pitot Tube. Same as Method 2, section 2.7.

6.11 Wind Tunnel for Probe Calibration. Wind tunnels used to calibrate velocity probes must meet the following design specifications.

6.11.1 Test section cross-sectional area. The flowing gas stream shall be confined within a circular, rectangular, or elliptical duct. The cross-sectional area of the tunnel must be large enough to ensure fully developed flow in the presence of both the calibration pitot tube and the tested probe. The calibration site, or ''test section,'' of the wind tunnel shall have a minimum diameter of 30.5 cm (12 in.) for circular or elliptical duct cross-sections or a minimum width of 30.5 cm (12 in.) on the shorter side for rectangular cross-sections. Wind tunnels shall meet the probe blockage provisions of this section and the qualification requirements prescribed in section 10.1. The projected area of the portion of the probe head, shaft, and attached devices inside the wind tunnel during calibration shall represent no more than 4 percent of the cross-sectional area of the tunnel. The projected area shall include the combined area of the calibration pitot tube and the tested probe if both probes are placed simultaneously in the same cross-sectional plane in the wind tunnel, or the larger projected area of the two probes if they are placed alternately in the wind tunnel.

6.11.2 Velocity range and stability. The wind tunnel should be capable of maintaining velocities between 6.1 m/sec and 30.5 m/sec (20 ft/sec and 100 ft/sec). The wind tunnel shall produce fully developed flow patterns that are stable and parallel to the axis of the duct in the test section.

6.11.3 Flow profile at the calibration location. The wind tunnel shall provide axial flow within the test section calibration location (as defined in section 3.21). Yaw and pitch angles in the calibration location shall

be within ±3° of 0°. The procedure for determining that this requirement has been met is described in section 10.1.2.

6.11.4 Entry ports in the wind tunnel test section.

6.11.4.1 Port for tested probe. A port shall be constructed for the tested probe. This port shall be located to allow the head of the tested probe to be positioned within the wind tunnel calibration location (as defined in section 3.21). The tested probe shall be able to be locked into the 0° pitch angle position. To facilitate alignment of the probe during calibration, the test section should include a window constructed of a transparent material to allow the tested probe to be viewed.

6.11.4.2 Port for verification of axial flow. Depending on the equipment selected to conduct the axial flow verification prescribed in section 10.1.2, a second port, located 90° from the entry port for the tested probe, may be needed to allow verification that the gas flow is parallel to the central axis of the test section. This port should be located and constructed so as to allow one of the probes described in section 10.1.2.2 to access the same test point(s) that are accessible from the port described in section 6.11.4.1.

6.11.4.3 Port for calibration pitot tube. The calibration pitot tube shall be used in the port for the tested probe or in a separate entry port. In either case, all measurements with the calibration pitot tube shall be made at the same point within the wind tunnel over the course of a probe calibration. The measurement point for the calibration pitot tube shall meet the same specifications for distance from the wall and for axial flow as described in section 3.21 for the wind tunnel calibration location.

7.0 Reagents and Standards. [Reserved]

8.0 Sample Collection and Analysis

8.1 Equipment Inspection and Set Up

8.1.1 All 2–D and 3–D probes, differential pressure-measuring devices, yaw angle-measuring devices, thermocouples, and barometers shall have a current, valid calibration before being used in a field test. (See sections 10.3.3, 10.3.4, and 10.5 through 10.10 for the applicable calibration requirements.)

8.1.2 Before each field use of a Type S probe, perform a visual inspection to verify the physical condition of the pitot tube. Record the results of the inspection. If the face openings are noticeably misaligned or there is visible damage to the face openings, the probe shall not be used until repaired, the dimensional specifications verified (according to the procedures in section 10.2.1), and the probe recalibrated.

8.1.3 Before each field use of a 3–D probe, perform a visual inspection to verify the physical condition of the probe head according to the procedures in section 10.2 of Method 2F. Record the inspection results on a form similar to Table 2F–1 presented in Method 2F. If there is visible damage to the 3–D probe, the probe shall not be used until it is recalibrated.

8.1.4 After verifying that the physical condition of the probe head is acceptable, set up the apparatus using lengths of flexible tubing that are as short as practicable. Surge tanks installed between the probe and pressure-measuring device may be used to dampen pressure fluctuations provided that an adequate measurement system response time (see section 8.8) is maintained.

8.2 Horizontal Straightness Check. A horizontal straightness check shall be performed before the start of each field test, except as otherwise specified in this section. Secure the fully assembled probe (including the probe head and all probe shaft extensions) in a horizontal position using a stationary support at a point along the probe shaft approximating the location of the stack or duct entry port when the probe is sampling at the farthest traverse point from the stack or duct wall. The probe shall be rotated to detect bends. Use an angle-measuring device or trigonometry to determine the bend or sag between the probe head and the secured end. (See Figure 2G–6.) Probes that are bent or sag by more than 5° shall not be used. Although this check does not apply when the probe is used for a vertical traverse, care should be taken to avoid the use of bent probes when conducting vertical traverses. If the probe is constructed of a rigid steel material and consists of a main probe without probe extensions, this check need only be performed before the initial field use of the probe, when the probe is recalibrated, when a change is made to the design or material of the probe assembly, and when the probe becomes bent. With such probes, a visual inspection shall be made of the fully assembled probe before each field test to determine if a bend is visible. The probe shall be rotated to detect bends. The inspection results shall be documented in the field test report. If a bend in the probe is visible, the horizontal straightness check shall be performed before the probe is used.

8.3 Rotational Position Check. Before each field test, and each time an extension is added to the probe during a field test, a rotational position check shall be performed on all manually operated probes (except as noted in section 8.3.5 below) to ensure that, throughout testing, the angle-measuring device is either: aligned to within ±1° of the rotational position of the reference scribe line; or is affixed to the probe such that the rotational offset of the device from the reference scribe line is known to within ±1°. This check shall consist of direct measurements of the rotational positions of the reference scribe line and angle-measuring device sufficient to verify that these specifications are met.

Annex A in section 18 of this method gives recommended procedures for performing the rotational position check, and Table 2G–2 gives an example data form. Procedures other than those recommended in Annex A in section 18 may be used, provided they demonstrate whether the alignment specification is met and are explained in detail in the field test report.

8.3.1 Angle-measuring device rotational offset. The tester shall maintain a record of the angle-measuring device rotational offset, R_{ADO}, as defined in section 3.1. Note that R_{ADO} is assigned a value of 0° when the angle-measuring device is aligned to within ±1° of the rotational position of the reference scribe line. The R_{ADO} shall be used to determine the yaw angle of flow in accordance with section 8.9.4.

8.3.2 Sign of angle-measuring device rotational offset. The sign of R_{ADO} is positive when the angle-measuring device (as viewed from the ''tail'' end of the probe) is positioned in a clockwise direction from the reference scribe line and negative when the device is positioned in a counterclockwise direction from the reference scribe line.

8.3.3 Angle-measuring devices that can be independently adjusted (e.g., by means of a set screw), after being locked into position on the probe sheath, may be used. However, the R_{ADO} must also take into account this adjustment.

8.3.4 Post-test check. If probe extensions remain attached to the main probe throughout the field test, the rotational position check shall be repeated, at a minimum, at the completion of the field test to ensure that the angle-measuring device has remained within ±2° of its rotational position established prior to testing. At the discretion of the tester, additional checks may be conducted after completion of testing at any sample port or after any test run. If the ±2° specification is not met, all measurements made since the last successful rotational position check must be repeated. Section 18.1.1.3 of Annex A provides an example procedure for performing the post-test check.

8.3.5 Exceptions.

8.3.5.1 A rotational position check need not be performed if, for measurements taken at all velocity traverse points, the yaw angle-measuring device is mounted and aligned directly on the reference scribe line specified in sections 6.1.5.1 and 6.1.5.3 and no independent adjustments, as described in section 8.3.3, are made to device's rotational position.

8.3.5.2 If extensions are detached and re-attached to the probe during a field test, a rotational position check need only be performed the first time an extension is added to the probe, rather than each time the extension is re-attached, if the probe extension is designed to be locked into a mechanically fixed rotational position (e.g., through the use of interlocking grooves), that can re-establish the initial rotational position to within ±1°.

8.4 Leak Checks. A pre-test leak check shall be conducted before each field test. A post-test check shall be performed at the end of the field test, but additional leak checks may be conducted after any test run or group of test runs. The post-test check may also serve as the pre-test check for the next group of test runs. If any leak check is failed, all runs since the last passed leak check are invalid. While performing the leak check procedures, also check each pressure device's responsiveness to changes in pressure.

8.4.1 To perform the leak check on a Type S pitot tube, pressurize the pitot impact opening until at least 7.6 cm H_2O (3 in. H_2O) velocity pressure, or a pressure corresponding to approximately 75 percent of the pressure device's measurement scale, whichever is less, registers on the pressure device; then, close off the impact opening. The pressure shall remain stable (±2.5 mm H_2O, ±0.10 in. H_2O) for at least 15 seconds. Repeat this procedure for the static pressure side, except use suction to obtain the required pressure. Other leak-check procedures may be used, if approved by the Administrator.

8.4.2 To perform the leak check on a 3–D probe, pressurize the probe's impact (P_1) opening until at least 7.6 cm H_2O (3 in. H_2O) velocity pressure, or a pressure corresponding to approximately 75 percent of the pressure device's measurement scale, whichever is less, registers on the pressure device; then, close off the impact opening. The pressure shall remain stable (±2.5 mm H_2O, ±0.10 in. H_2O) for at least 15 seconds. Check the P_2 and P_3 pressure ports in the same fashion. Other leak-check procedures may be used, if approved by the Administrator.

8.5 Zeroing the Differential Pressure-measuring Device. Zero each differential pressure-measuring device, including the device used for yaw nulling, before each field test. At a minimum, check the zero after each field test. A zero check may also be performed after any test run or group of test runs. For fluid manometers and mechanical pressure gauges (e.g., Magnehelic∆ gauges), the zero reading shall not deviate from zero by more than ±0.8 mm H_2O (±0.03 in. H_2O) or one minor scale division, whichever is greater, between checks. For electronic manometers, the zero reading shall not deviate from zero between checks by more than: ±0.3 mm H_2O (±0.01 in. H_2O), for full scales less than or equal to 5.1 cm H_2O (2.0 in. H_2O); or ±0.8 mm H_2O (±0.03 in. H_2O), for full scales greater than 5.1 cm H_2O (2.0 in. H_2O). (NOTE: If negative zero drift is not directly readable, estimate the reading based on the position of the gauge oil in the manometer or of the

needle on the pressure gauge.) In addition, for all pressure-measuring devices except those used exclusively for yaw nulling, the zero reading shall not deviate from zero by more than 5 percent of the average measured differential pressure at any distinct process condition or load level. If any zero check is failed at a specific process condition or load level, all runs conducted at that process condition or load level since the last passed zero check are invalid.

8.6 Traverse Point Verification. The number and location of the traverse points shall be selected based on Method 1 guidelines. The stack or duct diameter and port nipple lengths, including any extension of the port nipples into the stack or duct, shall be verified the first time the test is performed; retain and use this information for subsequent field tests, updating it as required. Physically measure the stack or duct dimensions or use a calibrated laser device; do not use engineering drawings of the stack or duct. The probe length necessary to reach each traverse point shall be recorded to within ±6.4 mm (±¼ in.) and, for manual probes, marked on the probe sheath. In determining these lengths, the tester shall take into account both the distance that the port flange projects outside of the stack and the depth that any port nipple extends into the gas stream. The resulting point positions shall reflect the true distances from the inside wall of the stack or duct, so that when the tester aligns any of the markings with the outside face of the stack port, the probe's impact port shall be located at the appropriate distance from the inside wall for the respective Method 1 traverse point. Before beginning testing at a particular location, an out-of-stack or duct verification shall be performed on each probe that will be used to ensure that these position markings are correct. The distances measured during the verification must agree with the previously calculated distances to within ±¼ in. For manual probes, the traverse point positions shall be verified by measuring the distance of each mark from the probe's impact pressure port (the P_1 port for a 3-D probe). A comparable out-of-stack test shall be performed on automated probe systems. The probe shall be extended to each of the prescribed traverse point positions. Then, the accuracy of the positioning for each traverse point shall be verified by measuring the distance between the port flange and the probe's impact pressure port.

8.7 Probe Installation. Insert the probe into the test port. A solid material shall be used to seal the port.

8.8 System Response Time. Determine the response time of the probe measurement system. Insert and position the ''cold'' probe (at ambient temperature and pressure) at any Method 1 traverse point. Read and record the probe differential pressure, temperature, and elapsed time at 15-second intervals until stable readings for both pressure and temperature are achieved. The response time is the longer of these two elapsed times. Record the response time.

8.9 Sampling.

8.9.1 Yaw angle measurement protocol. With manual probes, yaw angle measurements may be obtained in two alternative ways during the field test, either by using a yaw angle-measuring device (e.g., digital inclinometer) affixed to the probe, or using a protractor wheel and pointer assembly. For horizontal traversing, either approach may be used. For vertical traversing, i.e., when measuring from on top or into the bottom of a horizontal duct, only the protractor wheel and pointer assembly may be used. With automated probes, curve-fitting protocols may be used to obtain yaw-angle measurements.

8.9.1.1 If a yaw angle-measuring device affixed to the probe is to be used, lock the device on the probe sheath, aligning it either on the reference scribe line or in the rotational offset position established under section 8.3.1.

8.9.1.2 If a protractor wheel and pointer assembly is to be used, follow the procedures in Annex B of this method.

8.9.1.3 Curve-fitting procedures. Curve-fitting routines sweep through a range of yaw angles to create curves correlating pressure to yaw position. To find the zero yaw position and the yaw angle of flow, the curve found in the stack is computationally compared to a similar curve that was previously generated under controlled conditions in a wind tunnel. A probe system that uses a curve-fitting routine for determining the yaw-null position of the probe head may be used, provided that it is verified in a wind tunnel to be able to determine the yaw angle of flow to within ±1°.

8.9.1.4 Other yaw angle determination procedures. If approved by the Administrator, other procedures for determining yaw angle may be used, provided that they are verified in a wind tunnel to be able to perform the yaw angle calibration procedure as described in section 10.5.

8.9.2 Sampling strategy. At each traverse point, first yaw-null the probe, as described in section 8.9.3, below. Then, with the probe oriented into the direction of flow, measure and record the yaw angle, the differential pressure and the temperature at the traverse point, after stable readings are achieved, in accordance with sections 8.9.4 and 8.9.5. At the start of testing in each port (i.e., after a probe has been inserted into the flue gas stream), allow at least the response time to elapse before beginning to take measurements at the first traverse point accessed from that port. Provided that the probe is

not removed from the flue gas stream, measurements may be taken at subsequent traverse points accessed from the same test port without waiting again for the response time to elapse.

8.9.3 Yaw-nulling procedure. In preparation for yaw angle determination, the probe must first be yaw nulled. After positioning the probe at the appropriate traverse point, perform the following procedures.

8.9.3.1 For Type S probes, rotate the probe until a null differential pressure reading is obtained. The direction of the probe rotation shall be such that the thermocouple is located downstream of the probe pressure ports at the yaw-null position. Rotate the probe 90° back from the yaw-null position to orient the impact pressure port into the direction of flow. Read and record the angle displayed by the angle-measuring device.

8.9.3.2 For 3-D probes, rotate the probe until a null differential pressure reading (the difference in pressures across the P_2 and P_3 pressure ports is zero, i.e., $P_2 = P_3$) is indicated by the yaw angle pressure gauge. Read and record the angle displayed by the angle-measuring device.

8.9.3.3 Sign of the measured angle. The angle displayed on the angle-measuring device is considered positive when the probe's impact pressure port (as viewed from the ''tail'' end of the probe) is oriented in a clockwise rotational position relative to the stack or duct axis and is considered negative when the probe's impact pressure port is oriented in a counterclockwise rotational position (see Figure 2G–7).

8.9.4 Yaw angle determination. After performing the applicable yaw-nulling procedure in section 8.9.3, determine the yaw angle of flow according to one of the following procedures. Special care must be observed to take into account the signs of the recorded angle reading and all offsets.

8.9.4.1 Direct-reading. If all rotational offsets are zero or if the angle-measuring device rotational offset (R_{ADO}) determined in section 8.3 exactly compensates for the scribe line rotational offset (R_{SLO}) determined in section 10.5, then the magnitude of the yaw angle is equal to the displayed angle-measuring device reading from section 8.9.3.1 or 8.9.3.2. The algebraic sign of the yaw angle is determined in accordance with section 8.9.3.3. [NOTE: Under certain circumstances (e.g., testing of horizontal ducts) a 90° adjustment to the angle-measuring device readings may be necessary to obtain the correct yaw angles.]

8.9.4.2 Compensation for rotational offsets during data reduction. When the angle-measuring device rotational offset does not compensate for reference scribe line rotational offset, the following procedure shall be used to determine the yaw angle:

(a) Enter the reading indicated by the angle-measuring device from section 8.9.3.1 or 8.9.3.2.

(b) Associate the proper algebraic sign from section 8.9.3.3 with the reading in step (a).

(c) Subtract the reference scribe line rotational offset, R_{SLO}, from the reading in step (b).

(d) Subtract the angle-measuring device rotational offset, R_{ADO}, if any, from the result obtained in step (c).

(e) The final result obtained in step (d) is the yaw angle of flow.

[NOTE: It may be necessary to first apply a 90° adjustment to the reading in step (a), in order to obtain the correct yaw angle.]

8.9.4.3 Record the yaw angle measurements on a form similar to Table 2G–3.

8.9.5 Impact velocity determination. Maintain the probe rotational position established during the yaw angle determination. Then, begin recording the pressure-measuring device readings. These pressure measurements shall be taken over a sampling period of sufficiently long duration to ensure representative readings at each traverse point. If the pressure measurements are determined from visual readings of the pressure device or display, allow sufficient time to observe the pulsation in the readings to obtain a sight-weighted average, which is then recorded manually. If an automated data acquisition system (e.g., data logger, computer-based data recorder, strip chart recorder) is used to record the pressure measurements, obtain an integrated average of all pressure readings at the traverse point. Stack or duct gas temperature measurements shall be recorded, at a minimum, once at each traverse point. Record all necessary data as shown in the example field data form (Table 2G–3).

8.9.6 Alignment check. For manually operated probes, after the required yaw angle and differential pressure and temperature measurements have been made at each traverse point, verify (e.g., by visual inspection) that the yaw angle-measuring device has remained in proper alignment with the reference scribe line or with the rotational offset position established in section 8.3. If, for a particular traverse point, the angle-measuring device is found to be in proper alignment, proceed to the next traverse point; otherwise, re-align the device and repeat the angle and differential pressure measurements at the traverse point. In the course of a traverse, if a mark used to properly align the angle-measuring device (e.g., as described in section 18.1.1.1) cannot be located, re-establish the alignment mark before proceeding with the traverse.

8.10 Probe Plugging. Periodically check for plugging of the pressure ports by observing the responses on the pressure differential

readouts. Plugging causes erratic results or sluggish responses. Rotate the probe to determine whether the readouts respond in the expected direction. If plugging is detected, correct the problem and repeat the affected measurements.

8.11 Static Pressure. Measure the static pressure in the stack or duct using the equipment described in section 6.7.

8.11.1 If a Type S probe is used for this measurement, position the probe at or between any traverse point(s) and rotate the probe until a null differential pressure reading is obtained. Disconnect the tubing from one of the pressure ports; read and record the ΔP. For pressure devices with one-directional scales, if a deflection in the positive direction is noted with the negative side disconnected, then the static pressure is positive. Likewise, if a deflection in the positive direction is noted with the positive side disconnected, then the static pressure is negative.

8.11.2 If a 3–D probe is used for this measurement, position the probe at or between any traverse point(s) and rotate the probe until a null differential pressure reading is obtained at P_2–P_3. Rotate the probe 90°. Disconnect the P_2 pressure side of the probe and read the pressure P_1–P_{bar} and record as the static pressure. (NOTE: The spherical probe, specified in section 6.1.2 of Method 2F, is unable to provide this measurement and shall not be used to take static pressure measurements.)

8.12 Atmospheric Pressure. Determine the atmospheric pressure at the sampling elevation during each test run following the procedure described in section 2.5 of Method 2.

8.13 Molecular Weight. Determine the stack or duct gas dry molecular weight. For combustion processes or processes that emit essentially CO_2, O_2, CO, and N_2, use Method 3 or 3A. For processes emitting essentially air, an analysis need not be conducted; use a dry molecular weight of 29.0. Other methods may be used, if approved by the Administrator.

8.14 Moisture. Determine the moisture content of the stack gas using Method 4 or equivalent.

8.15 Data Recording and Calculations. Record all required data on a form similar to Table 2G–3.

8.15.1 2–D probe calibration coefficient. When a Type S pitot tube is used in the field, the appropriate calibration coefficient as determined in section 10.6 shall be used to perform velocity calculations. For calibrated Type S pitot tubes, the A-side coefficient shall be used when the A-side of the tube faces the flow, and the B-side coefficient shall be used when the B-side faces the flow.

8.15.2 3–D calibration coefficient. When a 3–D probe is used to collect data with this method, follow the provisions for the calibration of 3–D probes in section 10.6 of Method 2F to obtain the appropriate velocity calibration coefficient (F_2 as derived using Equation 2F–2 in Method 2F) corresponding to a pitch angle position of 0°.

8.15.3 Calculations. Calculate the yaw-adjusted velocity at each traverse point using the equations presented in section 12.2. Calculate the test run average stack gas velocity by finding the arithmetic average of the point velocity results in accordance with sections 12.3 and 12.4, and calculate the stack gas volumetric flow rate in accordance with section 12.5 or 12.6, as applicable.

9.0 Quality Control

9.1 Quality Control Activities. In conjunction with the yaw angle determination and the pressure and temperature measurements specified in section 8.9, the following quality control checks should be performed.

9.1.1 Range of the differential pressure gauge. In accordance with the specifications in section 6.4, ensure that the proper differential pressure gauge is being used for the range of ΔP values encountered. If it is necessary to change to a more sensitive gauge, replace the gauge with a gauge calibrated according to section 10.3.3, perform the leak check described in section 8.4 and the zero check described in section 8.5, and repeat the differential pressure and temperature readings at each traverse point.

9.1.2 Horizontal stability check. For horizontal traverses of a stack or duct, visually check that the probe shaft is maintained in a horizontal position prior to taking a pressure reading. Periodically, during a test run, the probe's horizontal stability should be verified by placing a carpenter's level, a digital inclinometer, or other angle-measuring device on the portion of the probe sheath that extends outside of the test port. A comparable check should be performed by automated systems.

10.0 Calibration

10.1 Wind Tunnel Qualification Checks. To qualify for use in calibrating probes, a wind tunnel shall have the design features specified in section 6.11 and satisfy the following qualification criteria. The velocity pressure cross-check in section 10.1.1 and axial flow verification in section 10.1.2 shall be performed before the initial use of the wind tunnel and repeated immediately after any alteration occurs in the wind tunnel's configuration, fans, interior surfaces, straightening vanes, controls, or other properties that could reasonably be expected to alter the flow pattern or velocity stability in the tunnel. The owner or operator of a wind tunnel used to calibrate probes according to this method shall maintain records documenting that the wind tunnel meets the requirements of sections 10.1.1 and 10.1.2 and

shall provide these records to the Administrator upon request.

10.1.1 Velocity pressure cross-check. To verify that the wind tunnel produces the same velocity at the tested probe head as at the calibration pitot tube impact port, perform the following cross-check. Take three differential pressure measurements at the fixed calibration pitot tube location, using the calibration pitot tube specified in section 6.10, and take three measurements with the calibration pitot tube at the wind tunnel calibration location, as defined in section 3.21. Alternate the measurements between the two positions. Perform this procedure at the lowest and highest velocity settings at which the probes will be calibrated. Record the values on a form similar to Table 2G–4. At each velocity setting, the average velocity pressure obtained at the wind tunnel calibration location shall be within ±2 percent or 2.5 mm H_2O (0.01 in. H_2O), whichever is less restrictive, of the average velocity pressure obtained at the fixed calibration pitot tube location. This comparative check shall be performed at 2.5-cm (1-in.), or smaller, intervals across the full length, width, and depth (if applicable) of the wind tunnel calibration location. If the criteria are not met at every tested point, the wind tunnel calibration location must be redefined, so that acceptable results are obtained at every point. Include the results of the velocity pressure cross-check in the calibration data section of the field test report. (See section 16.1.4.)

10.1.2 Axial flow verification. The following procedures shall be performed to demonstrate that there is fully developed axial flow within the wind tunnel calibration location and at the calibration pitot tube location. Two options are available to conduct this check.

10.1.2.1 Using a calibrated 3–D probe. A probe that has been previously calibrated in a wind tunnel with documented axial flow (as defined in section 3.22) may be used to conduct this check. Insert the calibrated 3–D probe into the wind tunnel test section using the tested probe port. Following the procedures in sections 8.9 and 12.2 of Method 2F, determine the yaw and pitch angles at all the point(s) in the test section where the velocity pressure cross-check, as specified in section 10.1.1, is performed. This includes all the points in the calibration location and the point where the calibration pitot tube will be located. Determine the yaw and pitch angles at each point. Repeat these measurements at the highest and lowest velocities at which the probes will be calibrated. Record the values on a form similar to Table 2G–5. Each measured yaw and pitch angle shall be within ±3° of 0°. Exceeding the limits indicates unacceptable flow in the test section. Until the problem is corrected and acceptable flow is verified by repetition of this procedure, the wind tunnel shall not be used for calibration of probes. Include the results of the axial flow verification in the calibration data section of the field test report. (See section 16.1.4.)

10.1.2.2 Using alternative probes. Axial flow verification may be performed using an uncalibrated prism-shaped 3–D probe (e.g., DA or DAT probe) or an uncalibrated wedge probe. (Figure 2G–8 illustrates a typical wedge probe.) This approach requires use of two ports: the tested probe port and a second port located 90° from the tested probe port. Each port shall provide access to all the points within the wind tunnel test section where the velocity pressure cross-check, as specified in section 10.1.1, is conducted. The probe setup shall include establishing a reference yaw-null position on the probe sheath to serve as the location for installing the angle-measuring device. Physical design features of the DA, DAT, and wedge probes are relied on to determine the reference position. For the DA or DAT probe, this reference position can be determined by setting a digital inclinometer on the flat facet where the P_1 pressure port is located and then identifying the rotational position on the probe sheath where a second angle-measuring device would give the same angle reading. The reference position on a wedge probe shaft can be determined either geometrically or by placing a digital inclinometer on each side of the wedge and rotating the probe until equivalent readings are obtained. With the latter approach, the reference position is the rotational position on the probe sheath where an angle-measuring device would give a reading of 0°. After installation of the angle-measuring device in the reference yaw-null position on the probe sheath, determine the yaw angle from the tested port. Repeat this measurement using the 90° offset port, which provides the pitch angle of flow. Determine the yaw and pitch angles at all the point(s) in the test section where the velocity pressure cross-check, as specified in section 10.1.1, is performed. This includes all the points in the wind tunnel calibration location and the point where the calibration pitot tube will be located. Perform this check at the highest and lowest velocities at which the probes will be calibrated. Record the values on a form similar to Table 2G–5. Each measured yaw and pitch angle shall be within ±3° of 0°. Exceeding the limits indicates unacceptable flow in the test section. Until the problem is corrected and acceptable flow is verified by repetition of this procedure, the wind tunnel shall not be used for calibration of probes. Include the results in the probe calibration report.

10.1.3 Wind tunnel audits.

10.1.3.1 Procedure. Upon the request of the Administrator, the owner or operator of a wind tunnel shall calibrate a 2-D audit probe in accordance with the procedures described

in sections 10.3 through 10.6. The calibration shall be performed at two velocities that encompass the velocities typically used for this method at the facility. The resulting calibration data shall be submitted to the Agency in an audit test report. These results shall be compared by the Agency to reference calibrations of the audit probe at the same velocity settings obtained at two different wind tunnels.

10.1.3.2 Acceptance criterion. The audited tunnel's calibration coefficient is acceptable if it is within ±3 percent of the reference calibrations obtained at each velocity setting by one (or both) of the wind tunnels. If the acceptance criterion is not met at each calibration velocity setting, the audited wind tunnel shall not be used to calibrate probes for use under this method until the problems are resolved and acceptable results are obtained upon completion of a subsequent audit.

10.2 Probe Inspection.

10.2.1 Type S probe. Before each calibration of a Type S probe, verify that one leg of the tube is permanently marked A, and the other, B. Carefully examine the pitot tube from the top, side, and ends. Measure the angles (α_1, α_2, β_1, and β_2) and the dimensions (w and z) illustrated in Figures 2–2 and 2–3 in Method 2. Also measure the dimension A, as shown in the diagram in Table 2G–1, and the external tubing diameter (dimension D_t, Figure 2–2b in Method 2). For the purposes of this method, D_t shall be no less than 9.5 mm (⅜ in.). The base-to-opening plane distances P_A and P_B in Figure 2–3 of Method 2 shall be equal, and the dimension A in Table 2G–1 should be between $2.10D_t$ and $3.00D_t$. Record the inspection findings and probe measurements on a form similar to Table CD2–1 of the ''Quality Assurance Handbook for Air Pollution Measurement Systems: Volume III, Stationary Source-Specific Methods' (EPA/600/R–94/038c, September 1994). For reference, this form is reproduced herein as Table 2G–1. The pitot tube shall not be used under this method if it fails to meet the specifications in this section and the alignment specifications in section 6.1.1. All Type S probes used to collect data with this method shall be calibrated according to the procedures outlined in sections 10.3 through 10.6 below. During calibration, each Type S pitot tube shall be configured in the same manner as used, or planned to be used, during the field test, including all components in the probe assembly (e.g., thermocouple, probe sheath, sampling nozzle). Probe shaft extensions that do not affect flow around the probe head need not be attached during calibration.

10.2.2 3-D probe. If a 3-D probe is used to collect data with this method, perform the pre-calibration inspection according to procedures in Method 2F, section 10.2.

10.3 Pre-Calibration Procedures. Prior to calibration, a scribe line shall have been placed on the probe in accordance with section 10.4. The yaw angle and velocity calibration procedures shall not begin until the pretest requirements in sections 10.3.1 through 10.3.4 have been met.

10.3.1 Perform the horizontal straightness check described in section 8.2 on the probe assembly that will be calibrated in the wind tunnel.

10.3.2 Perform a leak check in accordance with section 8.4.

10.3.3 Except as noted in section 10.3.3.3, calibrate all differential pressure-measuring devices to be used in the probe calibrations, using the following procedures. At a minimum, calibrate these devices on each day that probe calibrations are performed.

10.3.3.1 Procedure. Before each wind tunnel use, all differential pressure-measuring devices shall be calibrated against the reference device specified in section 6.4.3 using a common pressure source. Perform the calibration at three reference pressures representing 30, 60, and 90 percent of the full-scale range of the pressure-measuring device being calibrated. For an inclined-vertical manometer, perform separate calibrations on the inclined and vertical portions of the measurement scale, considering each portion of the scale to be a separate full-scale range. [For example, for a manometer with a 0-to 2.5-cm H_2O (0-to 1-in. H_2O) inclined scale and a 2.5-to 12.7-cm H_2O (1-to 5-in. H_2O) vertical scale, calibrate the inclined portion at 7.6, 15.2, and 22.9 mm H_2O (0.3, 0.6, and 0.9 in. H_2O), and calibrate the vertical portion at 3.8, 7.6, and 11.4 cm H_2O (1.5, 3.0, and 4.5 in. H_2O).] Alternatively, for the vertical portion of the scale, use three evenly spaced reference pressures, one of which is equal to or higher than the highest differential pressure expected in field applications.

10.3.3.2 Acceptance criteria. At each pressure setting, the two pressure readings made using the reference device and the pressure-measuring device being calibrated shall agree to within ±2 percent of full scale of the device being calibrated or 0.5 mm H_2O (0.02 in. H_2O), whichever is less restrictive. For an inclined-vertical manometer, these requirements shall be met separately using the respective full-scale upper limits of the inclined and vertical portions of the scale. Differential pressure-measuring devices not meeting the ±2 percent of full scale or 0.5 mm H_2O (0.02 in. H_2O) calibration requirement shall not be used.

10.3.3.3 Exceptions. Any precision manometer that meets the specifications for a reference device in section 6.4.3 and that is not used for field testing does not require calibration, but must be leveled and zeroed before each wind tunnel use. Any pressure device used exclusively for yaw nulling does not require calibration, but shall be checked

for responsiveness to rotation of the probe prior to each wind tunnel use.

10.3.4 Calibrate digital inclinometers on each day of wind tunnel or field testing (prior to beginning testing) using the following procedures. Calibrate the inclinometer according to the manufacturer's calibration procedures. In addition, use a triangular block (illustrated in Figure 2G–9) with a known angle θ, independently determined using a protractor or equivalent device, between two adjacent sides to verify the inclinometer readings. (NOTE: If other angle-measuring devices meeting the provisions of section 6.2.3 are used in place of a digital inclinometer, comparable calibration procedures shall be performed on such devices.) Secure the triangular block in a fixed position. Place the inclinometer on one side of the block (side A) to measure the angle of inclination (R_1). Repeat this measurement on the adjacent side of the block (side B) using the inclinometer to obtain a second angle reading (R_2). The difference of the sum of the two readings from 180° (i.e., $180°-R_1-R_2$) shall be within ±2° of the known angle, θ.

10.4 Placement of Reference Scribe Line. Prior to the first calibration of a probe, a line shall be permanently inscribed on the main probe sheath to serve as a reference mark for determining yaw angles. Annex C in section 18 of this method gives a guideline for placement of the reference scribe line.

10.4.1 This reference scribe line shall meet the specifications in sections 6.1.5.1 and 6.1.5.3 of this method. To verify that the alignment specification in section 6.1.5.3 is met, secure the probe in a horizontal position and measure the rotational angle of each scribe line and scribe line segment using an angle-measuring device that meets the specifications in section 6.2.1 or 6.2.3. For any scribe line that is longer than 30.5 cm (12 in.), check the line's rotational position at 30.5-cm (12-in.) intervals. For each line segment that is 12 in. or less in length, check the rotational position at the two endpoints of the segment. To meet the alignment specification in section 6.1.5.3, the minimum and maximum of all of the rotational angles that are measured along the full length of main probe must not differ by more than 2°. (NOTE: A short reference scribe line segment [e.g., 15.2 cm (6 in.) or less in length] meeting the alignment specifications in section 6.1.5.3 is fully acceptable under this method. See section 18.1.1.1 of Annex A for an example of a probe marking procedure, suitable for use with a short reference scribe line.)

10.4.2 The scribe line should be placed on the probe first and then its offset from the yaw-null position established (as specified in section 10.5). The rotational position of the reference scribe line relative to the yaw-null position of the probe, as determined by the yaw angle calibration procedure in section 10.5, is the reference scribe line rotational offset, R_{SLO}. The reference scribe line rotational offset shall be recorded and retained as part of the probe's calibration record.

10.4.3 Scribe line for automated probes. A scribe line may not be necessary for an automated probe system if a reference rotational position of the probe is built into the probe system design. For such systems, a ''flat'' (or comparable, clearly identifiable physical characteristic) should be provided on the probe casing or flange plate to ensure that the reference position of the probe assembly remains in a vertical or horizontal position. The rotational offset of the flat (or comparable, clearly identifiable physical characteristic) needed to orient the reference position of the probe assembly shall be recorded and maintained as part of the automated probe system's specifications.

10.5 Yaw Angle Calibration Procedure. For each probe used to measure yaw angles with this method, a calibration procedure shall be performed in a wind tunnel meeting the specifications in section 10.1 to determine the rotational position of the reference scribe line relative to the probe's yaw-null position. This procedure shall be performed on the main probe with all devices that will be attached to the main probe in the field [such as thermocouples, resistance temperature detectors (RTDs), or sampling nozzles] that may affect the flow around the probe head. Probe shaft extensions that do not affect flow around the probe head need not be attached during calibration. At a minimum, this procedure shall include the following steps.

10.5.1 Align and lock the angle-measuring device on the reference scribe line. If a marking procedure (such as described in section 18.1.1.1) is used, align the angle-measuring device on a mark within ±1° of the rotational position of the reference scribe line. Lock the angle-measuring device onto the probe sheath at this position.

10.5.2 Zero the pressure-measuring device used for yaw nulling.

10.5.3 Insert the probe assembly into the wind tunnel through the entry port, positioning the probe's impact port at the calibration location. Check the responsiveness of the pressure-measurement device to probe rotation, taking corrective action if the response is unacceptable.

10.5.4 Ensure that the probe is in a horizontal position, using a carpenter's level.

10.5.5 Rotate the probe either clockwise or counterclockwise until a yaw null [zero ΔP for a Type S probe or zero (P_2-P_3) for a 3–D probe] is obtained. If using a Type S probe with an attached thermocouple, the direction of the probe rotation shall be such that the thermocouple is located downstream of the probe pressure ports at the yaw-null position.

10.5.6 Use the reading displayed by the angle-measuring device at the yaw-null position to determine the magnitude of the reference scribe line rotational offset, R_{SLO}, as defined in section 3.15. Annex D in section 18 of this method gives a recommended procedure for determining the magnitude of R_{SLO} with a digital inclinometer and a second procedure for determining the magnitude of R_{SLO} with a protractor wheel and pointer device. Table 2G–6 gives an example data form and Table 2G–7 is a look-up table with the recommended procedure. Procedures other than those recommended in Annex D in section 18 may be used, if they can determine R_{SLO} to within 1° and are explained in detail in the field test report. The algebraic sign of R_{SLO} will either be positive if the rotational position of the reference scribe line (as viewed from the ''tail'' end of the probe) is clockwise, or negative, if counterclockwise with respect to the probe's yaw-null position. (This is illustrated in Figure 2G–10.)

10.5.7 The steps in sections 10.5.3 through 10.5.6 shall be performed twice at each of the velocities at which the probe will be calibrated (in accordance with section 10.6). Record the values of R_{SLO}.

10.5.8 The average of all of the R_{SLO} values shall be documented as the reference scribe line rotational offset for the probe.

10.5.9 Use of reference scribe line offset. The reference scribe line rotational offset shall be used to determine the yaw angle of flow in accordance with section 8.9.4.

10.6 Velocity Calibration Procedure. When a 3–D probe is used under this method, follow the provisions for the calibration of 3–D probes in section 10.6 of Method 2F to obtain the necessary velocity calibration coefficients (F_2 as derived using Equation 2F–2 in Method 2F) corresponding to a pitch angle position of 0°. The following procedure applies to Type S probes. This procedure shall be performed on the main probe and all devices that will be attached to the main probe in the field (e.g., thermocouples, RTDs, sampling nozzles) that may affect the flow around the probe head. Probe shaft extensions that do not affect flow around the probe head need not be attached during calibration. (Note: If a sampling nozzle is part of the assembly, two additional requirements must be satisfied before proceeding. The distance between the nozzle and the pitot tube shall meet the minimum spacing requirement prescribed in Method 2, and a wind tunnel demonstration shall be performed that shows the probe's ability to yaw null is not impaired when the nozzle is drawing sample.) To obtain velocity calibration coefficient(s) for the tested probe, proceed as follows.

10.6.1 Calibration velocities. The tester may calibrate the probe at two nominal wind tunnel velocity settings of 18.3 m/sec and 27.4 m/sec (60 ft/sec and 90 ft/sec) and average the results of these calibrations, as described in sections 10.6.12 through 10.6.14, in order to generate the calibration coefficient, C_p. If this option is selected, this calibration coefficient may be used for all field applications where the velocities are 9.1 m/sec (30 ft/sec) or greater. Alternatively, the tester may customize the probe calibration for a particular field test application (or for a series of applications), based on the expected average velocity(ies) at the test site(s). If this option is selected, generate the calibration coefficients by calibrating the probe at two nominal wind tunnel velocity settings, one of which is less than or equal to and the other greater than or equal to the expected average velocity(ies) for the field application(s), and average the results as described in sections 10.6.12 through 10.6.14. Whichever calibration option is selected, the probe calibration coefficient(s) obtained at the two nominal calibration velocities shall meet the conditions specified in sections 10.6.12 through 10.6.14.

10.6.2 Connect the tested probe and calibration pitot tube to their respective pressure-measuring devices. Zero the pressure-measuring devices. Inspect and leak-check all pitot lines; repair or replace them, if necessary. Turn on the fan, and allow the wind tunnel air flow to stabilize at the first of the selected nominal velocity settings.

10.6.3 Position the calibration pitot tube at its measurement location (determined as outlined in section 6.11.4.3), and align the tube so that its tip is pointed directly into the flow. Ensure that the entry port surrounding the tube is properly sealed. The calibration pitot tube may either remain in the wind tunnel throughout the calibration, or be removed from the wind tunnel while measurements are taken with the probe being calibrated.

10.6.4 Check the zero setting of each pressure-measuring device.

10.6.5 Insert the tested probe into the wind tunnel and align it so that the designated pressure port (e.g., either the A-side or B-side of a Type S probe) is pointed directly into the flow and is positioned within the wind tunnel calibration location (as defined in section 3.21). Secure the probe at the 0° pitch angle position. Ensure that the entry port surrounding the probe is properly sealed.

10.6.6 Read the differential pressure from the calibration pitot tube (ΔP_{std}), and record its value. Read the barometric pressure to within ±2.5 mm Hg (±0.1 in. Hg) and the temperature in the wind tunnel to within 0.6°C (1°F). Record these values on a data form similar to Table 2G–8.

10.6.7 After the tested probe's differential pressure gauges have had sufficient time to stabilize, yaw null the probe (and then rotate it back 90° for Type S probes), then obtain the differential pressure reading (ΔP). Record

the yaw angle and differential pressure readings.

10.6.8 Take paired differential pressure measurements with the calibration pitot tube and tested probe (according to sections 10.6.6 and 10.6.7). The paired measurements in each replicate can be made either simultaneously (i.e., with both probes in the wind tunnel) or by alternating the measurements of the two probes (i.e., with only one probe at a time in the wind tunnel).

10.6.9 Repeat the steps in sections 10.6.6 through 10.6.8 at the same nominal velocity setting until three pairs of ΔP readings have been obtained from the calibration pitot tube and the tested probe.

10.6.10 Repeat the steps in sections 10.6.6 through 10.6.9 above for the A-side and B-side of the Type S pitot tube. For a probe assembly constructed such that its pitot tube is always used in the same orientation, only one side of the pitot tube need be calibrated (the side that will face the flow). However, the pitot tube must still meet the alignment and dimension specifications in section 6.1.1 and must have an average deviation (σ) value of 0.01 or less as provided in section 10.6.12.4.

10.6.11 Repeat the calibration procedures in sections 10.6.6 through 10.6.10 at the second selected nominal wind tunnel velocity setting.

10.6.12 Perform the following calculations separately on the A-side and B-side values.

10.6.12.1 Calculate a C_p value for each of the three replicates performed at the lower velocity setting where the calibrations were performed using Equation 2–2 in section 4.1.4 of Method 2.

10.6.12.2 Calculate the arithmetic average, $C_{p(avg\text{-}low)}$, of the three C_p values.

10.6.12.3 Calculate the deviation of each of the three individual values of C_p from the A-side average $C_{p(avg\text{-}low)}$ value using Equation 2–3 in Method 2.

10.6.12.4 Calculate the average deviation (σ) of the three individual C_p values from $C_{p(avg\text{-}low)}$ using Equation 2–4 in Method 2. Use the Type S pitot tube only if the values of σ (side A) and σ (side B) are less than or equal to 0.01. If both A-side and B-side calibration coefficients are calculated, the absolute value of the difference between $C_{p(avg\text{-}low)}$ (side A) and $C_{p(avg\text{-}low)}$ (side B) must not exceed 0.01.

10.6.13 Repeat the calculations in section 10.6.12 using the data obtained at the higher velocity setting to derive the arithmetic C_p values at the higher velocity setting, $C_{p(avg\text{-}high)}$, and to determine whether the conditions in 10.6.12.4 are met by both the A-side and B-side calibrations at this velocity setting.

10.6.14 Use equation 2G–1 to calculate the percent difference of the averaged C_p values at the two calibration velocities.

$$\%\text{Difference} = \frac{C_{p(avg\text{-}low)} - C_{p(avg\text{-}high)}}{C_{p(avg\text{-}low)}} \times 100\% \quad \text{Eq. 2G-1}$$

The percent difference between the averaged C_p values shall not exceed ±3 percent. If the specification is met, average the A-side values of $C_{p(avg\text{-}low)}$ and $C_{p(avg\text{-}high)}$ to produce a single A-side calibration coefficient, C_p. Repeat for the B-side values if calibrations were performed on that side of the pitot. If the specification is not met, make necessary adjustments in the selected velocity settings and repeat the calibration procedure until acceptable results are obtained.

10.6.15 If the two nominal velocities used in the calibration were 18.3 and 27.4 m/sec (60 and 90 ft/sec), the average C_p from section 10.6.14 is applicable to all velocities 9.1 m/sec (30 ft/sec) or greater. If two other nominal velocities were used in the calibration, the resulting average C_p value shall be applicable only in situations where the velocity calculated using the calibration coefficient is neither less than the lower nominal velocity nor greater than the higher nominal velocity.

10.7 Recalibration. Recalibrate the probe using the procedures in section 10 either within 12 months of its first field use after its most recent calibration or after 10 field tests (as defined in section 3.3), whichever occurs later. In addition, whenever there is visible damage to the probe head, the probe shall be recalibrated before it is used again.

10.8 Calibration of pressure-measuring devices used in the field. Before its initial use in a field test, calibrate each pressure-measuring device (except those used exclusively for yaw nulling) using the three-point calibration procedure described in section 10.3.3. The device shall be recalibrated according to the procedure in section 10.3.3 no later than 90 days after its first field use following its most recent calibration. At the discretion of the tester, more frequent calibrations (e.g., after a field test) may be performed. No adjustments, other than adjustments to the zero setting, shall be made to the device between calibrations.

10.8.1 Post-test calibration check. A single-point calibration check shall be performed on each pressure-measuring device after completion of each field test. At the discretion of the tester, more frequent single-point calibration checks (e.g., after one or more field test runs) may be performed. It is recommended that the post-test check be performed before leaving the field test site. The check shall be performed at a pressure between 50 and 90 percent of full scale by taking a common pressure reading with the tested probe and a reference pressure-measuring device (as described in section 6.4.4) or by challenging the tested device with a reference pressure source (as described in section 6.4.4) or by performing an equivalent check using a reference device approved by the Administrator.

10.8.2 Acceptance criterion. At the selected pressure setting, the pressure readings made using the reference device and the tested device shall agree to within ±3 percent of full scale of the tested device or 0.8 mm H_2O (0.03 in. H_2O), whichever is less restrictive. If this specification is met, the test data collected during the field test are valid. If the specification is not met, all test data collected since the last successful calibration or calibration check are invalid and shall be repeated using a pressure-measuring device with a current, valid calibration. Any device that fails the calibration check shall not be used in a field test until a successful recalibration is performed according to the procedures in section 10.3.3.

10.9 Temperature Gauges. Same as Method 2, section 4.3. The alternative thermocouple calibration procedures outlined in Emission Measurement Center (EMC) Approved Alternative Method (ALT–011) ''Alternative Method 2 Thermocouple Calibration Procedure'' may be performed. Temperature gauges shall be calibrated no more than 30 days prior to the start of a field test or series of field tests and recalibrated no more than 30 days after completion of a field test or series of field tests.

10.10 Barometer. Same as Method 2, section 4.4. The barometer shall be calibrated no more than 30 days prior to the start of a field test or series of field tests.

11.0 Analytical Procedure

Sample collection and analysis are concurrent for this method (see section 8.0).

12.0 Data Analysis and Calculations

These calculations use the measured yaw angle and the differential pressure and temperature measurements at individual traverse points to derive the near-axial flue gas velocity ($v_{a(i)}$) at each of those points. The near-axial velocity values at all traverse points that comprise a full stack or duct traverse are then averaged to obtain the average near-axial stack or duct gas velocity ($v_{a(avg)}$).

12.1 Nomenclature

A = Cross-sectional area of stack or duct at the test port location, m^2 (ft^2).

B_{ws} = Water vapor in the gas stream (from Method 4 or alternative), proportion by volume.

C_p = Pitot tube calibration coefficient, dimensionless.

$F_{2(i)}$ = 3-D probe velocity coefficient at 0 pitch, applicable at traverse point i.

K_p = Pitot tube constant,

$$34.97\,\frac{m}{sec}\left[\frac{(g/g\text{-}mole)(mm\ Hg)}{(^\circ K)(mm\ H_2O)}\right]^{1/2}$$

for the metric system, and

$$85.49\,\frac{ft}{sec}\left[\frac{(lb/lb\text{-}mole)(in.\ Hg)}{(^\circ R)(in.\ H_2O)}\right]^{1/2}$$

for the English system.

M_d = Molecular weight of stack or duct gas, dry basis (see section 8.13), g/g-mole (lb/lb-mole).

M_s = Molecular weight of stack or duct gas, wet basis, g/g-mole (lb/lb-mole).

$$M_s = M_d(1-B_{ws}) + 18.0B_{ws} \quad \text{Eq. 2G-2}$$

P_{bar} = Barometric pressure at velocity measurement site, mm Hg (in. Hg).

P_g = Stack or duct static pressure, mm H_2O (in. H_2O).

P_s = Absolute stack or duct pressure, mm Hg (in. Hg),

$$P_s = P_{bar} + \frac{P_g}{13.6} \quad \text{Eq. 2G-3}$$

P_{std} = Standard absolute pressure, 760 mm Hg (29.92 in. Hg).

13.6 = Conversion from mm H_2O (in. H_2O) to mm Hg (in. Hg).

Q_{sd} = Average dry-basis volumetric stack or duct gas flow rate corrected to standard conditions, dscm/hr (dscf/hr).

Q_{sw} = Average wet-basis volumetric stack or duct gas flow rate corrected to standard conditions, wscm/hr (wscf/hr).

$t_{s(i)}$ = Stack or duct temperature, °C (°F), at traverse point i.

$T_{s(i)}$ = Absolute stack or duct temperature, °K (°R), at traverse point i.

$$T_{s(i)} = 273 + t_{s(i)} \quad \text{Eq. 2G-4}$$

for the metric system, and

$$T_{s(i)} = 460 + t_{s(i)} \quad \text{Eq. 2G-5}$$

for the English system.

$T_{s(avg)}$=Average absolute stack or duct gas temperature across all traverse points.

T_{std}=Standard absolute temperature, 293°K (528°R).

$v_{a(i)}$=Measured stack or duct gas impact velocity, m/sec (ft/sec), at traverse point i.

$v_{a(avg)}$=Average near-axial stack or duct gas velocity, m/sec (ft/sec) across all traverse points.

ΔP_i=Velocity head (differential pressure) of stack or duct gas, mm H_2O (in. H_2O), applicable at traverse point i.

$(P_1\text{-}P_2)$=Velocity head (differential pressure) of stack or duct gas measured by a 3-D probe, mm H_2O (in. H_2O), applicable at traverse point i.

3,600=Conversion factor, sec/hr.

18.0=Molecular weight of water, g/g-mole (lb/lb-mole).

$\theta_{y(i)}$=Yaw angle of the flow velocity vector, at traverse point i.

n=Number of traverse points.

12.2 Traverse Point Velocity Calculations. Perform the following calculations from the measurements obtained at each traverse point.

12.2.1 Selection of calibration coefficient. Select the calibration coefficient as described in section 10.6.1.

12.2.2 Near-axial traverse point velocity. When using a Type S probe, use the following equation to calculate the traverse point near-axial velocity ($v_{a(i)}$) from the differential pressure (ΔP_i), yaw angle ($\theta_{y(i)}$), absolute stack or duct standard temperature ($T_{s(i)}$) measured at traverse point i, the absolute stack or duct pressure (P_s), and molecular weight (M_s).

$$v_{a(i)} = K_p C_p \sqrt{\frac{(\Delta P)_i T_{s(i)}}{P_s M_s}} \left(\cos\theta_{y(i)}\right) \qquad \text{Eq. 2G-6}$$

Use the following equation when using a 3–D probe.

$$v_{a(i)} = K_p F_2 \sqrt{\frac{(P_1 - P_2)_i T_{s(i)}}{P_s M_s}} \left(\cos\theta_{y(i)}\right) \qquad \text{Eq. 2G-7}$$

12.2.3 Handling multiple measurements at a traverse point. For pressure or temperature devices that take multiple measurements at a traverse point, the multiple measurements (or where applicable, their square roots) may first be averaged and the resulting average values used in the equations above. Alternatively, the individual measurements may be used in the equations above and the resulting calculated values may then be averaged to obtain a single traverse point value. With either approach, all of the individual measurements recorded at a traverse point must be used in calculating the applicable traverse point value.

12.3 Average Near-Axial Velocity in Stack or Duct. Use the reported traverse point near-axial velocity in the following equation.

$$v_{a(avg)} = \frac{\sum_{i=1}^{n} v_{a(i)}}{n} \qquad \text{Eq. 2G-8}$$

12.4 Acceptability of Results. The acceptability provisions in section 12.4 of Method 2F apply to 3-D probes used under Method 2G. The following provisions apply to Type S probes. For Type S probes, the test results are acceptable and the calculated value of $v_{a(avg)}$ may be reported as the average near-axial velocity for the test run if the conditions in either section 12.4.1 or 12.4.2 are met.

12.4.1 The average calibration coefficient C_p used in Equation 2G–6 was generated at nominal velocities of 18.3 and 27.4 m/sec (60 and 90 ft/sec) and the value of $v_{a(avg)}$ calculated using Equation 2G–8 is greater than or equal to 9.1 m/sec (30 ft/sec).

12.4.2 The average calibration coefficient C_p used in Equation 2G–6 was generated at nominal velocities other than 18.3 or 27.4 m/sec (60 or 90 ft/sec) and the value of $v_{a(avg)}$ calculated using Equation 2G–8 is greater than or equal to the lower nominal velocity and less than or equal to the higher nominal velocity used to derive the average C_p.

12.4.3 If the conditions in neither section 12.4.1 nor section 12.4.2 are met, the test results obtained from Equation 2G–8 are not

acceptable, and the steps in sections 12.2 and 12.3 must be repeated using an average calibration coefficient C_p that satisfies the conditions in section 12.4.1 or 12.4.2.

12.5 Average Gas Volumetric Flow Rate in Stack or Duct (Wet Basis). Use the following equation to compute the average volumetric flow rate on a wet basis.

$$Q_{sw} = 3{,}600\left(v_{a(avg)}\right)(A)\left(\frac{T_{std}}{T_{s(avg)}}\right)\left(\frac{P_s}{P_{std}}\right) \qquad \text{Eq. 2G-9}$$

12.6 Average Gas Volumetric Flow Rate in Stack or Duct (Dry Basis). Use the following equation to compute the average volumetric flow rate on a dry basis.

$$Q_{sd} = 3{,}600\left(1 - B_{ws}\right)\left(v_{a(avg)}\right)(A)\left(\frac{T_{std}}{T_{s(avg)}}\right)\left(\frac{P_s}{P_{std}}\right) \qquad \text{Eq. 2G-10}$$

13.0 Method Performance. [Reserved]

14.0 Pollution Prevention. [Reserved]

15.0 Waste Management. [Reserved]

16.0 Reporting.

16.1 Field Test Reports. Field test reports shall be submitted to the Agency according to applicable regulatory requirements. Field test reports should, at a minimum, include the following elements.

16.1.1 Description of the source. This should include the name and location of the test site, descriptions of the process tested, a description of the combustion source, an accurate diagram of stack or duct cross-sectional area at the test site showing the dimensions of the stack or duct, the location of the test ports, and traverse point locations and identification numbers or codes. It should also include a description and diagram of the stack or duct layout, showing the distance of the test location from the nearest upstream and downstream disturbances and all structural elements (including breachings, baffles, fans, straighteners, etc.) affecting the flow pattern. If the source and test location descriptions have been previously submitted to the Agency in a document (e.g., a monitoring plan or test plan), referencing the document in lieu of including this information in the field test report is acceptable.

16.1.2 Field test procedures. These should include a description of test equipment and test procedures. Testing conventions, such as traverse point numbering and measurement sequence (e.g., sampling from center to wall, or wall to center), should be clearly stated. Test port identification and directional reference for each test port should be included on the appropriate field test data sheets.

16.1.3 Field test data.

16.1.3.1 Summary of results. This summary should include the dates and times of testing, and the average near-axial gas velocity and the average flue gas volumetric flow results for each run and tested condition.

16.1.3.2 Test data. The following values for each traverse point should be recorded and reported:

(a) Differential pressure at traverse point i (ΔP_i)

(b) Stack or duct temperature at traverse point i ($t_{s(i)}$)

(c) Absolute stack or duct temperature at traverse point i ($T_{s(i)}$)

(d) Yaw angle at traverse point i ($\theta_{y(i)}$)

(e) Stack gas near-axial velocity at traverse point i ($v_{a(i)}$)

16.1.3.3 The following values should be reported once per run:

(a) Water vapor in the gas stream (from Method 4 or alternative), proportion by volume (B_{ws}), measured at the frequency specified in the applicable regulation

(b) Molecular weight of stack or duct gas, dry basis (M_d)

(c) Molecular weight of stack or duct gas, wet basis (M_s)

(d) Stack or duct static pressure (P_g)

(e) Absolute stack or duct pressure (P_s)

(f) Carbon dioxide concentration in the flue gas, dry basis ($\%_d\ CO_2$)

(g) Oxygen concentration in the flue gas, dry basis ($\%_d\ O_2$)

(h) Average near-axial stack or duct gas velocity ($v_{a(avg)}$) across all traverse points

(i) Gas volumetric flow rate corrected to standard conditions, dry or wet basis as required by the applicable regulation (Q_{sd} or Q_{sw})

16.1.3.4 The following should be reported once per complete set of test runs:

(a) Cross-sectional area of stack or duct at the test location (A)

(b) Pitot tube calibration coefficient (C_p)

(c) Measurement system response time (sec)

(d) Barometric pressure at measurement site (P_{bar})

16.1.4 Calibration data. The field test report should include calibration data for all probes and test equipment used in the field test. At a minimum, the probe calibration data reported to the Agency should include the following:

(a) Date of calibration

(b) Probe type

(c) Probe identification number(s) or code(s)

(d) Probe inspection sheets

(e) Pressure measurements and calculations used to obtain calibration coefficients in accordance with section 10.6 of this method

(f) Description and diagram of wind tunnel used for the calibration, including dimensions of cross-sectional area and position and size of the test section

(g) Documentation of wind tunnel qualification tests performed in accordance with section 10.1 of this method

16.1.5 Quality assurance. Specific quality assurance and quality control procedures used during the test should be described.

17.0 Bibliography.

(1) 40 CFR Part 60, Appendix A, Method 1—Sample and velocity traverses for stationary sources.

(2) 40 CFR Part 60, Appendix A, Method 2—Determination of stack gas velocity and volumetric flow rate (Type S pitot tube) .

(3) 40 CFR Part 60, Appendix A, Method 2F—Determination of stack gas velocity and volumetric flow rate with three-dimensional probes.

(4) 40 CFR Part 60, Appendix A, Method 2H—Determination of stack gas velocity taking into account velocity decay near the stack wall.

(5) 40 CFR Part 60, Appendix A, Method 3—Gas analysis for carbon dioxide, oxygen, excess air, and dry molecular weight.

(6) 40 CFR Part 60, Appendix A, Method 3A—Determination of oxygen and carbon dioxide concentrations in emissions from stationary sources (instrumental analyzer procedure).

(7) 40 CFR Part 60, Appendix A, Method 4—Determination of moisture content in stack gases.

(8) Emission Measurement Center (EMC) Approved Alternative Method (ALT–011) ''Alternative Method 2 Thermocouple Calibration Procedure.''

(9) Electric Power Research Institute, Interim Report EPRI TR–106698, ''Flue Gas Flow Rate Measurement Errors,'' June 1996.

(10) Electric Power Research Institute, Final Report EPRI TR–108110, ''Evaluation of Heat Rate Discrepancy from Continuous Emission Monitoring Systems,'' August 1997.

(11) Fossil Energy Research Corporation, Final Report, ''Velocity Probe Tests in Non-axial Flow Fields,'' November 1998, Prepared for the U.S. Environmental Protection Agency.

(12) Fossil Energy Research Corporation, ''Additional Swirl Tunnel Tests: E–DAT and T–DAT Probes,'' February 24, 1999, Technical Memorandum Prepared for U.S. Environmental Protection Agency, P.O. No. 7W–1193–NALX.

(13) Massachusetts Institute of Technology, Report WBWT–TR–1317, ''Calibration of Eight Wind Speed Probes Over a Reynolds Number Range of 46,000 to 725,000 Per Foot, Text and Summary Plots,'' Plus appendices, October 15, 1998, Prepared for The Cadmus Group, Inc.

(14) National Institute of Standards and Technology, Special Publication 250, ''NIST Calibration Services Users Guide 1991,'' Revised October 1991, U.S. Department of Commerce, p. 2.

(15) National Institute of Standards and Technology, 1998, ''Report of Special Test of Air Speed Instrumentation, Four Prandtl Probes, Four S-Type Probes, Four French Probes, Four Modified Kiel Probes,'' Prepared for the U.S. Environmental Protection Agency under IAG #DW13938432–01–0.

(16) National Institute of Standards and Technology, 1998, ''Report of Special Test of Air Speed In-strumentation, Five Autoprobes,'' Prepared for the U.S. Environmental Protection Agency under IAG #DW13938432–01–0.

(17) National Institute of Standards and Technology, 1998, ''Report of Special Test of Air Speed Instrumentation, Eight Spherical Probes,'' Prepared for the U.S. Environmental Protection Agency under IAG #DW13938432–01–0.

(18) National Institute of Standards and Technology, 1998, ''Report of Special Test of Air Speed Instrumentation, Four DAT Probes, '' Prepared for the U.S. Environmental Protection Agency under IAG #DW13938432–01–0.

(19) Norfleet, S.K., ''An Evaluation of Wall Effects on Stack Flow Velocities and Related Overestimation Bias in EPA's Stack Flow Reference Methods,'' EPRI CEMS User's Group Meeting, New Orleans, Louisiana, May 13–15, 1998.

(20) Page, J.J., E.A. Potts, and R.T. Shigehara, ''3–D Pitot Tube Calibration Study,'' EPA Contract No. 68D10009, Work Assignment No. I–121, March 11, 1993.

(21) Shigehara, R.T., W.F. Todd, and W.S. Smith, ''Significance of Errors in Stack Sampling Measurements,'' Presented at the Annual Meeting of the Air Pollution Control Association, St. Louis, Missouri, June 1419, 1970.

(22) The Cadmus Group, Inc., May 1999, ''EPA Flow Reference Method Testing and Analysis: Findings Report,'' EPA/430–R–99–009.

(23) The Cadmus Group, Inc., 1998, ''EPA Flow Reference Method Testing and Analysis: Data Report, Texas Utilities, DeCordova Steam Electric Station, Volume I: Test Description and Appendix A (Data Distribution Package),'' EPA/430–R–98–015a.

(24) The Cadmus Group, Inc., 1998, ''EPA Flow Reference Method Testing and Analysis: Data Report, Texas Utilities, Lake Hubbard Steam Electric Station, Volume I: Test Description and Appendix A (Data Distribution Package),'' EPA/430–R–98–017a.

(25) The Cadmus Group, Inc., 1998, ''EPA Flow Reference Method Testing and Analysis: Data Report, Pennsylvania Electric Co., G.P.U. Genco Homer City Station: Unit 1, Volume I: Test Description and Appendix A (Data Distribution Package),'' EPA/430–R–98–018a.

(26) The Cadmus Group, Inc., 1997, ''EPA Flow Reference Method Testing and Analysis: Wind Tunnel Experimental Results,'' EPA/430–R–97–013.

18.0 Annexes

Annex A, C, and D describe recommended procedures for meeting certain provisions in sections 8.3, 10.4, and 10.5 of this method. Annex B describes procedures to be followed when using the protractor wheel and pointer assembly to measure yaw angles, as provided under section 8.9.1.

18.1 Annex A—Rotational Position Check. The following are recommended procedures that may be used to satisfy the rotational position check requirements of section 8.3 of this method and to determine the angle-measuring device rotational offset (R_{ADO}).

18.1.1 Rotational position check with probe outside stack. Where physical constraints at the sampling location allow full assembly of the probe outside the stack and insertion into the test port, the following procedures should be performed before the start of testing. Two angle-measuring devices that meet the specifications in section 6.2.1 or 6.2.3 are required for the rotational position check. An angle measuring device whose position can be independently adjusted (e.g., by means of a set screw) after being locked into position on the probe sheath shall not be used for this check unless the independent adjustment is set so that the device performs exactly like a device without the capability for independent adjustment. That is, when aligned on the probe such a device must give the same reading as a device that does not have the capability of being independently adjusted. With the fully assembled probe (including probe shaft extensions, if any) secured in a horizontal position, affix one yaw angle-measuring device to the probe sheath and lock it into position on the reference scribe line specified in section 6.1.5.1. Position the second angle-measuring device using the procedure in section 18.1.1.1 or 18.1.1.2.

18.1.1.1 Marking procedure. The procedures in this section should be performed at each location on the fully assembled probe where the yaw angle-measuring device will be mounted during the velocity traverse. Place the second yaw angle-measuring device on the main probe sheath (or extension) at the position where a yaw angle will be measured during the velocity traverse. Adjust the position of the second angle-measuring device until it indicates the same angle (±1°) as the reference device, and affix the second device to the probe sheath (or extension). Record the angles indicated by the two angle-measuring devices on a form similar to table 2G–2. In this position, the second angle-measuring device is considered to be properly positioned for yaw angle measurement. Make a mark, no wider than 1.6 mm (1/16 in.), on the probe sheath (or extension), such that the yaw angle-measuring device can be re-affixed at this same properly aligned position during the velocity traverse.

18.1.1.2 Procedure for probe extensions with scribe lines. If, during a velocity traverse the angle-measuring device will be affixed to a probe extension having a scribe line as specified in section 6.1.5.2, the following procedure may be used to align the extension's scribe line with the reference scribe line instead of marking the extension as described in section 18.1.1.1. Attach the probe extension to the main probe. Align and lock the second angle-measuring device on the probe extension's scribe line. Then, rotate the extension until both measuring devices indicate the same angle (±1°). Lock the extension at this rotational position. Record the angles indicated by the two angle-measuring devices on a form similar to table 2G–2. An angle-measuring device may be aligned at any position on this scribe line during the velocity traverse, if the scribe line meets the alignment specification in section 6.1.5.3.

18.1.1.3 Post-test rotational position check. If the fully assembled probe includes one or more extensions, the following check should be performed immediately after the completion of a velocity traverse. At the discretion of the tester, additional checks may be conducted after completion of testing at

any sample port. Without altering the alignment of any of the components of the probe assembly used in the velocity traverse, secure the fully assembled probe in a horizontal position. Affix an angle-measuring device at the reference scribe line specified in section 6.1.5.1. Use the other angle-measuring device to check the angle at each location where the device was checked prior to testing. Record the readings from the two angle-measuring devices.

18.1.2 Rotational position check with probe in stack. This section applies only to probes that, due to physical constraints, cannot be inserted into the test port as fully assembled with all necessary extensions needed to reach the inner-most traverse point(s).

18.1.2.1 Perform the out-of-stack procedure in section 18.1.1 on the main probe and any attached extensions that will be initially inserted into the test port.

18.1.2.2 Use the following procedures to perform additional rotational position check(s) with the probe in the stack, each time a probe extension is added. Two angle-measuring devices are required. The first of these is the device that was used to measure yaw angles at the preceding traverse point, left in its properly aligned measurement position. The second angle-measuring device is positioned on the added probe extension. Use the applicable procedures in section 18.1.1.1 or 18.1.1.2 to align, adjust, lock, and mark (if necessary) the position of the second angle-measuring device to within ±1° of the first device. Record the readings of the two devices on a form similar to Table 2G–2.

18.1.2.3 The procedure in section 18.1.2.2 should be performed at the first port where measurements are taken. The procedure should be repeated each time a probe extension is re-attached at a subsequent port, unless the probe extensions are designed to be locked into a mechanically fixed rotational position (e.g., through use of interlocking grooves), which can be reproduced from port to port as specified in section 8.3.5.2.

18.2 Annex B—Angle Measurement Protocol for Protractor Wheel and Pointer Device. The following procedure shall be used when a protractor wheel and pointer assembly, such as the one described in section 6.2.2 and illustrated in Figure 2G–5 is used to measure the yaw angle of flow. With each move to a new traverse point, unlock, re-align, and re-lock the probe, angle-pointer collar, and protractor wheel to each other. At each such move, particular attention is required to ensure that the scribe line on the angle pointer collar is either aligned with the reference scribe line on the main probe sheath or is at the rotational offset position established under section 8.3.1. The procedure consists of the following steps:

18.2.1 Affix a protractor wheel to the entry port for the test probe in the stack or duct.

18.2.2 Orient the protractor wheel so that the 0° mark corresponds to the longitudinal axis of the stack or duct. For stacks, vertical ducts, or ports on the side of horizontal ducts, use a digital inclinometer meeting the specifications in section 6.2.1 to locate the 0° orientation. For ports on the top or bottom of horizontal ducts, identify the longitudinal axis at each test port and permanently mark the duct to indicate the 0° orientation. Once the protractor wheel is properly aligned, lock it into position on the test port.

18.2.3 Move the pointer assembly along the probe sheath to the position needed to take measurements at the first traverse point. Align the scribe line on the pointer collar with the reference scribe line or at the rotational offset position established under section 8.3.1. Maintaining this rotational alignment, lock the pointer device onto the probe sheath. Insert the probe into the entry port to the depth needed to take measurements at the first traverse point.

18.2.4 Perform the yaw angle determination as specified in sections 8.9.3 and 8.9.4 and record the angle as shown by the pointer on the protractor wheel. Then, take velocity pressure and temperature measurements in accordance with the procedure in section 8.9.5. Perform the alignment check described in section 8.9.6.

18.2.5 After taking velocity pressure measurements at that traverse point, unlock the probe from the collar and slide the probe through the collar to the depth needed to reach the next traverse point.

18.2.6 Align the scribe line on the pointer collar with the reference scribe line on the main probe or at the rotational offset position established under section 8.3.1. Lock the collar onto the probe.

18.2.7 Repeat the steps in sections 18.2.4 through 18.2.6 at the remaining traverse points accessed from the current stack or duct entry port.

18.2.8 After completing the measurement at the last traverse point accessed from a port, verify that the orientation of the protractor wheel on the test port has not changed over the course of the traverse at that port. For stacks, vertical ducts, or ports on the side of horizontal ducts, use a digital inclinometer meeting the specifications in section 6.2.1 to check the rotational position of the 0° mark on the protractor wheel. For ports on the top or bottom of horizontal ducts, observe the alignment of the angle wheel 0° mark relative to the permanent 0° mark on the duct at that test port. If these observed comparisons exceed ±2° of 0°, all angle and pressure measurements taken at that port since the protractor wheel was last locked into position on the port shall be repeated.

18.2.9 Move to the next stack or duct entry port and repeat the steps in sections 18.2.1 through 18.2.8.

18.3 Annex C—Guideline for Reference Scribe Line Placement. Use of the following guideline is recommended to satisfy the requirements of section 10.4 of this method. The rotational position of the reference scribe line should be either 90° or 180° from the probe's impact pressure port. For Type-S probes, place separate scribe lines, on opposite sides of the probe sheath, if both the A and B sides of the pitot tube are to be used for yaw angle measurements.

18.4 Annex D—Determination of Reference Scribe Line Rotational Offset. The following procedures are recommended for determining the magnitude and sign of a probe's reference scribe line rotational offset, R_{SLO}. Separate procedures are provided for two types of angle-measuring devices: digital inclinometers and protractor wheel and pointer assemblies.

18.4.1 Perform the following procedures on the main probe with all devices that will be attached to the main probe in the field [such as thermocouples, resistance temperature detectors (RTDs), or sampling nozzles] that may affect the flow around the probe head. Probe shaft extensions that do not affect flow around the probe head need not be attached during calibration.

18.4.2 The procedures below assume that the wind tunnel duct used for probe calibration is horizontal and that the flow in the calibration wind tunnel is axial as determined by the axial flow verification check described in section 10.1.2. Angle-measuring devices are assumed to display angles in alternating 0° to 90° and 90° to 0° intervals. If angle-measuring devices with other readout conventions are used or if other calibration wind tunnel duct configurations are used, make the appropriate calculational corrections. For Type-S probes, calibrate the A-side and B-sides separately, using the appropriate scribe line (see section 18.3, above), if both the A and B sides of the pitot tube are to be used for yaw angle determinations.

18.4.2.1 Position the angle-measuring device in accordance with one of the following procedures.

18.4.2.1.1 If using a digital inclinometer, affix the calibrated digital inclinometer to the probe. If the digital inclinometer can be independently adjusted after being locked into position on the probe sheath (e.g., by means of a set screw), the independent adjustment must be set so that the device performs exactly like a device without the capability for independent adjustment. That is, when aligned on the probe the device must give the same readings as a device that does not have the capability of being independently adjusted. Either align it directly on the reference scribe line or on a mark aligned with the scribe line determined according to the procedures in section 18.1.1.1. Maintaining this rotational alignment, lock the digital inclinometer onto the probe sheath.

18.4.2.1.2 If using a protractor wheel and pointer device, orient the protractor wheel on the test port so that the 0° mark is aligned with the longitudinal axis of the wind tunnel duct. Maintaining this alignment, lock the wheel into place on the wind tunnel test port. Align the scribe line on the pointer collar with the reference scribe line or with a mark aligned with the reference scribe line, as determined under section 18.1.1.1. Maintaining this rotational alignment, lock the pointer device onto the probe sheath.

18.4.2.2 Zero the pressure-measuring device used for yaw nulling.

18.4.2.3 Insert the probe assembly into the wind tunnel through the entry port, positioning the probe's impact port at the calibration location. Check the responsiveness of the pressure-measuring device to probe rotation, taking corrective action if the response is unacceptable.

18.4.2.4 Ensure that the probe is in a horizontal position using a carpenter's level.

18.4.2.5 Rotate the probe either clockwise or counterclockwise until a yaw null [zero ΔP for a Type S probe or zero (P_2–P_3) for a 3–D probe] is obtained. If using a Type S probe with an attached thermocouple, the direction of the probe rotation shall be such that the thermocouple is located downstream of the probe pressure ports at the yaw-null position.

18.4.2.6 Read and record the value of θ_{null}, the angle indicated by the angle-measuring device at the yaw-null position. Record the angle reading on a form similar to Table 2G–6. Do not associate an algebraic sign with this reading.

18.4.2.7 Determine the magnitude and algebraic sign of the reference scribe line rotational offset, R_{SLO}. The magnitude of R_{SLO} will be equal to either θ_{null} or ($90° - \theta_{null}$), depending on the type of probe being calibrated and the type of angle-measuring device used. (See Table 2G–7 for a summary.) The algebraic sign of R_{SLO} will either be positive if the rotational position of the reference scribe line is clockwise or negative if counterclockwise with respect to the probe's yaw-null position. Figure 2G–10 illustrates how the magnitude and sign of R_{SLO} are determined.

18.4.2.8 Perform the steps in sections 18.3.2.3 through 18.3.2.7 twice at each of the two calibration velocities selected for the probe under section 10.6. Record the values of R_{SLO} in a form similar to Table 2G–6.

18.4.2.9 The average of all R_{SLO} values is the reference scribe line rotational offset for the probe.

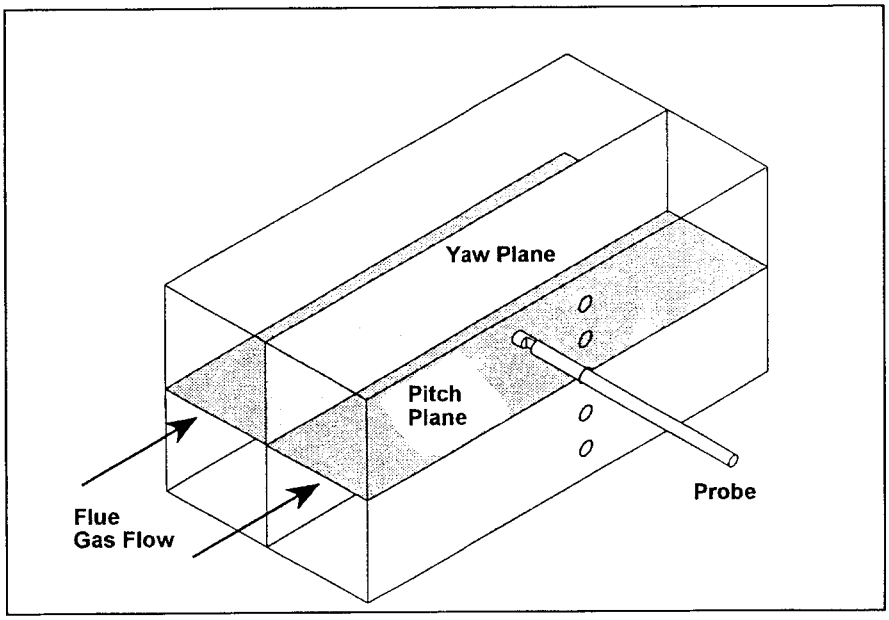

Figure 2G-1. Illustration of yaw and pitch planes in stack or duct.

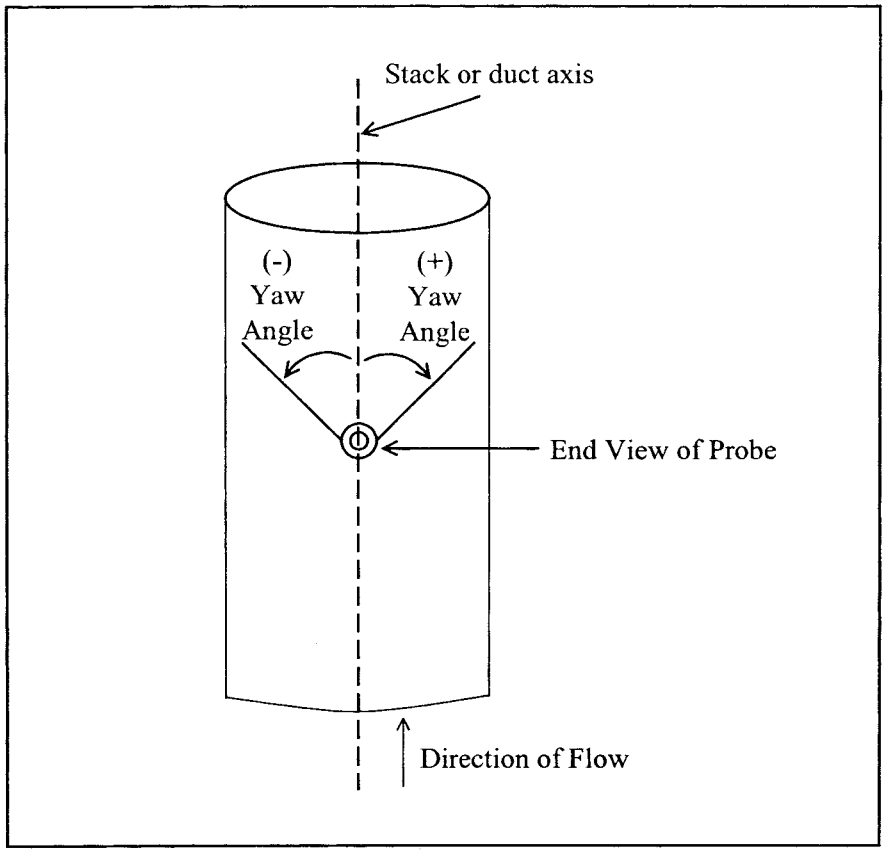

Figure 2G-2. Illustration of probe rotation representing positive and negative yaw angles.

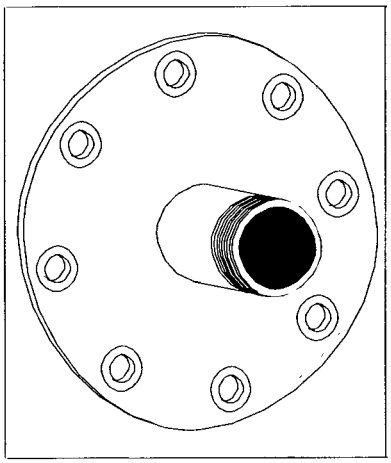

Figure 2G-3. Example bushing sleeve.

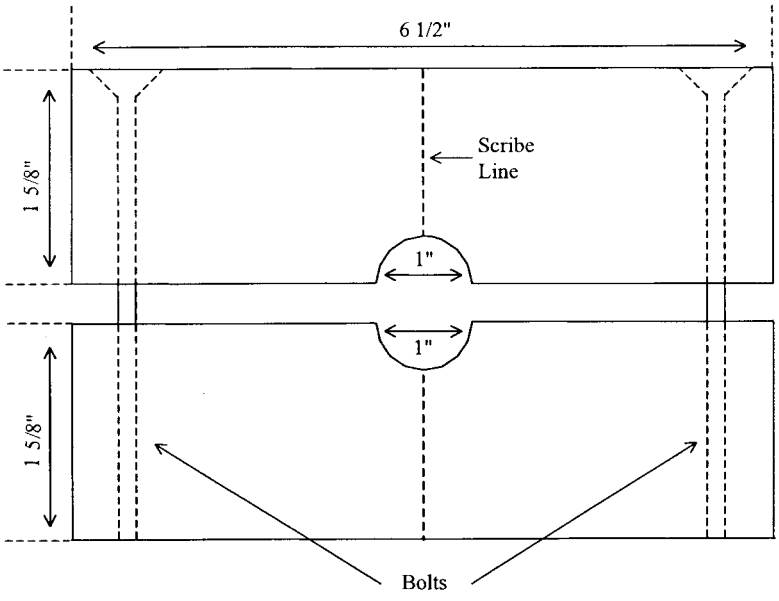

Figure 2G-4. Rotational position collar block.

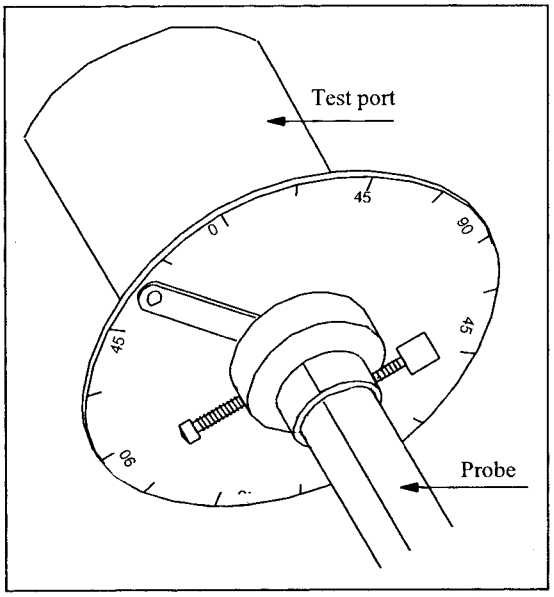

Figure 2G-5. Yaw angle protractor wheel and pointer.

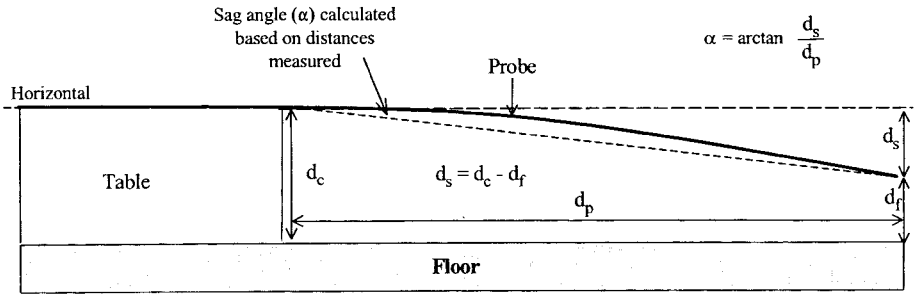

Figure 2G-6. Elements in horizontal straightness test based on trigonometry.

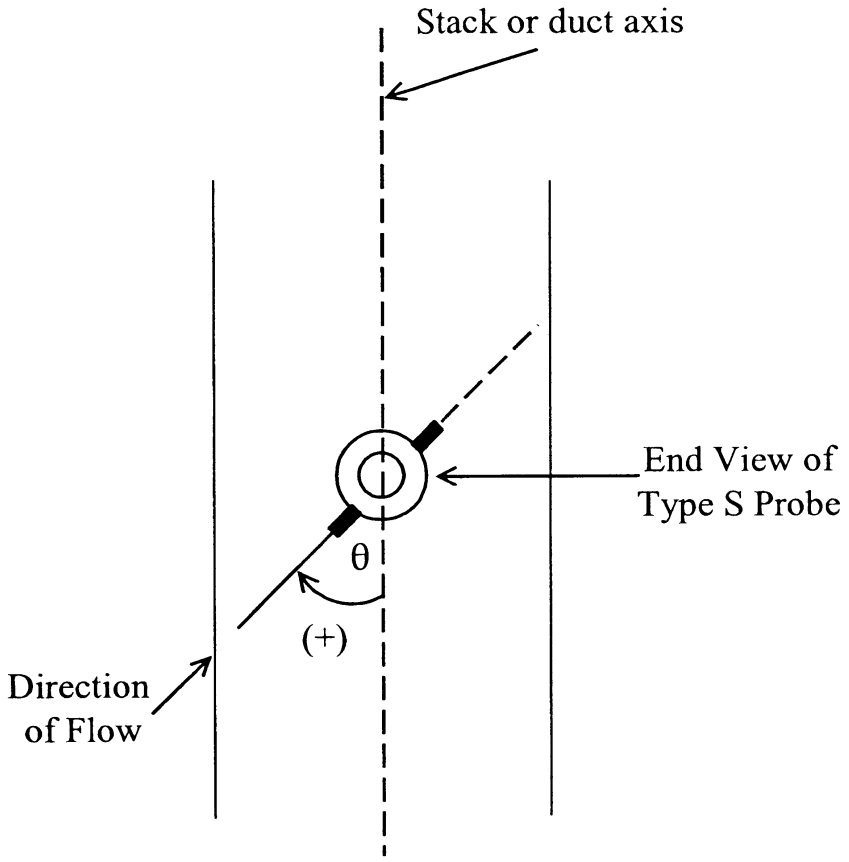

Figure 2G-7. Sign convention for the measured angle (θ) when the probe impact port is pointed directly into the flow. The angle θ is positive when the probe's impact pressure port is oriented in a clockwise rotational position relative to the stack or duct axis, as shown above, and negative for a counter-clockwise orientation.

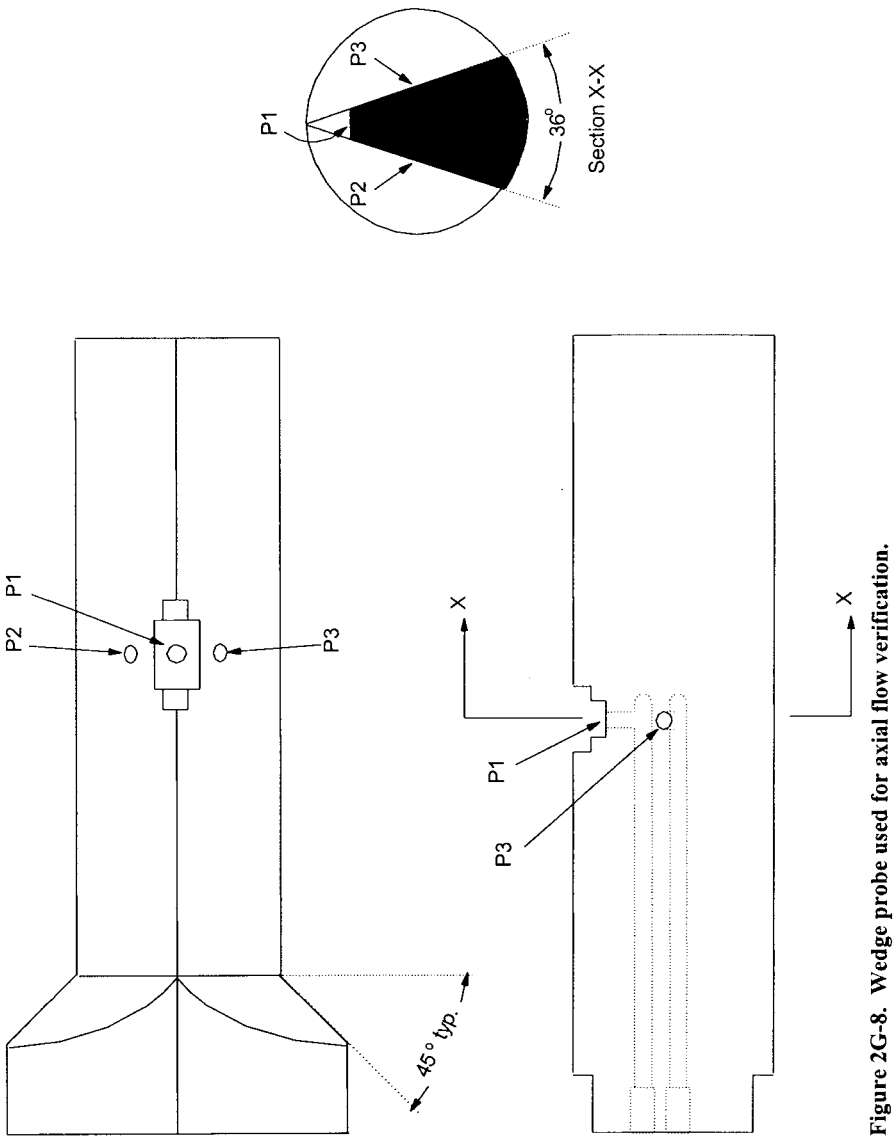

Figure 2G-8. Wedge probe used for axial flow verification.

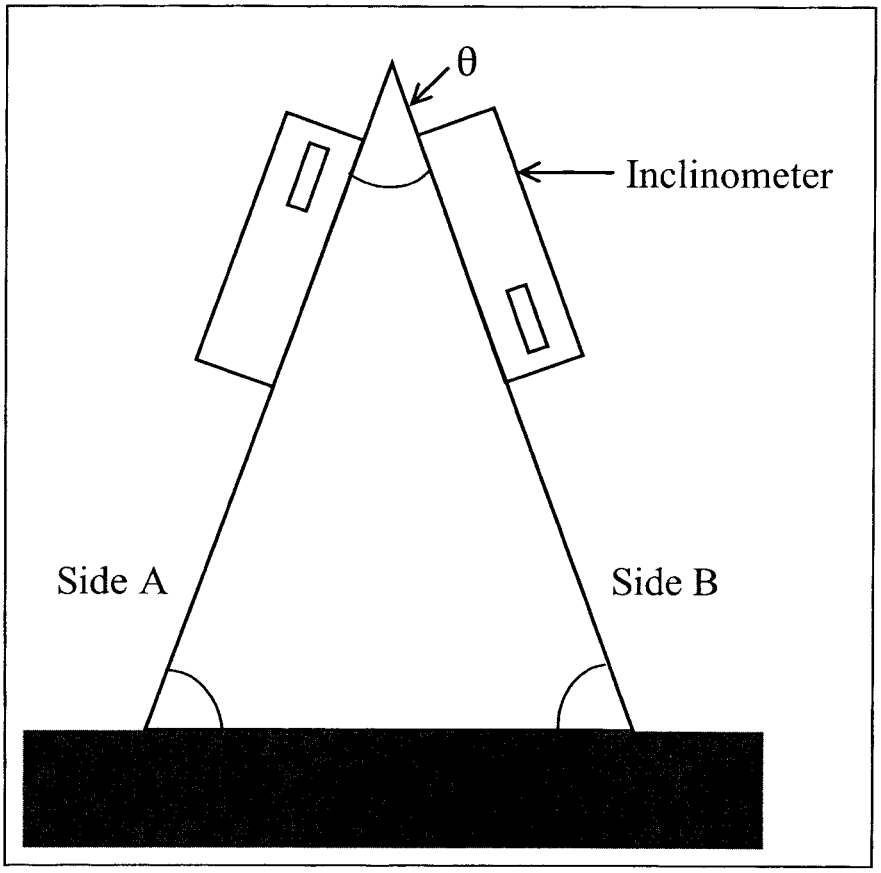

Figure 2G-9. Triangular block used for digital inclinometer calibration.

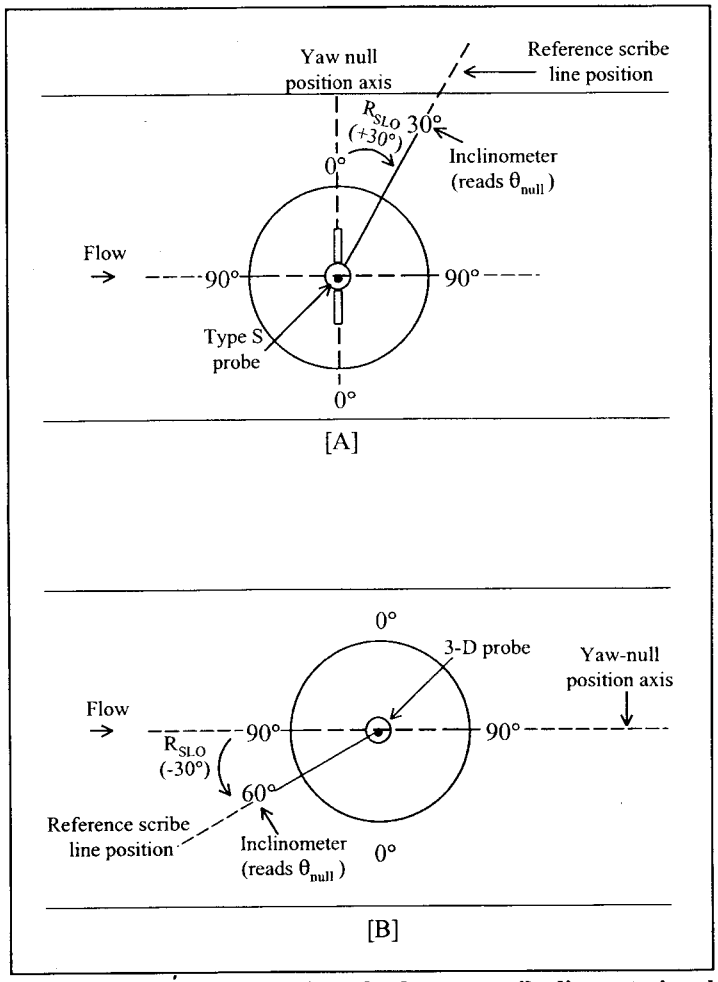

Figure 2G-10. Determination of reference scribe line rotational offset (R_{SLO}) in a horizontal wind tunnel with axial flow for: [A], a Type S probe, and [B], a 3-D probe. In [A] and [B], the probe impact pressure port is aligned with the yaw-null position axis and the inclinometer reads θ_{null}. In [A], the magnitude of R_{SLO} = θ_{null} and the sign is positive (clockwise from yaw-null position axis). In [B], the magnitude of $R_{SLO} = 90° - \theta_{null}$ and the sign is negative (counterclockwise from yaw-null position axis).

Table 2G-1. Type S Probe Inspection Sheet

Note: Method 2 provides the criteria for an acceptably constructed Type S pitot tube. However, the procedure for making the necessary measurements is not specified. One approach is given below.

1. Use a vise with parallel and perpendicular faces. Use an angle-measuring device (analog or digital) for this check.
2. Place the pitot tube in the vise, and level the pitot tube horizontally using the angle-measuring device.
3. Place the angle-measuring device as shown below.
4. Measure distance A, which is P_A plus P_B. Method 2 specifies that $P_A = P_B$, but provides no tolerance for this measurement. Because this measurement is very difficult, it is suggested that $P_A = P_B = A/2$.
5. Measure the external tube diameter (D_t) with a micrometer, machinist's rule, or internal caliper.
6. Record all data as shown on the form below.
7. Calculate dimensions w and z as shown below.

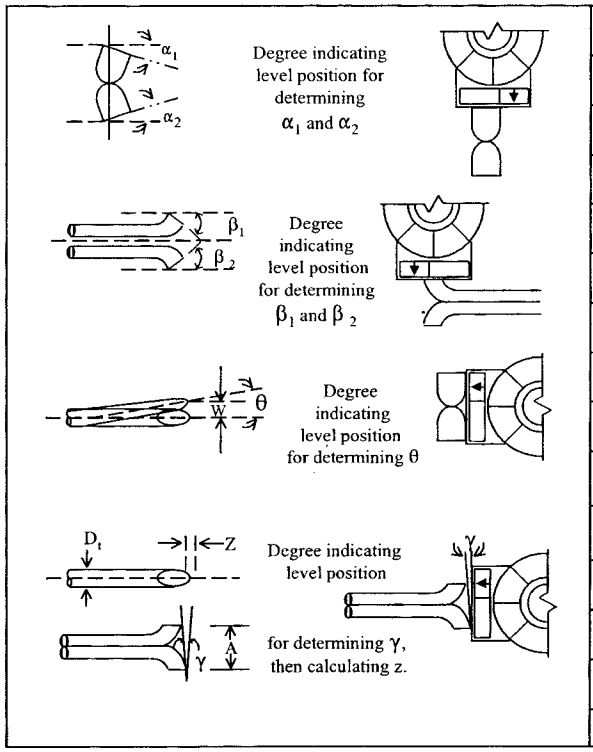

Level and perpendicular?	
Obstruction?	
Damaged?	
α_1 $(-2° \le \alpha_1 \le +2°)$	
α_2 $(-2° \le \alpha_2 \le +2°)$	
β_1 $(-2° \le \beta_1 \le +2°)$	
β_2 $(-2° \le \beta_2 \le +2°)$	
γ	
θ	
$z = A (\tan\gamma)$ [≤ 0.5 mm (0.02 in.)]	
$w = A (\tan\theta)$ [≤ 0.5 mm (0.02 in.)]	
D_t [≥ 9.5 mm (3/8 in.)]	
A	
$A/2D_t$ $(1.05 \le P_A/D_t \le 1.5)$ *	
* Recommended dimensions	

QA/QC Check

Completeness_____ Legibility_____ Accuracy_____

Specifications_____ Reasonableness_____

Certification

I certify that the Type S probe ID _____ meets or exceeds all specifications, criteria, and applicable design features.

Certified by:_____ Date:_____

Table 2G-2. Rotational Position Check

Source:_____ Date:_____

Test Location:_____ Tester(s):_____

Probe Type:_____ Affiliation:_____

Probe ID:_____ Fully-Assembled Probe Length in mm (in.):_____

Position	Angle Comparisons		
Distance of 2nd measurement device from probe head impact port in mm (in.)	1st Device Angle measured by device aligned on the reference scribe line, including algebraic sign (degrees)	2nd Device Angle measured by device mounted at each position to be used during testing, including algebraic sign (degrees)	R_{ADO} Difference between readings by 1st and 2nd angle-measuring devices (degrees)[a]
(Col. A)	(Col. B)	(Col. C)	(Col. C - Col. B)

[a] The algebraic sign must be consistent with section 8.3.2.

Specifications: For the pre-test rotational position check, the value of R_{ADO} at each location along the probe shaft must be determined to within ±1°. In the post-test check, R_{ADO} at each location must remain within ±2° of the value obtained in the pre-test check.

Table 2G-3. Example EPA Method 2G Field Data Form

Source: _____ Date: _____

Source Location: _____ Test Personnel: _____

Measurement Location: _____ Probe Type: _____

Run ID:	
Start Time:	
End Time:	
Pitot Tube ID:	
Pitot Tube Coefficient (C_p):	
Pressure Gauge ID:	
Pressure Gauge Readability:	in. H_2O
Temperature Gauge ID:	
Measurement System Response Time	sec.

Stack Diameter:		
Stack Area:		
Barometric Pressure (P_{bar}):		in. Hg
Static Pressure (P_g):		in. H_2O
$R_{SI.O}$		
R_{ADO}		
	Pre-test	Post-test
Pitot Tube Condition: Damage Noted?		
Leak Check Performed?		

Clock Time	Traverse Point	Yaw Angle, including algebraic sign (degrees)	Differential Pressure (Δ P)	Stack or Duct Gas Temperature (° F)

Table 2G-4. Wind Tunnel Velocity Pressure Cross-Check

Wind Tunnel Facility: _____
Date: _____
Wind Tunnel Temperature: _____
Barometric Pressure: _____
Test Point Locations: _____
Lowest Test Velocity in m/sec (ft/sec): _____
Highest Test Velocity in m/sec (ft/sec): _____

Port		Rep.	Velocity Pressure (ΔP_{std})	
			@ Lowest Test Velocity	@ Highest Test Velocity
Calibration Pitot Tube Location		1		
		2		
		3		
		Average		
Calibration Location Test Points *	1	1		
		2		
		3		
		Average		
		% Difference **		
	2	1		
		2		
		3		
		Average		
		% Difference **		
	..	1		
		2		
		3		
		Average		
		% Difference **		

* Measurements must be taken at all points in the calibration location as specified in section 10.1.1

** Percent Difference = $\frac{(Calibration\ Location\ Test\ Point\ Avg - Cal.\ Pitot\ Tube\ Location\ Avg)}{Cal.\ Pitot\ Tube\ Location\ Avg} \times 100\%$

Specification: At each velocity setting, the average velocity pressure obtained at the calibration location shall be within ±2 percent or 0.01 in. H_2O, whichever is less restrictive, of the average velocity pressure obtained at the fixed calibration pitot tube location.

Table 2G-5. Wind Tunnel Axial Flow Verification

Wind Tunnel Facility: _____
Date: _____
Wind Tunnel Temperature: _____
Barometric Pressure: _____
Probe Type/I.D. Used To Conduct Check: _____
Test Point Locations: _____
Lowest Test Velocity in m/sec (ft/sec): _____
Highest Test Velocity in m/sec (ft/sec): _____

Port		@ Lowest Test Velocity		@ Highest Test Velocity	
		Yaw Angle * (degrees)	Pitch Angle * (degrees)	Yaw Angle * (degrees)	Pitch Angle * (degrees)
Calibration Location Test Points **	1				
	2				
	3				
	..				
Calibration Pitot Tube Location					

* When following the procedures in section 10.1.2.1, both the yaw and pitch angles are obtained from the same port. When following the procedures in section 10.1.2.2, the yaw angle is obtained using the port for the tested probe, and the pitch angle is obtained using the port for verification of axial flow.

** Yaw and pitch angle measurements must be taken at all points that define the calibration location (as per the requirements in section 10.1.1)

Specification: At each velocity setting, each measured yaw and pitch angle shall be within ±3° of 0° in accordance with the requirements in section 10.1.2.

Table 2G-6. Yaw Angle Calibration

Probe Type: _____ **Tester(s):** _____

Probe ID: _____ **Affiliation:** _____

Test Location: _____ **Date:** _____

	Repetition 1		Repetition 2	
Nominal Velocity Setting in m/sec (ft/sec)	**θ_{null} (degrees)**	**R_{SLO} (degrees)***	**θ_{null} (degrees)**	**R_{SLO} (degrees)***

Average of all recorded R_{SLO} values: _____

* Include magnitude and algebraic sign in accordance with section 10.5.6.

Table 2G-7. Determining the Magnitude of Reference Scribe Line Offset

Probe/Angle-Measuring Device	Magnitude of R_{SLO}
Type S probe with inclinometer	θ_{null}
Type S probe with protractor wheel and pointer	$90° - \theta_{null}$
3-D probe with inclinometer	$90° - \theta_{null}$
3-D probe with protractor wheel and pointer	θ_{null}

Table 2G-8. Probe Calibration for Method 2G

Wind Tunnel Facility: _____
Wind Tunnel Location: _____
Probe Type: _____
Probe ID: _____
Probe Calibration Date: _____
Test Point Location: _____
Ambient Temperature (°F): _____
Barometric Pressure (P_{bar}): _____

Repetition	Low Velocity Setting (ft/sec)	Calibration Pitot		Tested Probe		Calculated C_p or F_2
		ΔP_{std} (in. H_2O)	Temp. (°F)	ΔP or P_1-P_2 (in. H_2O)	Yaw Angle (°)	
1						
2						
3						
Average ($C_{p(avg\text{-}low)}$) =						

Repetition	High Velocity Setting (ft/sec)	Calibration Pitot		Tested Probe		Calculated C_p or F_2
		ΔP_{std} (in. H_2O)	Temp. (°F)	ΔP or P_1-P_2 (in. H_2O)	Yaw Angle (°)	
1						
2						
3						
Average ($C_{p(avg\text{-}high)}$) =						

$$\% \text{ Difference} = \frac{C_{p(avg-low)} - C_{p(avg-high)}}{C_{p(avg-low)}} \times 100\% = \_\_\_\_\_\%$$

Note: (1) The percent difference between the low and high velocity setting C_p values shall be within ±3 percent.
(2) If calibrating a 3-D probe for this method, the pitch angle setting must be 0°.

METHOD 2H—DETERMINATION OF STACK GAS VELOCITY TAKING INTO ACCOUNT VELOCITY DECAY NEAR THE STACK WALL

1.0 Scope and Application

1.1 This method is applicable in conjunction with Methods 2, 2F, and 2G (40 CFR Part 60, Appendix A) to account for velocity decay near the wall in circular stacks and ducts.

1.2 This method is not applicable for testing stacks and ducts less than 3.3 ft (1.0 m) in diameter.

1.3 Data Quality Objectives. Adherence to the requirements of this method will enhance the quality of the data obtained from air pollutant sampling methods.

2.0 Summary of Method

2.1 A wall effects adjustment factor is determined. It is used to adjust the average stack gas velocity obtained under Method 2, 2F, or 2G of this appendix to take into account velocity decay near the stack or duct wall.

2.2 The method contains two possible procedures: a calculational approach which derives an adjustment factor from velocity measurements and a default procedure which assigns a generic adjustment factor based on the construction of the stack or duct.

2.2.1 The calculational procedure derives a wall effects adjustment factor from velocity measurements taken using Method 2, 2F, or 2G at 16 (or more) traverse points specified under Method 1 of this appendix and a total of eight (or more) wall effects traverse points specified under this method. The calculational procedure based on velocity measurements is not applicable for horizontal circular ducts where build-up of particulate matter or other material in the bottom of the duct is present.

2.2.2 A default wall effects adjustment factor of 0.9900 for brick and mortar stacks and 0.9950 for all other types of stacks and ducts may be used without taking wall effects measurements in a stack or duct.

2.3 When the calculational procedure is conducted as part of a relative accuracy test audit (RATA) or other multiple-run test procedure, the wall effects adjustment factor derived from a single traverse (i.e., single RATA run) may be applied to all runs of the same RATA without repeating the wall effects measurements. Alternatively, wall effects adjustment factors may be derived for several traverses and an average wall effects adjustment factor applied to all runs of the same RATA.

3.0 Definitions.

3.1 *Complete wall effects traverse* means a traverse in which measurements are taken at d_{rem} (see section 3.3) and at 1-in. intervals in each of the four Method 1 equal-area sectors closest to the wall, beginning not farther than 4 in. (10.2 cm) from the wall and extending either (1) across the entire width of the Method 1 equal-area sector or (2) for stacks or ducts where this width exceeds 12 in. (30.5 cm) (i.e., stacks or ducts greater than or equal to 15.6 ft [4.8 m] in diameter), to a distance of not less than 12 in. (30.5 cm) from the wall. Note: Because this method specifies that measurements must be taken at whole number multiples of 1 in. from a stack or duct wall, for clarity numerical quantities in this method are expressed in English units followed by metric units in parentheses. To enhance readability, hyphenated terms such as ''1-in. intervals'' or ''1-in. incremented,'' are expressed in English units only.

3.2 d_{last} Depending on context, d_{last} means either (1) the distance from the wall of the last 1-in. incremented wall effects traverse point or (2) the traverse point located at that distance (see Figure 2H–2).

3.3 d_{rem} Depending on context, d_{rem} means either (1) the distance from the wall of the centroid of the area between d_{last} and the interior edge of the Method 1 equal-area sector closest to the wall or (2) the traverse point located at that distance (see Figure 2H–2).

3.4 *''May,'' ''Must,'' ''Shall,'' ''Should,''* and the imperative form of verbs.

3.4.1 *''May''* is used to indicate that a provision of this method is optional.

3.4.2 *''Must,'' ''Shall,''* and the imperative form of verbs (such as ''record'' or ''enter'') are used to indicate that a provision of this method is mandatory.

3.4.3 *''Should''* is used to indicate that a provision of this method is not mandatory but is highly recommended as good practice.

3.5 *Method 1* refers to 40 CFR part 60, appendix A, ''Method 1—Sample and velocity traverses for stationary sources.''

3.6 *Method 1 exterior equal-area sector and Method 1 equal-area sector closest to the wall* mean any one of the four equal-area sectors that are closest to the wall for a circular stack or duct laid out in accordance with section 2.3.1 of Method 1 (see Figure 2H–1).

3.7 *Method 1 interior equal-area sector* means any of the equal-area sectors other than the Method 1 exterior equal-area sectors (as defined in section 3.6) for a circular stack or duct laid out in accordance with section 2.3.1 of Method 1 (see Figure 2H–1).

3.8 *Method 1 traverse point and Method 1 equal-area traverse point* mean a traverse point located at the centroid of an equal-area sector of a circular stack laid out in accordance with section 2.3.1 of Method 1.

3.9 *Method 2* refers to 40 CFR part 60, appendix A, ''Method 2—Determination of stack gas velocity and volumetric flow rate (Type S pitot tube).''

3.10 *Method 2F* refers to 40 CFR part 60, appendix A, ''Method 2F—Determination of stack gas velocity and volumetric flow rate with three-dimensional probes.''

3.11 *Method 2G* refers to 40 CFR part 60, appendix A, ''Method 2G—Determination of stack gas velocity and volumetric flow rate with two-dimensional probes.''

3.12 *1-in. incremented wall effects traverse point* means any of the wall effects traverse points that are located at 1-in. intervals, i.e., traverse points d_1 through d_{last} (see Figure 2H–2).

3.13 *Partial wall effects traverse* means a traverse in which measurements are taken at fewer than the number of traverse points required for a ''complete wall effects traverse'' (as defined in section 3.1), but are taken at a minimum of two traverse points in each Method 1 equal-area sector closest to the wall, as specified in section 8.2.2.

3.14 *Relative accuracy test audit (RATA)* is a field test procedure performed in a stack or duct in which a series of concurrent measurements of the same stack gas stream is taken by a reference method and an installed monitoring system. A RATA usually consists of series of 9 to 12 sets of such concurrent measurements, each of which is referred to as a RATA run. In a volumetric flow RATA, each reference method run consists of a complete traverse of the stack or duct.

3.15 *Wall effects-unadjusted average velocity* means the average stack gas velocity, not accounting for velocity decay near the wall, as determined in accordance with Method 2, 2F, or 2G for a Method 1 traverse consisting of 16 or more points.

3.16 *Wall effects-adjusted average velocity* means the average stack gas velocity, taking into account velocity decay near the wall, as calculated from measurements at 16 or more Method 1 traverse points and at the additional wall effects traverse points specified in this method.

3.17 *Wall effects traverse point* means a traverse point located in accordance with sections 8.2.2 or 8.2.3 of this method.

4.0 Interferences. [Reserved]

5.0 Safety

5.1 This method may involve hazardous materials, operations, and equipment. This method does not purport to address all of the health and safety considerations associated with its use. It is the responsibility of the user of this method to establish appropriate health and safety practices and to determine the applicability of occupational health and safety regulatory requirements prior to performing this method.

6.0 Equipment and Supplies

6.1 The provisions pertaining to equipment and supplies in the method that is used to take the traverse point measurements (i.e., Method 2, 2F, or 2G) are applicable under this method.

7.0 Reagents and Standards. [Reserved]

8.0 Sample Collection and Analysis

8.1 Default Wall Effects Adjustment Factors. A default wall effects adjustment factor of 0.9900 for brick and mortar stacks and 0.9950 for all other types of stacks and ducts may be used without conducting the following procedures.

8.2 Traverse Point Locations. Determine the location of the Method 1 traverse points in accordance with section 8.2.1 and the location of the traverse points for either a partial wall effects traverse in accordance with section 8.2.2 or a complete wall effects traverse in accordance with section 8.2.3.

8.2.1 Method 1 equal-area traverse point locations. Determine the location of the Method 1 equal-area traverse points for a traverse consisting of 16 or more points using Table 1–2 (Location of Traverse Points in Circular Stacks) of Method 1.

8.2.2 Partial wall effects traverse. For a partial wall effects traverse, measurements must be taken at a minimum of the following two wall effects traverse point locations in all four Method 1 equal-area sectors closest to the wall: (1) 1 in. (2.5 cm) from the wall (except as provided in section 8.2.2.1) and (2) d_{rem}, as determined using Equation 2H–1 or 2H–2 (see section 8.2.2.2).

8.2.2.1 If the probe cannot be positioned at 1 in. (2.5 cm) from the wall (e.g., because of insufficient room to withdraw the probe shaft) or if velocity pressure cannot be detected at 1 in. (2.5 cm) from the wall (for any reason other than build-up of particulate matter in the bottom of a duct), take measurements at the 1-in. incremented wall effects traverse point closest to the wall where the probe can be positioned and velocity pressure can be detected.

8.2.2.2 Calculate the distance of d_{rem} from the wall to within ±¼ in. (6.4 mm) using Equation 2H–1 or Equation 2H–2 (for a 16-point traverse).

$$d_{last} \leq d_b \qquad \text{Eq. 2H-3}$$

Where:

r = the stack or duct radius determined from direct measurement of the stack or duct diameter in accordance with section 8.6 of Method 2F or Method 2G, in. (cm);

p = the number of Method 1 equal-area traverse points on a diameter, $p \geq 8$ (e.g., for a 16-point traverse, p = 8); d_{last} and d_{rem} are defined in sections 3.2 and 3.3 respectively, in. (cm).

For a 16-point Method 1 traverse, Equation 2H–1 becomes:

$$d_{rem} = r - \sqrt{\frac{7}{8}r^2 - rd_{last} + \frac{1}{2}d_{last}^2} \qquad \text{Eq. 2H-2}$$

8.2.2.3 Measurements may be taken at any number of additional wall effects traverse points, with the following provisions.

(a) d_{last} must not be closer to the center of the stack or duct than the distance of the interior edge (boundary), d_b, of the Method 1 equal-area sector closest to the wall (see Figure 2H–2 or 2H–3). That is,

Where:

$$d_b = r\left(1 - \sqrt{1 - \frac{2}{p}}\right) \qquad \text{Eq. 2H-4}$$

Table 2H–1 shows d_b as a function of the stack or duct radius, r, for traverses ranging from 16 to 48 points (i.e., for values of p ranging from 8 to 24).

(b) Each point must be located at a distance that is a whole number (e.g., 1, 2, 3) multiple of 1 in. (2.5 cm).

(c) Points do not have to be located at consecutive 1-in. intervals. That is, one or more 1-in. incremented points may be skipped. For example, it would be acceptable for points to be located at 1 in. (2.5 cm), 3 in. (7.6 cm), 5 in. (12.7 cm), d_{last}, and d_{rem}; or at 1 in. (2.5 cm), 2 in. (5.1 cm), 4 in. (10.2 cm), 7 in. (17.8 cm), d_{last}, and d_{rem}. Follow the instructions in section 8.7.1.2 of this method for recording results for wall effects traverse points that are skipped. It should be noted that the full extent of velocity decay may not be accounted for if measurements are not taken at all 1-in. incremented points close to the wall.

8.2.3 Complete wall effects traverse. For a complete wall effects traverse, measurements must be taken at the following points in all four Method 1 equal-area sectors closest to the wall.

(a) The 1-in. incremented wall effects traverse point closest to the wall where the probe can be positioned and velocity can be detected, but no farther than 4 in. (10.2 cm) from the wall.

(b) Every subsequent 1-in. incremented wall effects traverse point out to the interior edge of the Method 1 equal-area sector or to 12 in. (30.5 cm) from the wall, whichever comes first. Note: In stacks or ducts with diameters greater than 15.6 ft (4.8 m) the interior edge of the Method 1 equal-area sector is farther from the wall than 12 in. (30.5 cm).

(c) d_{rem}, as determined using Equation 2H–1 or 2H–2 (as applicable). Note: For a complete traverse of a stack or duct with a diameter less than 16.5 ft (5.0 m), the distance between d_{rem} and d_{last} is less than or equal to ½ in. (12.7 mm). As discussed in section 8.2.4.2, when the distance between d_{rem} and d_{last} is less than or equal to ½ in. (12.7 mm), the velocity measured at d_{last} may be used for d_{rem}. Thus, it is not necessary to calculate the distance of d_{rem} or to take measurements at d_{rem} when conducting a complete traverse of a stack or duct with a diameter less than 16.5 ft (5.0 m).

8.2.4 Special considerations. The following special considerations apply when the distance between traverse points is less than or equal to ½ in. (12.7 mm).

8.2.4.1 A wall effects traverse point and the Method 1 traverse point. If the distance between a wall effects traverse point and the Method 1 traverse point is less than or equal to ½ in. (12.7 mm), taking measurements at

both points is allowed but not required or recommended; if measurements are taken at only one point, take the measurements at the point that is farther from the wall and use the velocity obtained at that point as the value for both points (see sections 8.2.3 and 9.2 for related requirements).

8.2.4.2 d_{rem} and d_{last}. If the distance between d_{rem} and d_{last} is less than or equal to ½ in. (12.7 mm), taking measurements at d_{rem} is allowed but not required or recommended; if measurements are not taken at d_{rem}, the measured velocity value at d_{last} must be used as the value for both d_{last} and d_{rem}.

8.3 Traverse Point Sampling Order and Probe Selection. Determine the sampling order of the Method 1 and wall effects traverse points and select the appropriate probe for the measurements, taking into account the following considerations.

8.3.1 Traverse points on any radius may be sampled in either direction (i.e., from the wall toward the center of the stack or duct, or vice versa).

8.3.2 To reduce the likelihood of velocity variations during the time of the traverse and the attendant potential impact on the wall effects-adjusted and unadjusted average velocities, the following provisions of this method shall be met.

8.3.2.1 Each complete set of Method 1 and wall effects traverse points accessed from the same port shall be sampled without interruption. Unless traverses are performed simultaneously in all ports using separate probes at each port, this provision disallows first sampling all Method 1 points at all ports and then sampling all the wall effects points.

8.3.2.2 The entire integrated Method 1 and wall effects traverse across all test ports shall be as short as practicable, consistent with the measurement system response time (see section 8.4.1.1) and sampling (see section 8.4.1.2) provisions of this method.

8.3.3 It is recommended but not required that in each Method 1 equal-area sector closest to the wall, the Method 1 equal-area traverse point should be sampled in sequence between the adjacent wall effects traverse points. For example, for the traverse point configuration shown in Figure 2H–2, it is recommended that the Method 1 equal-area traverse point be sampled between d_{last} and d_{rem}. In this example, if the traverse is conducted from the wall toward the center of the stack or duct, it is recommended that measurements be taken at points in the following order: d_1, d_2, d_{last}, the Method 1 traverse point, d_{rem}, and then at the traverse points in the three Method 1 interior equal-area sectors.

8.3.4 The same type of probe must be used to take measurements at all Method 1 and wall effects traverse points. However, different copies of the same type of probe may be used at different ports (e.g., Type S probe 1 at port A, Type S probe 2 at port B) or at different traverse points accessed from a particular port (e.g., Type S probe 1 for Method 1 interior traverse points accessed from port A, Type S probe 2 for wall effects traverse points and the Method 1 exterior traverse point accessed from port A). The identification number of the probe used to obtain measurements at each traverse point must be recorded.

8.4 Measurements at Method 1 and Wall Effects Traverse Points. Conduct measurements at Method 1 and wall effects traverse points in accordance with Method 2, 2F, or 2G and in accordance with the provisions of the following subsections (some of which are included in Methods 2F and 2G but not in Method 2), which are particularly important for wall effects testing.

8.4.1 Probe residence time at wall effects traverse points. Due to the steep temperature and pressure gradients that can occur close to the wall, it is very important for the probe residence time (i.e., the total time spent at a traverse point) to be long enough to ensure collection of representative temperature and pressure measurements. The provisions of Methods 2F and 2G in the following subsections shall be observed.

8.4.1.1 System response time. Determine the response time of each probe measurement system by inserting and positioning the ''cold'' probe (at ambient temperature and pressure) at any Method 1 traverse point. Read and record the probe differential pressure, temperature, and elapsed time at 15-second intervals until stable readings for both pressure and temperature are achieved. The response time is the longer of these two elapsed times. Record the response time.

8.4.1.2 Sampling. At the start of testing in each port (i.e., after a probe has been inserted into the stack gas stream), allow at least the response time to elapse before beginning to take measurements at the first traverse point accessed from that port. Provided that the probe is not removed from the stack gas stream, measurements may be taken at subsequent traverse points accessed from the same test port without waiting again for the response time to elapse.

8.4.2 Temperature measurement for wall effects traverse points. Either (1) take temperature measurements at each wall effects traverse point in accordance with the applicable provisions of Method 2, 2F, or 2G; or (2) use the temperature measurement at the Method 1 traverse point closest to the wall as the temperature measurement for all the wall effects traverse points in the corresponding equal-area sector.

8.4.3 Non-detectable velocity pressure at wall effects traverse points. If the probe cannot be positioned at a wall effects traverse point or if no velocity pressure can be detected at a wall effects point, measurements shall be taken at the first subsequent wall

effects traverse point farther from the wall where velocity can be detected. Follow the instructions in section 8.7.1.2 of this method for recording results for wall effects traverse points where velocity pressure cannot be detected. It should be noted that the full extent of velocity decay may not be accounted for if measurements are not taken at the 1-in. incremented wall effects traverse points closest to the wall.

8.5 Data Recording. For each wall effects and Method 1 traverse point where measurements are taken, record all pressure, temperature, and attendant measurements prescribed in section 3 of Method 2 or section 8.0 of Method 2F or 2G, as applicable.

8.6 Point Velocity Calculation. For each wall effects and Method 1 traverse point, calculate the point velocity value (v_i) in accordance with sections 12.1 and 12.2 of Method 2F for tests using Method 2F and in accordance with sections 12.1 and 12.2 of Method 2G for tests using Method 2 and Method 2G. (Note that the term (v_i) in this method corresponds to the term ($v_{a(i)}$) in Methods 2F and 2G.) When the equations in the indicated sections of Method 2G are used in deriving point velocity values for Method 2 tests, set the value of the yaw angles appearing in the equations to 0°.

8.7 Tabulating Calculated Point Velocity Values for Wall Effects Traverse Points. Enter the following values in a hardcopy or electronic form similar to Form 2H–1 (for 16-point Method 1 traverses) or Form 2H–2 (for Method 1 traverses consisting of more than 16 points). A separate form must be completed for each of the four Method 1 equal-area sectors that are closest to the wall.

(a) Port ID (e.g., A, B, C, or D)

(b) Probe type

(c) Probe ID

(d) Stack or duct diameter in ft (m) (determined in accordance with section 8.6 of Method 2F or Method 2G)

(e) Stack or duct radius in in. (cm)

(f) Distance from the wall of wall effects traverse points at 1-in. intervals, in ascending order starting with 1 in. (2.5 cm) (column A of Form 2H–1 or 2H–2)

(g) Point velocity values (v_d) for 1-in. incremented traverse points (see section 8.7.1), including d_{last} (see section 8.7.2)

(h) Point velocity value (v_{drem}) at d_{rem} (see section 8.7.3).

8.7.1 Point velocity values at wall effects traverse points other than d_{last}. For every 1-in. incremented wall effects traverse point other than d_{last}, enter in column B of Form 2H–1 or 2H–2 either the velocity measured at the point (see section 8.7.1.1) or the velocity measured at the first subsequent traverse point farther from the wall (see section 8.7.1.2). A velocity value must be entered in column B of Form 2H–1 or 2H–2 for every 1-in. incremented traverse point from d_1 (representing the wall effects traverse point 1 in. [2.5 cm] from the wall) to d_{last}.

8.7.1.1 For wall effects traverse points where the probe can be positioned and velocity pressure can be detected, enter the value obtained in accordance with section 8.6.

8.7.1.2 For wall effects traverse points that were skipped [see section 8.2.2.3(c)] and for points where the probe cannot be positioned or where no velocity pressure can be detected, enter the value obtained at the first subsequent traverse point farther from the wall where velocity pressure was detected and measured and follow the entered value with a ''flag,'' such as the notation ''NM,'' to indicate that ''no measurements'' were actually taken at this point.

8.7.2 Point velocity value at d_{last}. For d_{last}, enter in column B of Form 2H–1 or 2H–2 the measured value obtained in accordance with section 8.6.

8.7.3 Point velocity value (v_{drem}) at d_{rem}. Enter the point velocity value obtained at d_{rem} in column G of row 4a in Form 2H–1 or 2H–2. If the distance between d_{rem} and d_{last} is less than or equal to ½ in. (12.7 mm), the measured velocity value at d_{last} may be used as the value at d_{rem} (see section 8.2.4.2).

9.0 Quality Control.

9.1 Particulate Matter Build-up in Horizontal Ducts. Wall effects testing of horizontal circular ducts should be conducted only if build-up of particulate matter or other material in the bottom of the duct is not present.

9.2 Verifying Traverse Point Distances. In taking measurements at wall effects traverse points, it is very important for the probe impact pressure port to be positioned as close as practicable to the traverse point locations in the gas stream. For this reason, before beginning wall effects testing, it is important to calculate and record the traverse point positions that will be marked on each probe for each port, taking into account the distance that each port nipple (or probe mounting flange for automated probes) extends out of the stack and any extension of the port nipple (or mounting flange) into the gas stream. To ensure that traverse point positions are properly identified, the following procedures should be performed on each probe used.

9.2.1 Manual probes. Mark the probe insertion distance of the wall effects and Method 1 traverse points on the probe sheath so that when a mark is aligned with the outside face of the stack port, the probe impact port is located at the calculated distance of the traverse point from the stack inside wall. The use of different colored marks is recommended for designating the wall effects and Method 1 traverse points. Before the first use of each probe, check to ensure that the distance of each mark from the center of the probe impact pressure port agrees with

the previously calculated traverse point positions to within ±¼ in. (6.4 mm).

9.2.2 Automated probe systems. For automated probe systems that mechanically position the probe head at prescribed traverse point positions, activate the system with the probe assemblies removed from the test ports and sequentially extend the probes to the programmed location of each wall effects traverse point and the Method 1 traverse points. Measure the distance between the center of the probe impact pressure port and the inside of the probe assembly mounting flange for each traverse point. The measured distances must agree with the previously calculated traverse point positions to within ±¼ in. (6.4 mm).

9.3 Probe Installation. Properly sealing the port area is particularly important in taking measurements at wall effects traverse points. For testing involving manual probes, the area between the probe sheath and the port should be sealed with a tightly fitting flexible seal made of an appropriate material such as heavy cloth so that leakage is minimized. For automated probe systems, the probe assembly mounting flange area should be checked to verify that there is no leakage.

9.4 Velocity Stability. This method should be performed only when the average gas velocity in the stack or duct is relatively constant over the duration of the test. If the average gas velocity changes significantly during the course of a wall effects test, the test results should be discarded.

10.0 Calibration

10.1 The calibration coefficient(s) or curves obtained under Method 2, 2F, or 2G and used to perform the Method 1 traverse are applicable under this method.

11.0 Analytical Procedure

11.1 Sample collection and analysis are concurrent for this method (see section 8).

12.0 Data Analysis and Calculations

12.1 The following calculations shall be performed to obtain a wall effects adjustment factor (*WAF*) from (1) the wall effects-unadjusted average velocity (*T4avg*), (2) the replacement velocity (ve_j) for each of the four Method 1 sectors closest to the wall, and (3) the average stack gas velocity that accounts for velocity decay near the wall (v_{avg}).

12.2 Nomenclature. The following terms are listed in the order in which they appear in Equations 2H–5 through 2H–21.

v_{avg}=the average stack gas velocity, unadjusted for wall effects, actual ft/sec (m/sec);

vi_i=stack gas point velocity value at Method 1 interior equal-area sectors, actual ft/sec (m/sec);

ve_j=stack gas point velocity value, unadjusted for wall effects, at Method 1 exterior equal-area sectors, actual ft/sec (m/sec);

i=index of Method 1 interior equal-area traverse points;

j=index of Method 1 exterior equal-area traverse points;

n=total number of traverse points in the Method 1 traverse;

$vdec_d$=the wall effects decay velocity for a sub-sector located between the traverse points at distances $d-1$ (in metric units, $d-2.5$) and d from the wall, actual ft/sec (m/sec);

v_d=the measured stack gas velocity at distance d from the wall, actual ft/sec (m/sec); Note: v_0=0;

d=the distance of a 1-in. incremented wall effects traverse point from the wall, for traverse points d_1 through $d_{last,}$ in. (cm);

A_d=the cross-sectional area of a sub-sector located between the traverse points at distances $d-1$ (in metric units, $d-2.5$) and d from the wall, in.^{2} (cm^2) (e.g., sub-sector A_2 shown in Figures 2H–3 and 2H–4);

r=the stack or duct radius, in. (cm);

Q_d=the stack gas volumetric flow rate for a sub-sector located between the traverse points at distances $d-1$ (in metric units, $d-2.5$) and d from the wall, actual ft-in.^{2}/sec (m-cm^2/sec);

$Q_{d_1 \rightarrow d_{last}}$= the total stack gas volumetric flow rate for all sub-sectors located between the wall and $d_{last,}$ actual ft-in.^{2}/sec (m-cm^2/sec);

d_{last}=the distance from the wall of the last 1-in. incremented wall effects traverse point, in. (cm);

A_{drem}=the cross-sectional area of the sub-sector located between d_{last} and the interior edge of the Method 1 equal-area sector closest to the wall, in.^{2} (cm^2) (see Figure 2H–4);

p=the number of Method 1 traverse points per diameter, $p \geq 8$ (e.g., for a 16-point traverse, p=8);

d_{rem}=the distance from the wall of the centroid of the area between d_{last} and the interior edge of the Method 1 equal-area sector closest to the wall, in. (cm);

Q_{drem}=the total stack gas volumetric flow rate for the sub-sector located between d_{last} and the interior edge of the Method 1 equal-area sector closest to the wall, actual ft-in.^{2}/sec (m-cm^2/sec);

v_{drem}=the measured stack gas velocity at distance d_{rem} from the wall, actual ft/sec (m/sec);

Q_T=the total stack gas volumetric flow rate for the Method 1 equal-area sector closest to the wall, actual ft-in.^{2}/sec (m-cm^2/sec);

ve_j=the replacement stack gas velocity for the Method 1 equal-area sector closest to the wall, i.e., the stack gas point velocity value, adjusted for wall effects, for the jth Method 1 equal-area sector closest to the wall, actual ft/sec (m/sec);

$\hat{v}_{avg}$=the average stack gas velocity that accounts for velocity decay near the wall, actual ft/sec (m/sec);

WAF=the wall effects adjustment factor derived from v_{avg} and $\hat{v}_{avg}$ for a single traverse, dimensionless;

v_{final}=the final wall effects-adjusted average stack gas velocity that replaces the unadjusted average stack gas velocity obtained using Method 2, 2F, or 2G for a field test consisting of a single traverse, actual ft/sec (m/sec);

WAF=the wall effects adjustment factor that is applied to the average velocity, unadjusted for wall effects, in order to obtain the final wall effects-adjusted stack gas velocity, v_{final} or, $v_{final(k)}$, dimensionless;

$v_{final(k)}$=the final wall effects-adjusted average stack gas velocity that replaces the unadjusted average stack gas velocity obtained using Method 2, 2F, or 2G on run *k* of a RATA or other multiple-run field test procedure, actual ft/sec (m/sec);

$v_{avg(k)}$=the average stack gas velocity, obtained on run *k* of a RATA or other multiple-run procedure, unadjusted for velocity decay near the wall, actual ft/sec (m/sec);

k=index of runs in a RATA or other multiple-run procedure.

12.3 Calculate the average stack gas velocity that does not account for velocity decay near the wall (v_{avg}) using Equation 2H–5.

$$v_{avg} = \frac{\left(\sum_{i=1}^{n-4} vi_i + \sum_{j=1}^{4} ve_j\right)}{n} \qquad \text{Eq. 2H-5}$$

(Note that v_{avg} in Equation 2H–5 is the same as $v_{(a)avg}$ in Equations 2F–9 and 2G–8 in Methods 2F and 2G, respectively.)

For a 16-point traverse, Equation 2H–5 may be written as follows:

$$v_{avg} = \frac{\left(\sum_{i=1}^{12} vi_i + \sum_{j=1}^{4} ve_j\right)}{16} \qquad \text{Eq. 2H-6}$$

12.4 Calculate the replacement velocity, ve_j, for each of the four Method 1 equal-area sectors closest to the wall using the procedures described in sections 12.4.1 through 12.4.8. Forms 2H–1 and 2H–2 provide sample tables that may be used in either hardcopy or spreadsheet format to perform the calculations described in sections 12.4.1 through 12.4.8. Forms 2H–3 and 2H–4 provide examples of Form 2H–1 filled in for partial and complete wall effects traverses.

12.4.1 Calculate the average velocity (designated the ''decay velocity,'' $vdec_d$) for each sub-sector located between the wall and d_{last} (see Figure 2H–3) using Equation 2H–7.

$$vdec_d = \frac{v_{d-1} + v_d}{2} \qquad \text{Eq. 2H-7}$$

For each line in column A of Form 2H–1 or 2H–2 that contains a value of d, enter the corresponding calculated value of $vdec_d$ in column C.

12.4.2 Calculate the cross-sectional area between the wall and the first 1-in. incremented wall effects traverse point and between successive 1-in. incremented wall effects traverse points, from the wall to d_{last} (see Figure 2H–3), using Equation 2H–8.

$$A_d = \frac{1}{4}\pi(r-d+1)^2 - \frac{1}{4}\pi(r-d)^2 \qquad \text{Eq. 2H-8}$$

For each line in column A of Form 2H–1 or 2H–2 that contains a value of d, enter the value of the expression ¼ $\pi(r-d+1)^2$ in column D, the value of the expression ¼ $\pi(r-d)^2$ in column E, and the value of A_d in column F. Note that Equation 2H–8 is designed for use only with English units (in.). If metric units (cm) are used, the first term, ¼ $\pi(r-d+1)^2$, must be changed to ¼ $\pi(r-d+2.5)^2$. This change must also be made in column D of Form 2H–1 or 2H–2.

12.4.3 Calculate the volumetric flow through each cross-sectional area derived in section 12.4.2 by multiplying the values of $vdec_d$, derived according to section 12.4.1, by the cross-sectional areas derived in section 12.4.2 using Equation 2H–9.

$$Q_d = vdec_d \times A_d \qquad \text{Eq. 2H-9}$$

For each line in column A of Form 2H–1 or 2H–2 that contains a value of *d*, enter the corresponding calculated value of Q_d in column G.

12.4.4 Calculate the total volumetric flow through all sub-sectors located between the wall and d_{last}, using Equation 2H–10.

$$Q_{d_1 \rightarrow d_{last}} = \sum_{d=1}^{d_{last}} Q_d \qquad \text{Eq. 2H-10}$$

Enter the calculated value of $Q_{d_1 \rightarrow d_{last}}$ in line 3 of column G of Form 2H–1 or 2H–2.

12.4.5 Calculate the cross-sectional area of the sub-sector located between d_{last} and the interior edge of the Method 1 equal-area sector (e.g., sub-sector A_{drem} shown in Figures 2H–3 and 2H–4) using Equation 2H–11.

$$A_{drem} = \frac{1}{4}\pi\left(r - d_{last}\right)^2 - \frac{p-2}{4p}\pi(r)^2 \qquad \text{Eq. 2H-11}$$

For a 16-point traverse (eight points per diameter), Equation 2H–11 may be written as follows:

$$A_{drem} = \frac{1}{4}\pi\left(r - d_{last}\right)^2 - \frac{3}{16}\pi(r)^2 \qquad \text{Eq. 2H-12}$$

Enter the calculated value of A_{drem} in line 4b of column G of Form 2H–1 or 2H–2.

12.4.6 Calculate the volumetric flow for the sub-sector located between d_{last} and the interior edge of the Method 1 equal-area sector, using Equation 2H–13.

$$Q_{drem} = v_{drem} \times A_{drem} \qquad \text{Eq. 2H-13}$$

In Equation 2H–13, v_{drem} is either (1) the measured velocity value at d_{rem} or (2) the measured velocity at d_{last}, if the distance between d_{rem} and d_{last} is less than or equal to ½ in. (12.7 mm) and no velocity measurement is taken at d_{rem} (see section 8.2.4.2). Enter the calculated value of Q_{drem} in line 4c of column G of Form 2H–1 or 2H–2.

12.4.7 Calculate the total volumetric flow for the Method 1 equal-area sector closest to the wall, using Equation 2H–14.

$$Q_T = Q_{d_1 \rightarrow d_{last}} + Q_{drem} \qquad \text{Eq. 2H-14}$$

Enter the calculated value of Q_T in line 5a of column G of Form 2H–1 or 2H–2.

12.4.8 Calculate the wall effects-adjusted replacement velocity value for the Method 1 equal-area sector closest to the wall, using Equation 2H–15.

$$\hat{v}e_j = \frac{Q_T}{\frac{1}{2p}\pi(r)^2} \qquad \text{Eq. 2H-15}$$

For a 16-point traverse (eight points per diameter), Equation 2H–15 may be written as follows:

$$\hat{v}e_j = \frac{Q_T}{\frac{1}{16}\pi(r)^2} \qquad \text{Eq. 2H-16}$$

Enter the calculated value of $\hat{v}e_j$ in line 5B of column G of Form 2H–1 or 2H–2.

12.5 Calculate the wall effects-adjusted average velocity, v_{avg}, by replacing the four values of ve_j shown in Equation 2H–5 with the four wall effects-adjusted replacement velocity values, $\hat{v}e_j$, calculated according to section 12.4.8, using Equation 2H–17.

$$\hat{v}_{avg} = \frac{\left(\sum_{i=1}^{n-4} vi_i + \sum_{j=1}^{4} \hat{v}e_j\right)}{n} \qquad \text{Eq. 2H-17}$$

For a 16-point traverse, Equation 2H–17 may be written as follows:

$$\hat{v}_{avg} = \frac{\left(\sum_{i=1}^{12} vi_i + \sum_{j=1}^{4} \hat{v}e_j\right)}{16} \qquad \text{Eq. 2H-18}$$

12.6 Calculate the wall effects adjustment factor, WAF, using Equation 2H–19.

$$WAF = \frac{\hat{v}_{avg}}{v_{avg}} \qquad \text{Eq. 2H-19}$$

12.6.1 Partial wall effects traverse. If a partial wall effects traverse (see section 8.2.2) is conducted, the value obtained from Equation 2H–19 is acceptable and may be reported as the wall effects adjustment factor provided that the value is greater than or equal to 0.9800. If the value is less than 0.9800, it shall not be used and a wall effects adjustment factor of 0.9800 may be used instead.

12.6.2 Complete wall effects traverse. If a complete wall effects traverse (see section 8.2.3) is conducted, the value obtained from Equation 2H–19 is acceptable and may be reported as the wall effects adjustment factor provided that the value is greater than or equal to 0.9700. If the value is less than 0.9700, it shall not be used and a wall effects adjustment factor of 0.9700 may be used instead. If the wall effects adjustment factor for a particular stack or duct is less than 0.9700, the tester may (1) repeat the wall effects test, taking measurements at more Method 1 traverse points and (2) recalculate the wall effects adjustment factor from these measurements, in an attempt to obtain a wall effects adjustment factor that meets the 0.9700 specification and completely characterizes the wall effects.

12.7 Applying a Wall Effects Adjustment Factor. A default wall effects adjustment factor, as specified in section 8.1, or a calculated wall effects adjustment factor meeting the requirements of section 12.6.1 or 12.6.2 may be used to adjust the average stack gas velocity obtained using Methods 2, 2F, or 2G to take into account velocity decay near the wall of circular stacks or ducts. Default wall effects adjustment factors specified in section 8.1 and calculated wall effects adjustment factors that meet the requirements of section 12.6.1 and 12.6.2 are summarized in Table 2H–2.

12.7.1 Single-run tests. Calculate the final wall effects-adjusted average stack gas velocity for field tests consisting of a single traverse using Equation 2H–20.

$$\hat{v}_{final} = \overline{WAF} \times v_{avg} \qquad \text{Eq. 2H-20}$$

The wall effects adjustment factor, WAF, shown in Equation 2H–20, may be (1) a default wall effects adjustment factor, as specified in section 8.1, or (2) a calculated adjustment factor that meets the specifications in sections 12.6.1 or 12.6.2. If a calculated adjustment factor is used in Equation 2H–20, the factor must have been obtained during the same traverse in which v_{avg} was obtained.

12.7.2 RATA or other multiple run test procedure. Calculate the final wall effects-adjusted average stack gas velocity for any run *k* of a RATA or other multiple-run procedure using Equation 2H–21.

$$\hat{v}_{final(k)} = \overline{WAF} \times v_{avg(k)} \qquad \text{Eq. 2H-21}$$

The wall effects adjustment factor, WAF, shown in Equation 2H–21 may be (1) a default wall effects adjustment factor, as specified in section 8.1; (2) a calculated adjustment factor (meeting the specifications in sections 12.6.1 or 12.6.2) obtained from any single run of the RATA that includes run *k*; or (3) the arithmetic average of more than one WAF (each meeting the specifications in sections 12.6.1 or 12.6.2) obtained through wall effects testing conducted during several runs of the RATA that includes run *k*. If wall effects adjustment factors (meeting the specifications in sections 12.6.1 or 12.6.2) are determined for more than one RATA run, the arithmetic average of all of the resulting calculated wall effects adjustment factors must be used as the value of *WAF* and applied to all runs of that RATA. If a calculated, not a default, wall effects adjustment factor is used in Equation 2H–21, the average velocity unadjusted for wall effects, $v_{avg(k)}$ must be obtained from runs in which the number of Method 1 traverse points sampled does not exceed the number of Method 1 traverse points in the runs used to derive the wall effects adjustment factor, WAF, shown in Equation 2H–21.

12.8 Calculating Volumetric Flow Using Final Wall Effects-Adjusted Average Velocity Value. To obtain a stack gas flow rate that accounts for velocity decay near the wall of circular stacks or ducts, replace v_s in Equation 2–10 in Method 2, or $v_{a(avg)}$ in Equations 2F–10 and 2F–11 in Method 2F, or $v_{a(avg)}$ in Equations 2G–9 and 2G–10 in Method 2G with one of the following.

12.8.1 For single-run test procedures, use the final wall effects-adjusted average stack gas velocity, v_{final}, calculated according to Equation 2H–20.

12.8.2 For RATA and other multiple run test procedures, use the final wall effects-adjusted average stack gas velocity, $v_{final(k)}$, calculated according to Equation 2H–21.

13.0 Method Performance. [Reserved]

414.0 Pollution Prevention. [Reserved]

15.0 Waste Management. [Reserved]

16.0 Reporting

16.1 Field Test Reports. Field test reports shall be submitted to the Agency according to the applicable regulatory requirements. When Method 2H is performed in conjunction with Method 2, 2F, or 2G to derive a wall effects adjustment factor, a single consolidated Method 2H/2F (or 2H/2G) field test report should be prepared. At a minimum, the consolidated field test report should contain

(1) all of the general information, and data for Method 1 points, specified in section 16.0 of Method 2F (when Method 2H is used in conjunction with Method 2F) or section 16.0 of Method 2G (when Method 2H is used in conjunction with Method 2 or 2G) and (2) the additional general information, and data for Method 1 points and wall effects points, specified in this section (some of which are included in section 16.0 of Methods 2F and 2G and are repeated in this section to ensure complete reporting for wall effects testing).

16.1.1 Description of the source and site. The field test report should include the descriptive information specified in section 16.1.1 of Method 2F (when using Method 2F) or 2G (when using either Method 2 or 2G). It should also include a description of the stack or duct's construction material along with the diagram showing the dimensions of the stack or duct at the test port elevation prescribed in Methods 2F and 2G. The diagram should indicate the location of all wall effects traverse points where measurements were taken as well as the Method 1 traverse points. The diagram should provide a unique identification number for each wall effects and Method 1 traverse point, its distance from the wall, and its location relative to the probe entry ports.

16.1.2 Field test forms. The field test report should include a copy of Form 2H–1, 2H–2, or an equivalent for each Method 1 exterior equal-area sector.

16.1.3 Field test data. The field test report should include the following data for the Method 1 and wall effects traverse.

16.1.3.1 Data for each traverse point. The field test report should include the values specified in section 16.1.3.2 of Method 2F (when using Method 2F) or 2G (when using either Method 2 or 2G) for each Method 1 and wall effects traverse point. The provisions of section 8.4.2 of Method 2H apply to the temperature measurements reported for wall effects traverse points. For each wall effects and Method 1 traverse point, the following values should also be included in the field test report.

(a) Traverse point identification number for each Method 1 and wall effects traverse point.

(b) Probe type.

(c) Probe identification number.

(d) Probe velocity calibration coefficient (i.e., C_p when Method 2 or 2G is used; F_2 when Method 2F is used).

For each Method 1 traverse point in an exterior equal-area sector, the following additional value should be included.

(e) Calculated replacement velocity, ve_j, accounting for wall effects.

16.1.3.2 Data for each run. The values specified in section 16.1.3.3 of Method 2F (when using Method 2F) or 2G (when using either Method 2 or 2G) should be included in the field test report once for each run. The provisions of section 12.8 of Method 2H apply for calculating the reported gas volumetric flow rate. In addition, the following Method 2H run values should also be included in the field test report.

(a) Average velocity for run, accounting for wall effects, v_{avg}.

(b) Wall effects adjustment factor derived from a test run, WAF.

16.1.3.3 Data for a complete set of runs. The values specified in section 16.1.3.4 of Method 2F (when using Method 2F) or 2G (when using either Method 2 or 2G) should be included in the field test report once for each complete set of runs. In addition, the field test report should include the wall effects adjustment factor, *W*AF, that is applied in accordance with section 12.7.1 or 12.7.2 to obtain the final wall effects-adjusted average stack gas velocity v_{final} or $v_{final(k)}$.

16.1.4 Quality assurance and control. Quality assurance and control procedures, specifically tailored to wall effects testing, should be described.

16.2 Reporting a Default Wall Effects Adjustment Factor. When a default wall effects adjustment factor is used in accordance with section 8.1 of this method, its value and a description of the stack or duct's construction material should be reported in lieu of submitting a test report.

17.0 *References.*

(1) 40 CFR Part 60, Appendix A, Method 1'Sample and velocity traverses for stationary sources.

(2) 40 CFR Part 60, Appendix A, Method 2'Determination of stack gas velocity and volumetric flow rate (Type S pitot tube).

(3) 40 CFR Part 60, Appendix A, Method 2F'Determination of stack gas velocity and volumetric flow rate with three-dimensional probes.

(4) 40 CFR Part 60, Appendix A, Method 2G'Determination of stack gas velocity and volumetric flow rate with two-dimensional probes.

(5) 40 CFR Part 60, Appendix A, Method 3'Gas analysis for carbon dioxide, oxygen, excess air, and dry molecular weight.

(6) 40 CFR Part 60, Appendix A, Method 3A—Determination of oxygen and carbon dioxide concentrations in emissions from stationary sources (instrumental analyzer procedure).

(7) 40 CFR Part 60, Appendix A, Method 4—Determination of moisture content in stack gases.

(8) Emission Measurement Center (EMC) Approved Alternative Method (ALT–011) ''Alternative Method 2 Thermocouple Calibration Procedure.''

(9) The Cadmus Group, Inc., 1998, ''EPA Flow Reference Method Testing and Analysis: Data Report, Texas Utilities, DeCordova Steam Electric Station, Volume I: Test Description and Appendix A (Data Distribution Package),'' EPA/430–R–98–015a.

(10) The Cadmus Group, Inc., 1998, ''EPA Flow Reference Method Testing and Analysis: Data Report, Texas Utilities, Lake Hubbard Steam Electric Station, Volume I: Test Description and Appendix A (Data Distribution Package),'' EPA/430–R–98–017a.

(11) The Cadmus Group, Inc., 1998, ''EPA Flow Reference Method Testing and Analysis: Data Report, Pennsylvania Electric Co., G.P.U. Genco Homer City Station: Unit 1, Volume I: Test Description and Appendix A (Data Distribution Package),'' EPA/430–R–98–018a.

(12) The Cadmus Group, Inc., May 1999, ''EPA Flow Reference Method Testing and Analysis: Findings Report,'' EPA/430–R–99–009.

(13) The Cadmus Group, Inc., 1997, ''EPA Flow Reference Method Testing and Analysis: Wind Tunnel Experimental Results,'' EPA/430–R–97–013.

(14) National Institute of Standards and Technology, 1998, ''Report of Special Test of Air Speed Instrumentation, Four Prandtl Probes, Four S-Type Probes, Four French Probes, Four Modified Kiel Probes,'' Prepared for the U.S. Environmental Protection Agency under IAG No. DW13938432–01–0.

(15) National Institute of Standards and Technology, 1998, ''Report of Special Test of Air Speed Instrumentation, Five Autoprobes,'' Prepared for the U.S. Environmental Protection Agency under IAG No. DW13938432–01–0.

(16) National Institute of Standards and Technology, 1998, ''Report of Special Test of Air Speed Instrumentation, Eight Spherical Probes,'' Prepared for the U.S. Environmental Protection Agency under IAG No. DW13938432–01–0.

(17) National Institute of Standards and Technology, 1998, ''Report of Special Test of Air Speed Instrumentation, Four DAT Probes,'' Prepared for the U.S. Environmental Protection Agency under IAG No. DW13938432–01–0.

(18) Massachusetts Institute of Technology (MIT), 1998, ''Calibration of Eight Wind Speed Probes Over a Reynolds Number Range of 46,000 to 725,000 per Foot, Text and Summary Plots,'' Plus Appendices, WBWT–TR–1317, Prepared for The Cadmus Group, Inc., under EPA Contract 68–W6–0050, Work Assignment 0007AA–3.

(19) Fossil Energy Research Corporation, Final Report, ''Velocity Probe Tests in Non-axial Flow Fields,'' November 1998, Prepared for the U.S. Environmental Protection Agency.

(20) Fossil Energy Research Corporation, ''Additional Swirl Tunnel Tests: E-DAT and T-DAT Probes,'' February 24, 1999, Technical Memorandum Prepared for U.S. Environmental Protection Agency, P.O. No. 7W–1193–NALX.

Table 2H-1. Distance from the Wall for the Interior Boundary, d_b, of a Method 1 Exterior Equal-Area Sector as a Function of the Stack or Duct Radius, r, and Number of Method 1 Traverse Points

Number of Method 1 Traverse Points	d_b
16	0.134 × r
20	0.106 × r
24	0.087 × r
28	0.074 × r
32	0.065 × r
36	0.057 × r
40	0.051 × r
44	0.047 × r
48	0.043 × r

Table 2H-2 Default and Minimum Acceptable Calculated Wall Effects Adjustment Factors

		Brick and Mortar Stacks	All Other Stacks and Ducts
Default WAF		0.9900	0.9950
Minimum Acceptable WAF	**Partial Traverse**	0.9800	
	Complete Traverse	0.9700	

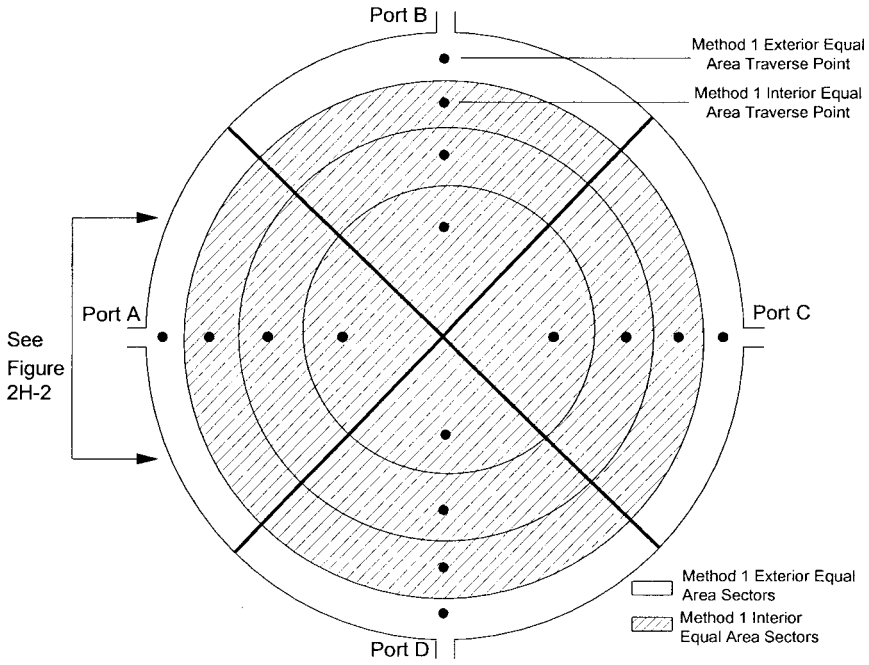

Figure 2H-1. Method 1 exterior and interior equal-area sectors with traverse points indicated.

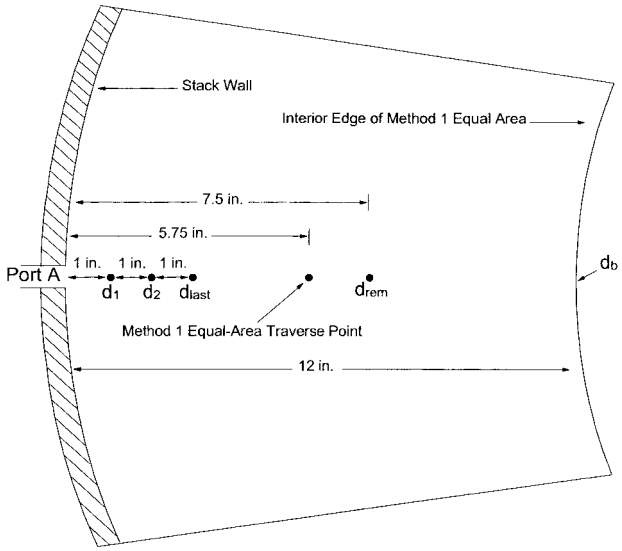

Figure 2H-2. Figure showing part of a Method 1 equal-area sector closest to the stack wall with three illustrative wall effects points at 1 in. intervals, the Method 1 equal-area traverse point, and d_{rem} for a 15 ft diameter stack.[1]

[1] Metric equivalents of English units used in Figure 2H-2 are as follows: 1 in. = 2.5 cm; 5.75 in. = 14.6 cm; 7.5 in. = 19.0 cm; 12 in. = 30.5 cm; and 15 ft = 4.6 m.

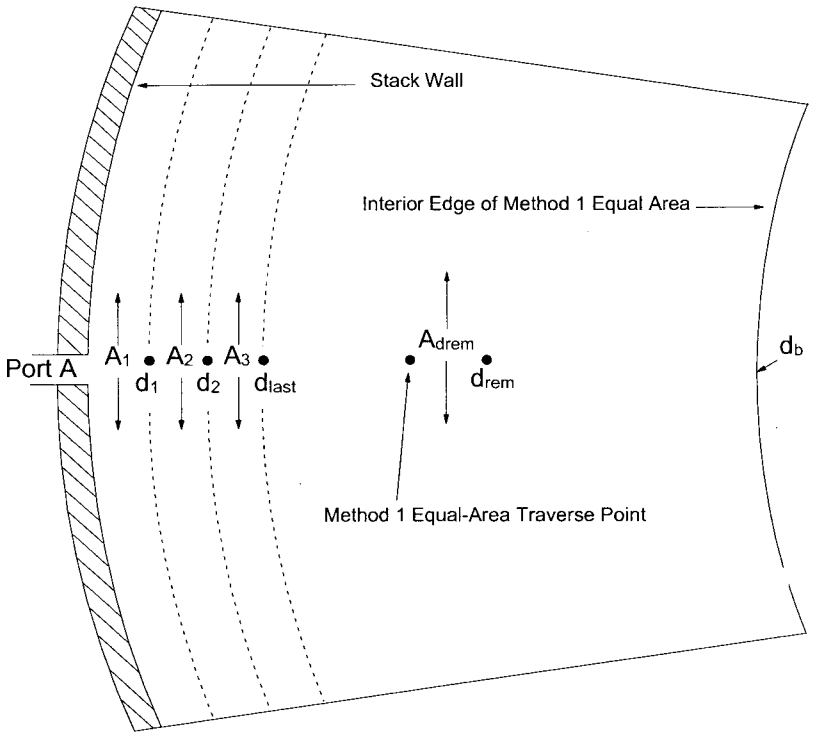

Figure 2H-3. Figure showing part of a Method 1 equal-area sector closest to the stack wall with three illustrative sub-sectors between the stack wall and d_{last} and the sub-sector represented by d_{rem}. A_1 is the area between the stack wall and d_1, A_2 is the area between d_1 and d_2, A_3 is the area between d_2 and d_{last}, and A_{drem} is the area between d_{last} and the interior edge of the Method 1 equal-area sector.

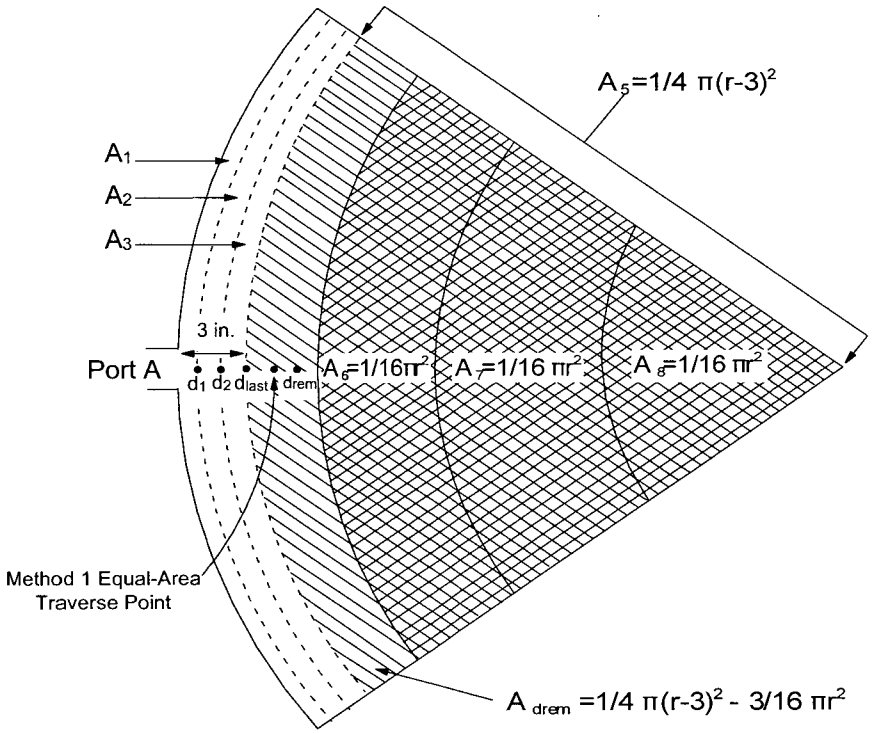

Figure 2H-4. Figure illustrating the calculations in Equation 2H-12 used to calculate the cross sectional area of the sub-sector between d_{last} and the interior edge of the Method 1 sector closest to the stack wall (A_{drem}) for a 16-point Method 1 traverse. The Method 1 equal-area traverse point and four wall effects traverse points (d_1, d_2, d_{last}, and d_{rem}) within the Method 1 sector closest to the stack wall are also shown.[1]

[1] All dimensions are given in in. Metric equivalents (in cm) are as follows: 3 in. = 7.6 cm; A_5 = 1/4 π(r−7.6)^2; and A_{drem} = 1/4 π(r−7.6)^2 - 3/16 πr^2.

Form 2H-1. Calculation of Wall Effects Replacement Velocity Values (16-Point Method 1 Traverse)

1st Probe Type/ID/Pts. Sampled: _____ Tester(s): _____

2nd Probe Type/ID/Pts. Sampled: _____ Affiliation: _____

Entry Port ID (e.g., A, B, C, or D): _____

1. Diameter of the stack or duct (ft)		Radius, r, of the stack or duct (in.) (= diameter × 6)	

2. Location (column A), measured and decay velocities (columns B and C), and volumetric flow (column G) associated with each successive wall effects traverse point.

(A)	(B)	(C)	(D)	(E)	(F)	(G)
Distance (d) from Wall	Measured Velocity (v_d) at Distance d	Decay Velocity ($vdec_d$)	Intermediate Calculations		Area of Sub-sector (A_d)	Volumetric Flow in Sub-sector (Q_d)
		$\frac{v_{d-1}+v_d}{2}$ Note: $v_0 = 0$	$\frac{1}{4}\pi[r-d+1]^2$	$\frac{1}{4}\pi[r-d]^2$	(Col. D - Col. E)	(Col. C × Col. F)
(*in.*)	(*ft/sec*)	(*ft/sec*)	(*in.*^{2})	(*in.*^{2})	(*in.*^{2})	(*ft-in.*^{2}/*sec*)
$d = 1$						
$d = 2$						
. . .						
d_{last}						

Note: $d_{last} \leq 0.1340\ r$, where r is the radius of the stack or duct. See section 8.2.2.3 of the method.

3. Total volumetric flow for all sub-sectors located between stack wall and d_{last} (total Col. G).	
4. Volumetric flow for remainder of the Method 1 equal-area sector.	
a. Velocity measurement at distance d_{rem} from stack wall (v_{drem}). (If d_{rem}- d_{last}<½ in., then no measurement at d_{rem} is necessary. Enter the velocity at d_{last} on this line.)	
b. Total area in remainder of Method 1 equal-area segment (A_{drem}). Subtract $\frac{3}{16}\pi(r)^2$ from last entry in item 2, column E, and enter the result on this line.	
c. Multiply values on lines 4a and 4b. (Q_{drem})	
5. Wall effects-adjusted velocity in the Method 1 equal-area sector.	
a. Add the values on lines 3 and 4c. (Q_T)	
b. Divide line 5a by $\frac{1}{16}\pi(r)^2$. The resulting value is one of four "replacement" point velocity values adjusted for wall effects, $\hat{v}e_{\perp}$, as derived in Equation 2H-16.	
6. Substitute the value shown in 5b for the unadjusted velocity value in the Method 1 sector. (See Eq. 2H-18.)	

Notes: 1. Column B: If no measurement is taken at distance d, enter the velocity value obtained at the first subsequent traverse point where a measurement was taken, followed by the letters "NM". See section 8.7.1.2.

2. For clarity, only English units are shown in this form. Following are metric equivalents of the English units used in the form. In row 2, column A: 1 in. = 2.5 cm; 2 in. = 5.1 cm. In row 2, column D: If metric units (cm) are used, the term $\frac{1}{4}\pi(r-d+1)^2$ must be changed to $\frac{1}{4}\pi(r-d+2.5)^2$. In row 4a: ½ in. = 12.7 mm. Throughout the form, the metric equivalents of *in.*, *in.*^{2}, *ft*, *ft/sec*, and *ft-in*^{2}*/sec* are *cm*, *cm*^{2}, *m*, *m/sec*, and *m-cm*^{2}*/sec*, respectively.

Form 2H-2. Calculation of Wall Effects Replacement Velocity Values (Any Method 1 Traverse ≥16 Points)

1st Probe Type/ID/Pts. Sampled: _____ Tester(s): _____

2nd Probe Type/ID/Pts. Sampled: _____ Affiliation: _____

Entry Port ID (e.g., A, B, C, or D): _____

1. Diameter of the stack or duct (ft)		Radius, r, of the stack or duct (in.) (= diameter × 6)	

2. Location (Column A), measured and decay velocities (Columns B and C), and volumetric flow (Column G) associated with each successive wall effects traverse point.

(A)	(B)	(C)	(D)	(E)	(F)	(G)
Distance (d) from Wall	Measured Velocity (v_d) at Distance d	Decay Velocity ($vdec_d$)	Intermediate Calculations		Area of Sub-sector (A_d)	Volumetric Flow in Sub-sector (Q_d)
		$\frac{v_{d-1}+v_d}{2}$ Note: $v_0 = 0$	$\frac{2}{p}\pi[r-d+1]^2$	$\frac{2}{p}\pi[r-d]^2$	(Col. D - Col. E)	(Col. C × Col. F)
(*in.*)	(*ft/sec*)	(*ft/sec*)	(*in.*^{2})	(*in.*^{2})	(*in.*^{2})	(*ft-in.*^{2}/*sec*)
$d = 1$						
$d = 2$						
. . .						
d_{last}						

Note: $d_{last} \leq d_b$, as defined in section 8.2.2.3 of the method.

3. Total volumetric flow for all sub-sectors located between stack wall and d_{last} (total Col. G).	
4. Volumetric flow for remainder of the Method 1 equal-area sector.	
a. Velocity measurement at distance d_{rem} from stack wall (v_{drem}). (If $d_{rem} - d_{last} < ½$ in., then no measurement at d_{rem} is necessary. Enter the velocity at d_{last} on this line.)	
b. Total area in remainder of Method 1 equal-area segment (A_{drem}). Subtract $\left\{\frac{p-2}{4p}\right\}\pi(r)^2$ from last entry in item 2, column E, and enter the result on this line.	
c. Multiply values on lines 4a and 4b. (Q_{drem})	
5. Wall effects-adjusted velocity in the Method 1 near-wall equal-area segment.	
a. Add the values on lines 3 and 4. (Q_T)	
b. Divide line 5a by $\left\{\frac{1}{2p}\right\}\pi(r)^2$. The resulting value is one of four "replacement" point velocity values adjusted for wall effects, $\hat{v}e_j$, as derived in Equation 2H-15.	
6. Substitute the value shown in 5b for the unadjusted velocity value in the Method 1 sector. (See Eq. 2H-17.)	

Notes: 1. Column B: If no measurement is taken at distance d, enter the velocity value obtained at the first subsequent traverse point where a measurement was taken, followed by the letters "NM". See section 8.7.1.2.

2. For clarity, only English units are shown in this form. Following are metric equivalents of the English units used in the form. In row 2, column A: 1 in. = 2.5 cm; 2 in. = 5.1 cm. In row 2, column D: If metric units (cm) are used, the term $¼\,\pi(r-d+1)^2$ must be changed to $¼\,\pi(r-d+2.5)^2$. In row 4a: ½ in. = 12.7 mm. Throughout the form, the metric equivalents of *in.*, *in.*^{2}, *ft*, *ft/sec*, and *ft-in*^{2}*/sec* are *cm*, *cm*^{2}, *m*, *m/sec*, and *m-cm*^{2}*/sec*, respectively.

Form 2H-3. Calculation of Replacement Velocity Values for a Method 1 Equal-Area Sector Closest to the Stack Wall for a 16-Point Method 1 Traverse, Using a Partial Wall Effects Traverse

1st Probe Type/ID/Pts. Sampled: *Type S Straight-up/S-13/All* Tester(s): *Test Team III*

2nd Probe Type/ID/Pts. Sampled: _____ Affiliation: *Contractor III*

Entry Port ID (e.g., A, B, C, or D): *A*

1. Diameter of the stack or duct (ft)	*24*	Radius, r, of the stack or duct (in.) (= diameter × 6)	*144*

2. Location (column A), measured and decay velocities (columns B and C), and volumetric flow (column G) associated with each successive wall effects traverse point.

(A)	(B)	(C)	(D)	(E)	(F)	(G)
Distance (d) from Wall	Measured Velocity (v_d) at Distance d	Decay Velocity ($vdec_d$)	Intermediate Calculations		Area of Sub-sector (A_d)	Volumetric Flow in Sub-sector (Q_d)
		$\frac{v_{d-1}+v_d}{2}$ Note: $v_0 = 0$	$\frac{1}{4}\pi[r-d+1]^2$	$\frac{1}{4}\pi[r-d]^2$	(Col. D - Col. E)	(Col. C × Col. F)
(*in.*)	(*ft/sec*)	(*ft/sec*)	(*in.*^{2})	(*in.*^{2})	(*in.*^{2})	(*ft-in.*^{2}/*sec*)
d = 1	*51.71 NM*	*25.85*	*16,286.00*	*16,060.59*	*225.41*	*5,827.47*
d = 2	*51.71 NM*	*51.71*	*16,060.59*	*15,836.76*	*223.84*	*11,573.72*
d_{last} *= 3*	*51.71*	*51.71*	*15,836.76*	*15,614.49*	*222.27*	*11,492.51*

3. Total volumetric flow for all sub-sectors located between stack wall and d_{last} (total Col. G).	*28,893.70*
4. Volumetric flow for remainder of the Method 1 equal-area sector.	
a. Velocity measurement at distance d_{rem} from stack wall (v_{drem}). (If d_{rem} - d_{last} <½ in., then no measurement at d_{rem} is necessary. Enter the velocity at d_{last} on this line.)	*77.01*
b. Total area in remainder of Method 1 equal-area segment (A_{drem}). Subtract $\frac{3}{16}\pi(r)^2$ from last entry in item 2, column E, and enter the result on this line.	*3,399.99*
c. Multiply values on lines 4a and 4b. (Q_{drem})	*261,832.90*
5. Wall effects-adjusted velocity in the Method 1 equal-area sector.	
a. Add the values on lines 3 and 4c. (Q_T)	*290,726.61*
b. Divide line 5a by $\frac{1}{16}\pi(r)^2$. The resulting value is one of four "replacement" point velocity values adjusted for wall effects, $\hat{v}e_j$, as derived in Equation 2H-16.	*71.41*
6. Substitute the value shown in 5b for the unadjusted velocity value in the Method 1 sector. (See Eq. 2H-18.)	

Form 2H-4 Calculation of Replacement Velocity Values for a Method 1 Equal-Area Sector Closest to the Stack Wall for a 16-Point Method 1 Traverse, Using a Complete Traverse

1st Probe Type/ID/Pts. Sampled: *Type S Straight-up/S-13/All* Tester(s): *Test Team III*

2nd Probe Type/ID/Pts. Sampled: _____ Affiliation: *Contractor III*

Entry Port ID (e.g., A, B, C, or D): *A*

1. Diameter of the stack or duct (ft)	24	Radius, r, of the stack or duct (in.) (= diameter × 6)	144

2. Location (column A), measured and decay velocities (columns B and C), and volumetric flow (column G) associated with each successive wall effects traverse point.

(A)	(B)	(C)	(D)	(E)	(F)	(G)
Distance (d) from Wall	Measured Velocity (v_d) at Distance d	Decay Velocity ($vdec_d$)	Intermediate Calculations		Area of Sub-sector (A_d)	Volumetric Flow in Sub-sector (Q_d)
		$\frac{v_{d-1}+v_d}{2}$ Note: $v_0 = 0$	$\frac{1}{4}\pi[r-d+1]^2$	$\frac{1}{4}\pi[r-d]^2$	(Col. D - Col. E)	(Col. C × Col. F)
(in.)	(ft/sec)	(ft/sec)	(in.^{2})	(in.^{2})	(in.^{2})	(ft-in.^{2}/sec)
$d = 1$	51.71 NM	25.85	16,286.00	16,060.59	225.41	5,827.47
$d = 2$	51.71 NM	51.71	16,060.59	15,836.76	223.84	11,573.72
$d = 3$	51.71	51.71	15,836.76	15,614.49	222.27	11,492.51
$d = 4$	62.26	56.98	15,614.49	15,393.79	220.70	12,576.24
$d = 5$	67.16	64.71	15,393.79	15,174.67	219.13	14,179.40
$d = 6$	69.44	68.30	15,174.67	14,957.11	217.56	14,858.32
$d = 7$	72.63	71.03	14,957.11	14,741.13	215.98	15,341.75
$d = 8$	71.37	72.00	14,741.13	14,526.71	214.41	15,437.01
$d = 9$	74.37	72.87	14,526.71	14,313.87	212.84	15,510.03
$d = 10$	75.80	75.08	14,313.87	14,102.60	211.27	15,863.30
$d = 11$	77.15	76.47	14,102.60	13,892.90	209.70	16,035.93
$d_{last} = 12$	78.58	77.86	13,892.90	13,684.77	208.13	16,205.92

3. Total volumetric flow for all sub-sectors located between stack wall and d_{last} (total Col. G).	164,901.59
4. Volumetric flow for remainder of the Method 1 equal-area sector.	
a. Velocity measurement at distance d_{rem} from stack wall (v_{drem}). (If d_{rem} - d_{last} <½ in., then no measurement at d_{rem} is necessary. Enter the velocity at d_{last} on this line.)	78.51
b. Total area in remainder of Method 1 equal-area segment (A_{drem}). Subtract $\frac{3}{16}\pi(r)^2$ from last entry in item 2, column E, and enter the result on this line.	1,470.26
c. Multiply values on lines 4a and 4b. (Q_{drem})	115,430.44
5. Wall effects-adjusted velocity in the Method 1 equal-area sector.	
a. Add the values on lines 3 and 4c. (Q_T)	280,332.03
b. Divide line 5a by $\frac{1}{16}\pi(r)^2$. The resulting value is one of four "replacement" point velocity values adjusted for wall effects, $\hat{v}e_L$, as derived in Equation 2H-16.	68.85
6. Substitute the value shown in 5b for the unadjusted velocity value in the Method 1 sector. (See Eq. 2H-18.)	

METHOD 3—GAS ANALYSIS FOR THE DETERMINATION OF DRY MOLECULAR WEIGHT

1. APPLICABILITY AND PRINCIPLE

1.1 Applicability.

1.1.1 This method is applicable for determining carbon dioxide (CO_2) and oxygen (O_2) concentrations and dry molecular weight of a sample from a gas stream of a fossil-fuel combustion process. The method may also be applicable to other processes where it has been determined that compounds other than CO_2, O_2, carbon monoxide (CO), and nitrogen (N_2) are not present in concentrations sufficient to affect the results.

1.1.2 Other methods, as well as modifications to the procedure described herein, are also applicable for some or all of the above determinations. Examples of specific methods and modifications include: (1) A multipoint sampling method using an Orsat analyzer to analyze individual grab samples obtained at each point; (2) a method using CO_2 or O_2 and stoichiometric calculations to determine dry molecular weight; and (3) assigning a value of 30.0 for dry molecular weight, in lieu of actual measurements, for processes burning natural gas, coal, or oil. These methods and modifications may be used, but are subject to the approval of the Administrator, U.S. Environmental Protection Agency (EPA).

1.1.3 Note. Mention of trade names or specific products does not constitute endorsements by EPA.

1.2 Principle. A gas sample is extracted from a stack by one of the following methods: (1) Single-point, grab sampling; (2) single-point, integrated sampling; or (3) multipoint, integrated sampling. The gas sample is analyzed for pecent CO_2, percent O_2, and if necessary, for percent CO. For dry molecular weight determination, either an Orsat or a Fyrite analyzer may be used for the analysis.

2. APPARATUS

As an alternative to the sampling apparatus and systems described herein, other sampling systems (e.g., liquid displacement) may be used, provided such systems are capable of obtaining a representative sample and maintaining a constant sampling rate, and are, otherwise, capable of yielding acceptable results. Use of such systems is subject to the approval of the Administrator.

2.1 Grab Sampling (Figure 3–1).

2.1.1 Probe. Stainless steel or borosilicate glass tubing equipped with an in-stack or out-stack filter to remove particulate matter (a plug of glass wool is satisfactory for this purpose). Any other materials, inert to O_2, CO_2, CO, and N_2 and resistant to temperature at sampling conditions, may be used for the probe. Examples of such materials are aluminum, copper, quartz glass, and Teflon.

2.1.2 Pump. A one-way squeeze bulb, or equivalent, to transport the gas sample to the analyzer.

2.2 Integrated Sampling (Figure 3–2).

2.2.1 Probe. Same as in Section 2.1.1.

2.2.2 Condenser. An air-cooled or water-cooled condenser, or other condenser no greater than 250 ml that will not remove O_2, CO_2, CO, and N_2, to remove excess moisture which would interfere with the operation of the pump and flowmeter.

2.2.3 Valve. A needle valve, to adjust sample gas flow rate.

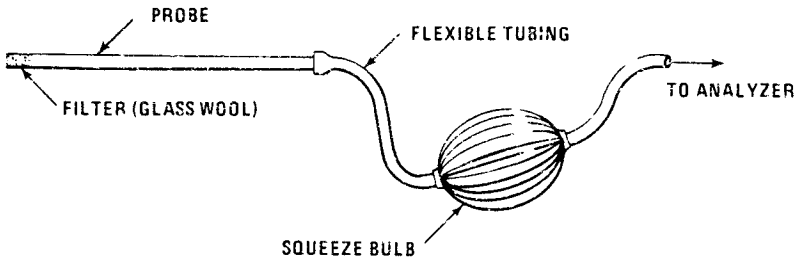

Figure 3-1. Grab-sampling train.

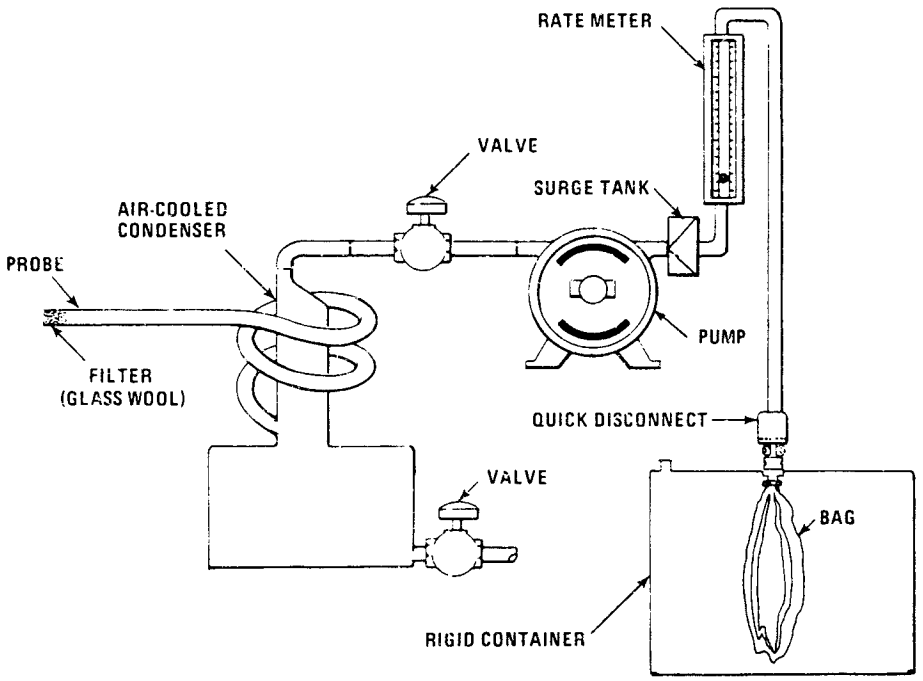

Figure 3-2. Integrated gas-sampling train.

2.2.4 Pump. A leaf-free, diaphragm-type pump, or equivalent, to transport sample gas to the flexible bag. Install a small surge tank between the pump and rate meter to eliminate the pulsation effect of the diaphragm pump on the rotameter.

2.2.5 Rate Meter. A rotameter, or equivalent rate meter, capable of measuring flow rate to within 2 percent of the selected flow rate. A flow rate range of 500 to 1000 cc/min is suggested.

2.2.6 Flexible Bag. Any leak-free plastic (e.g., Tedlar, Mylar, Teflon) or plastic-coated aluminum (e.g., aluminized Mylar) bag, or equivalent, having a capacity consistent with the selected flow rate and time length of the test run. A capacity in the range of 55 to 90 liters is suggested. To leak check the

bag, connect it to a water manometer, and pressurize the bag to 5 to 10 cm H_2O (2 to 4 in. H_2O). Allow to stand for 10 minutes. Any displacement in the water manometer indicates a leak. An alternative leak-check method is to pressurize the bag to 5 to 10 cm (2 to 4 in.) H_2O and allow to stand overnight. A deflated bag indicates a leak.

2.2.7 Pressure Gauge. A water-filled U-tube manometer, or equivalent, of about 30 cm (12 in.), for the flexible bag leak check.

2.2.8 Vacuum Gauge. A mercury manometer, or equivalent, of at least 760 mm (30 in.) Hg, for the sampling train leak check.

2.3 Analysis. An Orsat or Fyrite type combustion gas analyzer. For Orsat and Fyrite analyzer maintenance and operation procedures, follow the instructions recommended by the manufacturer, unless otherwise specified herein.

3. Single-Point, Grab Sampling and Analytical Procedure

3.1 The sampling point in the duct shall either be at the centroid of the cross section or at a point no closer to the walls than 1.00 m (3.3 ft), unless otherwise specified by the Administrator.

3.2 Set up the equipment as shown in Figure 3–1, making sure all connections ahead of the analyzer are tight. If an Orsat analyzer is used, it is recommended that the analyzer be leak checked by following the procedure in Section 6; however, the leak check is optional.

3.3 Place the probe in the stack, with the tip of the probe positioned at the sampling point; purge the sampling line long enough to allow at least five exchanges. Draw a sample into the analyzer, and immediately analyze it for percent CO_2 and percent O_2. Determine the percentage of the gas that is N_2 and CO by subtracting the sum of the percent CO_2 and percent 0_2 O from 100 percent. Calculate the dry molecular weight as indicated in Section 7.2.

3.4 Repeat the sampling, analysis, and calculation procedures until the dry molecular weights of any three grab samples differ from their mean by no more than 0.3 g/g-mole (0.3 lb/lb-mole). Average these three molecular weights, and report the results to the nearest 0.1 g/g-mole (0.1 lb/lb-mole).

4. Single-Point, Integrated Sampling and Analytical Procedure

4.1 The sampling point in the duct shall be located as specified in Section 3.1.

4.2 Leak check (optional) the flexible bag as in Section 2.2.6. Set up the equipment as shown in Figure 3–2. Just before sampling, leak check (optional) the train by placing a vacuum gauge at the condenser inlet, pulling a vacuum of at least 250 mm Hg (10 in. Hg), plugging the outlet at the quick disconnect, and then turning off the pump. The vacuum should remain stable for at least 0.5 minute. Evacuate the flexible bag. Connect the probe, and place it in the stack, with the tip of the probe positioned at the sampling point; purge the sampling line. Next, connect the bag, and make sure that all connections are tight.

4.3 Sample at a constant rate. The sampling run should be simultaneous with, and for the same total length of time as, the pollutant emission rate determination. Collection of at least 30 liters (1.00 ft^3) of sample gas is recommended; however, smaller volumes may be collected, if desired.

4.4 Obtain one integrated flue gas sample during each pollutant emission rate determination. Within 8 hours after the sample is taken, analyze it for percent CO_2 and percent O_2 using either an Orsat analyzer or a Fyrite type combustion gas analyzer. If an Orsat analyzer is used, it is recommended that Orsat leak check described in Section 6, be performed before this determination; however, the check is optional. Determine the percentage of the gas that is N_2 and CO by subtracting the sum of the percent CO_2 and percent 0 from 100 percent. Calculate the dry molecular weight as indicated in Section 7.2.

4.5 Repeat the analysis and calculation procedures until the individual dry molecular weights for any three analyses differ from their mean by no more than 0.3 g/g-mole (0.3 lb/lb-mole). Average these three molecular weights, and report the results to the nearest 0.1 g/g-mole (0.1 lb/lb-mole).

5. Multi-Point, Integrated Sampling and Analytical Procedure

5.1 Unless otherwise specified by the Administrator, a minimum of eight traverse points shall be used for circular stacks having diameters less than 0.61 m (24 in.), a minimum of nine shall be used for rectangular stacks having equivalent diameters less than 0.61 m (24 in.), and a minimum of 12 traverse points shall be used for all other cases. The traverse points shall be located according to Method 1. The use of fewer points is subject to approval of the Administrator.

5.2 Follow the procedures outlined in Sections 4.2 through 4.5, except for the following: Traverse all sampling points, and sample at each point for an equal length of time. Record sampling data as shown in Figure 3–3.

Time	Traverse pt.	Q, liter/min	% dev.[a]
Average			

[a] % dev.=(Q—Q_{avg})/Q_{avg} X 100 (Must be ≤10%)

Figure 3–3. Sampling rate data.

6. LEAK-CHECK PROCEDURE FOR ORSAT ANALYZER

Moving an Orsat analyzer frequently causes it to leak. Therefore, an Orsat analyzer should be thoroughly leak checked on site before the flue gas sample is introduced into it. The procedure for leak checking an Orsat analyzer is as follows:

6.1 Bring the liquid level in each pipette up to the reference mark on the capillary tubing, and then close the pipette stopcock.

6.2 Raise the leveling bulb sufficiently to bring the confining liquid meniscus onto the graduated portion of the burette, and then close the manifold stopcock.

6.3 Record the meniscus position.

6.4 Observe the menisus in the burette and the liquid level in the pipette for movement over the next 4 minutes.

6.5 For the Orsat analyzer to pass the leak check, two conditions must be met:

6.5.1 The liquid level in each pipette must not fall below the botton of the capillary tubing during this 4-minute interval.

6.5.2 The menisus in the burette must not change by more than 0.2 ml during this 4-minute interval.

6.6 If the anlyzer fails the leak-check procedure, check all rubber connections and stopcocks to determine whether they might be the cause of the leak. Disassemble, clean, and regrease leaking stopcocks. Replace leaking rubber connections. After the analyzer is reassembled, repeat the lead-check procedure.

7. CALCULATIONS

7.1 Nomenclature

M_d = Dry molecular weight, g/g-mole (1b/1b-mole).
$\%CO_2$ = Percent CO_2 by volume, dry basis.
$\%O_2$ = Percent O_2 by volume, dry basis.
%CO = Percent CO by volume, dry basis.
$\%N_2$ = Percent N_2 by volume, dry basis.
0.280 = Molecular weight of N_2 or CO, divided by 100.
0.320 = Molecular wight of O_2 divided by 100.
0.440 = Molecular weight of CO_2 divided by 100.

7.2 Dry Molecular Weight. Use Equation 3–1 to calculate the dry molecular weight of the stack gas.

$$M_d = 0.440(\%CO_2) + 0.320\ (\%O_2) + 0.280(\%N_2 + \%CO) \quad \text{Eq. 3–1}$$

NOTE. The above equation does not consider argon in air (about 0.9 percent, molecular weight of 39.9). A negative error of about 0.4 percent is introduced. The tester may choose to include argon in the analysis using procedures subject to approval of the Administrator.

8. BIBLIOGRAPHY

1. Altshuller, A.P. Storage of Gases and Vapors in Plastic Bags. International Journal of Air and Water Pollution. 6:75–81. 1963.

2. Conner, William D. and J.S. Nader. Air Sampling with Plastic Bags. Journal of the American Industrial Hygiene Association. *25:*292–297. 1964.

3. Burrell Manual for Gas Analysts, Seventh edition. Burrell Corporation, 2223 Fifth Avenue, Pittsburgh, PA. 15219. 1951.

4. Mitchell, W.J. and M.R. Midgett, Field Reliability of the Orsat Analyzer. Journal of Air Pollution Control Association. *26:*491–495. May 1976.

5. Shigehara, R.T., R. M. Neulicht, and W.S. Smith. Validating Orsat Analysis Data from Fossil Fuel-Fired Units. Stack Sampling News. *4*(2):21–26. August 1976.

METHOD 3A—DETERMINATION OF OXYGEN AND CARBON DIOXIDE CONCENTRATIONS IN EMISSIONS FROM STATIONARY SOURCES (INSTRUMENTAL ANALYZER PROCEDURE)

1. *Applicability and Principle*

1.1 Applicability. This method is applicable to the determination of oxygen (O_2) and carbon dioxide (CO_2) concentrations in emissions from stationary sources only when specified within the regulations.

1.2 Principle. A sample is continuously extracted from the effluent stream: a portion of the sample stream is conveyed to an instrumental analyzer(s) for determination of O_2 and CO_2 concentration(s). Performance specifications and test procedures are provided to ensure reliable data.

2. *Range and Sensitivity*

Same as Method 6C, Sections 2.1 and 2.2, except that the span of the monitoring system shall be selected such that the average O_2 or CO_2 concentration is not less than 20 percent of the span.

3. *Definitions*

3.1 Measurement System. The total equipment required for the determination of the O_2 or CO_2 concentration. The measurement system consists of the same major subsystems as defined in Method 6C, Sections 3.1.1, 3.1.2, and 3.1.3.

3.2 Span, Calibration Gas, Analyzer Calibration Error, Sampling System Bias, Zero Drift, Calibration Drift, Response Time, and Calibration Curve. Same as Method 6C, Sections 3.2 through 3.8, and 3.10.

3.3 Interference Response. The output response of the measurement system to a component in the sample gas, other than the gas component being measured.

4. *Measurement System Performance Specifications*

Same as Method 6C, Sections 4.1 through 4.4.

5. *Apparatus and Reagents*

5.1 Measurement System. Any measurement system for O_2 or CO_2 that meets the specifications of this method. A schematic of an acceptable measurement system is shown in Figure 6C–1 of Method 6C. The essential components of the measurement system are described below:

5.1.1 Sample Probe. A leak-free probe, of sufficient length to traverse the sample points.

5.1.2 Sample Line. Tubing, to transport the sample gas from the probe to the moisture removal system. A heated sample line is not required for systems that measure the O_2 or CO_2 concentration on a dry basis, or transport dry gases.

5.1.3 Sample Transport Line, Calibration Value Assembly, Moisture Removal System, Particulate Filter, Sample Pump, Sample Flow Rate Control, Sample Gas Manifold, and Data Recorder. Same as Method 6C, Sections 5.1.3 through 5.1.9, and 5.1.11, except that the requirements to use stainless steel, Teflon, and nonreactive glass filters do not apply.

5.1.4 Gas Analyzer. An analyzer to determine continuously the O_2 or CO_2 concentration in the sample gas stream. The analyzer shall meet the applicable performance specifications of Section 4. A means of controlling the analyzer flow rate and a device for determining proper sample flow rate (e.g., precision rotameter, pressure gauge downstream of all flow controls, etc.) shall be provided at the analyzer. The requirements for measuring and controlling the analyzer flow rate are not applicable if data are presented that demonstrate the analyzer is insensitive to flow variations over the range encountered during the test.

5.2 Calibration Gases. The calibration gases for CO_2 analyzers shall be CO_2 in N_2 or CO_2 in air. Alternatively, CO_2/SO_2, O_2/SO_2 , or $O_2/CO_2/SO_2$ gas mixtures in N_2 may be used. Three calibration gases, as specified Section 5.3.1 through 5.3.3 of Method 6C, shall be used. For O_2 monitors that cannot analyze zero gas, a calibration gas concentration equivalent to less than 10 percent of the span may be used in place of zero gas.

6. *Measurement System Performance Test Procedures*

Perform the following procedures before measurement of emissions (Section 7).

6.1 Calibration Concentration Verification. Follow Section 6.1 of Method 6C, except if calibration gas analysis is required, use Method 3 and change the acceptance criteria for agreement among Method 3 results to 5 percent (or 0.2 percent by volume, whichever is greater).

6.2 Interference Response. Conduct an interference response test of the analyzer prior to its initial use in the field. Thereafter, recheck the measurement system if changes are made in the instrumentation that could alter the interference response (e.g., changes in the type of gas detector). Conduct the interference response in accordance with Section 5.4 of Method 20.

6.3 Measurement System Preparation, Analyzer Calibration Error, and Sampling System Bias Check. Follow Sections 6.2 through 6.4 of Method 6C.

7. *Emission Test Procedure*

7.1 Selection of Sampling Site and Sampling Points. Select a measurement site and sampling points using the same criteria that are applicable to tests performed using Method 3.

7.2 Sample Collection. Position the sampling probe at the first measurement point, and begin sampling at the same rate as used during the sampling system bias check. Maintain constant rate sampling (i.e., ±10 percent) during the entire run. The sampling time per run shall be the same as for tests conducted using Method 3 plus twice the system response time. For each run, use only those measurements obtained after twice the response time of the measurement system has elapsed to determine the average effluent concentration.

7.3 Zero and Calibration Drift Test. Follow Section 7.4 of Method 6C.

8. *Quality Control Procedures*

The following quality control procedures are recommended when the results of this method are used for an emission rate correction factor, or excess air determination. The tester should select one of the following options for validating measurement results:

8.1 If both O_2 and CO_2 are measured using Method 3A, the procedures described in Section 4.4 of Method 3 should be followed to validate the O_2 and CO_2 measurement results.

8.2 If only O_2 is measured using Method 3A, measurements of the sample stream CO_2 concentration should be obtained at the sample by-pass vent discharge using an Orsat or Fyrite analyzer, or equivalent. Duplicate samples should be obtained concurrent with at least one run. Average the duplicate Orsat or Fyrite analysis results for each run. Use the average CO_2 values for comparison with the O_2 measurements in accordance with the procedures described in Section 4.4 of Method 3.

8.3 If only CO_2 is measured using Method 3A, concurrent measurements of the sample stream CO_2 concentration should be obtained using an Orsat or Fyrite analyzer as described in Section 8.2. For each run, differences greater than 0.5 percent between the Method 3A results and the average of the duplicate Fyrite analysis should be investigated.

9. *Emission Calculation*

For all CO_2 analyzers, and for O_2 analyzers that can be calibrated with zero gas, follow

Section 8 of Method 6C, except express all concentrations as percent, rather than ppm.

For O_2 analyzers that use a low-level calibration gas in place of a zero gas, calculate the effluent gas concentration using Equation 3A–1.

$$C_{gas} = \frac{C_{ma} - C_{oa}}{C_m - C_o}\left(\overline{C} - C_m\right) + C_{ma} \qquad \text{Eq. 3A-1}$$

Where:

C_{gas}=Effluent gas concentration, dry basis, percent.

C_{ma}=Actual concentration of the upscale calibration gas, percent.

C_{oa}=Actual concentration of the low-level calibration gas, percent.

C_m=Average of initial and final system calibration bias check responses for the upscale calibration gas, percent.

C_o=Average of initial and final system calibration bias check responses for the low-level gas, percent.

$\overline{C}$=Average gas concentration indicated by the gas analyzer, dry basis, percent.

10. *Bibliography*

Same as bibliography of Method 6C.

METHOD 3B—GAS ANALYSIS FOR THE DETERMINATION OF EMISSION RATE CORRECTION FACTOR OR EXCESS AIR

1. APPLICABILITY AND PRINCIPLE

1.1 Applicability

1.1.1 This method is applicable for determining carbon dioxide (CO_2), oxygen (O_2), and carbon monoxide (CO) concentrations of a sample from a gas stream of a fossil-fuel combustion provess for excess air or emission rate correction factor calculations.

1.1.2 Other methods, as well as modifications to the procedure described herein, are also applicable for all of the above determinations. Examples of specific methods and modifications include: (1) A multi-point sampling method using an Orsat analyzer to analyze individual grab samples obtained at each point, and (2) a method using CO_2 or O_2 and stoichiometric calculations to determine excess air. These methods and modifications may be used, but are subject to the approval of the Administrator, U.S. Environmental Protection Agency (FPA).

1.1.3 Note. Mention of trade names or specific products does not constitute endorsement by EPA.

1.2 Principle. A gas sample is extracted from a stack by one of the following methods: (1) Single-point, grab sampling; (2) single-point, integrated sampling; or (3) multipoint, integrated sampling. The gas sample is analyzed for percent CO_2 percent O_2, and, if necessary, percent CO. An Orsat analyzer must be used for excess air or emission rate correction factor determinations.

2. APPARATUS

The alternative sampling systems are the same as those mentioned in Section 2 of Method 3.

2.1 Grab Sampling and Integrated Sampling. Same as in Sections 2.1 and 2.2, respectively, of Method 3.

2.2 Analysis. An Orsat analyzer only. For low CO_2 (less than 4.0 percent) or high O_2 (greater than 15.0 percent) concentrations, the measuring burette of the Orsat must have at least 0.1 percent subdivisions. For Orsat maintenance and operation procedures, follow the instructions recommended by the manufacturer, unless otherwise specified herein.

3. PROCEDURES

Each of the three procedures below shall be used only when specified in an applicable subpart of the standards. The use of these procedures for other purposes must have specific prior approval of the Adminsitrator.

NOTE .—A Fyrite-type combustion gas analyzer is not acceptable for excess air or emission rate correction factor determinations, unless approved by the Administrator. If both percent CO_2 and percent O_2 are measured, the analytical results of any of the three procedures given below may be used for calculating the dry molecular weight (see Method 3).

3.1 Single-Point, Grab Sampling and Analytical Procedure.

3.1.1 The sampling point in the duct shall be as described in Section 3.1 of Method 3.

3.1.2 Set up the equipment as shown in Figure 3–1 of Method 3, making sure all connections ahead of the analyzer are tight. Leak check the Orsat analyzer according to the procedure described in Section 6 of Method 3. This leak check is mandatory.

3.1.3 Place the probe in the stack, with the tip of the probe positioned at the sampling point; purge the sampling line long enough to allow at least five exchanges. Draw a sample into the analyzer. For emission rate correction factor determinations, immediately analyze the sample, as outlined

in Sections 3.1.4 and 3.1.5, for percent CO_2 or percent O_2. If excess air is desired, proceed as follows: (1) immediately analyze the sample, as in Sections 3.1.4 and 3.1.5, for percent CO_2, O_2, and CO; (2) determine the percentage of the gas that is N_2 by subtracting the sum of the percent CO_2, percent O_2, and percent CO from 100 percent, and (3) calculate percent excess air as outlined in Section 4.2.

3.1.4 To ensure complete absorption of the CO_2, O_2, or if applicable, CO, make repeated passes through each absorbing solution until two consecutive readings are the same. Several passes (three or four) should be made between readings. (If constant readings cannot be obtained after three consecutive readings, replace the absorbing solution.)

NOTE. —Since this single-point, grab sampling and analytical procedure is normally conducted in conjunction with a single-point, grab sampling and analytical procedure for a pollutant, only one analysis is ordinarily conducted. Therefore, great care must be taken to obtain a valid sample and analysis. Although in most cases, only CO_2 or O_2 is required, it is recommended that both CO_2 and O_2 be measured, and that Section 3.4 be used to validate the analytical data.

3.1.5 After the analysis is completed, leak check (mandatory) the Orsat analyzer once again, as described in Section 6 of Method 3. For the results of the analysis to be valid, the Orsat analyzer must pass this leak test before and after the analysis.

3.2 Single-Point, Integrated Sampling and Analytical Procedure.

3.2.1 The sampling point in the duct shall be located as specified in Section 3.1.1.

3.2.2 Leak check (mandatory) the flexible bag as in Section 2.2.6 of Method 3. Set up the equipment as shown in Figure 3–2 of Method 3. Just before sampling, leak check (mandatory) the train as described in Section 4.2 of Method 3.

3.2.3 Sample at a constant rate, or as specified by the Administrator. The sampling run must be simultaneous with, and for the same total length of time as, the pollutant emission rate determination. Collect at least 30 liters (1.00 ft^3) of sample gas. Smaller volumes may be collected, subject to approval of the Administrator.

3.2.4 Obtain one integrated flue gas sample during each pollutant emission rate determination. For emission rate correction factor determination, analyze the sample within 4 hours after it is taken for percent CO_2 or percent O_2 (as outlined in Sections 3.2.5 through 3.2.7). The Orsat analyzer must be leak checked (see Section 6 of Method 3) before the analysis. If excess air is desired, procede as follows: (1) within 4 hours after the sample is taken, analyze it (as in Sections 3.2.5 through 3.2.7) for percent CO_2, O_2, and CO; (2) determine the percentage of the gas that is N_2 by subtracting the sum of the percent CO_2, percent O_2, and percent CO from 100 percent; and (3) calculate percent excess air, as outlined in Section 4.2.

3.2.5 To ensure complete absorption of the CO_2, O_2, or if applicable, CO, follow the procedure described in Section 3.1.4.

NOTE. —Although in most instances only CO_2 or O_2 is required, it is recommended that both CO_2 and O_2 be measured, and that Section 3.4.1 be used to validate the analytical data.

3.2.6 Repeat the analysis until the following criteria are met:

3.2.6.1 For percent CO_2, repeat the analytical procedure until the results of any three analyses differ by no more than (a) 0.3 percent by volume when CO_2 is greater than 4.0 percent or (b) 0.2 percent by volume when CO_2 is less than or equal to 4.0 percent. Average three acceptable values of percent CO_2, and report the results to the nearest 0.2 percent.

3.2.6.2 For percent O_2, repeat the analytical procedure until the results of any three analyses differ by no more than (a) 0.3 percent by volume when O_2 is less than 15.0 percent or (b) 0.2 percent by volume when O_2 is greater than or equal to 15.0 percent. Average the three acceptable values of percent O_2, and report the results to the nearest 0.1 percent.

3.2.6.3 For percent CO, repeat the analytical procedure until the results of any three analyses differ by no more than 0.3 percent. Average the three acceptable values of percent CO, and report the results to the nearest 0.1 percent.

3.2.7 After the analysis is completed, leak check (mandatory) the Orsat analyzer once again, as described in Section 6 of Method 3. For the results of the analysis to be valid, the Orsat analyzer must pass this leak test before and after the analysis.

3.3 Multi-Point, Integrated Sampling and Analytical Procedure.

3.3.1 The sampling points shall be determined as specified in Section 5.3 of Method 3.

3.3.2 Follow the procedures outlined in Sections 3.2.2 through 3.2.7, except for the following: Traverse all sampling points, and sample at each point for an equal length of time. Record sampling data as shown in Figure 3–3 of Method 3.

3.4 Quality Control Procedure.

3.4.1 Data Validation When Both CO_2 and O_2 Are Measured. Although in most instances, only CO_2 or O_2 measurement is required, it is recommended that both CO_2 and O_2 be measured to provide a check on the quality of the data. The following quality control procedure is suggested.

NOTE. —Since the method for validating the CO_2 and O_2 analyses is based on combustion of organic and fossil fuels and dilution of the gas stream with air, this method does not apply to sources that (1) remove CO_2 or O_2 through processes other than combustion, (2) add O_2 (e.g., oxygen enrichment) and N_2 in proportions different from that of air, (3) add CO_2 (e.g., cement or lime kilns) or (4) have no fuel factor, F_o, values obtainable (e.g., extremely variable waste mixtures). This method validates the measured proportions of CO_2 and O_2 for fuel type, but the method does not detect sample dilution resulting from leaks during or after sample collection. The method is applicable for samples collected downstream of most lime or limestone flue-gas desulfurization units as the CO_2 added or removed from the gas stream is not significant in relation to the total CO_2 concentration. The CO_2 concentrations from other types of scrubbers using only water or basic slurry can be significantly affected and would render the F_o check minimally useful.

3.4.1.1 Calculate a fuel factor, F_o, using the following equation:

$$F_o = \frac{20.9 - \%O_2}{\%CO_2} \qquad \text{Eq. 3B-1}$$

where:

$\%O_2$=Percent O_2 by volume, dry basis.
$\%CO_2$=Percent CO_2 by volume, dry basis.
20.9=Percent O_2 by volume in ambient air.

If CO present in quantities measurable by this method, adjust the O_2 and CO_2 values before performing the calculation for F_0 as follows:

$\%CO_2$ (adj) = $\%CO_2$ + %CO
$\%O_2$ (adj) = $\%O_2$ − 0.5 %CO
where:

%5CO = Percent CO by volume, dry basis.

3.4.1.2 Compare the calculated F_0 factor with the expected F_0 values. The following table may be used in establishing acceptable ranges for the expected F_0 if the fuel being burned is known. When fuels are burned in combinations, calculate the combined fuel F_d and F_c factors (as defined in Method 19) according to the procedure in Method 19, Section 5.2.3. Then calculate the F_0 factor as follows:

$$F_0 = \frac{0.209\ F_d}{F_c} \qquad \text{Eq. 3B-2}$$

Fuel type	F_o range
Coal:	
Anthracite and lignite	1.016–1.130
Bituminous	1.083–1.230
Oil:	
Distillate	1.260–1.413
Residual	1.210–1.370
Gas:	
Natural	1.600–1.836
Propane	1.434–1.586
Butane	1.405–1.553
Wood	1.000–1.120
Wood bark	1.003–1.130

3.4.1.3 Calculated F_0 values, beyond the acceptable ranges shown in this table, should be investigated before accepting the test results. For example, the strength of the solutions in the gas analyzer and the analyzing technique should be checked by sampling and analyzing a known concentration, such as air; the fuel factor should be reviewed and verified. An acceptability range of ±12 percent is appropriate for the F_0 factor of mixed fuels with variable fuel ratios. The level of the emission rate relative to the compliance level should be considered in determining if a retest is appropriate, i.e., if the measured emissions are much lower or much greater than the compliance limit, repetition of the test would not significantly change the compliance status of the source and would be unnecessarily time consuming and costly.

4. CALCULATIONS

4.1 Nomenclature. Same as Section 5 of Method 3 with the addition of the following:

%EA = Percent excess air.
0.264 = Ratio of O_2 to N_2 in air, v/v.

4.2 Percent Excess Air. Calculate the percent excess air (if applicable) by substituting the appropriate values of percent O_2, CO, and N_2 (obtained from Section 3.1.3 or 3.2.4) into Equation 3B–3.

$$\%EA = \frac{\%O_2 - 0.5\ \%CO}{0.264\ \%N_2 - (\%O_2 - 0.5\ \%CO)} \times 100 \qquad \text{Eq. 3B-3}$$

NOTE. The equation above assumes that ambient air is used as the source of O_2 and that the fuel does not contain appreciable amounts of N_2 (as do coke oven or blast furnace gases). For those cases when appreciable amounts of N_2 are present (coal, oil and natural gas do not contain appreciable amounts of N_2) or when oxygen enrichment is used, alternative methods, subject to approval of the Administrator, are required.

5. BIBLIOGRAPHY

Same as Method 3.

METHOD 3C—DETERMINATION OF CARBON DIOXIDE, METHANE, NITROGEN, AND OXYGEN FROM STATIONARY SOURCES

1. Applicability and Principle

1.1 Applicability. This method applies to the analysis of carbon dioxide (CO_2), methane (CH_4), nitrogen (N_2), and oxygen (O_2) in samples from municipal solid waste landfills and other sources when specified in an applicable subpart.

1.2 Principle. A portion of the sample is injected into a gas chromatograph (GC) and the CO_2, CH_4, N_2, and O_2 concentrations are determined by using a thermal conductivity detector (TCD) and integrator.

2. Range and Sensitivity

2.1 Range. The range of this method depends upon the concentration of samples. The analytical range of TCD's is generally between approximately 10 ppmv and the upper percent range.

2.2 Sensitivity. The sensitivity limit for a compound is defined as the minimum detectable concentration of that compound, or the concentration that produces a signal-to-noise ratio of three to one. For CO_2, CH_4, N_2, and O_2, the sensitivity limit is in the low ppmv range.

3. Interferences

Since the TCD exhibits universal response and detects all gas components except the carrier, interferences may occur. Choosing the appropriate GC or shifting the retention times by changing the column flow rate may help to eliminate resolution interferences.

To assure consistent detector response, helium is used to prepare calibration gases. Frequent exposure to samples or carrier gas containing oxygen may gradually destroy filaments.

4. Apparatus

4.1 Gas Chromatograph. GC having at least the following components:

4.1.1 Separation Column. Appropriate column(s) to resolve CO_2, CH_4, N_2, O_2, and other gas components that may be present in the sample.

4.1.2 Sample Loop. Teflon or stainless steel tubing of the appropriate diameter. NOTE: Mention of trade names or specific products does not constitute endorsement or recommendation by the U. S. Environmental Protection Agency.

4.1.3 Conditioning System. To maintain the column and sample loop at constant temperature.

4.1.4 Thermal Conductivity Detector.

4.2 Recorder. Recorder with linear strip chart. Electronic integrator (optional) is recommended.

4.3 Teflon Tubing. Diameter and length determined by connection requirements of cylinder regulators and the GC.

4.4 Regulators. To control gas cylinder pressures and flow rates.

4.5 Adsorption Tubes. Applicable traps to remove any O_2 from the carrier gas.

5. Reagents

5.1 Calibration and Linearity Gases. Standard cylinder gas mixtures for each compound of interest with at least three concentration levels spanning the range of suspected sample concentrations. The calibration gases shall be prepared in helium.

5.2 Carrier Gas. Helium, high-purity.

6. Analysis

6.1 Sample Collection. Use the sample collection procedures described in Methods 3 or 25C to collect a sample of landfill gas (LFG).

6.2 Preparation of GC. Before putting the GC analyzer into routine operation, optimize the operational conditions according to the manufacturer's specifications to provide good resolution and minimum analysis time. Establish the appropriate carrier gas flow and set the detector sample and reference cell flow rates at exactly the same levels. Adjust the column and detector temperatures to the recommended levels. Allow sufficient time for temperature stabilization. This may typically require 1 hour for each change in temperature.

6.3 Analyzer Linearity Check and Calibration. Perform this test before sample analysis. Using the gas mixtures in section 5.1, verify the detector linearity over the range of suspected sample concentrations with at least three points per compound of interest. This initial check may also serve as the initial instrument calibration. All subsequent calibrations may be performed using a single-point standard gas provided the calibration point is within 20 percent of the sample component concentration. For each instrument calibration, record the carrier and detector flow rates, detector filament and block temperatures, attenuation factor, injection time, chart speed, sample loop volume, and component concentrations. Plot a linear regression of the standard concentrations versus area values to obtain the response factor of each compound. Alternatively, response factors of uncorrected component concentrations (wet basis) may be generated using instrumental integration. NOTE: Peak height may be used instead of peak area throughout this method.

6.4 Sample Analysis. Purge the sample loop with sample, and allow to come to atmospheric pressure before each injection.

Analyze each sample in duplicate, and calculate the average sample area (A). The results are acceptable when the peak areas for two consecutive injections agree within 5 percent of their average. If they do not agree, run additional samples until consistent area data are obtained. Determine the tank sample concentrations according to section 7.2.

7. Calculations

Carry out calculations retaining at least one extra decimal figure beyond that of the acquired data. Round off results only after the final calculation.

7.1 Nomenclature.

A = average sample area
B_w = moisture content in the sample, fraction
C = component concentration in the sample, dry basis, ppmv
C_t = calculated NMOC concentration, ppmv C equivalent
C_{tm} = measured NMOC concentration, ppmv C equivalent
P_{bar} = barometric pressure, mm Hg
P_{ti} = gas sample tank pressure after evacuation, mm Hg absolute
P_t = gas sample tank pressure after sampling, but before pressurizing, mm Hg absolute
P_{tf} = final gas sample tank pressure after pressurizing, mm Hg absolute
P_w = vapor pressure of H_2O (from table 3C–1), mm Hg
T_{ti} = sample tank temperature before sampling, °K
T_t = sample tank temperature at completion of sampling, °K
T_{tf} = sample tank temperature after pressurizing, °K
r = total number of analyzer injections of sample tank during analysis (where j = injection number, 1 . . . r)
R = Mean calibration response factor for specific sample component, area/ppmv

TABLE 3C–1.—MOISTURE CORRECTION

Temperature °C	Vapor Pressure of H_2O, mm Hg
4	6.1
6	7.0
8	8.0
10	9.2
12	10.5
14	12.0
16	13.6
18	15.5
20	17.5
22	19.8
24	22.4
26	25.2
28	28.3
30	31.8

7.2 Concentration of Sample Components. Calculate C for each compound using Equations 3C–1 and 3C–2. Use the temperature and barometric pressure at the sampling site to calculate Bw. If the sample was diluted with helium using the procedures in Method 25C, use Equation 3C–3 to calculate the concentration.

$$B_w = \frac{P_w}{P_{bar}} \qquad 3C\text{-}1$$

$$C = \frac{A}{R\left(1 - B_w\right)} \qquad 3C\text{-}2$$

$$C = \frac{\dfrac{P_{tf}}{T_{tf}}}{\dfrac{P_t}{T_t} - \dfrac{P_{ti}}{T_{ti}}} \qquad \frac{A}{R\left(1 - B_w\right)} \qquad 3C\text{-}3$$

8. Bibliography

1. McNair, H.M., and E.J. Bonnelli. Basic Gas Chromatography. Consolidated Printers, Berkeley, CA. 1969.

METHOD 4—DETERMINATION OF MOISTURE CONTENT IN STACK GASES

1. *Principle and Applicability*

1.1 Principle. A gas sample is extracted at a constant rate from the source; moisture is removed from the sample stream and determined either volumetrically or gravimetrically.

1.2 Applicability. This method is applicable for determining the moisture content of stack gas.

Two procedures are given. The first is a reference method, for accurate determinations of moisture content (such as are needed to calculate emission data). The second is an approximation method, which provides estimates of percent moisture to aid in setting isokinetic sampling rates prior to a pollutant emission measurement run. The approximation method described herein is only a suggested approach; alternative means for approximating the moisture content, e.g., drying tubes, wet bulb-dry bulb techniques, condensation techniques, stoichiometric calculations, previous experience, etc., are also acceptable.

The reference method is often conducted simultaneously with a pollutant emission measurement run; when it is, calculation of percent isokinetic, pollutant emission rate, etc., for the run shall be based upon the results of the reference method or its equivalent; these calculations shall not be based

upon the results of the approximation method, unless the approximation method is shown, to the satisfaction of the Administrator, U.S. Environmental Protection Agency, to be capable of yielding results within 1 percent H_2O of the reference method.

NOTE: The reference method may yield questionable results when applied to saturated gas streams or to streams that contain water droplets. Therefore, when these conditions exist or are suspected, a second determination of the moisture content shall be made simultaneously with the reference method, as follows: Assume that the gas stream is saturated. Attach a temperature sensor [capable of measuring to ±1 °C (2 °F)] to the reference method probe. Measure the stack gas temperature at each traverse point (see Section 2.2.1) during the reference method traverse; calculate the average stack gas temperature. Next, determine the moisture percentage, either by: (1) using a psychrometric chart and making appropriate corrections if stack pressure is different from that of the chart, or (2) using saturation vapor pressure tables. In cases where the pyschrometric chart or the saturation vapor pressure tables are not applicable (based on evaluation of the process), alternative methods, subject to the approval of the Administrator, shall be used.

2. *Reference Method*

The procedure described in Method 5 for determining moisture content is acceptable as a reference method.

2.1 Apparatus. A schematic of the sampling train used in this reference method is shown in Figure 4–1. All components shall be maintained and calibrated according to the procedure outlined in Method 5.

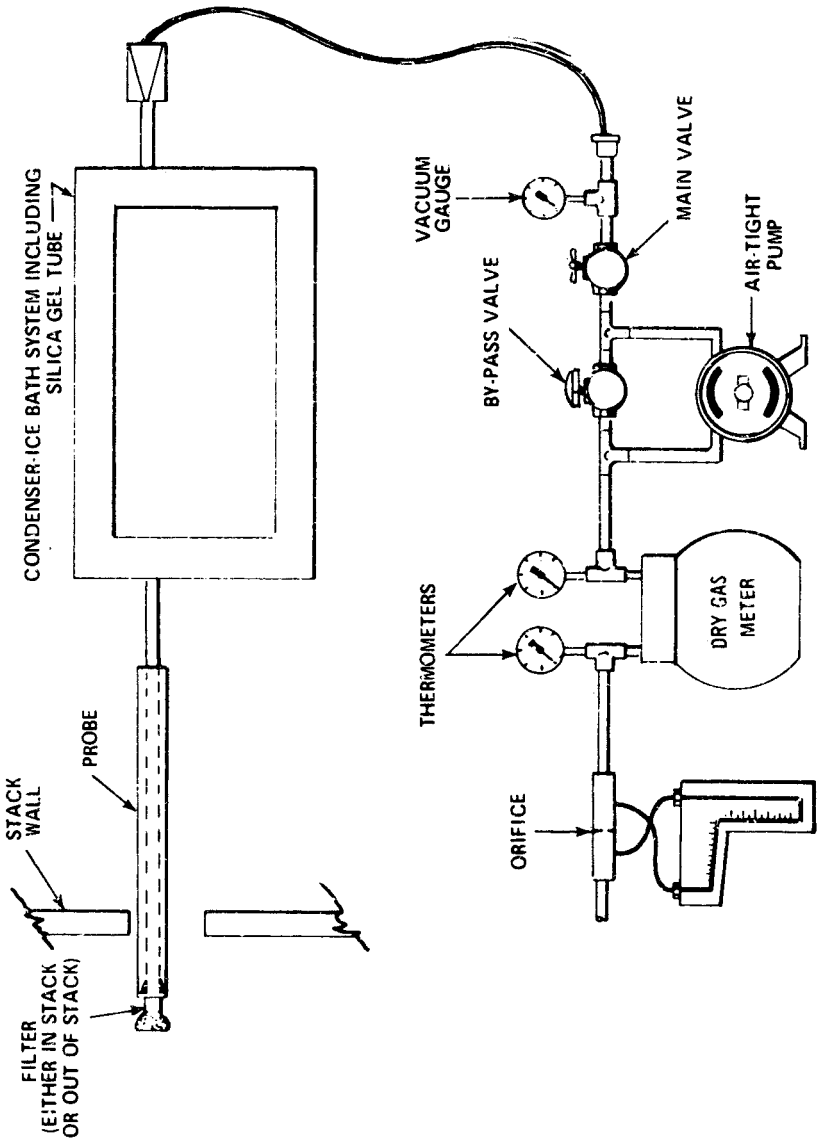

Figure 4-1. Moisture sampling train-reference method.

2.1.1 Probe. The probe is constructed of stainless steel or glass tubing, sufficiently heated to prevent water condensation, and is equipped with a filter, either in-stack (e.g., a plug of glass wool inserted into the end of the probe) or heated out-stack (e.g., as described in Method 5), to remove particular matter.

When stack conditions permit, other metals or plastic tubing may be used for the probe, subject to the approval of the Administrator.

2.1.2 Condenser. The condenser consists of four impingers connected in series with ground glass, leak-free fittings or any similarly leak-free non-contaminating fittings. The first, third, and fourth impingers shall

be of the Greenburg-Smith design, modified by replacing the tip with a 1.3 centimeter (½ inch) ID glass tube extending to about 1.3 cm (½ in.) from the bottom of the flask. The second impinger shall be of the Greenburg-Smith design with the standard tip. Modifications (e.g., using flexible connections between the impingers, using materials other than glass, or using flexible vacuum lines to connect the filter holder to the condenser) may be used, subject to the approval of the Administrator.

The first two impingers shall contain known volumes of water, the third shall be empty, and the fourth shall contain a known weight of 6- to 16-mesh indicating type silica gel, or equivalent desiccant. If the silica gel has been previously used, dry at 175 °C (350 °F) for 2 hours. New silica gel may be used as received. A thermometer, capable of measuring temperature to within 1 °C (2 °F), shall be placed at the outlet of the fourth impinger, for monitoring purposes.

Alternatively, any system may be used (subject to the approval of the Administrator) that cools the sample gas stream and allows measurement of both the water that has been condensed and the moisture leaving the condenser, each to within 1 ml or 1 g. Acceptable means are to measure the condensed water, either gravimetrically or volumetrically, and to measure the moisture leaving the condenser by: (1) monitoring the temperature and pressure at the exit of the condenser and using Dalton's law of partial pressures, or (2) passing the sample gas stream through a tared silica gel (or equivalent desiccant) trap, with exit gases kept below 20 °C (68 °F), and determining the weight gain.

If means other than silica gel are used to determine the amount of moisture leaving the condenser, it is recommended that silica gel (or equivalent) still be used between the condenser system and pump, to prevent moisture condensation in the pump and metering devices and to avoid the need to make corrections for moisture in the metered volume.

2.1.3 Cooling System. An ice bath container and crushed ice (or equivalent) are used to aid in condensing moisture.

2.1.4 Metering System. This system includes a vacuum gauge, leak-free pump, thermometers capable of measuring temperature to within 3 °C (5.4 °F), dry gas meter capable of measuring volume to within 2 percent, and related equipment as shown in Figure 4–1. Other metering systems, capable of maintaining a constant sampling rate and determining sample gas volume, may be used, subject to the approval of the Administrator.

2.1.5 Barometer. Mercury, aneroid, or other barometer capable of measuring atmospheric pressure to within 2.5 mm Hg (0.1 in. Hg) may be used. In many cases, the barometric reading may be obtained from a nearby National Weather Service station, in which case the station value (which is the absolute barometric pressure) shall be requested and an adjustment for elevation differences between the weather station and the sampling point shall be applied at a rate of minus 2.5 mm Hg (0.1 in. Hg) per 30 m (100 ft) elevation increase or vice versa for elevation decrease.

2.1.6 Graduated Cylinder and/or Balance. These items are used to measure condensed water and moisture caught in the silica gel to within 1 ml or 0.5 g. Graduated cylinders shall have subdivisions no greater than 2 ml. Most laboratory balances are capable of weighing to the nearest 0.5 g or less. These balances are suitable for use here.

2.2 Procedure. The following procedure is written for a condenser system (such as the impinger system described in Section 2.1.2) incorporating volumetric analysis to measure the condensed moisture, and silica gel and gravimetric analysis to measure the moisture leaving the condenser.

2.2.1 Unless otherwise specified by the Administrator, a minimum of eight traverse points shall be used for circular stacks having diameters less than 0.61 m (24 in.), a minimum of nine points shall be used for rectangular stacks having equivalent diameters less than 0.61 m (24 in.), and a minimum of twelve traverse points shall be used in all other cases. The traverse points shall be located according to Method 1. The use of fewer points is subject to the approval of the Administrator. Select a suitable probe and probe length such that all traverse points can be sampled. Consider sampling from opposite sides of the stack (four total sampling ports) for large stacks, to permit use of shorter probe lengths. Mark the probe with heat resistant tape or by some other method to denote the proper distance into the stack or duct for each sampling point. Place known volumes of water in the first two impingers. Weigh and record the weight of the silica gel to the nearest 0.5 g, and transfer the silica gel to the fourth impinger; alternatively, the silica gel may first be transferred to the impinger, and the weight of the silica gel plus impinger recorded.

2.2.2 Select a total sampling time such that a minimum total gas volume of 0.60 scm (21 scf) will be collected, at a rate no greater than 0.021 m^3/min (0.75 cfm). When both moisture content and pollutant emission rate are to be determined, the moisture determination shall be simultaneous with, and for the same total length of time as, the pollutant emission rate run, unless otherwise specified in an applicable subpart of the standards.

2.2.3 Set up the sampling train as shown in Figure 4–1. Turn on the probe heater and (if applicable) the filter heating system to

temperatures of about 120 °C (248 °F), to prevent water condensation ahead of the condenser; allow time for the temperatures to stabilize. Place crushed ice in the ice bath container. It is recommended, but not required, that a leak check be done, as follows: Disconnect the probe from the first impinger or (if applicable) from the filter holder. Plug the inlet to the first impinger (or filter holder) and pull a 380 mm (15 in.) Hg vacuum; a lower vacuum may be used, provided that it is not exceeded during the test. A leakage rate in excess of 4 percent of the average sampling rate or 0.00057 m^3/min (0.02 cfm), whichever is less, is unacceptable. Following the leak check, reconnect the probe to the sampling train.

2.2.4 During the sampling run, maintain a sampling rate within 10 percent of constant rate, or as specified by the Administrator. For each run, record the data required on the example data sheet shown in Figure 4–2. Be sure to record the dry gas meter reading at the beginning and end of each sampling time increment and whenever sampling is halted. Take other appropriate readings at each sample point, at least once during each time increment.

2.2.5 To begin sampling, position the probe tip at the first traverse point. Immediately start the pump and adjust the flow to the desired rate. Traverse the cross section, sampling at each traverse point for an equal length of time. Add more ice and, if necessary, salt to maintain a temperature of less 20 °C (68 °F) at the silica gel outlet.

2.2.6 After collecting the sample, disconnect the probe from the filter holder (or from the first impinger) and conduct a leak check (mandatory) as described in Section 2.2.3. Record the leak rate. If the leakage rate exceeds the allowable rate, the tester shall either reject the test results or shall correct the sample volume as in Section 6.3 of Method 5. Next, measure the volume of the moisture condensed to the nearest ml. Determine the increase in weight of the silica gel (or silica gel plus impinger) to the nearest 0.5 g. Record this information (see example data sheet, Figure 4–3) and calculate the moisture percentage, as described in 2.3 below.

2.2.7 A quality control check of the volume metering system at the field site is suggested before collecting the sample following the procedure in Method 5, Section 4.4

2.3 Calculations. Carry out the following calculations, retaining at least one extra decimal figure beyond that of the acquired data. Round off figures after final calculation.

FIGURE 4–2—FIELD MOISTURE DETERMINATION REFERENCE METHOD

Plant .....
Location .....
Operator .....
Date .....
Run No. .....
Ambient temperature .....
Barometric pressure .....
Probe length m (ft) .....

SCHEMATIC OF STACK CROSS SECTION

Traverse point number	Sampling time	Stack temperature	Pressure differential across orifice meter ΔH	Meter reading gas sample volume	ΔV_m	Gas Sample temperature at dry gas meter		Temperaturem of gas leaving condenser or last impinger
						Inlet	Outlet	
	(θ), min.	°C (°F)	mm (in.) H_2O	m^3 (ft^3)	m^3 (ft^3)	(Tm_{in}), °C (°F)	(Tm_{out}), °C (°F)	°C (°F)
Total.								
Average.								

FIGURE 4–3—ANALYTICAL DATA—REFERENCE METHOD

	Impinger volume, ml	Silica gel weight, g
Final		
Initial		
Difference		

2.3.1 Nomenclature.

B_{ws}=Proportion of water vapor, by volume, in the gas stream.
M_w=Molecular weight of water, 18.0 g/g-mole (18.0 lb/lb-mole).
P_m=Absolute pressure (for this method, same as barometric pressure) at the dry gas meter, mm Hg (in. Hg).
P_{std}=Standard absolute pressure, 760 mm Hg (29.92 in. Hg).
R=Ideal gas constant, 0.06236 (mm Hg) (m^3)/(g-mole) (°K) for metric units and 21.85 (in. Hg) (ft^3)/(lb-mole) (°R) for English units.
T_m=Absolute temperature at meter, °K (°R).
T_{std}=Standard absolute temperature, 293°K (528°R).
V_m=Dry gas volume measured by dry gas meter, dcm (dcf).
ΔV_m=Incremental dry gas volume measured by dry gas meter at each traverse point, dcm (dcf).
$V_{m(std)}$=Dry gas volume measured by the dry gas meter, corrected to standard conditions, dscm (dscf).
$V_{wc(std)}$=Volume of water vapor condensed corrected to standard conditions, scm (scf).
$V_{wsg(std)}$=Volume of water vapor collected in silica gel corrected to standard conditions, scm (scf).
V_f=Final volume of condenser water, ml.
V_i=Initial volume, if any, of condenser water, ml.
W_f=Final weight of silica gel or silica gel plus impinger, g.
W_i=Initial weight of silica gel or silica gel plus impinger, g.
Y=Dry gas meter calibration factor.
ρ_w=Density of water, 0.9982 g/ml (0.002201 lb/ml).

2.3.2 Volume of Water Vapor Condensed.

$$V_{wc(std)} = \frac{(V_f - V_i)\rho_w R T_{std}}{P_{std} M_w} = K_1 (V_f - V_i) \qquad \text{Eq. 4-1}$$

Where:

K_1=0.001333 m^3/ml for metric units
=0.04707 ft^3/ml for English units

2.3.3 Volume of Water Vapor Collected in Silica Gel.

$$V_{wsg(std)} = \frac{(W_f - W_i) R T_{std}}{P_{std} M_w} = K_2 (W_f - W_i) \qquad \text{Eq. 4-2}$$

Where:

K_2=0.001335 m^3/g for metric units
=0.04715 ft^3/g for English units

2.3.4 Sample Gas Volume.

$$V_{m(std)} = V_m Y \frac{(P_m)(T_{std})}{(P_{std})(T_m)} = K_3 Y \frac{V_m P_m}{T_m} \qquad \text{Eq. 4-3}$$

Where:

K_3=0.3858 °K/mm Hg for metric units
=17.64 °R/in. Hg for English units

NOTE: If the post-test leak rate (Section 2.2.6) exceeds the allowable rate, correct the value of V_m in Equation 4–3, as described in Section 6.3 of Method 5.

2.3.5 Moisture Content.

$$B_{ws} = \frac{V_{wc(std)} + V_{wsg(std)}}{V_{wc(std)} + V_{wsg(std)} + V_{m(std)}} \qquad \text{Eq. 4-4}$$

NOTE: In saturated or moisture droplet-laden gas streams, two calculations of the moisture content of the stack gas shall be made, one using a value based upon the saturated conditions (see Section 1.2), and another based upon the results of the impinger analysis. The lower of these two values of B_{ws} shall be considered correct.

2.3.6 Verification of Constant Sampling Rate. For each time increment, determine the ΔV_m. Calculate the average. If the value for any time increment differs from the average by more than 10 percent, reject the results and repeat the run.

3. *Approximation Method*

The approximation method described below is presented only as a suggested method (see Section 1.2).

3.1 Apparatus.

3.1.1 Probe. Stainless steel glass tubing, sufficiently heated to prevent water condensation and equipped with a filter (either in-stack or heated out-stack) to remove particulate matter. A plug of glass wool, inserted into the end of the probe, is a satisfactory filter.

3.1.2 Impingers. Two midget impingers, each with 30 ml capacity, or equivalent.

3.1.3 Ice Bath. Container and ice, to aid in condensing moisture in impingers.

3.1.4 Drying Tube. Tube packed with new or regenerated 6- to 16-mesh indicating-type silica gel (or equivalent desiccant), to dry the sample gas and to protect the meter and pump.

3.1.5 Valve. Needle valve, to regulate the sample gas flow rate.

3.1.6 Pump. Leak-free, diaphragm type, or equivalent, to pull the gas sample through the train.

3.1.7 Volume Meter. Dry gas meter, sufficiently accurate to measure the sample volume within 2%, and calibrated over the range of flow rates and conditions actually encountered during sampling.

3.1.8 Rate Meter. Rotameter, to measure the flow range from 0 to 3 lpm (0 to 0.11 cfm).

3.1.9 Graduated Cylinder. 25 ml.

3.1.10 Barometer. Mercury, aneroid, or other barometer, as described in Section 2.1.5 above.

3.1.11 Vacuum Gauge. At least 760 mm Hg (30 in. Hg) gauge, to be used for the sampling leak check.

3.2 Procedure.

3.2.1 Place exactly 5 ml distilled water in each impinger.

Leak check the sampling train as follows: Temporarily insert a vacuum gauge at or near the probe inlet; then, plug the probe inlet and pull a vacuum of at least 250 mm Hg (10 in. Hg). Note the time rate of change of the dry gas meter dial; alternatively, a rotameter (0–40 cc/min) may be temporarily attached to the dry gas meter outlet to determine the leakage rate. A leak rate not in excess of 2 percent of the average sampling rate is acceptable.

NOTE: Carefully release the probe inlet plug before turning off the pump.

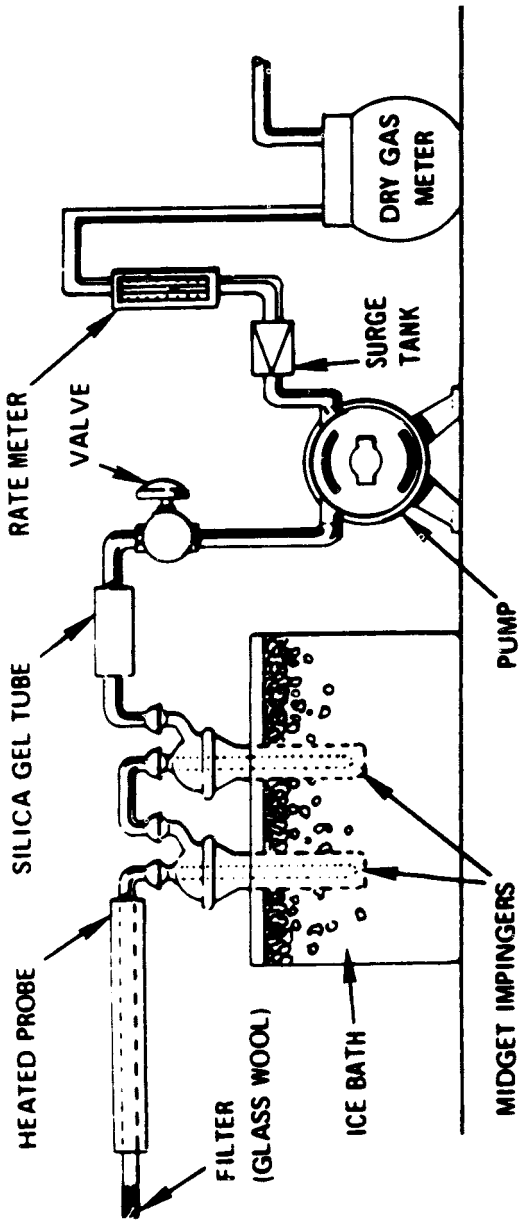

Figure 4-4. Moisture-sampling train - approximation method.

FIGURE 4–5—FIELD MOISTURE DETERMINATION—APPROXIMATION METHOD

FIGURE 4–5—FIELD MOISTURE DETERMINATION—APPROXIMATION METHOD

Location ..... Comments:
Test .....
Date .....
Operator .....
Barometric pressure .....

Clock time	Gas volume through meter, (V_m), m^3 (ft^3)	Rate meter setting m^3/min (ft^3/min)	Meter temperature, °C (°F)

3.2.2 Connect the probe, insert it into the stack, and sample at a constant rate of 2 lpm (0.071 cfm). Continue sampling until the dry gas meter registers about 30 liters (1.1 ft^3) or until visible liquid droplets are carried over from the first impinger to the second. Record temperature, pressure, and dry gas meter readings as required by Figure 4–5.

3.2.3 After collecting the sample, combine the contents of the two impingers and measure the volume to the nearest 0.5 ml.

3.3 Calculations. The calculation method presented is designed to estimate the moisture in the stack gas; therefore, other data, which are only necessary for accurate moisture determinations, are not collected. The following equations adequately estimate the moisture content, for the purpose of determining isokinetic sampling rate settings.

3.3.1 Nomenclature.

B_{wm}=Approximate proportion, by volume, of water vapor in the gas stream leaving the second impinger, 0.025.

B_{ws}=Water vapor in the gas stream, proportion by volume.

M_w=Molecular weight of water, 18.0 g/g-mole (18.0 lb/lb-mole).

P_m=Absolute pressure (for this method, same as barometric pressure) at the dry gas meter.

P_{std}=Standard absolute pressure, 760 mm Hg (29.92 in. Hg).

R=Ideal gas constant, 0.06236 (mm Hg) (m^3)/(g-mole) (°K) for metric units and 21.85 (in. Hg) (ft^3)/lb-mole) (°R) for English units.

T_m=Absolute temperature at meter, °K (°R).

T_{std}=Standard absolute temperature, 293°K (528° R).

V_f=Final volume of impinger contents, ml.

V_i=Initial volume of impinger contents, ml.

V_m=Dry gas volume measured by dry gas meter, dcm (dcf).

$V_{m(std)}$=Dry gas volume measured by dry gas meter, corrected to standard conditions, dscm (dscf).

$V_{wc(std)}$=Volume of water vapor condensed, corrected to standard conditions, scm (scf).

ρ_w=Density of water, 0.9982 g/ml (0.002201 lb/ml).

Y=Dry gas meter calibration factor.

3.3.2 Volume of Water Vapor Collected.

$$V_{wc} = \frac{(V_f - V_i)\rho_w R T_{std}}{P_{std} M_w} = K_1(V_f - V_i) \qquad \text{Eq. 4-5}$$

Where:

K_1=0.001333 m^3/ml for metric units
=0.04707 ft^3/ml for English units.

3.3.3 Gas Volume.

$$V_{m(std)} = V_m\left(\frac{P_m}{P_{std}}\right)\left(\frac{T_{std}}{T_m}\right) = K_2\frac{V_m P_m}{T_m}$$

Equation 4-6

where:

K_2=0.3858 °K/mm Hg for metric units
=17.64 °R/in. Hg for English units

3.3.4 Approximate Moisture Content.

$$B_{ws} = \frac{V_{wc}}{V_{wc} + V_{m(std)}} + B_{wm} = \frac{V_{wc}}{V_{wc} + V_{m(std)}} + (0.025)$$

Equation 4-7

4. *Calibration*

4.1 For the reference method, calibrate equipment as specified in the following sections of Method 5: Section 5.3 (metering system); Section 5.5 (temperature gauges); and Section 5.7 (barometer). The recommended leak check of the metering system (Section 5.6 of Method 5) also applies to the reference method. For the approximation method, use the procedures outlined in Section 5.1.1 of Method 6 to calibrate the metering system, and the procedure of Method 5, Section 5.7 to calibrate the barometer.

5. *Bibliography*

1. Air Pollution Engineering Manual (Second Edition). Danielson, J. A. (ed.). U.S. Environmental Protection Agency, Office of Air Quality Planning and Standards. Research Triangle Park, NC. Publication No. AP–40. 1973.

2. Devorkin, Howard. et al. Air Pollution Source Testing Manual. Air Pollution Control District, Los Angeles, CA. November, 1963.

3. Methods for Determination of Velocity, Volume, Dust and Mist Content of Gases. Western Precipitation Division of Joy Manufacturing Co., Los Angeles, CA. Bulletin WP–50. 1968.

METHOD 5—DETERMINATION OF PARTICULATE EMISSIONS FROM STATIONARY SOURCES

1. *Principle and Applicability*

1.1 Principle. Particulate matter is withdrawn isokinetically from the source and collected on a glass fiber filter maintained at a temperature in the range of 120±14 °C (248±25 °F) or such other temperature as specified by an applicable subpart of the standards or approved by Administrator, U.S. Environmental Protection Agency, for a particular application. The particulate mass, which includes any material that condenses at or above the filtration temperature, is determined gravimetrically after removal of uncombined water.

1.2 Applicability. This method is applicable for the determination of particulate emissions from stationary sources.

2. *Apparatus*

2.1 Sampling Train. A schematic of the sampling train used in this method is shown in Figure 5–1. Complete construction details are given in APTD–0581 (Citation 2 in Bibliography); commercial models of this train are also available. For changes from APTD–0581 and for allowable modifications of the train shown in Figure 5–1, see the following subsections.

The operating and maintenance procedures for the sampling train are described in APTD–0576 (Citation 3 in Bibliography). Since correct usage is important in obtaining valid results, all users should read APTD–0576 and adopt the operating and maintenance procedures outlined in it, unless otherwise specified herein. The sampling train consists of the following components:

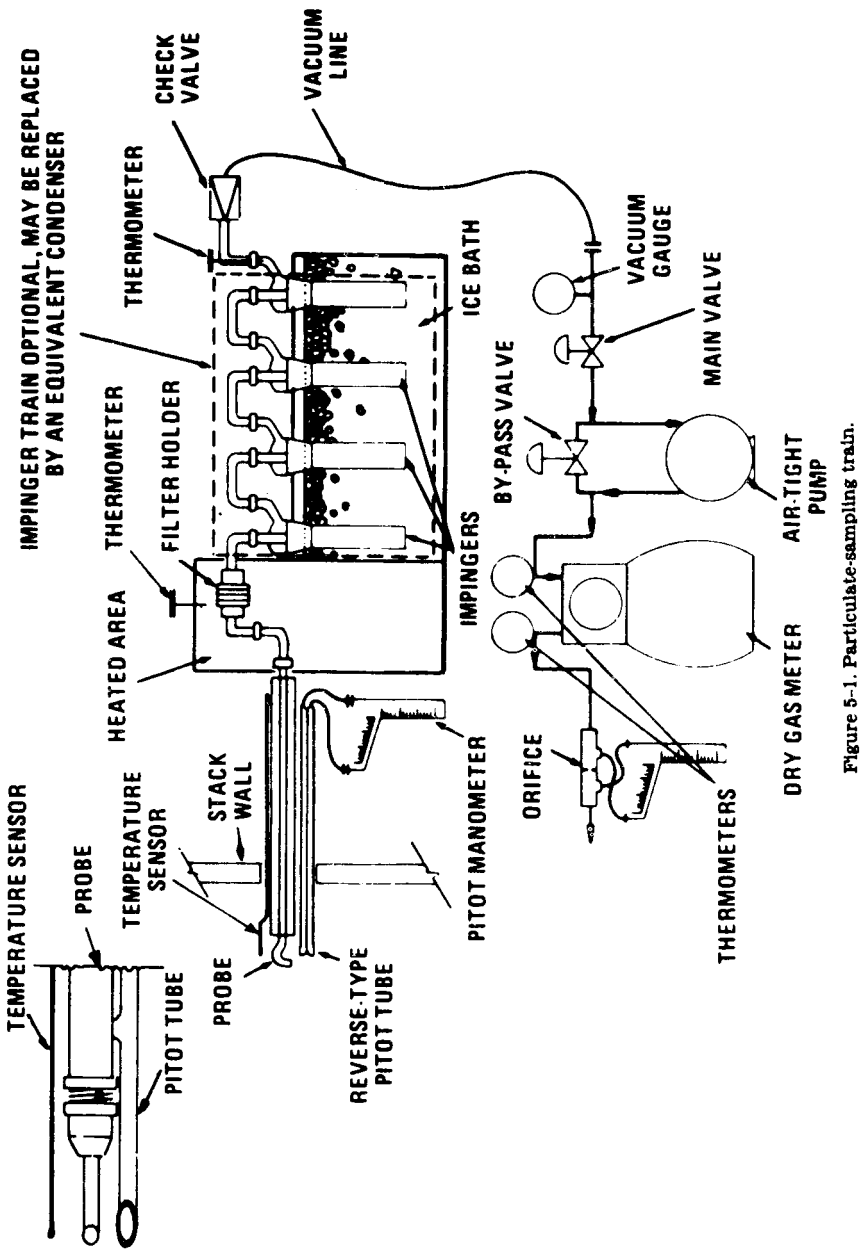

Figure 5-1. Particulate-sampling train.

2.1.1 Probe Nozzle. Stainless steel (316) or glass with sharp, tapered leading edge. The angle of taper shall be ≤30° and the taper shall be on the outside to preserve a constant internal diameter. The probe nozzle shall be of the button-hook or elbow design, unless otherwise specified by the Administrator. If made of stainless steel, the nozzle

shall be constructed from seamless tubing; other materials of construction may be used, subject to the approval of the Administrator.

A range of nozzle sizes suitable for isokinetic sampling should be available, e.g., 0.32 to 1.27 cm (⅛ to ½ in.)—or larger if higher volume sampling trains are used—inside diameter (ID) nozzles in increments of 0.16 cm (1/16 in.). Each nozzle shall be calibrated according to the procedures outlined in Section 5.

2.1.2 Probe Liner. Borosilicate or quartz glass tubing with a heating system capable of maintaining a gas temperature at the exit end during sampling of 120±14 °C (248±25 °F), or such other temperature as specified by an applicable subpart of the standards or approved by the Administrator for a particular application. (The tester may opt to operate the equipment at a temperature lower than that specified.) Since the actual temperature at the outlet of the probe is not usually monitored during sampling, probes constructed according to APTD–0581 and utilizing the calibration curves of APTD–0576 (or calibrated according to the procedure outlined in APTD–0576) will be considered acceptable.

Either borosilicate or quartz glass probe liners may be used for stack temperatures up to about 480 °C (900 °F); quartz liners shall be used for temperatures between 480 and 900 °C (900 and 1,650 °F). Both types of liners may be used at higher temperatures than specified for short periods of time, subject to the approval of the Administrator. The softening temperature for borosilicate is 820 °C (1,508 °F), and for quartz it is 1,500 °C (2,732 °F).

Whenever practical, every effort should be made to use borosilicate or quartz glass probe liners. Alternatively, metal liners (e.g., 316 stainless steel, Incoloy 825,[2]or other corrosion resistant metals) made of seamless tubing may be used, subject to the approval of the Administrator.

2.1.3 Pitot Tube. Type S, as described in Section 2.1 of Method 2, or other device approved by the Administrator. The pitot tube shall be attached to the probe (as shown in Figure 5–1) to allow constant monitoring of the stack gas velocity. The impact (high pressure) opening plane of the pitot tube shall be even with or above the nozzle entry plane (see Method 2, Figure 2–6b) during sampling. The Type S pitot tube assembly shall have a known coefficient, determined as outlined in Section 4 of Method 2.

2.1.4 Differential Pressure Gauge. Inclined manometer or equivalent device (two), as described in Section 2.2 of Method 2. One manometer shall be used or velocity head ($\Delta\beta$) readings, and the other, for orifice differential pressure readings.

2.1.5 Filter Holder. Borosilicate glass, with a glass frit filter support and a silicone rubber gasket. Other materials of construction (e.g., stainless steel, Teflon, Viton) may be used, subject to approval of the Administrator. The holder design shall provide a positive seal against leakage from the outside or around the filter. The holder shall be attached immediately at the outlet of the probe (or cyclone, it used).

2.1.6 Filter Heating System. Any heating system capable of maintaining a temperature around the filter holder during sampling of 120±14 °C (248±25 °F), or such other temperature as specified by an applicable subpart of the standards or approved by the Administrator for a particular application. Alternatively, the tester may opt to operate the equipment at a temperature lower than that specified. A temperature gauge capable of measuring temperature to within 3 °C (5.4 °F) shall be installed so that the temperature around the filter holder can be regulated and monitored during sampling. Heating systems other than the one shown in APTD–0581 may be used.

2.1.7 Condenser. The following system shall be used to determine the stack gas moisture content: Four impingers connected in series with leak-free ground glass fittings or any similar leak-free non-contaminating fittings. The first, third, and fourth impingers shall be of the Greenburg-Smith design, modified by replacing the tip with 1.3 cm (½ in.) ID glass tube extending to about 1.3 cm (½ in.) from the bottom of the flask. The second impinger shall be of the Greenburg-Smith design with the standard tip. Modifications (e.g., using flexible connections between the impingers, using materials other than glass, or using flexible vacuum lines to connect the filter holder to the condenser) may be used, subject to the approval of the Administrator. The first and second impingers shall contain known quantities of water (Section 4.1.3), the third shall be empty, and the fourth shall contain a known weight of silica gel, or equivalent desiccant. A thermometer, capable of measuring temperature to within 1 °C (2 °F) shall be placed at the outlet of the fourth impinger for monitoring purposes.

Alternatively, any system that cools the sample gas stream and allows measurement of the water condensed and moisture leaving the condenser, each to within 1 ml or 1 g may be used, subject to the approval of the Administrator. Acceptable means are to measure the condensed water either gravimetrically or volumetrically and to measure the moisture leaving the condenser by: (1) monitoring the temperature and pressure at the exit of the condenser and using Dalton's law of partial pressures; or (2) passing the sample has stream through a tared silica gel (or equivalent desiccant) trap with exit gases

[2] Mention of trade names or specific product does not constitute endorsement by the Environmental Protection Agency.

kept below 20 °C (68 °F) and determining the weight gain.

If means other than silica gel are used to determine the amount of moisture leaving the condenser, it is recommended that silica gel (or equivalent) still be used between the condenser system and pump to prevent moisture condensation in the pump and metering devices and to avoid the need to make corrections for moisture in the metered volume.

NOTE: If a determination of the particulate matter collected in the impingers is desired in addition to moisture content, the impinger system described above shall be used, without modification. Individual States or control agencies requiring this information shall be contacted as to the sample recovery and analysis of the impinger contents.

2.1.8 Metering System. Vacuum gauge, leak-free pump, thermometers capable of measuring temperature to within 3 °C (5.4 °F), dry gas meter capable of measuring volume to within 2 percent, and related equipment, as shown in Figure 5–1. Other metering systems capable of maintaining sampling rates within 10 percent of isokinetic and of determining sample volumes to within 2 percent may be used, subject to the approval of the Administrator. When the metering system is used in conjunction with a pitot tube, the system shall enable checks of isokinetic rates.

Sampling trains utilizing metering systems designed for higher flow rates than that decribed in APTD–0581 or APDT–0576 may be used provided that the specifications of this method are met.

2.1.9 Barometer. Mercury aneroid, or other barometer capable of measuring atmospheric pressure to within 2.5 mm Hg (0.1 in. Hg). In many cases the barometric reading may be obtained from a nearby National Weather Service station, in which case the station value (which is the absolute barometric pressure) shall be requested and an adjustment for elevation differences between the weather station and sampling point shall be applied at a rate of minus 2.5 mm Hg (0.1 in. Hg) per 30 m (100 ft) elevation increase or vice versa for elevation decrease.

2.1.10 Gas Density Determination Equipment. Temperature sensor and pressure gauge, as described in Sections 2.3 and 2.4 of Method 2, and gas analyzer, if necessary, as described in Method 3. The temperature sensor shall, preferably, be permanently attached to the pitot tube or sampling probe in a fixed configuration, such that the tip of the sensor extends beyond the leading edge of the probe sheath and does not touch any metal. Alternatively, the sensor may be attached just prior to use in the field. Note, however, that if the temperature sensor is attached in the field, the sensor must be placed in an interference-free arrangement with respect to the Type S pitot tube openings (see Method 2, Figure 2–7). As a second alternative, if a difference of not more than 1 percent in the average velocity measurement is to be introduced, the temperature gauge need not be attached to the probe or pitot tube. (This alternative is subject to the approval of the Administrator.)

2.2 Sample Recovery. The following items are needed.

2.2.1 Probe-Liner and Probe-Nozzle Brushes. Nylon bristle brushes with stainless steel wire handles. The probe brush shall have extensions (at least as long as the probe) of stainless steel, Nylon, Teflon, or similarly inert material. The brushes shall be properly sized and shaped to brush out the probe liner and nozzle.

2.2.2 Wash Bottles—Two. Glass wash bottles are recommended; polyethylene wash bottles may be used at the option of the tester. It is recommended that acetone not be stored in polyethylene bottles for longer than a month.

2.2.3 Glass Sample Storage Containers. Chemically resistant, borosilicate glass bottles, for acetone washes, 500 ml or 1000 ml. Screw cap liners shall either be rubber-backed Teflon or shall be constructed so as to be leak-free and resistant to chemical attack by acetone. (Narrow mouth glass bottles have been found to be less prone to leakage.) Alternatively, polyethylene bottles may be used.

2.2.4 Petri Dishes. For filter samples, glass or polyethylene, unless otherwise specified by the Administrator.

2.2.5 Graduated Cylinder and/or Balance. To measure condensed water to within 1 ml or 1 g. Graduated cylinders shall have subdivisions no greater than 2 ml. Most laboratory balances are capable of weighing to the nearest 0.5 g or less. Any of these balances is suitable or use here and in Section 2.3.4.

2.2.6 Plastic Storage Containers. Air-tight containers to store silica gel.

2.2.7 Funnel and Rubber Policeman. To aid in transfer of silica gel to container; not necessary if silica gel is weighed in the field.

2.2.8 Funnel. Glass or polyethylene, to aid in sample recovery.

2.3 Analysis. For analysis, the following equipment is needed.

2.3.1 Glass Weighing Dishes.

2.3.2 Desiccator.

2.3.3 Analytical Balance. To measure to within 0.1 mg.

2.3.4 Balance. To measure to within 0.5 g.

2.3.5 Beakers. 250 ml.

2.3.6 Hygrometer. To measure the relative humidity of the laboratory environment.

2.3.7 Temperature Gauge. To measure the temperature of the laboratory environment.

3. *Reagents*

3.1 Sampling. The reagents used in sampling are as follows:

3.1.1 Filters. Glass fiber filters, without organic binder, exhibiting at least 99.95 percent efficiency (<0.05 percent penetration) on 0.3-micron dioctyl phthalate smoke particles. The filter efficiency test shall be conducted in accordance with ASTM Standard Method D2986–71 (Reapproved 1978) (incorporated by reference—see §60.17). Test data from the supplier's quality control program are sufficient for this purpose. In sources containing SO_2 or SO_3, the filter material must be of a type that is unreactive to SO_2 or SO_3. Citation 10 in Bibliography, may be used to select the appropriate filter.

3.1.2 Silica Gel. Indicating type, 6 to 16 mesh. If previously used, dry at 175 °C (350 °F) for 2 hours. New silica gel may be used as received. Alternatively, other types of desiccants (equivalent or better) may be used, subject to the approval of the Administrator.

3.1.3 Water. When analysis of the material caught in the impingers is required, deionized distilled water shall be used. Run blanks prior to field use to eliminate a high blank on test samples.

3.1.4 Crushed Ice.

3.1.5 Stopcock Grease. Acetone-insoluble, heat-stable silicone grease. This is not necessary if screw-on connectors with Teflon sleeves, or similar, are used. Alternatively, other types of stopcock grease may be used, subject to the approval of the Administrator.

3.2 Sample Recovery. Acetone-reagent grade, ≤0.001 percent residue, in glass bottles—is required. Acetone from metal containers generally has a high residue blank and should not be used. Sometimes, suppliers transfer acetone to glass bottles from metal containers; thus, acetone blanks shall be run prior to field use and only acetone with low blank values (≤0.001 percent) shall be used. In no case shall a blank value of greater than 0.001 percent of the weight of acetone used be subtracted from the sample weight.

3.3 Analysis. Two reagents are required for the analysis:

3.3.1 Acetone. Same as 3.2.

3.3.2 Desiccant. Anhydrous calcium sulfate, indicating type. Alternatively, other types of desiccants may be used, subject to the approval of the Administrator.

4. *Procedure*

4.1 Sampling. The complexity of this method is such that, in order to obtain reliable results, testers should be trained and experienced with the test procedures.

4.1.1 Pretest Preparation. It is suggested that sampling equipment be maintained according to the procedure described in APTD–0576.

Weigh several 200 to 300 g portions of silica gel in air-tight containers to the nearest 0.5 g. Record the total weight of the silica gel plus container, on each container. As an alternative, the silica gel need not be preweighed, but may be weighed directly in the impinger or sampling holder just prior to train assembly.

Check filters visually against light for irregularities and flaws or pinhole leaks. Label filters of the proper diameter on the back side near the edge using numbering machine ink. As an alternative, label the shipping containers (glass or plastic petri dishes) and keep the filters in these containers at all times except during sampling and weighing.

Desiccate the filters at 20±5.6 °C (68±10 °F) and ambient pressure for at least 24 hours and weigh at intervals of at least 6 hours to a constant weight, i.e., 0.5 mg change from previous weighing; record results to the nearest 0.1 mg. During each weighing the filter must not be exposed to the laboratory atmosphere for a period greater than 2 minutes and a relative humidity above 50 percent. Alternatively (unless otherwise specified by the Administrator), the filters may be oven dried at 105 °C (220 °F) for 2 to 3 hours, desiccated for 2 hours, and weighed. Procedures other than those described, which account for relative humidity effects, may be used, subject to the approval of the Administrator.

4.1.2 Preliminary Determinations. Select the sampling site and the minimum number of sampling points according to Method 1 or as specified by the Administrator. Determine the stack pressure, temperature, and the range of velocity heads using Method 2; it is recommended that a leak-check of the pitot lines (see Method 2, Section 3.1) be performed. Determine the moisture content using Approximation Method 4 or its alternatives for the purpose of making isokinetic sampling rate settings. Determine the stack gas dry molecular weight, as described in Method 2, Section 3.6; if integrated Method 3 sampling is used for molecular weight determination, the integrated bag sample shall be taken simultaneously with, and for the same total length of time as, the particulate sample run.

Select a nozzle size based on the range of velocity heads, such that it is not necessary to change the nozzle size in order to maintain isokinetic sampling rates. During the run, do not change the nozzle size. Ensure that the proper differential pressure gauge is chosen for the range of velocity heads encountered (see Section 2.2 of Method 2).

Select a suitable probe liner and probe length such that all traverse points can be sampled. For large stacks, consider sampling from opposite sides of the stack to reduce the length of probes.

Select a total sampling time greater than or equal to the minimum total sampling time specified in the test procedures for the specific industry such that (1) the sampling time per point is not less than 2 min (or some greater time interval as specified by the Administrator), and (2) the sample volume taken (corrected to standard conditions)

will exceed the required minimum total gas sample volume. The latter is based on an approximate average sampling rate.

It is recommended that the number of minutes sampled at each point be an integer or an integer plus one-half minute, in order to avoid timekeeping errors. The sampling time at each point shall be the same.

In some circumstances, e.g., batch cycles, it may be necessary to sample for shorter times at the traverse points and to obtain smaller gas sample volumes. In these cases, the Administrator's approval must first be obtained.

4.1.3 Preparation of Collection Train. During preparation and assembly of the sampling train, keep all openings where contamination can occur covered until just prior to assembly or until sampling is about to begin.

Place 100 ml of water in each of the first two impingers, leave the third impinger empty, and transfer approximately 200 to 300 g of preweighed silica gel from its container to the fourth impinger. More silica gel may be used, but care should be taken to ensure that it is not entrained and carried out from the impinger during sampling. Place the container in a clean place for later use in the sample recovery. Alternatively, the weight of the silica gel plus impinger may be determined to the nearest 0.5 g and recorded.

Using a tweezer or clean disposable surgical gloves, place a labeled (identified) and weighed filter in the filter holder. Be sure that the filter is properly centered and the gasket properly placed so as to prevent the sample gas stream from circumventing the filter. Check the filter for tears after assembly is completed.

When glass liners are used, install the selected nozzle using a Viton A O-ring when stack temperatures are less than 260 °C (500 °F) and an asbestos string gasket when temperatures are higher. See APTD–0576 for details. Other connecting systems using either 316 stainless steel or Teflon ferrules may be used. When metal liners are used, install the nozzle as above or by a leak-free direct mechanical connection. Mark the probe with heat resistant tape or by some other method to denote the proper distance into the stack or duct for each sampling point.

Set up the train as in Figure 5–1, using (if necessary) a very light coat of silicone grease on all ground glass joints, greasing only the outer portion (see APTD–0576) to avoid possibility of contamination by the silicone grease. Subject to the approval of the Administrator, a glass cyclone may be used between the probe and filter holder when the total particulate catch is expected to exceed 100 mg or when water droplets are present in the stack gas.

Place crushed ice around the impingers.

4.1.4 Leak-Check Procedures.

4.1.4.1 Pretest Leak-Check. A pretest leak-check is recommended, but not required. If the tester opts to conduct the pretest leak-check, the following procedure shall be used.

After the sampling train has been assembled, turn on and set the filter and probe heating systems at the desired operating temperatures. Allow time for the temperatures to stabilize. If a Viton A O-ring or other leak-free connection is used in assembling the probe nozzle to the probe liner, leak-check the train at the sampling site by plugging the nozzle and pulling a 380 mm Hg (15 in. Hg) vacuum.

NOTE: A lower vacuum may be used, provided that it is not exceeded during the test.

If an asbestos string is used, do not connect the probe to the train during the leak-check. Instead, leak-check the train by first plugging the inlet to the filter holder (cyclone, if applicable) and pulling a 380 mm Hg (15 in. Hg) vacuum (see Note immediately above). Then connect the probe to the train and leak-check at about 25 mm Hg (1 in. Hg) vacuum; alternatively, the probe may be leak-checked with the rest of the sampling train, in one step, at 380 mm Hg (15 in. Hg) vacuum. Leakage rates in excess of 4 percent of the average sampling rate or 0.00057 m^3/min (0.02 cfm), whichever is less, are unacceptable.

The following leak-check instructions for the sampling train described in APTD–0576 and APTD–0581 may be helpful. Start the pump with bypass valve fully open and coarse adjust valve, completely closed. Partially open the coarse adjust valve and slowly close the bypass valve until the desired vacuum is reached. Do not reverse direction of bypass valve; this will cause water to back up into the filter holder. If the desired vacuum is exceeded, either leak-check at this higher vacuum or end the leak-check as shown below and start over.

When the leak-check is completed, first slowly remove the plug from the inlet to the probe, filter holder, or cyclone (if applicable) and immediately turn off the vacuum pump. This prevents the water in the impingers from being forced backward into the filter holder and silica gel from being entrained backward into the third impinger.

4.1.4.2 Leak-Checks During Sample Run. If, during the sampling run, a component (e.g., filter assembly or impinger) change becomes necessary, a leak-check shall be conducted immediately before the change is made. The leak-check shall be done according to the procedure outlined in Section 4.1.4.1 above, except that it shall be done at a vacuum equal to or greater than the maximum value recorded up to that point in the test. If the leakage rate is found to be no greater than 0.00057 m^3/min (0.02 cfm) or 4 percent of the average sampling rate (whichever is less), the results are acceptable, and

no correction will need to be applied to the total volume of dry gas metered; if, however, a higher leakage rate is obtained, the tester shall either record the leakage rate and plan to correct the sample volume as shown in Section 6.3 of this method, or shall void the sampling run.

Immediately after component changes, leak-checks are optional; if such leak-checks are done, the procedure outlined in Section 4.1.4.1 above shall be used.

4.1.4.3 Post-test Leak-Check. A leak-check is mandatory at the conclusion of each sampling run. The leak-check shall be done in accordance with the procedures outlined in Section 4.1.4.1, except that it shall be conducted at a vacuum equal to or greater than the maximum value reached during the sampling run. If the leakage rate is found to be no greater than 0.00057 m^3/min (0.02 cfm) or 4 percent of the average sampling rate (whichever is less), the results are acceptable, and no correction need be applied to the total volume of dry gas metered. If, however, a higher leakage rate is obtained, the tester shall either record the leakage rate and correct the sample volume as shown in Section 6.3 of this method, or shall void the sampling run.

4.1.5 Particulate Train Operation. During the sampling run, maintain an isokinetic sampling rate (within 10 percent of true isokinetic unless otherwise specified by the Administrator) and a temperature around the filter of 120±14 °C (248±25 °F), or such other temperature as specified by an applicable subpart of the standards or approved by the Administrator.

For each run, record the data required on a data sheet such as the one shown in Figure 5–2. Be sure to record the initial dry gas meter reading. Record the dry gas meter readings at the beginning and end of each sampling time increment, when changes in flow rates are made, before and after each leak-check, and when sampling is halted. Take other readings required by Figure 5–2 at least once at each sample point during each time increment and additional readings when significant changes (20 percent variation in velocity head readings) necessitate additional adjustments in flow rate. Level and zero the manometer. Because the manometer level and zero may drift due to vibrations and temperature changes, make periodic checks during the traverse.

Clean the portholes prior to the test run to minimize the chance of sampling deposited material. To begin sampling, remove the nozzle cap, verify that the filter and probe heating systems are up to temperature, and that the pitot tube and probe are properly positioned. Position the nozzle at the first traverse point with the tip pointing directly into the gas stream. Immediately start the pump and adjust the flow to isokinetic conditions. Nomographs are available, which aid in the rapid adjustment of the isokinetic sampling rate without excessive computations. These nomographs are designed for use when the Type S pitot tube coefficient is 0.85±0.02, and the stack gas equivalent density (dry molecular weight) is equal to 29±4. APTD–0576 details the procedure for using the nomographs. If C_p and M_d are outside the above stated ranges do not use the nomographs unless appropriate steps (see Citation 7 in Bibliography) are taken to compensate for the deviations.

FIGURE 5–2—PARTICULATE FIELD DATA

Plant .....
Location .....
Operator .....
Date .....
Run No .....
Sample box No .....
Meter box No .....
Meter Δ H@ .....
C factor .....
Pitot tube coefficient, Cp .....

Ambient temperature .....
Barometric pressure .....
Assumed moisture, % .....
Probe length, m. (ft.) .....
Nozzle identification No. .....
Average calibrated nozzle diameter, cm (in.) .....
Probe heater setting .....
Leak rate, m^3/min, (cfm) .....
Probe liner material .....
Static pressure, mm. Hg (in. Hg) .....
Filter No. .....

SCHEMATIC OF STACK CROSS SECTION

Traverse point number	Sampling time	Vacuum	Stack temperature	Velocity head	Pressure differential across orifice meter	Gas sample volume	Gas sample temperature at dry gas meter		Filter holder temperature	Temperature of gas leaving condenser or last impinger
							Inlet	Outlet		
	(e). min.	mm Hg (in. Hg)	(T_S). °C (°F)	(Δ P_S). mm (in.) H_2O	mm H_2O (in. H_2O)	m^3 (ft^3)	°C (°F)	°C (°F)	°C (°F)	°C (°F)
Total										
Average										

When the stack is under significant negative pressure (height of impinger stem), take care to close the coarse adjust valve before inserting the probe into the stack to prevent water from backing into the filter holder. If necessary, the pump may be turned on with the coarse adjust valve closed.

When the probe is in position, block off the openings around the probe and porthole to prevent unrepresentative dilution of the gas stream.

Traverse the stack cross-section, as required by Method 1 or as specified by the Administrator, being careful not to bump the probe nozzle into the stack walls when sampling near the walls or when removing or inserting the probe through the portholes; this minimizes the chance of extracting deposited material.

During the test run, make periodic adjustments to keep the temperature around the filter holder at the proper level; add more ice and, if necessary, salt to maintain a temperature of less than 20 °C (68 °F) at the condenser/silica gel outlet. Also, periodically check the level and zero of the manometer.

If the pressure drop across the filter becomes too high, making isokinetic sampling difficult to maintain, the filter may be replaced in the midst of a sample run. It is recommended that another complete filter assembly be used rather than attempting to change the filter itself. Before a new filter assembly is installed, conduct a leak-check (see Section 4.1.4.2). The total particulate weight shall include the summation of all filter assembly catches.

A single train shall be used for the entire sample run, except in cases where simultaneous sampling is required in two or more separate ducts or at two or more different locations within the same duct, or, in cases where equipment failure necessitates a change of trains. In all other situations, the use of two or more trains will be subject to the approval of the Administrator.

Note that when two or more trains are used, separate analyses of the front-half and (if applicable) impinger catches from each train shall be performed, unless identical nozzle sizes were used on all trains, in which case, the front-half catches from the individual trains may be combined (as may the impinger catches) and one analysis of front-half catch and one analysis of impinger catch may be performed. Consult with the Administrator for details concerning the calculation of results when two or more trains are used.

At the end of the sample run, turn off the coarse adjust valve, remove the probe and nozzle from the stack, turn off the pump, record the final dry gas meter reading, and conduct a post-test leak-check, as outlined in Section 4.1.4.3. Also, leak-check the pitot lines as described in Method 2, Section 3.1; the lines must pass this leak-check, in order to validate the velocity head data.

4.1.6 Calculation of Percent Isokinetic. Calculate percent isokinetic (see Calculations, Section 6) to determine whether the run was valid or another test run should be made. If there was difficulty in maintaining isokinetic rates due to source conditions, consult with the Administrator for possible variance on the isokinetic rates.

4.2 Sample Recovery. Proper cleanup procedure begins as soon as the probe is removed from the stack at the end of the sampling period. Allow the probe to cool.

When the probe can be safely handled, wipe off all external particulate matter near the tip of the probe nozzle and place a cap over it to prevent losing or gaining particulate matter. Do not cap off the probe tip tightly while the sampling train is cooling down as this would create a vacuum in the filter holder, thus drawing water from the impingers into the filter holder.

Before moving the sample train to the cleanup site, remove the probe from the sample train, wipe off the silicone grease, and cap the open outlet of the probe. Be careful not to lose any condensate that might be present. Wipe off the silicone grease from the filter inlet where the probe was fastened and cap it. Remove the umbilical cord from the last impinger and cap the impinger. If a flexible line is used between the first impinger or condenser and the filter holder, disconnect the line at the filter holder and let any condensed water or liquid drain into the impingers or condenser. After wiping off the silicone grease, cap off the filter holder outlet and impinger inlet. Either ground-glass stoppers, plastic caps, or serum caps may be used to close these openings.

Transfer the probe and filter-impinger assembly to the cleanup area. This area should be clean and protected from the wind so that the chances of contaminating or losing the sample will be minimized.

Save a portion of the acetone used for cleanup as a blank. Take 200 ml of this acetone directly from the wash bottle being used and place it in a glass sample container labeled ''acetone blank.''

Inspect the train prior to and during disassembly and note any abnormal conditions. Treat the samples as follows:

Container No. 1. Carefully remove the filter from the filter holder and place it in its identified petri dish container. Use a pair of tweezers and/or clean disposable surgical gloves to handle the filter. If it is necessary to fold the filter, do so such that the particulate cake is inside the fold. Carefully transfer to the petri dish any particulate matter and/or filter fibers which adhere to the filter holder gasket, by using a dry Nylon bristle brush and/or a sharp-edged blade. Seal the container.

Container No. 2. Taking care to see that dust on the outside of the probe or other exterior surfaces does not get into the sample, quantitatively recover particulate matter or any condensate from the probe nozzle, probe fitting, probe liner, and front half of the filter holder by washing these components with acetone and placing the wash in a glass container. Distilled water may be used instead of acetone when approved by the Administrator and shall be used when specified by the Administrator; in these cases, save a water blank and follow the Administrator's directions on analysis. Perform the acetone rinses as follows:

Carefully remove the probe nozzle and clean the inside surface by rinsing with acetone from a wash bottle and brushing with a Nylon bristle brush. Brush until the acetone rinse shows no visible particles, after which make a final rinse of the inside surface with acetone.

Brush and rinse the inside parts of the Swagelok fitting with acetone in a similar way until no visible particles remain.

Rinse the probe liner with acetone by tilting and rotating the probe while squirting acetone into its upper end so that all inside surfaces will be wetted with acetone. Let the acetone drain from the lower end into the sample container. A funnel (glass or polyethylene) may be used to aid on transferring liquid washes to the container. Follow the acetone rinse with a probe brush. Hold the probe in an inclined position, squirt acetone into the upper end as the probe brush is being pushed with a twisting action through the probe; hold a sample container underneath the lower end of the probe, and catch any acetone and particulate matter which is brushed from the probe. Run the brush through the probe three times or more until no visible particulate matter is carried out with the acetone or until none remains in the probe liner on visual inspection. With stainless steel or other metal probes, run the brush through in the above prescribed manner at least six times since metal probes have small crevices in which particulate matter can be entrapped. Rinse the brush with acetone, and quantitatively collect these washings in the sample container. After the brushing, make a final acetone rinse of the probe as described above.

It is recommended that two people clean the probe to minimize sample losses. Between sampling runs, keep brushes clean and protected from contaminations.

After ensuring that all joints have been wiped clean of silicone grease, clean the inside of the front half of the filter holder by rubbing the surfaces with a Nylon bristle brush and rinsing with acetone. Rinse each surface three times or more if needed to remove visible particulate. Make a final rinse of the brush and filter holder. Carefully rinse out the glass cyclone, also (if applicable). After all acetone washings and particulate matter have been collected in the sample container, tighten the lid on the sample container so that acetone will not leak out when it is shipped to the laboratory. Mark the height of the fluid level to determine whether or not leakage occured during transport. Label the container to clearly identify its contents.

Container No. 3. Note the color of the indicating silica gel to determine if it has been completely spent and make a notation of its condition. Transfer the silica gel from the fourth impinger to its original container and seal. A funnel may make it easier to pour the silica gel without spilling. A rubber policeman may be used as an aid in removing the silica gel from the impinger. It is not necessary to remove the small amount of dust particles that may adhere to the impinger wall and are difficult to remove. Since the gain in weight is to be used for moisture calculations, do not use any water or other liquids to transfer the silica gel. If a balance is available in the field, follow the procedure for container No. 3 in Section 4.3.

Impinger Water. Treat the impingers as follows; Make a notation of any color or film in the liquid catch. Measure the liquid which is in the first three impingers to within ±1 ml by using a graduated cylinder or by weighing it to within ±0.5 g by using a balance (if one is available). Record the volume or weight of liquid present. This information is required to calculate the moisture content of the effluent gas.

Discard the liquid after measuring and recording the volume or weight, unless analysis of the impinger catch is required (see Note, Section 2.1.7).

If a different type of condenser is used, measure the amount of moisture condensed either volumetrically or gravimetrically.

Whenever possible, containers should be shipped in such a way that they remain upright at all times.

4.3 Analysis. Record the data required on a sheet such as the one shown in Figure 5–3. Handle each sample container as follows:

FIGURE 5–3—ANALYTICAL DATA

Plant
Date
Run No.
Filter No.
Amount liquid lost during transport
Acetone blank volume, ml
Acetone wash volume, ml
Acetone blank concentration, mg/mg (Equation 5–4)
Acetone wash blank, mg (Equation 5–5)

Container number	Weight of particulate collected, mg		
	Final weight	Tare weight	Weight gain
1.			

Container number	Weight of particulate collected, mg		
	Final weight	Tare weight	Weight gain
2.			
Total.			
Less acetone blank.			
Weight of particulate matter.			

	Volume of liquid water collected	
	Impinger volume, ml	Silica gel weight, g
Final.		
Initial.		
Liquid collected.		
Total volume collected		g* ml

*Convert weight of water to volume by dividing total weight increase by density of water (1 g/ml).

$$\frac{\text{Increase, g}}{(1\ \text{g/ml})} = \text{Volume water, ml}$$

Container No. 1. Leave the contents in the shipping container or transfer the filter and any loose particulate from the sample container to a tared glass weighing dish. Desiccate for 24 hours in a desiccator containing anhydrous calcium sulfate. Weigh to a constant weight and report the results to the nearest 0.1 mg. For purposes of this Section, 4.3, the term ''constant weight'' means a difference of no more than 0.5 mg or 1 percent of total weight less tare weight, whichever is greater, between two consecutive weighings, with no less than 6 hours of desiccation time between weighings.

Alternatively, the sample may be oven dried at 105 °C (220 °F) for 2 to 3 hours, cooled in the desiccator, and weighed to a constant weight, unless otherwise specified by the Administrator. The tester may also opt to oven dry the sample at 105 °C (220 °F) for 2 to 3 hours, weigh the sample, and use this weight as a final weight.

Container No. 2. Note the level of liquid in the container and confirm on the analysis sheet whether or not leakage occurred during transport. If a noticeable amount of leakage has occurred, either void the sample or use methods, subject to the approval of the Administrator, to correct the final results. Measure the liquid in this container either volumetrically to ±1 ml or gravimetrically to ±0.5 g. Transfer the contents to a tared 250-ml beaker and evaporate to dryness at ambient temperature and pressure. Desiccate for 24 hours and weigh to a constant weight. Report the results to the nearest 0.1 mg.

Container No. 3. Weigh the spent silica gel (or silica gel plus impinger) to the nearest 0.5 g using a balance. This step may be conducted in the field.

''Acetone Blank'' Container. Measure acetone in this container either volumetrically or gravimetrically. Transfer the acetone to a tared 250-ml beaker and evaporate to dryness at ambient temperature and pressure. Desiccate for 24 hours and weigh to a constant weight. Report the results to the nearest 0.1 mg.

NOTE: At the option of the tester, the contents of Container No. 2 as well as the acetone blank container may be evaporated at temperatures higher than ambient. If evaporation is done at an elevated temperature, the temperature must be below the boiling point of the solvent; also, to prevent ''bumping,'' the evaporation process must be closely supervised, and the contents of the beaker must be swirled occasionally to maintain an even temperature. Use extreme care, as acetone is highly flammable and has a low flash point.

4.4 Quality Control Procedures. The following quality control procedures are suggested to check the volume metering system calibration values at the field test site prior to sample collection. These procedures are optional for the tester.

4.4.1 Meter Orifice Check. Using the calibration data obtained during the calibration procedure described in Section 5.3, determine the Δ H@ for the metering system orifice. The Δ H@ is the orifice pressure differential in units of in. H_2O that correlates to 0.75 cfm of air at 528° R and 29.92 in. Hg. The Δ H@ is calculated as follows:

$$\Delta H_{@} = 0.0319\ \Delta H \frac{T_m}{P_{bar}} \frac{\theta^2}{Y^2 V^2_m} \quad \text{Eq. 5-9}$$

Where:

ΔH=Average pressure differential across the orifice meter, in. H_2O.

T_m=Absolute average dry gas meter temperature, ° R.

P_{bar}=Barometric pressure, in. Hg.

Θ=Total sampling time, min.

Y=Dry gas meter calibration factor, dimensionless.

V_m=Volume of gas sample as measured by dry gas meter, dcf.

0.0319=(0.0567 in. Hg/° R) x (0.75 cfm)².

Before beginning the field test (a set of three runs usually constitutes a field test), operate the metering system (i.e., pump, volume meter, and orifice) at the Δ H@ pressure differential for 10 minutes. Record the volume collected, the dry gas meter temperature, and the barometric pressure. Calculate a dry gas meter calibration check value, Y_c, as follows:

$$Y_c = \frac{10}{V_m}\left[\frac{0.0319\ T_m}{P_{bar}}\right]^{1/2}$$

Eq. 5–10

Where:

Y_c=Dry gas meter calibration check value, dimensionless.

10=10 minutes of run time.

Compare the Y_c value with the dry gas meter calibration factor Y to determine that:

$0.97Y < Y_c < 1.03Y$

If the Y_c value is not within this range, the volume metering system should be investigated before beginning the test.

4.4.2 Calibrated Critical Orifice. A calibrated critical orifice, calibrated against a wet test meter or spirometer and designed to be inserted at the inlet of the sampling meter box may be used as a quality control check by following the procedure of Section 7.2.

5. *Calibration*

Maintain a laboratory log of all calibrations.

5.1 Probe Nozzle. Probe nozzles shall be calibrated before their initial use in the field. Using a micrometer, measure the inside diameter of the nozzle to the nearest 0.025 mm (0.001 in.). Make three separate measurements using different diameters each time, and obtain the average of the measurements. The difference between the high and low numbers shall not exceed 0.1 mm (0.004 in.). When nozzles become nicked, dented, or corroded, they shall be reshaped, sharpened, and recalibrated before use. Each nozzle shall be permanently and uniquely identified.

5.2 Pitot Tube. The Type S pitot tube assembly shall be calibrated according to the procedure outlined in Section 4 of Method 2.

5.3 Metering System.

5.3.1 Calibration Prior to Use. Before its initial use in the field, the metering system shall be calibrated as follows: Connect the metering system inlet to the outlet of a wet test meter that is accurate to within 1 percent. Refer to Figure 5.5. The wet test meter should have a capacity of 30 liters/rev (1 ft^3/rev). A spirometer of 400 liters (14 ft^3) or more capacity, or equivalent, may be used for this calibration, although a wet test meter is usually more practical. The wet test meter should be periodically calibrated with a spirometer or a liquid displacement meter to ensure the accuracy of the wet test meter. Spirometers or wet test meters of other sizes may be used, provided that the specified accuracies of the procedure are maintained. Run the metering system pump for about 15 minutes with the orifice manometer indicating a median reading as expected in field use to allow the pump to warm up and to permit the interior surface of the wet test meter to be thoroughly wetted. Then, at each of a minimum of three orifice manometer settings, pass an exact quantity of gas through the wet test meter and note the gas volume indicated by the dry gas meter. Also note the barometric pressure, and the temperatures of the wet test meter, the inlet of the dry gas meter, and the outlet of the dry gas meter. Select the highest and lowest orifice settings to bracket the expected field operating range of the orifice. Use a minimum volume of 0.15 m^3 (5 cf) at all orifice settings. Record all the data on a form similar to Figure 5.6, and calculate Y, the dry gas meter calibration factor, and $\Delta H@$, the orifice calibration factor, at each orifice setting as shown on Figure 5.6. Allowable tolerances for individual Y and $\Delta H@$, values are given in Figure 5.6. Use the average of the Y values in the calculations in Section 6.

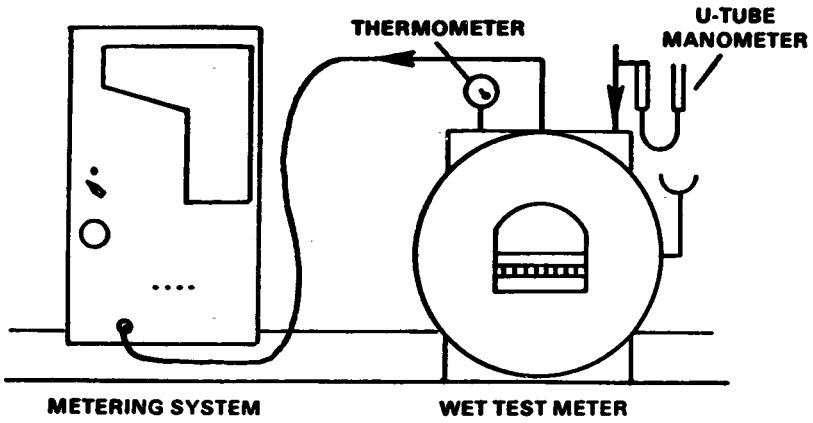

Figure 5.5 Equipment arrangement for metering system calibration.

Date_____ Metering System Identification:_____

Barometric pressure, P_b = _____ in. Hg

Orifice manometer setting ΔH in. H_2O	Spirometer (wet meter) gas volume V_w ft^3	Dry gas meter volume V_m ft^3	Temperatures				Time θ min
			Spirometer (wet meter) t_w °F	Dry Gas Meter			
				Inlet t_i °F	Outlet t_o °F	Average t_m °F	

Calculations

ΔH in. H_2O	Y $\frac{V_w P_b (t_m + 460)}{V_m \left[P_b + \frac{\Delta H}{13.6}\right] (t_w + 460)}$	$\Delta H@$ $\frac{0.0317\ \Delta H}{P_b (t_o + 460)} \left[\frac{(t_w + 460)\ \theta}{V_w}\right]^2$
Average		

Y = Ratio of reading of wet test meter to dry test meter; tolerance for individual values ±0.02 from average.

$\Delta H@$ = Orifice pressure differential that equates to 0.75 cfm of air @ 68°F and 29.92 inches of mercury, in. H_2O; tolerance for individual values ±0.20 from average.

Figure 5.6. Example data sheet for calibration of metering system (English units).

Before calibrating the metering system, it is suggested that a leak-check be conducted. For metering systems having diaphragm pumps, the normal leak-check procedure will not detect leakages within the pump. For these cases the following leak-check procedure is suggested: make a 10-minute calibration run at 0.00057m^3/min (0.02 cfm); at the end of the run, take the difference of the measured wet test meter and dry gas meter volumes; divide the difference by 10, to get the leak rate. The leak rate should not exceed 0.00057 m^3/min (0.02 cfm).

5.3.2 Calibration After Use. After each field use, the calibration of the metering system shall be checked by performing three calibration runs at a single, intermediate orifice setting (based on the previous field test), with the vacuum set at the maximum value reached during the test series. To adjust the vacuum, insert a valve between the wet test meter and the inlet of the metering system. Calculate the average value of the dry gas meter calibration factor. If the value has changed by more than 5 percent, recalibrate the meter over the full range of orifice settings, as previously detailed.

Alternative procedures, e.g., rechecking the orifice meter coefficient may be used, subject to the approval of the Administrator.

5.3.3 Acceptable Variation in Calibration. If the dry gas meter coefficient values obtained before and after a test series differ by more than 5 percent, the test series shall either be voided, or calculations for the test series shall be performed using whichever meter coefficient value (i.e., before or after) gives the lower value of total sample volume.

5.4 Probe Heater Calibration. The probe heating system shall be calibrated before its initial use in the field.

Use a heat source to generate air heated to selected temperatures that approximate those expected to occur in the sources to be sampled. Pass this air through the probe at a typical simple flow rate while measuring the probe inlet and outlet temperatures at various probe heater settings. For each air temperature generated, construct a graph of probe heating system setting versus probe outlet temperature. The procedure outlined in APTD–0576 can also be used. Probes constructed according to APTD–0581 need not be calibrated if the calibration curves in APTD–0576 are used. Also, probes with outlet temperature monitoring capabilities do not require calibration.

5.5 Temperature Gauges. Use the procedure in Section 4.3 of Method 2 to calibrate in-stack temperature gauges. Dial thermometers, such as are used for the dry gas meter and condenser outlet, shall be calibrated against mercury-in-glass thermometers.

5.6 Leak Check of Metering System Shown in Figure 5–1. That portion of the sampling train from the pump to the orifice meter should be leak checked prior to initial use and after each shipment. Leakage after the pump will result in less volume being recorded than is actually sampled. The following procedure is suggested (see Figure 5–4): Close the main valve on the meter box. Insert a one-hole rubber stopper with rubber tubing attached into the orifice exhaust pipe. Disconnect and vent the low side of the orifice manometer. Close off the low side orifice tap. Pressurize the system to 13 to 18 cm (5 to 7 in.) water column by blowing into the rubber tubing. Pinch off the tubing and observe the manometer for one minute. A loss of pressure on the manometer indicates a leak in the meter box; leaks, if present, must be corrected.

5.7 Barometer. Calibrate against a mercury barometer.

6. *Calculations*

Carry out calculations, retaining at least one extra decimal figure beyond that of the acquired data. Round off figures after the final calculation. Other forms of the equations may be used as long as they give equivalent results.

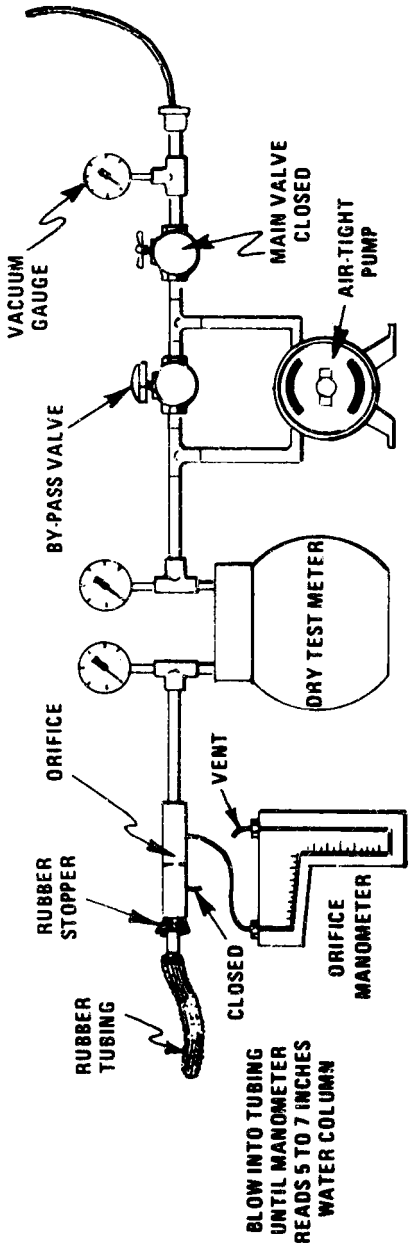

Figure 5–4. Leak check of meter box.

6.1 Nomenclature.

A_n=Cross-sectional area of nozzle, $m^2(ft^2)$.

B_{ws}=Water vapor in the gas stream, proportion by volume.

C_a=Acetone blank residue concentration, mg/mg.

c_s=Concentration of particulate matter in stack gas, dry basis, corrected to standard conditions, g/dscm (g/dscf).
I=Percent of isokinetic sampling.
L_a=Maximum acceptable leakage rate for either a pretest leak check or for a leak check following a component change; equal to 0.00057 m^3/min (0.02 cfm) or 4 percent of the average sampling rate, whichever is less.
L_i=Individual leakage rate observed during the leak check conducted prior to the "i^{th}" component change (i=1, 2, 3....n), m^3/min (cfm).
L_p=Leakage rate observed during the post-test leak check, m^3/min (cfm).
m_a=Mass of residue of acetone after evaporation, mg.
m_n=Total amount of particulate matter collected, mg.
M_w=Molecular weight of water, 18.0 g/g-mole (18.0lb/lb-mole).
P_{bar}=Barometric pressure at the sampling site, mm Hg (in. Hg).
P_s=Absolute stack gas pressure, mm Hg (in. Hg).
P_{std}=Standard absolute pressure, 760 mm Hg (29.92 in. Hg).
R=Ideal gas constant, 0.06236 mm Hg-m^3/°K-g-mole (21.85 in. Hg-ft^3/°R-lb-mole).
T_m=Absolute average dry gas meter temperature (see Figure 5–2), °K (°R).
T_s=Absolute average stack gas temperature (see Figure 5–2), °K (°R).
T_{std}=Standard absolute temperature, 293°K (528° R).
V_a=Volume of acetone blank, ml.
V_{aw}=Volume of acetone used in wash, ml.
V_{lc}=Total volume of liquid collected in impingers and silica gel (see Figure 5–3), ml.
V_m=Volume of gas sample as measured by dry gas meter, dcm (dscf).
$V_{m(std)}$=Volume of gas sample measured by the dry gas meter, corrected to standard conditions, dscm (dscf).
$V_{w(std)}$=Volume of water vapor in the gas sample, corrected to standard conditions, scm (scf).
v_s=Stack gas velocity, calculated by Method 2, Equation 2–9, using data obtained from Method 5, m/sec (ft/sec).
W_a=Weight of residue in acetone wash, mg.
Y=Dry gas meter calibration factor.
ΔH=Average pressure differential across the orifice meter (see Figure 5–2), mm H_2O (in. H_2O).
ϕ_a=Density of acetone, mg/ml (see label on bottle).
ϕ_w=Density of water, 0.9982 g/ml (0.002201 lb/ml).
θ=Total sampling time, min.
θ_1=Sampling time interval, from the beginning of a run until the first component change, min.
θ_i=Sampling time interval, between two successive component changes, beginning with the interval between the first and second changes, min.
θ_p=Sampling time interval, from the final (n^{th}) component change until the end of the sampling run, min.
13.6=Specific gravity of mercury.
60=Sec/min.
100=Conversion to percent.

6.2 Average Dry Gas Meter Temperature and Average Orifice Pressure Drop. See data sheet (Figure 5–2).

6.3 Dry Gas Volume. Correct the sample volume measured by the dry gas meter to standard conditions (20 °C, 760 mm Hg or 68 °F, 29.92 in. Hg) by using Equation 5–1.

$$V_{m(std)} = V_m Y \left(\frac{T_{std}}{T_m}\right)\left[\frac{P_{bar} + \frac{\Delta H}{13.6}}{P_{std}}\right] = K_1 V_m Y \frac{P_{bar} + (\Delta H/13.6)}{T_m}$$

Equation 5–1

Where;
K_1=0.3858 °K/mm Hg for metric units
=17.64 °R/in. Hg for English units

NOTE: Equation 5–1 can be used as written unless the leakage rate observed during any of the mandatory leak checks (i.e., the post-test leak check or leak checks conducted prior to component changes) exceeds L_a. If L_p or $_i$ exceeds L_a, Equation 5–1 must be modified as follows:

(a) Case I. No component changes made during sampling run. In this case, replace V_m in Equation 5–1 with the expression:

$[V_m—(L_p—L_a)\theta]$

(b) Case II. One or more component changes made during the sampling run. In this case, replace V_m in Equation 5–1 by the expression:

$$\left[V_m - (L_1 - L_a)\theta_1 - \sum_{i=2}^{n} (L_i - L_a)\theta_i - (L_p - L_a)\theta_p\right]$$

and substitute only for those leakage rates (L_i or L_p) which exceed L_a.

6.4 Volume of Water Vapor.

$$V_{w(std)} = \frac{V_{lc}\,\rho_w\,R\,T_{std}}{M_w\,P_{std}} = K_2\,V_{lc}$$

Eq. 5-2

Where:
K_2=0.001333 m^3/ml for metric units
=0.04707 ft^3/ml for English units.

6.5 Moisture Content.

$$B_{ws} = \frac{V_{w(std)}}{V_{m(std)} + V_{w(std)}} \quad \text{Eq. 5-3}$$

NOTE: In saturated or water droplet-laden gas streams, two calculations of the moisture content of the stack gas shall be made, one from the impinger analysis (Equation 5–3), and a second from the assumption of saturated conditions. The lower of the two values of B_{ws} shall be considered correct. The procedure for determining the moisture content based upon assumption of saturated conditions is given in the Note of Section 1.2 of Method 4. For the purposes of this method, the average stack gas temperature from Figure 5–2 may be used to make this determination, provided that the accuracy of the in-stack temperature sensor is ±1 °C (2 °F).

6.6 Acetone Blank Concentration.

$$C_a = \frac{m_a}{V_a \rho_a} \quad \text{Eq. 5-4}$$

6.7 Acetone Wash Blank.

$$W_a = C_a V_{aw} \rho_a \quad \text{Eq. 5-5}$$

6.8 Total Particulate Weight. Determine the total particulate catch from the sum of the weights obtained from Containers 1 and 2 less the acetone blank (see Figure 5–3).

NOTE: Refer to Section 4.1.5 to assist in calculation of results involving two or more filter assemblies or two or more sampling trains.

6.9 Particulate Concentration.

$c_s = (0.001\ g/mg)\ (m_n/V_{m(std)})$ Eq. 5–6

6.10 Conversion Factors:

From	To	Multiply by
scf	m^3	0.02832.
g	*mg*	0.001
g/ft^3	gr/ft^3	15.43.
g/ft^3	lb/ft^3	2.205×10^{-3}.
g/ft^3	g/m^3	35.31.

6.11 Isokinetic Variation.

6.11.1 Calculation From Raw Data.

$$I = \frac{100 T_s \left[K_3 V_{1c} + \left(V_m Y / T_m\right)\left(P_{bar} + \Delta H/13.6\right)\right]}{60 \theta V_s P_s A_n} \quad \text{Eq. 5-7}$$

Where:

K_3=0.003454 mm Hg−m^3/ml−°K for metric units.

=0.002669-in. Hg−ft^3/ml−°R for English units.

6.11.2 Calculation From Intermediate Values.

$$I = \frac{100\ T_s\ V_{m(std)}\ P_{std}}{60\ T_{std}\ v_s\ \theta\ A_n\ P_s\ (1 - B_{ws})} = \frac{K_4\ T_s\ V_{m(std)}}{P_s\ v_s\ A_n\ \theta\ (1 - B_{ws})} \quad \text{Eq. 5-8}$$

Where:

K_4=4.320 for metric units

=0.09450 for English units.

6.12 Acceptable Results. If 90 percent ≤ I ≤ 110 percent, the results are acceptable. If the particulate results are low in comparison to the standard, and I is over 110 percent or less than 90 percent, the Administrator may accept the results. Citation 4 in the bibliography section can be used to make acceptability judgments. If I is judged to be unacceptable, reject the particulate results and repeat the test.

6.13 Stack Gas Velocity and Volumetric Flow Rate. Calculate the average stack gas velocity and volumetric flow rate, if needed, using data obtained in this method and the equations in Sections 5.2 and 5.3 of Method 2.

7. *Alternative Procedures*

7.1 Dry Gas Meter as a Calibration Standard. A dry gas meter may be used as a calibration standard for volume measurements in place of the wet test meter specified in Section 5.3, provided that it is calibrated initially and recalibrated periodically as follows:

7.1.1 Standard Dry Gas Meter Calibration.

7.1.1.1 The dry gas meter to be calibrated and used as a secondary reference meter should be of high quality and have an appropriately sized capacity, e.g., 3 liters/rev (0.1 ft^3/rev). A spirometer (400 liters or more capacity), or equivalent, may be used for this calibration, although a wet test meter is usually more practical. The wet test meter should have a capacity of 30 liters/rev (1 ft^3/rev) and capable of measuring volume to within ±1.0 percent; wet test meters should be checked against a spirometer or a liquid displacement meter to ensure the accuracy of the wet test meter. Spirometers or wet test meters of other sizes may be used, provided that the specified accuracies of the procedure are maintained.

7.1.1.2 Set up the components as shown in Figure 5.7. A spirometer, or equivalent, may

be used in place of the wet test meter in the system. Run the pump for at least 5 minutes at a flow rate of about 10 liters/min (0.35 cfm) to condition the interior surface of the wet test meter. The pressure drop indicated by the manometer at the inlet side of the dry gas meter should be minimized [no greater than 100 mm H_2O (4 in. H_2O) at a flow rate of 30 liters/min (1 cfm)]. This can be accomplished by using large diameter tubing connections and straight pipe fittings.

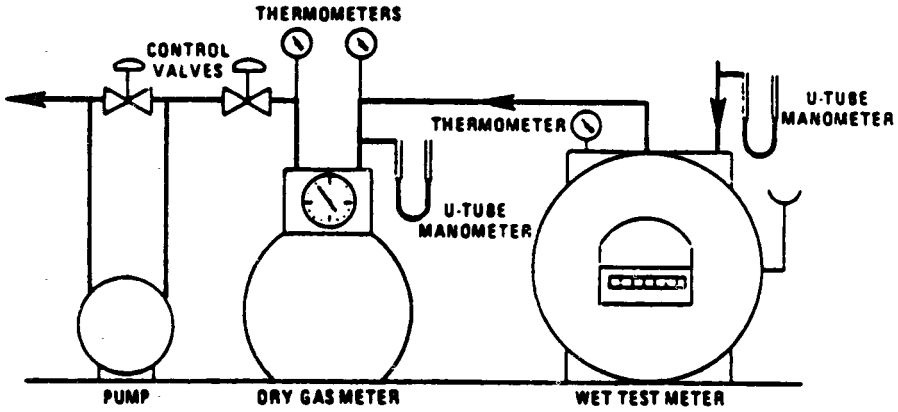

Figure 5.7 . Equipment arrangement for dry-gas meter calibration.

7.1.1.3 Collect the data as shown in the example data sheet (see Figure 5–8). Make triplicate runs at each of the flow rates and at no less than five different flow rates. The range of flow rates should be between 10 and 34 liters/min (0.35 and 1.2 cfm) or over the expected operating range.

DATE:_____

DRY GAS METER IDENTIFICATION:_____

BAROMETRIC PRESSURE (P_b):_____ in. Hg

APPROXIMATE FLOW RATE ($\bar{Q}$) cfm	SPIROMETER (WET METER) GAS VOLUME (V_s) ft³	DRY GAS METER VOLUME (V_{dg}) ft³	TEMPERATURES				DRY GAS METER PRESSURE (Δp) in. H_2O	TIME (θ) min.	FLOW RATE (Q) cfm	METER COEFFICIENT (Y_{ds})	AVERAGE METER COEFFICIENT ($\bar{Y}_{ds}$)
			SPIROMETER (WET METER) (t_s) °F	DRY GAS METER							
				INLET (t_i) °F	OUTLET (t_o) °F	AVERAGE ($\bar{t}_d$) °F					
0.40											
0.60											
0.80											
1.00											
1.20											

$$Q = 17.65 \cdot \frac{V_s}{\theta} \cdot \frac{P_b}{(t_s + 460)}$$

$$Y_{ds} = \frac{V_s}{V_{dg}} \cdot \frac{(\bar{t}_d + 460)}{(t_s + 460)} \cdot \frac{P_b}{\left(P_b + \frac{\Delta p}{13.6}\right)}$$

Figure 5.8. Example data sheet for calibration of a standard dry gas meter for method 5 sampling equipment (English units).

7.1.1.4 Calculate flow rate, Q, for each run using the wet test meter gas volume, V_w, and the run time, θ. Calculate the dry gas meter coefficient, Y_{ds}, for each run. These calculations are as follows:

$$Q = K_1 \frac{P_{bar}}{t_w + t_{std}} \frac{V_w}{\theta}$$

$$Y_{ds} = \frac{V_w\left(t_{ds} + t_{std}\right)}{V_{ds}\left(t_w + t_{std}\right)} \frac{P_{bar}}{\left(P_{bar} + \frac{\Delta p}{13.6}\right)}$$

Where:

K_1=0.3858 for international system of units (SI); 17.64 for English units.

V_w=Wet test meter volume, liters (ft^3).

V_{ds}=Dry gas meter volume, liters (ft^3).

t_{ds}=Average dry gas meter temperature, ° C (° F).

t_{std}=273° C for SI units; 460° F for English units.

t_w=Average wet test meter temperature, ° C (° F).

P_{bar}=Barometric pressure, mm Hg (in. Hg).

Δp=Dry gas meter inlet differential pressure, mm H_2O (in. H_2O).

θ=Run time, min.

7.1.1.5 Compare the three Y_{ds} values at each of the flow rates and determine the maximum and minimum values. The difference between the maximum and minimum values at each flow rate should be no greater than 0.030. Extra sets of triplicate runs may be made in order to complete this requirement. In addition, the meter coefficients should be between 0.95 and 1.05. If these specifications cannot be met in three sets of successive triplicate runs, the meter is not suitable as a calibration standard and should not be used as such. If these specifications are met, average the three Y_{ds} values at each flow rate resulting in five average meter coefficients, Y_{ds}.

7.1.1.6 Prepare a curve of meter coefficient, Y_{ds}, versus flow rate, Q, for the dry gas meter. This curve shall be used as a reference when the meter is used to calibrate other dry gas meters and to determine whether recalibration is required.

7.1.2 Standard Dry Gas Meter Recalibration.

7.1.2.1 Recalibrate the standard dry gas meter against a wet test meter or spirometer annually or after every 200 hours of operation, whichever comes first. This requirement is valid provided the standard dry gas meter is kept in a laboratory and, if transported, cared for as any other laboratory instrument. Abuse to the standard meter may cause a change in the calibration and will require more frequent recalibrations.

7.1.2.2 As an alternative to full recalibration, a two-point calibration check may be made. Follow the same procedure and equipment arrangement as for a full recalibration, but run the meter at only two flow rates [suggested rates are 14 and 28 liters/min (0.5 and 1.0 cfm)]. Calculate the meter coefficients for these two points, and compare the values with the meter calibration curve. If the two coefficients are within ±1.5 percent of the calibration curve values at the same flow rates, the meter need not be recalibrated until the next date for a recalibration check.

7.2 Critical Orifices As Calibration Standards. Critical orifices may be used as calibration standards in place of the wet test meter specified in Section 5.3, provided that they are selected, calibrated, and used as follows:

7.2.1 Section of Critical Orifices.

7.2.1.1 The procedure that follows describes the use of hypodermic needles or stainless steel needle tubings which have been found suitable for use as critical orifices. Other materials and critical orifice designs may be used provided the orifices act as true critical orifices; i.e., a critical vacuum can be obtained, as described in Section 7.2.2.2.3. Select five critical orifices that are appropriately sized to cover the range of flow rates between 10 and 34 liters/min or the expected operating range. Two of the critical orifices should bracket the expected operating range.

A minimum of three critical orifices will be needed to calibrate a Method 5 dry gas meter (DGM); the other two critical orifices can serve as spares and provide better selection for bracketing the range of operating flow rates. The needle sizes and tubing lengths shown below give the following approximate flow rates:

Gauge/cm	Flow rate (liters/min)	Gauge/cm	Flow rate (liters/min)
12/7.6	32.56	14/2.5	19.54
12/10.2	30.02	14/5.1	17.27
13/2.5	25.77	14/7.6	16.14
13/5.1	23.50	15/3.2	14.16
13/7.6	22.37	15/7.6	11.61
13/10.2	20.67	15/10.2	10.48

7.2.1.2 These needles can be adapted to a Method 5 type sampling train as follows: Insert a serum bottle stopper, 13- by 20-mm sleeve type, into a ½-inch Swagelok quick connect. Insert the needle into the stopper as shown in Figure 5–9.

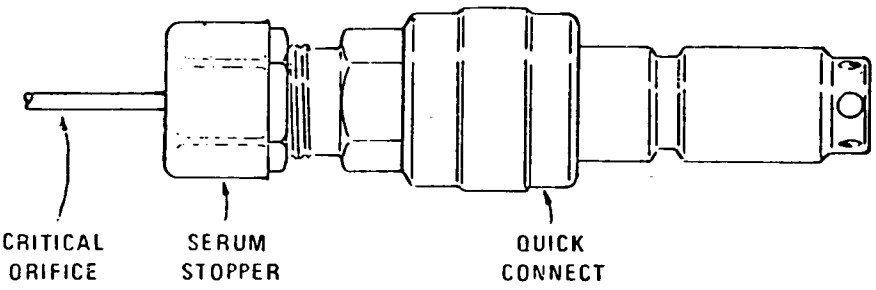

Figure 5-9. Critical orifice adaptation to Method 5 metering system.

7.2.2 Critical Orifice Calibration. The procedure described in this section uses the Method 5 meter box configuration with a DGM as described in Section 2.1.8 to calibrate the critical orifices. Other schemes may be used, subject to the approval of the Administrator.

7.2.2.1 Calibration of Meter Box. The critical orifices must be calibrated in the same configuration as they will be used; i.e., there should be no connections to the inlet of the orifice.

7.2.2.1.1 Before calibrating the meter box, leak check the system as follows: Fully open the coarse adjust valve, and completely close the by-pass valve. Plug the inlet. Then trun on the pump, and determine whether there is any leakage. The leakage rate shall be zero; i.e., no detectable movement of the DGM dial shall be seen for 1 minute.

7.2.2.1.2 Check also for leakages in that portion of the sampling train between the pump and the orifice meter. See Section 5.6 for the procedure; make any corrections, if necessary. If leakage is detected, check for cracked gaskets, loose fittings, worn O-rings, etc., and make the necessary repairs.

7.2.2.1.3 After determining that the meter box is leakless, calibrate the meter box according to the procedure given in Section 5.3. Make sure that the wet test meter meets the requirements stated in Section 7.1.1.1. Check the water level in the wet test meter. Record the DGM calibration factor, Y.

7.2.2.2 Calibration of Critical Orifices. Set up the apparatus as shown in Figure 5–10.

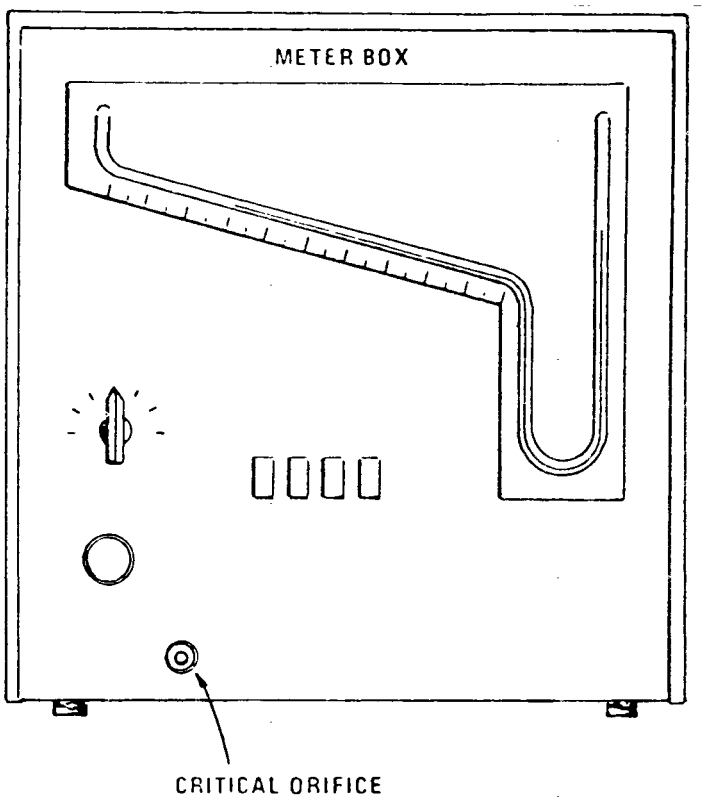

Figure 5-10. Apparatus setup.

7.2.2.2.1 Allow a warm-up time of 15 minutes. This step is important to equilibrate the temperature conditions through the DGM.

7.2.2.2.2 Leak check the system as in Section 7.2.2.1.1. The leakage rate shall be zero.

7.2.2.2.3 Before calibrating the critical orifice, determine its suitability and the appropriate operating vacuum as follows: Turn on the pump, fully open the coarse adjust valve, and adjust the by-pass valve to give a vacuum reading corresponding to about half of atmospheric pressure. Observe the meter box orifice manometer reading, H. Slowly increase the vacuum reading until a stable reading is obtained on the meter box orifice manometer. Record the critical vacuum for each orifice.

Orifices that do not reach a critical value shall not be used.

7.2.2.2.4 Obtain the barometric pressure using a barometer as described in Section 2.1.9. Record the barometric pressure, P_{bar}, in mm Hg (in. Hg).

7.2.2.2.5 Conduct duplicate runs at a vacuum of 25 to 50 mm Hg (1 to 2 in. Hg) above the critical vacuum. The runs shall be at least 5 minutes each. The DGM volume readings shall be in increments of 0.00283 m^3 (0.1 ft^3) or in increments of complete revolutions of the DGM. As a guideline, the times should not differ by more than 3.0 seconds (this includes allowance for changes in the DGM temperatures) to achieve ± 0.5 percent in K′. Record the information listed in Figure 5–11.

7.2.2.2.6 Calculate K′ using Equation 5–9.

$$K' = \frac{K_1 V_m Y (P_{bar} + \Delta H / 13.6)\sqrt{T_{amb}}}{P_{bar}\ T_m \theta} \quad \text{Eq. 5-9}$$

Where:

$$K' = \text{Critical orifice coefficient}, \frac{(m^3)(^oK)^{\frac{1}{2}}}{(\text{mm. Hg})(\text{min})}\left[\frac{(ft^3)(^oR)^{\frac{1}{2}}}{(\text{in. Hg})(\text{min})}\right]$$

T_{amb}=Absolute ambient temperature, °K (°R).

Average the K′ values. The individual K′ values should not differ by more than ±0.5 percent from the average.

7.2.3 Using the Critical Orifices as Calibration Standards.

7.2.3.1 Record the barometric pressure.

Date Train ID DGM cal. factor Critical orifice ID

Dry gas meter		Run number	
		1	2
Final reading	m^3 (ft^3)		
Initial reading	m^3 (ft^3)		
Difference, V_m	m^3 (ft^3)		
Inlet/Outlet temperatures:			
Initial	°C (°F)	/	/
Final	°C (°F)	/	/
Avg. Temperature, t_m.	°C (°F)		
Time, Θ	min/sec	/	/
	min		
Orifice man. rdg., Δ H	mm (in.) H_2O		
Bar. pressure, P_{bar}	mm (in.) Hg		
Ambient temperature, t_{amb}.	°C (°F)		
Pump vacuum	mm (in.) Hg		
K′ factor			
Average			

Figure 5–11. Data sheet for determining K′ factor.

7.2.3.2 Calibrate the metering system according to the procedure outlined in Sections 7.2.2.2.1 to 7.2.2.2.5. Record the information listed in Figure 5.12.

7.2.3.3 Calculate the standard volumes of air passed through the DGM and the critical orifices, and calculate the DGM calibration factor, Y, using the equations below:

$$V_m(\text{std}) = K_1 V_m \frac{P_{bar} + (\Delta H / 13.6)}{T_m} \quad \text{Eq. 5-10}$$

$$V_{cr}(\text{std}) = K' \frac{P_{bar}\theta}{T_{amb}} \quad \text{Eq. 5-11}$$

$$Y = \frac{V_{cr(\text{std})}}{V_{m(\text{std})}} \quad \text{Eq. 5-12}$$

where:

$V_{cr(std)}$=Volume of gas sample passed through the critical orifice, corrected to standard conditions, dsm^3 (dscf).

K_1=0.3858 °K/mm Hg for metric units

=17.64 °R/in. Hg for English units.

7.2.3.4 Average the DGM calibration values for each of the flow rates. The calibration factor, Y, at each of the flow rates should not differ by more than ±2 percent from the average.

7.2.3.5 To determine the need for recalibrating the critical orifices, compare the DGM Y factors obtained from two adjacent orifices each time a DGM is calibrated; for example, when checking 13/2.5, use orifices 12/10.2 and 13/5.1. If any critical orifice yields a DGM Y factor differing by more than 2 percent from the others, recalibrate the critical orifice according to Section 7.2.2.2.

Date Train ID Critical orifice ID Critical orifice K′ factor

Dry gas meter		Run number	
		1	2
Final reading	m^3 (ft^3)		
Initial reading	m^3 (ft^3)		
Difference, V_m	m^3 (ft^3)		
Inlet/outlet temperatures:			
Initial	°C (°F)	/	/
Final	°C (°F)	/	/
Avg. Temperature, t_m	°C (°F)		
Time, Θ	min/sec	/	/
	min		
Orifice man. rdg., Δ H	mm (in.) H_2O.		
Bar. pressure, P_{bar}	mm (in.) Hg		
Ambient temperature, t_{amb}	°C (°F)		
Pump vacuum	mm (in.) Hg		
$V_{m(std)}$	m^3 (ft^3)		
$V_{cr(std)}$	m^3 (ft^3)		
DGM cal. factor, Y			

Figure 5–12. Data sheet for determining DGM Y factor.

8. *Bibliography*

1. Addendum to Specifications for Incinerator Testing at Federal Facilities. PHS, NCAPC. Dec. 6, 1967.

2. Martin, Robert M. Construction Details of Isokinetic Source-Sampling Equipment. Environmental Protection Agency. Research Triangle Park, NC. APTD–0581. April 1971.

3. Rom, Jerome J. Maintenance, Calibration, and Operation of Isokinetic Source Sampling Equipment. Environmental Protection Agency. Research Triangle Park, NC. APTD–0576. March, 1972.

4. Smith, W. S., R. T. Shigehara, and W. F. Todd. A Method of Interpreting Stack Sampling Data. Paper Presented at the 63d Annual Meeting of the Air Pollution Control Association, St. Louis, MO, June 14–19, 1970.

5. Smith, W. S., et al. Stack Gas Sampling Improved and Simplified With New Equipment. APCA Paper No. 67–119. 1967.

6. Specifications for Incinerator Testing at Federal Facilities. PHS, NCAPC. 1967.

7. Shigehara, R. T. Adjustments in the EPA Nomograph for Different Pitot Tube Coefficients and Dry Molecular Weights. Stack Sampling News *2*:4–11, October, 1974.

8. Vollaro, R. F. A Survey of Commercially Available Instrumentation For the Measurement of Low-Range Gas Velocities. U.S. Environmental Protection Agency, Emission Measurement Branch. Research Triangle Park, NC. November, 1976 (unpublished paper).

9. Annual Book of ASTM Standards. Part 26. Gaseous Fuels; Coal and Coke; Atmospheric Analysis. American Society for Testing and Materials. Philadelphia, PA. 1974. pp. 617–622.

10. Felix, L. G., G. I. Clinard, G. E. Lacey, and J. D. McCain. Inertial Cascade Impactor Substrate Media for Flue Gas Sampling. U.S. Environmental Protection Agency. Research Triangle Park, NC 27711, Publication No. EPA–600/7–77–060. June 1977. 83 p.

11. Westlin, P. R. and R. T. Shigehara. Procedure for Calibrating and Using Dry Gas Volume Meters as Calibration Standards. Source Evaluation Society Newsletter. *3*(1):17–30. February 1978.

12. Lodge, J.P., Jr., J.B. Pate, B.E. Ammons, and G.A. Swanson. The Use of Hypodermic Needles as Critical Orifices in Air Sampling. J. Air Pollution Control Association. *16:*197–200. 1966.

METHOD 5A—DETERMINATION OF PARTICULATE EMISSIONS FROM THE ASPHALT PROCESSING AND ASPHALT ROOFING INDUSTRY

1. *Applicability and Principle*

1.1 Applicability. This method applies to the determination of particulate emissions from asphalt roofing industry process saturators, blowing stills, and other sources as specified in the regulations.

1.2 Principle. Particulate matter is withdrawn isokinetically from the source and collected on a glass filter fiber maintained at a temperature of 42°±10 °C (108°±18 °F). The particulate mass, which includes any material that condenses at or above the filtration temperature, is determined gravimetrically after removal of uncombined water.

2. *Apparatus*

2.1 Sampling Train. The sampling train configuration is the same as shown in Figure 5–1 of Method 5. The sampling train consists of the following components:

2.1.1 Probe Nozzle, Pitot Tube, Differential Pressure Gauge, Filter Holder, Condenser, Metering System, Barometer, and Gas Density Determination Equipment. Same as Method 5, Sections 2.1.1, 2.1.3 to 2.1.5, and 2.1.7 to 2.1.10, respectively.

2.1.2 Probe Liner. Same as in Method 5, Section 2.1.2, with the note that at high stack gas temperatures (greater than 250 °C (480 °F)), water-cooled probes may be required to control the probe exit temperature to 42°±10 °C (108±18 °F).

2.1.3 Precollector Cyclone. Borosilicate glass following the construction details shown in Air Pollution Technical Document–0581, ''Construction Details of Isokinetic Source-Sampling Equipment''.

NOTE: The tester shall use the cyclone when the stack gas moisture is greater than 10 percent. The tester shall not use the precollector cyclone under other, less severe conditions.

2.1.4 Filter Heating System. Any heating (or cooling) system capable of maintaining a sample gas temperature at the exit end of the filter holder during sampling at 42°±10° C (108°±18° F). Install a temperature gauge capable of measuring temperature within 3° C (5.4° F) at the exit side of the filter holder so that the sensing tip of the temperature

gauge is in direct contact with the sample gas, and the sample gas temperature can be regulated and monitored during sampling. The temperature gauge shall comply with the calibration specifications defined in Section 5. The tester may use systems other than the one shown in APTD–0581.

2.2 Sample Recovery. The equipment required for sample recovery is as follows:

2.2.1 Probe-Liner and Probe-Nozzle Brushes, Graduated Cylinder and/or Balance, Plastic Storage Containers, and Funnel and Rubber Policeman. Same as Method 5, Sections 2.2.1, 2.2.5, 2.2.6, and 2.2.7, respectively.

2.2.2 Wash Bottles. Glass.

2.2.3 Sample Storage Containers. Chemically resistant, borosilicate glass bottles, with rubber-backed Teflon screw cap liners or caps that are constructed so as to be leak-free and resistant to chemical attack by 1,1,1-trichloroethane (TCE), 500-ml or 1000-ml. (Narrow mouth glass bottles have been found to be less prone to leakage.)

2.2.4 Petri Dishes. Glass, unless otherwise specified by the Administrator.

2.2.5 Funnel. Glass.

2.3 Analysis. For analysis, the following equipment is needed:

2.3.1 Glass Weighing Dishes, Desiccator, Analytical Balance, Balance, Hygrometer, and Temperature Gauge. Same as Method 5, Sections 2.3.1 to 2.3.4, 2.3.6, and 2.3.7, respectively.

2.3.2 Beakers. Glass, 250-ml and 500-ml.

2.3.3 Separatory Funnel. 100-ml or greater.

3. *Reagents*

3.1 Sampling. The reagents used in sampling are as follows:

3.1.1. Filters, Silica Gel, and Crushed Ice. Same as Method 5, Sections 3.1.1, 3.1.2, and 3.1.4, respectively.

3.1.2 Stopcock Grease. TCE-insoluble, heat-stable grease (if needed). This is not necessary if screw-on connectors with Teflon sleeves, or similar, are used.

3.2 Sample Recovery. Reagent grade 1,1,1-trichloroethane (TCE), ≦0.001 percent residue and stored in glass bottles, is required. Run TCE blanks prior to field use and use only TCE with low blank values (≦0.001 percent). The tester shall in no case subtract a blank value of greater than 0.001 percent of the weight of TCE used from the sample weight.

3.3 Analysis. Two reagents are required for the analysis:

3.3.1 TCE. Same as 3.2.

3.3.2 Desiccant. Same as Method 5, Section 3.3.2.

4. *Procedure*

4.1 Sampling Train Operation. The complexity of this method is such that in order to obtain reliable results, testers should be trained and experienced with Method 5 test procedures.

4.1.1 Pretest Preparation. Unless otherwise specified, maintain and calibrate all components according to the procedure described in Air Pollution Technical Document-0576, ''Maintenance, Calibration, and Operation of Isokinetic Source-Sampling Equipment''.

Prepare probe liners and sampling nozzles as needed for use. Thoroughly clean each component with soap and water followed by a minimum of three TCE rinses. Use the probe and nozzle brushes during at least one of the TCE rinses (refer to Section 4.2 for rinsing techniques). Cap or seal the open ends of the probe liners and nozzles to prevent contamination during shipping.

Prepare silica gel portions and glass filters as specified in Method 5, Section 4.1.1.

4.1.2 Preliminary Determinations. Select the sampling site, probe nozzle, and probe length as specified in Method 5, Section 4.1.2.

Select a total sampling time greater than or equal to the minimum total sampling time specified in the test procedures section of the applicable regulation. Follow the guidelines outlined in Method 5, Section 4.1.2, for sampling time per point and total sample volume collected.

4.1.3 Preparation of Collection Train. Prepare the collection train as specified in Method 5, Section 4.1.3, with the addition of the following:

Set up the sampling train as shown in Figure 5–1 of Method 5 with the addition of the precollector cyclone, if used, between the probe and filter holder. The temperature of the precollector cyclone, if used, should be about the same as for the filter, i.e., 42°±10 °C (108°±18 °F). Use no stopcock grease on ground glass joints unless the grease is insoluble in TCE.

4.1.4 Leak Check Procedures. Follow the procedures given in Method 5, Sections 4.1.4.1 (Pretest Leak Check), 4.1.4.2 (Leak Check During Sample Run), and 4.1.4.3 (Post-Test Leak Check).

4.1.5 Particulate Train Operation. Operate the sampling train as described in Method 5, Section 4.1.5, except maintain the gas temperature exiting the filter at 42°±10 °C (108°±18 °F).

4.1.6 Calculation of Percent Isokinetic. Same as in Method 5, Section 4.1.6.

4.2 Sample Recovery. Using the procedures and techniques described in Method 5, Section 4.2, quantitatively recover any particulate matter into the following containers (additions and deviations to the stated procedures are as noted):

4.2.1 Container No. 1 (Filter). Same instructions as Method 5, Section 4.2, ''Container No. 1.'' If it is necessary to fold the filter, do so such that the film of oil is inside the fold.

4.2.2 Container No. 2 (Probe to Filter Holder). Taking care to see that material on the outside of the probe or other exterior

surfaces does not get into the sample, quantitatively recover particulate matter or any condensate from the probe nozzle, probe fitting, probe liner, precollector cyclone and collector flask (if used), and front half of the filter holder by washing these components with TCE and placing the wash in a glass container. Carefully measure the total amount of TCE used in the rinses. Perform the TCE rinses as described in Method 5, Section 4.2, ''Container No. 2,'' using TCE instead of acetone.

Brush and rinse the inside of the cyclone, cyclone collection flask, and the front half of the filter holder. Brush and rinse each surface three times or more, if necessary, to remove visible particulate.

4.2.3 Container No. 3 (Silica Gel). Same procedure as in Method 5, Section 4.2, ''Container No. 3.''

4.2.4 Impinger Water. Treat the impingers as follows: Make a notation of any color or film in the liquid catch. Follow the same procedure as in Method 5, Section 4.2, ''Impinger Water.''

4.2.5 Blank. Save a portion of the TCE used for cleanup as a blank. Take 200 ml of this TCE directly from the wash bottle being used and place it in a glass sample container labeled ''TCE blank.''

4.3 Analysis. Record the data required on a sheet such as the one shown in Figure 5A–1. Handle each sample container as follows:

4.3.1 Container No. 1 (Filter). Transfer the filter from the sample container to a tared glass weighing dish and desiccate for 24 hours in a desiccator containing anhydrous calcium sulfate. Rinse Container No. 1 with a measured amount of TCE and analyze this rinse with the contents of Container No. 2. Weigh the filter to a constant weight. For the purpose of Section 4.3, the term ''constant weight'' means a difference of no more than 10 percent or 2 mg (whichever is greater) between two consecutive weighings made 24 hours apart. Report the ''final weight'' to the nearest 0.1 mg as the average of these two values.

4.3.2 Container No. 2 (Probe to Filter Holder). Before adding the rinse from Container No. 1 to Container No. 2, note the level of liquid in the container and confirm on the analysis sheet whether or not leakage occurred during transport. If noticeable leakage occurred, either void the sample or take steps, subject to the approval of the Administrator, to correct the final results.

Measure the liquid in this container either volumetrically to ±1 ml or gravimetrically to ±0.5 g. Check to see if there is any appreciable quantity of condensed water present in the TCE rinse (look for a boundary layer or phase separation). If the volume of condensed water appears larger than 5 ml, separate the oil-TCE fraction from the water fraction using a separatory funnel. Measure the volume of the water phase to the nearest ml; adjust the stack gas moisture content, if necessary (see Sections 6.4 and 6.5). Next, extract the water phase with several 25-ml portions of TCE until, by visual observation, the TCE does not remove any additional organic material. Evaporate the remaining water fraction to dryness at 93 °C (200 °F), desiccate for 24 hours, and weigh to the nearest 0.1 mg.

Treat the total TCE fraction (including TCE from the filter container rinse and water phase extractions) as follows: Transfer the TCE and oil to a tared beaker and evaporate at ambient temperature and pressure. The evaporation of TCE from the solution may take several days. Do not desiccate the sample until the solution reaches an apparent constant volume or until the odor of TCE is not detected. When it appears that the TCE has evaporated, desiccate the sample and weigh it at 24-hour intervals to obtain a ''constant weight'' (as defined for Container No. 1 above). The ''total weight'' for Container No. 2 is the sum of the evaporated particulate weight of the TCE-oil and water phase fractions. Report the results to the nearest 0.1 mg.

4.3.3 Container No. 3 (Silica Gel). This step may be conducted in the field. Weigh the spent silica gel (or silica gel plus impinger) to the nearest 0.5 g using a balance.

4.3.4 ''TCE Blank'' Container. Measure TCE in this container either volumetrically or gravimetrically. Transfer the TCE to a tared 250-ml beaker and evaporate to dryness at ambient temperature and pressure. Desiccate for 24 hours and weigh to a constant weight. Report the results to the nearest 0.1 mg.

NOTE: In order to facilitate the evaporation of TCE liquid samples, these samples may be dried in a controlled temperature oven at temperatures up to 38 °C (100 °F) until the liquid is evaporated.

4.4 Quality Control Procedures. A quality control (QC) check of the volume metering system at the field site is suggested before collecting the sample. Use the procedure defined in Method 5, Section 4.4.

5. *Calibration*

Calibrate the sampling train components according to the indicated sections of Method 5: Probe Nozzle (5.1), Pitot Tube Assembly (5.2), Metering System (5.3), Probe Heater (5.4), Temperature Gauges (5.5), Leak Check of Metering System (5.6), and Barometer (5.7).

6. *Calculations*

6.1 Nomenclature. Same as in Method 5, Section 6.1, with the following additions:

C_t=TCE blank residue concentration, mg/mg.
m_t=Mass of residue of TCE after evaporation, mg.
V_{pc}=Volume of water collected in precollector, ml.
V_t=Volume of TCE blank, ml.
V_{tw}=Volume of TCE used in wash, ml.

W_t=Weight of residue in TCE wash, mg.
ρ_T=Density of TCE, mg/ml (see label on bottle).

6.2 Dry Gas Meter Temperature and Orifice Pressure Drop. Using the data obtained in this test, calculate the average dry gas meter temperature and average orifice pressure drop (see Figure 5–2 of Method 5).

6.3 Dry Gas Volume. Using the data from this test, calculate $V_{m(std)}$ by using Equation 5–1 of Method 5. If necessary, adjust the volume for leakages.

6.4 Volume of Water Vapor.

$$V_{w(std)}=K_1(V_{lc}+V_{pc})$$

Eq. 5A–1

Where:

K_1=0.00133 m^3/ml for metric units.
=0.04707 ft^3/ml for English units.

6.5 Moisture Content.

$$B_{ws}=V_{w(std)}/[V_{m(std)}+V_{w(std)}]$$

Eq. 5A–2

NOTE: In saturated or water droplet-laden gas streams, two calculations of the moisture content of the stack gas shall be made, one from the impinger and precollector analysis (Equations 5A–1 and 5A–2) and a second from the assumption of saturated conditions. The lower of the two values of moisture content shall be considered correct. The procedure for determining the moisture content based upon assumption of saturated conditions is given in the note of Section 1.2 of Method 4. For the purpose of this method, the average stack gas temperature from Figure 5–2 of Method 5 may be used to make this determination, provided that the accuracy of the in-stack temperature sensor is within ±1 °C (2 °F).

6.6 TCE Blank Concentration.

$$C_t=m_t/V_t\rho_t$$

Eq. 5A–3

6.7 TCE Wash Blank.

$$W_t=C_t\ V_{tw}\rho_t$$

Eq. 5A–4

6.8 Total Particulate Weight. Determine the total particulate catch from the sum of the weights obtained from Containers 1, 2, and 3, less the TCE blank.

6.9 Particulate Concentration.

$$c_s=K_2m_n/V_{m(std)}$$

Eq. 5A–5

Where:

K_2=0.001 g/mg.

6.10 Isokinetic Variation and Acceptable Results. Same as in Method 5, Sections 6.11 and 6.12, respectively.

7. *Bibliography*

The bibliography for Method 5A is the same as that for Method 5.

METHOD 5B—DETERMINATION OF NONSULFURIC ACID PARTICULATE MATTER FROM STATIONARY SOURCES

1. *Applicability and Principle.*

1.1 Applicability. This method is to be used for determining nonsulfuric acid particulate matter from stationary sources. Use of this method must be specified by an applicable subpart, or approved by the Administrator, U.S. Environmental Protection Agency, for a particular application.

1.2 Principle. Particulate matter is withdrawn isokinetically from the source using the Method 5 train at 160°C (320°F). The collected sample is then heated in the oven at 160°C (320°F) for 6 hours to volatilize any condensed sulfuric acid that may have been collected, and the nonsulfuric acid particulate mass is determined gravimetrically.

2. *Procedure.*

The procedure is identical to EPA Method 5 except for the following:

2.1 Initial Filter Tare. Oven dry the filter at 160±5°C (320 ±10°F) for 2 to 3 hours, cool in a desiccator for 2 hours, and weigh. Desiccate to constant weight to obtain the initial tare. Use the applicable specifications and techniques of Section 4.1.1 of Method 5 for this determination.

2.2 Probe and Filter Temperatures. Maintain the probe outlet and filter temperatures at 160±14°C (320±25°F).

2.3 Analysis. Dry the probe sample at ambient temperature. Then oven-dry the probe and filter samples at a temperature of 160±5°C °C (320±10°F) for 6 hours. Cool in a desiccator for 2 hours, and weigh to constant weight. Use the applicable specifications and techniques of Section 4.3 of Method 5 for this determination.

METHOD 5C—[RESERVED]

METHOD 5D—DETERMINATION OF PARTICULATE MATTER EMISSIONS FROM POSITIVE PRESSURE FABRIC FILTERS

1. *Applicability and Principle*

1.1 Applicability. This method applies to the determination of particulate matter emissions from positive pressure fabric filters. Emissions are determined in terms of concentration (mg/m^3) and emission rate (kg/h).

The General Provisions of 40 CFR Part 60, §60.8(e), require that the owner or operator of an affected facility shall provide performance testing facilities. Such performance testing facilities include sampling ports, safe sampling platforms, safe access to sampling sites, and utilities for testing. It is intended that affected facilities also provide sampling locations that meet the specification for adequate stack length and minimal flow disturbances as described in Method 1. Provisions for testing are often overlooked factors in designing fabric filters or are extremely

costly. The purpose of this procedure is to identify appropriate alternative locations and procedures for sampling the emissions from positive pressure fabric filters. The requirements that the affected facility owner or operator provide adequate access to performance testing facilities remain in effect.

1.2 Principle. Particulate matter is withdrawn isokinetically from the source and collected on a glass fiber filter maintained at a temperature at or above the exhaust gas temperature up to a nominal 120 °C (120±14 °C or 248±25 °F). The particulate mass, which includes any material that condenses at or above the filtration temperature, is determined gravimetrically after removal of uncombined water.

2. *Apparatus*

The equipment requirements for the sampling train, sample recovery, and analysis are the same as specified in Sections 2.1, 2.2, and 2.3, respectively, of Method 5 or Method 17.

3. *Reagents*

The reagents used in sampling, sample recovery, and analysis are the same as specified in Sections 3.1, 3.2, and 3.3, respectively, of Method 5 or Method 17.

4. *Procedure*

4.1 Determination of Measurement Site. The configurations of positive pressure fabric filter structures frequently are not amenable to emission testing according to the requirements of Method 1. Following are several alternatives for determining measurement sites for positive pressure fabric filters.

4.1.1 Stacks Meeting Method 1 Criteria. Use a measurement site as specified in Method 1, Section 2.1.

4.1.2 Short Stacks Not Meeting Method 1 Criteria. Use stack extensions and the procedures in Method 1. Alternatively, use flow straightening vanes of the ''egg-crate'' type (see Figure 5D–1). Locate the measurement site downstream of the straightening vanes at a distance equal to or greater than two times the average equivalent diameter of the vane openings and at least one-half of the overall stack diameter upstream of the stack outlet.

4.1.3 Roof Monitor or Monovent. (See Figure 5D–2.) For a positive pressure fabric filter equipped with a peaked roof monitor, ridge vent, or other type of monovent, use a measurement site at the base of the monovent. Examples of such locations are shown in Figure 5D–2. The measurement site must be upstream of any exhaust point (e.g., louvered vent).

4.1.4 Compartment Housing. Sample immediately downstream of the filter bags directly above the tops of the bags as shown in the examples in Figure 5D–2. Depending on the housing design, use sampling ports in the housing walls or locate the sampling equipment within the compartment housing.

4.2 Determination of Number and Location of Traverse Points. Locate the traverse points according to Method 1, Section 2.3. Because a performance test consists of at least three test runs and because of the varied configurations of positive pressure fabric filters, there are several schemes by which the number of traverse points can be determined and the three test runs can be conducted.

4.2.1 Single Stacks Meeting Method 1 Criteria. Select the number of traverse points according to Method 1. Sample all traverse points for each test run.

4.2.2 Other Single Measurement Sites. For a roof monitor or monovent, single compartment housing, or other stack not meeting Method 1 criteria, use at least 24 traverse points. For example, for a rectangular measurement site, such as a monovent, use a balanced 5 x 5 traverse point matrix. Sample all traverse points for each test run.

4.2.3 Multiple Measurement Sites. Sampling from two or more stacks or measurement sites may be combined for a test run, provided the following guidelines are met:

(a) All measurement sites up to 12 must be sampled. For more than 12 measurement sites, conduct sampling on at least 12 sites or 50 percent of the sites, whichever is greater. The measurement sites sampled should be evenly, or nearly evenly, distributed among the available sites; if not, all sites are to be sampled.

(b) The same number of measurement sites must be sampled for each test run.

(c) The minimum number of traverse points per test run is 24. An exception to the 24-point minimum would be a test combining the sampling from two stacks meeting Method 1 criteria for acceptable stack length, and Method 1 specifies fewer than 12 points per site.

(d) As long as the 24 traverse points per test run criterion is met, the number of traverse points per measurement site may be reduced to eight.

Alternatively, conduct a test run for each measurement site individually using the criteria in Section 4.2.1 or 4.2.2 for number of traverse points. Each test run shall count toward the total of three required for a performance test. If more than three measurement sites are sampled, the number of traverse points per measurement site may be reduced to eight as long as at least 72 traverse points are sampled for all the tests.

The following examples demonstrate the procedures for sampling multiple measurement sites.

Example 1: A source with nine circular measurement sites of equal areas may be tested as follows: For each test run, traverse three measurement sites using four points per diameter (eight points per measurement site). In this manner, test run number 1 will include sampling from sites 1, 2, and 3; run 2

will include samples from sites 4, 5, and 6; and run 3 will include sites 7, 8, and 9. Each test area may consist of a separate test of each measurement site using eight points. Use the results from all nine tests in determining the emission average.

Example 2: A source with 30 rectangular measurement sites of equal areas may be tested as follows: For each of three test runs, traverse five measurement sites using a 3 x 3 matrix of traverse points for each site. In order to distribute the sampling evenly over all the available measurement sites while sampling only 50 percent of the sites, number the sites consecutively from 1 to 30 and sample all the even numbered (or odd numbered) sites. Alternatively, conduct a separate test of each of 15 measurement sites using Section 4.2.1 or 4.2.2 to determine the number and location of traverse points, as appropriate.

Example 3: A source with two measurement sites of equal areas may be tested as follows: For each test of three test runs, traverse both measurement sites using Section 4.2.3 in determining number of traverse points. Alternatively, conduct two full emission test runs of each measurement site using the criteria in Section 4.2.1 or 4.2.2 to determine the number of traverse points.

Other test schemes, such as random determination of traverse points for a large number of measurement sites, may be used with prior approval from the Administrator.

4.3 Velocity Determination. The velocities of exhaust gases from postitive pressure baghouses are often too low to measure accurately with the type S pitot specified in Method 2 [i.e., velocity head <1.3 mm H_2O (0.05 in. H_2O)]. For these conditions, measure the gas flow rate at the fabric filter inlet following the procedures in Method 2. Calculate the average gas velocity at the measurement site as follows:

$$\bar{v} = \frac{Q_i}{A_o} \bullet \frac{T_o}{T_i} \qquad \text{Eq. 5D-1}$$

Where:

v=Average gas velocity at the measurement site(s), m/s (ft/s).

Q_i=Inlet gas volume flow rate, m^3/s (ft^3/s).

A_o=Measurement site(s) total cross-sectional area, m^2 (ft^2).

T_o=Temperature of gas at measurement site, °K (°R)

T_i=Temperature of gas at inlet, °K (°R).

Use the average velocity calculated for the measurement site in determining and maintaining isokinetic sampling rates. Note: All sources of gas leakage, into or out of the fabric filter housing between the inlet measurement site and the outlet measurement site must be blocked and made leak-tight.

Velocity determinations at measurement sites with gas velocities within the range measurable with the type S pitot [i.e., velocity head >1.3 mm H_2O (0.05 in. H_2O)] shall be conducted according to the procedures in Method 2.

4.4 Sampling. Follow the procedures specified in Section 4.1 of Method 5 or Method 17 with the exceptions as noted above.

4.5 Sample Recovery. Follow the procedures specified in Section 4.2 of Method 5 or Method 17.

4.6 Sample Analysis. Follow the procedures specified in Section 4.3 of Method 5 or Method 17.

4.7 Quality Control Procedures. A QC check of the volume metering system at the field site is suggested before collecting the sample. Use the procedure defined in Section 4.4 of Method 5.

5. *Calibration*

Follow the procedures as specified in Section 5 of Method 5 or Method 17.

6. *Calculations*

Follow the procedures as specified in Section 6 of Method 5 or Method 17 with the exceptions as follows:

6.1 Total volume flow rate may be determined using inlet velocity measurements and stack dimensions.

6.2 Average Particulate Concentration. For multiple measurement sites, calculate the average particulate concentration as follows:

$$\bar{C} = \frac{\sum_{i=1}^{n} m_i}{\sum_{i=1}^{n} Vol_i} \qquad \text{Eq. 5D-2}$$

Where:

m_i=The mass collected for run i of n, mg(gr).

Vol_i=The sample volume collected for run i of n, sm^3 (scf).

C=Average concentration of particulate for all n runs, mg/sm^3 (gr/scf).

7. *Bibliography*

The bibliography is the same as for Method 5.

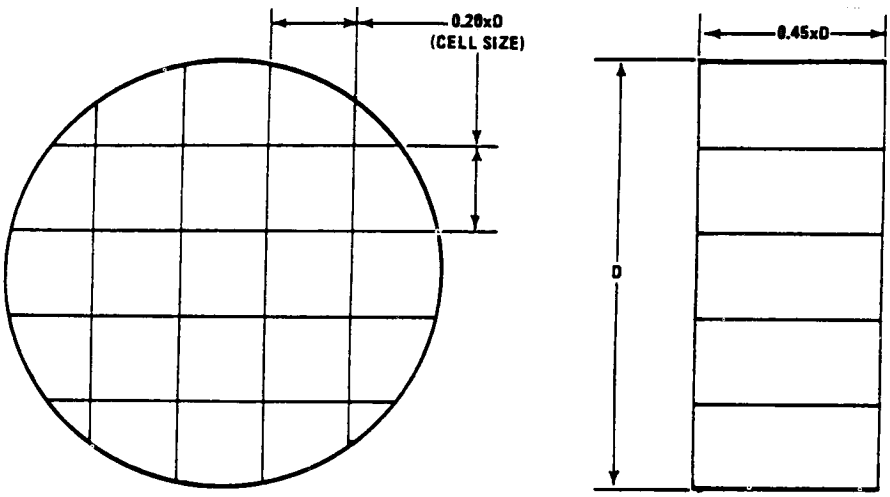

NOTE: POSITION STRAIGHTENERS SO THAT CELL SIDES ARE LOCATED APPROX. 45° FROM TRAVERSE DIA's.

Figure 5D-1. Example of flow straightening vanes.

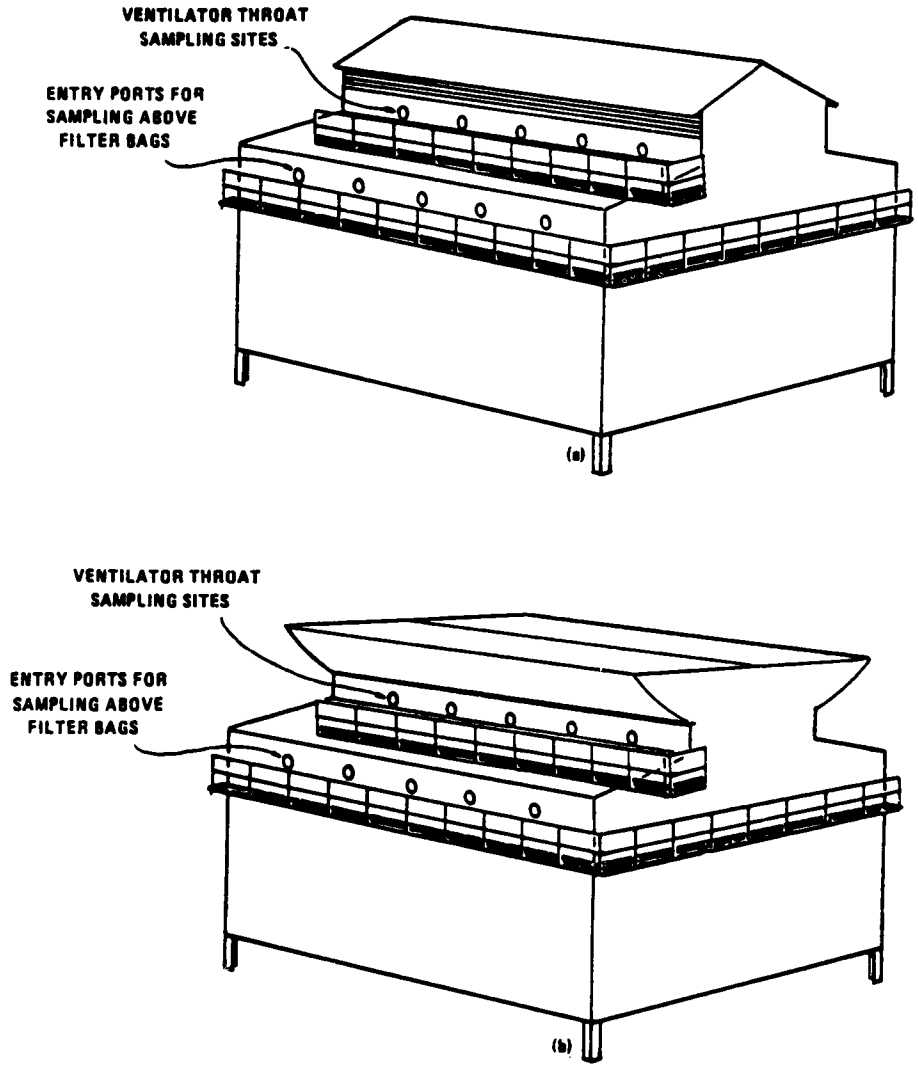

Figure 5D-2. Acceptable sampling site locations for: (a) peaked roof; and (b) ridge vent type fabric filters.

METHOD 5E—DETERMINATION OF PARTICULATE EMISSIONS FROM THE WOOL FIBERGLASS INSULATION MANUFACTURING INDUSTRY

1. *Applicability and Principle*

1.1 Applicability. This method is applicable for the determination of particulate emissions from wool fiberglass insulation manufacturing sources.

1.2 Principle. Particulate matter is withdrawn isokinetically from the source and collected on a glass fiber filter maintained at a temperature in the range of 120 °±14 °C (248 °±25 °F) and in solutions of 0.1 *N* NaOH. The filtered particulate mass, which includes any

material that condenses at or above the filtration temperature, is determined gravimetrically after removal of uncombined water. The condensed particulate material collected in the impinger solutions is determined as total organic carbon (TOC) using a nondispersive infrared type of analyzer. The sum of the filtered particulate mass and the condensed particulate matter is reported as the total particulate mass.

2. *Apparatus*

2.1 Sampling Train. The equipment list for the sampling train is the same as described in Section 2.1 of Method 5 except as follows:

2.1.1 Probe Liner. Same as described in Section 2.1.2 of Method 5 except use only borosilicate or quartz glass liners.

2.1.2 Filter Holder. Same as described in Section 2.1.5 of Method 5 with the addition of a leak-tight connection in the rear half of the filter holder designed for insertion of a thermocouple or other temperature gauge for measuring the sample gas exist temperature.

2.2 Sample Recovery. The equipment list for sample recovery is the same as described in Section 2.2 of Method 5 except three wash bottles are needed instead of two and only glass storage bottles and funnels may be used.

2.3 Analysis. The equipment list for analysis is the same as Section 2.3 of Method 5 with the additional equipment for TOC analysis as described below:

2.3.1 Sample Blender or Homogenizer. Waring type of ultrasonic.

2.3.2 Magnetic Stirrer.

2.3.3 Hypodermic Syringe. 0- to 100-µl capacity.

2.3.4 Total Organic Carbon Analyzer. Beckman Model 915 with 215 B infrared analyzer or equivalent and a recorder.

2.3.5 Beaker. 30 ml.

2.3.6 Water Bath. Temperature-controlled.

2.3.7 Volumetric Flasks. 1,000 ml and 500 ml.

3. *Reagents*

3.1 Sampling. The reagents used in sampling are the same as used in Reference Method 5 with the addition of 0.1 *N* NaOH (dissolve 40 g of ACS reagent grade NaOH in distilled water and dilute to 1 liter).

3.2 Sample Recovery. The reagents used in sample recovery are the same as used in Method 5 with the addition of distilled water and 0.1 *N* NaOH as described in Section 3.1.

3.3 Analysis. The reagents used in analysis are the same as in Method 5 except as follows:

3.3.1 Carbon Dioxide-Free Water. Distilled or deionized water that has been freshly boiled for 15 minutes and cooled to room temperature while preventing exposure to ambient air with a cover vented with an ascarite tube.

3.3.2 Hydrochloric Acid. HCl, concentrated, with a dropper.

3.3.3 Organic Carbon Stock Solution. Dissolve 2.1254 g of dried potassium biphthalate in CO_2-free water and dilute to 1 liter in a volumetric flask. This solution contains 1,000 mg/l organic carbon.

3.3.4 Inorganic Carbon Stock Solution. Dissolve 4.404 g anhydrous sodium carbonate in about 500 ml of CO_2-free water in a 1 liter volumetric flask. Add 3.497 g anhydrous sodium bicarbonate to the flask and dilute to 1 liter with CO_2-free water. This solution contains 1,000 mg/l inorganic carbon.

3.3.5 Oxygen Gas. CO_2-free.

4. *Procedure*

4.1 Sampling. The sampling procedures are the same as in Section 4.1 of Method 5 except as follows:

4.1.1 Filtration Temperature. The temperature of the filtered gas stream, rather than the filter compartment air temperature, is maintained at 120°±14°C (248°±25°F).

4.1.2 Impinger Solutions. 0.1 *N* NaOH is used in place of water in the impingers. The volumes of the solutions are the same as in Method 5.

4.2 Sample Recovery. The sample recovery procedure is as follows:

Water is used to rinse and clean the probe parts prior to the acetone rinse. Save portions of the water, acetone, and 0.1 *N* NaOH used for cleanup as blanks following the procedure as in Section 4.2 of Method 5.

NOTE: All parts of the sample collection portion of the train (e.g., probe and nozzle, filter holder, impinger glassware) must be free of organic solvent residue before sample collection. It is necessary that all sampling apparatus that have been rinsed with acetone be flushed twice with water or dilute NaOH before the sample run. The rinse solutions from this cleaning process should be discarded. If other solvents that are not readily soluble in water (e.g., TCE) are used, place the exposed sampling apparatus in a drying oven at 105°C for at least 30 minutes.

Container No. 1. The filter is removed and stored in the same manner as in Section 4.2 of Method 5.

Container No. 2. Use water to rinse the sample nozzle, probe, and front half of the filter holder three times in the manner described in Section 4.2 of Method 5 except that no brushing is done. Put all the wash water in one container, seal, and label.

Container No. 3. Rinse and brush the sample nozzle, probe, and front half of the filter holder with acetone as described for Container No. 2 in Section 4.2 of Method 5.

Container No. 4. Place the contents of the silica gel impinger in its original container as described for Container No. 3 in Section 4.2 of Method 5.

Container No. 5. Measure the liquid in the first three impingers and record the volume

or weight as described for the Impinger Water in Section 4.2 of Method 5. Do not discard this liquid, but place it in a sample container using a glass funnel to aid in the transfer from the impingers or graduated cylinder (if used) to the sample container. Rinse each impinger thoroughly with 0.1 *N* NaOH three times, as well as the graduated cylinder (if used) and the funnel, and put these rinsings in the same sample container. Seal the container and label to identify its contents clearly.

4.3 Analysis. The procedures for analysis are the same as in Section 4.3 of Method 5 with exceptions noted as follows:

Container No. 1. Determination of weight gain on the filter is the same as described for Container No. 1 in Section 4.3 of Method 5 except that the filters must be dried at 20°±6°C (68°F±10°F) and at ambient pressure.

Containers Nos. 2 and 3. Analyze the contents of Containers Nos. 2 and 3 as described for Container No. 2 in Section 4.3 of Method 5 except that evaporation of the samples must be at 20°±6°C (68°±10°F) and at ambient pressure.

Container No. 4. Weigh the spent silica gel as described for Container No. 3 in Section 4.3 of Method 5.

''Water and Acetone Blank'' Containers. Determine the water and acetone blank values following the procedures for Acetone Blank Container in Section 4.3 of Method 5. Evaporate the samples at ambient temperature [20°±6°C (68°±10° F)] and pressure.

Container No. 5. For the determination of total organic carbon, perform two analyses on successive identical samples, i.e., total carbon and inorganic carbon. The desired quantity is the difference between the two values obtained. Both analyses are based on conversion of sample carbon into carbon dioxide for measurement by a nondispersive infrared analyzer. Results of analyses register as peaks on a strip chart recorder.

The principal differences between operating parameters for the two channels involve the combustion tube packing material and temperature. In the total carbon channel, a high temperature [950°C (1740°F)] furnace heats a Hastelloy combustion tube packed with cobalt oxide-impregnated asbestos fiber. The oxygen in the carrier gas, the elevated temperature, and catalytic effect of the packing result in oxidation of both organic and inorganic carbonaceous material to CO_2 and steam. In the inorganic carbon channel, a low temperature [150°C (300°F)] furnace heats a glass tube containing quartz chips wetted with 85 percent phosphoric acid. The acid liberates CO_2 and steam from inorganic carbonates. The operating temperature is below that required to oxidize organic matter. Follow the manufacturer's instructions for assembly, testing, calibration, and operation of the analyzer.

As samples collected in 0.1 *N* NaOH often contain a high measure of inorganic carbon that inhibits repeatable determinations of TOC, sample pretreatment is necessary. Measure and record the liquid volume of each sample. If the sample contains solids or an immiscible liquid, homogenize the sample with a blender or ultrasonics until satisfactory repeatability is obtained. Transfer a representative portion of 10 to 15 ml to a 30-ml beaker, acidify with about 2 drops of concentrated HCl to a pH of 2 or less. Warm the acidified sample at 50°C (120°F) in a water bath for 15 minutes. While stirring the sample with a magnetic stirrer, withdraw a 20- to 50-µl sample from the beaker and inject it into the total carbon port of the analyzer. Measure the peak height. Repeat the injections until three consecutive peaks are obtained within ±10 percent of the average.

Repeat the analyses for all the samples and the 0.1 *N* NaOH blank. Prepare standard curves for total carbon and for inorganic carbon of 10, 20, 30, 40, 50, 60, 80, and 100 mg/l by diluting with CO_2-free water 10, 20, 30, 40, and 50 ml of the two stock solutions to 1,000 ml and 30, 40, and 50 ml of the two stock solutions to 500 ml. Inject samples of these solutions into the analyzer and record the peak heights as described above. The acidification and warming steps are not necessary for preparation of the standard curve.

Ascertain the sample concentrations for the samples from the corrected peak heights for the samples by reference to the appropriate standard curve. Calculate the corrected peak height for the standards and the samples by deducting the blank correction as follows:

$$\text{Corrected peak height} = A - B$$

Eq. 5E–1

Where:

A = Peak height of standard or sample, mm or other appropriate unit.

B = Peak height of blank, mm or other appropriate unit.

If samples must be diluted for analysis, apply an appropriate dilution factor.

5. *Calibration*

Calibration of sampling and analysis equipment is the same as in Section 5 of Method 5 with the addition of the calibration of the TOC analyzer described in Section 4.3 of this method.

6. *Calculations*

The calculations and nomenclature for the calculations are the same as described in Section 6 of Method 5 with the addition of the following:

6.1 Mass of Condensed Particulate Material Collected.

$$M_c = 0.001\, C_{toc}\, V_s$$

Eq. 5E–2

Where:

0.001=Liters per milliliter.
m_c=Mass of condensed particulate material collected in the impingers measured as TOC, mg.
C_{toc}=Concentration of TOC in the liquid sample from TOC analysis in Section 4.3, mg/l.
V_s=Total volume of liquid sample, ml.

6.2 Concentration of Condensed Particulate Material.

$$C_c = 0.001\left[m_c / V_{m(std)}\right] \quad \text{Eq. 5E-3}$$

Where:

0.001=Grams per milligram.
C_c=Concentration of condensed particulate matter in stack gas, dry basis, corrected to standard condition, g/dscm.
$V_{m(std)}$=Volume of gas sample measured by the dry gas meter, corrected to standard conditions, dscm, from Section 6.3 of Method 5.

6.3 Total Particulate Concentration.

$$C_t = C_s + C_c \quad \text{Eq. 5E-4}$$

Where:

C_t=Total particulate concentration, dry basis, corrected to standard conditions, g/dscm.
C_s=Concentration of filtered particulate matter in stack gas, dry basis, corrected to standard conditions, g/dscm, from Equation 5–6 of Method 5.

7. *Bibliography*

The bibliography is the same as in Method 5 with the addition of the following:

1. American Public Health Association, American Water Works Association, Water Pollution Control Federation. Standard Methods for the Examination of Water and Wastewater. Fifteenth Edition. Washington, DC 1980.

METHOD 5F—DETERMINATION OF NONSULFATE PARTICULATE MATTER FROM STATIONARY SOURCES

1. *Applicability and Principle.*

1.1 Applicability. This method is to be used for determining nonsulfate particulate matter from stationary sources. Use of this method must be specified by an applicable subpart of the standards, or approved by the Administrator, U.S. Environmental Protection Agency, for a particular application.

1.2 Principle. Particulate matter is withdrawn isokinetically from the source using the Method 5 train at 160°C (320°F). The collected sample is then extracted with water. A portion of the extract is analyzed for sulfate content. The remainder is neutralized with ammonium hydroxide before it is dried and weighed.

2. *Apparatus.*

The apparatus is the same as Method 5 with the following additions.

2.1 Analysis.

2.1.1 Erlenmeyer Flasks. 125-ml, with ground glass joints.

2.1.2 Air Condenser. With ground glass joint compatible with the Erlenmeyer flasks.

2.1.3 Beakers. 250-ml.

2.1.4 Volumetric Flasks. 1-liter, 500-ml (one for each sample), 200-ml, and 50-ml (one for each sample and standard).

2.1.5 Pipets. 5-ml (one for each sample and standard).

2.1.6 Ion Chromatograph. The ion chromatograph should have at least the following components.

2.1.6.1 Columns. An anion separation or other column capable of resolving the sulfate ion from other species present and a standard anion suppressor column. Suppressor columns are produced as proprietary items; however, one can be produced in the laboratory using the resin available from BioRad Company, 32nd and Griffin Streets, Richmond, California. Other systems which do not use suppressor columns may also be used.

2.1.6.2 Pump. Capable of maintaining a steady flow as required by the system.

2.1.6.3 Flow Gauges. Capable of measuring the specified system flow rate.

2.1.6.4 Conductivity Detector.

2.1.6.5 Recorder. Compatible with the output voltage range of the detector.

3. *Reagents.*

The reagents are the same as for Method 5 with the following exceptions:

3.1 Sample Recovery. Water, deionized distilled to conform to American Society for Testing and Materials Specification D1193–74, Type 3, is needed. At the option of the analyst, the $KMnO_4$ test for oxidizable organic matter may be omitted when high concentrations of organic matter are not expected to be present.

3.2 Analysis. The following are required:

3.2.1 Water. Same as in Section 3.1.

3.2.2 Stock Standard Solution, 1 mg $(NH_4)_2SO_4$/ml. Dry an adequate amount of primary standard grade ammonium sulfate at 105° to 110 °C for a minimum of 2 hours before preparing the standard solution. Then dissolve exactly 1.000 g of dried $(NH_4)_2SO_4$ in water in a 1-liter volumetric flask, and dilute to 1 liter. Mix well.

3.2.3 Working Standard Solution, 25 µg $(NH_4)_2SO_4$/ml. Pipet 5 ml of the stock standard solution into a 200-ml volumetric flask. Dilute to 200 ml with water.

3.2.4 Eluent Solution. Weigh 1.018 g of sodium carbonate (Na_2CO_3) and 1.008 g of sodium bicarbonate ($NaHCO_3$), and dissolve in 4 liters of water. This solution is 0.0024 M Na_2CO_3/0.003 M $NaHCO_3$. Other eluents appropriate to the column type and capable of resolving sulfate ion from other species present may be used.

3.2.5 Ammonium Hydroxide. Concentrated, 14.8 M.

3.2.6 Phenolphthalein Indicator. 3,3-Bis(4-hydroxyphenyl)-1-(3H)-isobenzofuranone. Dissolve 0.05 g in 50 ml of ethanol and 50 ml of water.

4. *Procedure.*

4.1 Sampling. The sampling procedure is the same as Method 5, Section 4.1, except that the probe outlet and filter temperatures shall be maintained at 160°±14 °C (320°±25 °F).

4.2 Sample Recovery. The sample recovery procedure is the same as Method 5, Section 4.2, except that the recovery solvent shall be water instead of acetone.

4.3 Analysis.

4.3.1 Sample Extraction. Cut the filter into small pieces, and place it in a 125-ml Erlenmeyer flask with a ground glass joint equipped with an air condenser. Rinse the shipping container with water, and pour the rinse into the flask. Add additional water to the flask until it contains about 75 ml, and place the flask on a hot plate. Gently reflux the contents for 6 to 8 hours. Cool the solution, and transfer it to a 500-ml volumetric flask. Rinse the Erlenmeyer flask with water, and transfer the rinsings to the volumetric flask including the pieces of filter.

Transfer the probe rinse to the same 500-ml volumetric flask with the filter sample. Rinse the sample bottle with water, and add the rinsings to the volumetric flask. Dilute the sample to exactly 500 ml with water.

4.3.2 Sulfate (SO_4) Analysis. Allow the sample to settle until all solid material is at the bottom of the volumetric flask. If necessary, centrifuge a portion of the sample. Pipet 5 ml of the sample into a 50-ml volumetric flask, and dilute to 50 ml with water. Prepare a standard calibration curve according to Section 5.1. Analyze the set of standards followed by the set of samples using the same injection volume for both standards and samples. Repeat this analysis sequence followed by a final analysis of the standard set. Average the results. The two sample values must agree within 5 percent of their mean for the analysis to be valid. Perform this duplicate analysis sequence on the same day. Dilute any sample and the blank with equal volumes of water if the concentration exceeds that of the highest standard.

Document each sample chromatogram by listing the following analytical parameters: Injection point, injection volume, sulfate retention time, flow rate, detector sensitivity setting, and recorder chart speed.

4.3.3 Sample Residue. Transfer the remaining contents of the volumetric flask to a tared 250-ml beaker. Rinse the volumetric flask, and add the rinsings to the tared beaker. Make certain that all particulate matter is transferred to the beaker. Evaporate the water in an oven heated to 105 °C until only about 100 ml of water remains. Remove the beakers from the oven, and allow them to cool.

After the beakers have cooled, add five drops of phenolphthalein indicator, and then add concentrated ammonium hydroxide until the solution turns pink. Return the samples to the oven at 105 °C, and evaporate the samples to dryness. Cool the samples in a desiccator, and weigh the samples to constant weight.

4.4 Blanks.

4.4.1 Filter Blank. Choose a clean filter from the same lot as those used in the testing. Treat the blank filter as a sample, and analyze according to Sections 4.3.1 and 4.3.2.

4.4.2 Water. Transfer a measured volume of water between 100 and 200 ml into a tared 250-ml beaker. Treat the blank as a sample, and analyze according to Section 4.3.3.

5. *Calibration.*

The calibration procedure is the same as Method 5, Section 5, with the following additions:

5.1 Standard Calibration Curve. Prepare a series of five standards by adding 1.0, 2.0, 4.0, 6.0, and 10.0 ml of working standard solution (25 µg/ml) to a series of five 50-ml volumetric flasks. (The standard masses will equal 25, 50, 100, 150, and 250 µg.) Dilute each flask to volume with water, and mix well. Analyze with the samples as described in Section 4.3. Prepare or calculate a linear regression plot of the standard masses in µg (x-axis) versus their responses (y-axis). (Take peak height measurements with symmetrical peaks; in all other cases, calculate peak areas.) From this line, or equation, determine the slope, and calculate its reciprocal which is the calibration factor, S. If any point deviates from the line by more than 7 percent of the concentration at that point, remake and reanalyze that standard. This deviation can be determined by multiplying S times the response for each standard. The resultant concentrations must not differ by more than 7 percent from each known standard mass (i.e., 25, 50, 100, 150, and 250 µg).

5.2 Conductivity Detector. Calibrate according to manufacturer's specifications prior to initial use.

6. *Calculations.*

Calculations are the same as Method 5, Section 6, with the following additions:

6.1 Nomenclature.

C_w=Water blank residue concentration, mg/ml.

F=Dilution factor (required only if sample dilution was needed to reduce the concentration into the range of calibration).

H_s=Sample response, mm for height or mm^2 for area.

H_b=Filter blank response, mm for height or mm^2 for area.

m_b=Mass of beaker used to dry sample, mg.

m_f=Mass of sample filter, mg.

m_n=Mass of nonsulfate particulate matter, mg.

m_s=Mass of ammonium sulfate in the sample, mg.
m_t=Mass of beaker, filter, and dried sample, mg.
m_w=Mass of residue after evaporation of water blank, mg.
S=Calibration factor, µg/mm.
V_b=Volume of water blank, ml.
V_s=Volume of sample evaporated, 495 ml.

6.2 Water Blank Concentration.

$$C_w = \frac{m_w}{V_b} \quad \text{Eq. 5F-1}$$

6.3 Mass of Ammonium Sulfate.

$$m_s = \frac{\left(99\left(H_s - H_b\right)\right)}{(1000)} \quad \text{Eq. 5F-2}$$

6.4 Mass of Nonsulfate Particulate Matter.

$$m_n = m_t - m_b - m_s - m_f - V_s C_w \quad \text{Eq. 5F–3}$$

7. *Alternative Procedures*

7.1 The following procedure may be used as an alternative to the procedure in Section 4.3.

7.1.1 Apparatus. Same as for Method 6, Sections 2.3.3 to 2.3.6 with the following additions.

7.1.1.1 Beakers. 250-ml, one for each sample, and 600-ml.

7.1.1.2 Oven. Capable of maintaining temperatures of 75 ± 5 °C and 105 ±5 °C.

7.1.1.3 Buchner Funnel.

7.1.14 Glass Columns. 25-mm × 305-mm (1-in. × 12-in.) with Teflon stopcock.

7.1.1.5 Volumetric Flasks. 50-ml and 500-ml, one set for each sample, and 100-ml, 200-ml, and 1000-ml.

7.1.1.6 Pipettes. Two 20-ml and one 200-ml, one set for each sample, and 5-ml.

7.1.1.7 Filter Flasks. 500-ml.

7.1.1.8 Polyethylene Bottle. 500-ml, one for each sample.

7.1.2 Reagents. Same as Method 6, Sections 3.3.2 to 3.3.5 with the following additions:

7.1.2.1 Water, Ammonium Hydroxide, and Phenolphthalein. Same as Sections 3.2.1, 3.2.5, and 3.2.6 of this method, respectively.

7.1.2.2 Filter. Glass fiber to fit Buchner funnel.

7.1.2.3 Hydrochloric Acid (HCl), 1 M. Add 8.3 ml of concentrated HCl (12 M) to 50 ml of water in a 100-ml volumetric flask. Dilute to 100 ml with water.

7.1.2.4 Glass Wool.

7.1.2.5 Ion Exchange Resin. Strong cation exchange resin, hydrogen form, analytical grade.

7.1.2.6 pH Paper. Range of 1 to 7.

7.1.3 Analysis.

7.1.3.1 Ion Exchange Column Preparation. Slurry the resin with 1 M HCl in a 250-ml beaker, and allow to stand overnight. Place 2.5 cm (1 in.) of glass wool in the bottom of the glass column. Rinse the slurried resin twice with water. Resuspend the resin in water, and pour sufficent resin into the column to make a bed 5.1 cm (2 in.) deep. Do not allow air bubbles to become entrapped in the resin or glass wool to avoid channeling, which may produce erratic results. If necessary, stir the resin with a glass rod to remove air bubbles. after the column has been prepared, never let the liquid level fall below the top of the upper glass wool plug. Place a 2.5-cm (1-in.) plug of glass wool on top of the resin. Rinse the column with water until the eluate gives a pH of 5 or greater as measured with pH paper.

7.1.3.2 Sample Extraction. Follow the procedure given in Section 4.3.1 except do not dilute the sample to 500 ml.

7.1.3.3 Sample Residue. Place at least one clean glass fiber filter for each sample in a Buchner funnel, and rinse the filters with water. Remove the filters from the funnel, and dry them in an oven at 105 ± 5 °C; then cool in a desiccator. Weigh each filter to constant weight according to the procedure in Method 5, Section 4.3. Record the weight of each filter to the nearest 0.1 mg.

Assemble the vacuum filter apparatus, and place one of the clean, tared glass fiber filters in the Buchner funnel. Decant the liquid portion of the extracted sample (Section 7.1.3.2) through the tared glass fiber filter into a clean, dry, 500-ml filter flask. Rinse all the particulate matter remaining in the volumetric flask onto the glass fiber filter with water. Rinse the particulate matter with additional water. Transfer the filtrate to a 500-ml volumetric flask, and dilute to 500 ml with water. Dry the filter overnight at 105 ± 5 °C, cool in a desiccator, and weigh to the nearest 0.1 mg.

Dry a 250-ml beaker at 75 ± 5 °C, and cool in a desiccator; then weigh to constant weight to the nearest 0.1 mg. Pipette 200 ml of the filtrate that was saved into a tared 250-ml beaker; add five drops of phenolphtahalein indicator and sufficient concentrated ammonium hydroxide to turn the solution pink. Carefully evaporate the contents of the beaker to dryness at 75 ± 5 °C. Check for dryness every 30 minutes. Do not continue to bake the sample once it has dried. Cool the sample in a desiccator, and weigh to constant weight to the nearest 0.1 mg.

7.1.3.4 Sulfate Analysis. Adjust the flow rate through the ion exchange column to 3 ml/min. Pipette a 20-ml aliquot of the filtrate onto the top of the ion exchange column, and collect the eluate in a 50-ml volumetric flask. Rinse the column with two 15-ml portions of water. Stop collection of the eluate when the volume in the flask reaches

50-ml. Pipette a 20-ml aliquot of the eluate into a 250-ml Erlenmeyer flask, add 80 ml of 100 percent isopropanol and two to four drops of thorin indicator, and titrate to a pink end point using 0.0100 N barium perchlorate. Repeat and average the titration volumes. Run a blank with each series of samples. Replicate titrations must agree within 1 percent or 0.2 ml, whichever is larger. Perform the ion exchange and titration procedures on duplicate portions of the filtrate. Results should agree within 5 percent. Regenerate or replace the ion exchange resin after 20 sample aliquotes have been analyzed or if the end point of the titration becomes unclear.

NOTE: Protect the 0.0100 N barium perchlorate solution from evaporation at all times.

7.1.3.5 Blank Determination. Begin with a sample of water of the same volume as the samples being processed and carry it through the analysis steps described in Sections 7.1.3.3 and 7.1.3.4. A blank value larger than 5 mg should not be subtracted from the final particulate matter mass. Causes for large blank values should be investigated and any problems resolved before proceeding with further analyses.

7.1.4 Calibration. Calibrate the barium perchlorate solutions as in Method 6, Section 5.5.

7.1.5 Calculations.

7.1.5.1 Nomenclature. Same as Section 6.1 with the following additions:

m_a = Mass of clean analytical filter, mg.
m_d = Mass of dissolved particulate matter, mg.
m_e = Mass of beaker and dissolved particulate matter after evaporation of filtrate, mg.
m_p = Mass of insoluble particulate matter, mg.
m_r = Mass of analytical filter, sample filter, and insoluble particulate matter, mg.
m_{bk} = Mass of nonsulfate particulate matter in blank sample, mg.
N = Normality of $Ba(Cl0_4)_2$ titrant, meq/ml.
V_a = Volume of aliquot taken for titration, 20 ml.
V_c = Volume of titrant used for titration blank, ml.
V_d = Volume of filtrate evaporated, 200 ml.
V_e = Volume of eluate collected, 50 ml.
V_f = Volume of extracted sample, 500 ml.
V_i = Volume of filtrate added to ion exchange column, 20 ml.
V_t = Volume of $Ba(Cl0_4)_2$ titrant, ml.
W = Equivalent weight of ammonium sulfate, 66.07 mg/meq.

7.1.5.2 Mass of Insoluble Particulate Matter.

$$m_p = m_r - m_a - m_f \qquad \text{Eq. 5F-4}$$

7.1.5.3 Mass of Dissolved Particulate Matter.

$$m_d = (m_e - (V_f/V_d)\ m_b) \qquad \text{Eq. 5F–5}$$

7.1.5.4 Mass of Ammonium Sulfate.

$$m_s = \frac{(V_t - V_c)\ N\ W\ V_e\ V_f}{V_a\ V_i} \qquad \text{Eq. 5F-6}$$

7.1.5.5 Mass of Nonsulfate Particulate Matter.

$$m_n = m_p \pm m_d - m_s - m_{bk} \qquad \text{Eq. 5F-7}$$

8. *Bibliography.*

1. Mulik, J.D. and E. Sawicki. Ion Chromatographic Analysis of Environmental Pollutants. Ann Arbor, Ann Arbor Science Publishers, Inc. Vol. 2. 1979.

2. Sawicki, E., J.D. Mulik, and E. Wittgenstein. Ion Chromatographic Analysis of Environmental Pollutants. Ann Arbor, Ann Arbor Science Publishers, Inc. Vol. 1. 1978.

3. Siemer, D.D. Separation of Chloride and Bromide From Complex Matrices Prior to Ion Chromatographic Determination. Analytical Chemistry. *52*(12):1874–1877. October 1980.

4. Small, H., T.S. Stevens, and W.C. Bauman. Novel Ion Exchange Chromatographic Method Using Conductimetric Determination. Analytical Chemistry. *47*(11):1801. 1975.

METHOD 5G—DETERMINATION OF PARTICULATE EMISSIONS FROM WOOD HEATERS FROM A DILUTION TUNNEL SAMPLING LOCATION

1. Applicability and Principle

1.1 Applicability. This method is applicable for the determination of particulate matter emissions from wood heaters.

1.2 Principle. Particulate matter is withdrawn proportionally at a single point from a total collection hood and sampling tunnel that combines the wood heater exhaust with ambient dilution air. The particulate matter is collected on two glass fiber filters in series. The filters are maintained at a temperature of no greater than 32 °C (90 °F). The particulate mass is determined gravimetrically after removal of uncombined water.

There are three sampling train approaches described in this method: (1) One dual-filter dry sampling train operated at about 0.015 m^3/min, (2) One dual-filter plus impingers sampling train operated at about 0.015 m^3/min, and (3) two dual-filter dry sampling trains operated simultaneously at any flow rate. Options (2) and (3) are referenced in Section 7 of this method. The dual-filter sampling train equipment and operation, option (1), are described in detail in this method.

2. Apparatus

2.1 Sampling Train. The sampling train configuration is shown in Figure 5G–1 and consists of the following components:

2.1.1 Probe. Stainless steel (e.g., 316 or grade more corrosion resistant) or glass about 95 mm (⅜ in.) I.D., 0.6 m (24 in.) in length. If made of stainless steel, the probe shall be constructed from seamless tubing.

2.1.2 Pitot Tube. Type S, as described in Section 2.1 of Method 2. The Type S pitot tube assembly shall have a known coefficient, determined as outlined in Method 2, Section 4.

Alternatively, a standard pitot may be used as described in Method 2, Section 2.1.

2.1.3 Differential Pressure Gauge. Inclined manometer or equivalent device, as described in Method 2, Section 2.2. One manometer shall be used for velocity head (Δ p) readings and another (optional) for orifice differential pressure readings (Δ H).

2.1.4 Filter Holders. Two each made of borosilicate glass, stainless steel, or Teflon, with a glass frit or stainless steel filter support and a silicone rubber, Teflon, or Viton gasket. The holder design shall provide a positive seal against leakage from the outside or around the filters. The filter holders shall be placed in series with the backup filter holder located 25 to 100 mm (1 to 4 in.) downstream from the primary filter holder. The filter holder shall be capable of holding a filter with a 100 mm (4 in.) diameter, except as noted in Section 7.

NOTE: Mention of trade names or specific product does not constitute endorsement by the Environmental Protection Agency.

2.1.5 Filter Temperature Monitoring System. A temperature gauge capable of measuring temperature to within 1.5 percent of absolute temperature. The gauge shall be installed at the exit side of the front filter holder so that the sensing tip of the temperature gauge is in direct contact with the sample gas or in a thermowell as shown in Figure 5G–1. The temperature gauge shall comply with the calibration specifications in Method 2, Section 4. Alternatively, the sensing tip of the temperature gauge may be installed at the inlet side of the front filter holder.

2.1.6 Dryer. Any system capable of removing water from the sample gas to less than 1.5 percent moisture (volume percent) prior to the metering system. System includes monitor for demonstrating that sample gas temperature is less than 20 °C (68 °F).

2.1.7 Metering System. Same as Method 5, Section 2.1.8.

2.1.8 Barometer. Mercury, aneroid, or other barometer capable of measuring atmospheric pressure to within 2.5 mm Hg (0.1 in. Hg).

2.1.9 Dilution Tunnel Gas Temperature Measurement. A temperature gauge capable of measuring temperature to within 1.5 percent of absolute temperature.

2.2 Dilution Tunnel. The dilution tunnel apparatus is shown in Figure 5G–2 and consists of the following components:

2.2.1 Hood. Constructed of steel with a minimum diameter of 0.3 m (1 ft) on the large end and a standard 0.15 to 0.3 m (0.5 to 1 ft) coupling capable of connecting to standard 0.15 to 0.3 m (0.5 to 1 ft) stove pipe on the small end.

2.2.2 90° Elbows. Steel 90° elbows, 0.15 to 0.3 m (0.5 to 1 ft) in diameter for connecting mixing duct, straight duct and damper (optional) assembly. There shall be at least two 90° elbows upstream of the sampling section (see Figure 5G–2).

2.2.3 Straight Duct. Steel, 0.15 to 0.3 m (0.5 to 1 ft) in diameter to provide the ducting for the dilution apparatus upstream of the sampling section. Steel duct, 0.15 m (0.5 ft) in diameter shall be used for the sampling section. In the sampling section, at least 1.2 m (4 ft) downstream of the elbow, shall be two holes (velocity traverse ports) at 90° to each other of sufficient size to allow entry of the pitot for traverse measurements. At least 1.2 m (4 ft) downstream of the velocity traverse ports, shall be one hole (sampling port) of sufficient size to allow entry of the sampling probe. Ducts of larger diameter may be used for the sampling section, provided the specifications for minimum gas velocity and the dilution rate range shown in Section 4 are maintained. The length of duct from the hood inlet to the sampling ports shall not exceed 9.1 m (30 ft).

2.2.4 Mixing Baffles. Steel semicircles (two) attached at 90° to the duct axis on opposite sides of the duct midway between the two elbows upstream of sampling section. The space between the baffles shall be about 0.3 m (12 in.).

2.2.5 Blower. Squirrel cage or other fan capable of extracting gas from the dilution tunnel of sufficient flow to maintain the velocity and dilution rate specifications in Section 4 and exhausting the gas to the atmosphere.

2.3 Sample Recovery. Probe brushes, wash bottles, sample storage containers, petri dishes, and a funnel as described in Method 5, Section 2.2.1 through 2.2.4, and 2.2.8, respectively, are needed.

2.4 Analysis. Glass weighing dishes, desiccator, analytical balance, beakers (250 ml or smaller), hygrometer, and temperature gauge as described in Method 5, Sections 2.3.1 through 2.3.3 and 2.3.5 through 2.3.7, respectively, are needed.

3. Reagents

3.1 Sampling. The reagents used in sampling are as follows:

3.1.1 Filters. Glass fiber filters with a minimum diameter of 100 mm (4 in.), without organic binder, exhibiting at least 99.95 percent efficiency (<0.05 percent penetration) on 0.3-micron dioctyl phthalate smoke particles. Gelman A/E 61631 has been found acceptable for this purpose.

3.1.2 Stopcock Grease. Same as Method 5, Section 3.1.5.

3.2 Sample Recovery. Acetone-reagent grade, same as Method 5, Section 3.2.

3.3 Analysis. Two reagents are required for the analysis:

3.3.1 Acetone. As in Section 3.2.

3.3.2 Desiccant. Anhydrous calcium sulfate, calcium chloride, or silica gel, indicating type.

4. Procedure

4.1 Dilution Tunnel. A schematic of a dilution tunnel is shown in Figure 5G–2. The dilution tunnel dimensions and other features are described in Section 2.2. Assemble the dilution tunnel sealing joints and seams to prevent air leakage. Clean the dilution tunnel with an appropriately sized, wire chimney brush before each certification test.

4.1.1 Draft Determination. Prepare the wood heater as in Method 28, Section 6.2.1. Locate the dilution tunnel hood centrally over the wood heater stack exhaust. Operate the dilution tunnel blower at the flow rate to be used during the test run. Measure the draft imposed on the wood heater by the dilution tunnel (i.e., the difference in draft measured with and without the dilution tunnel operating) as described in Method 28, Section 6.2.3. Adjust the distance between the top of the wood heater stack exhaust and the dilution tunnel hood so that the dilution tunnel induced draft is less than 1.25 Pa (0.005 in. H_2O). Have no fire in the wood heater, close the wood heater doors, and open fully the air supply controls during this check and adjustment.

4.1.2 Smoke Capture. During the pretest ignition period described in Method 28, Section 6.3, operate the dilution tunnel and visually monitor the wood heater stack exhaust. Operate the wood heater with the doors closed and determine that 100 percent of the exhaust gas is collected by the dilution tunnel hood. If less than 100 percent of the wood heater exhaust gas is collected, adjust the distance between the wood heater stack and the dilution tunnel hood until no visible exhaust gas is escaping. Stop the pretest ignition period, and repeat the draft determination procedure described in Section 4.1.1.

4.2 Velocity Measurements. During the pretest ignition period described in Method 28, Section 6.3, conduct a velocity traverse to identify the point of average velocity. This single point shall be used for measuring velocity during the test run.

4.2.1 Velocity Traverse. Measure the diameter of the duct at the velocity traverse port location through both ports. Calculate the duct area using the average of the two diameters. A pretest leak-check of pitot lines as in Method 2, Section 3.1, is recommended. Place the calibrated pitot tube at the centroid of the stack in either of the velocity traverse ports. Adjust the damper or similar device on the blower inlet until the velocity indicated by the pitot is approximately 220 m/min (715 fpm). Continue to read the Δ p and temperature until the velocity has remained constant (less than 5 percent change) for 1 minute. Once a constant velocity is obtained at the centroid of the duct, perform a velocity traverse as outlined in Method 2, Section 3.3 using four points per traverse as outlined in Method 1. Measure the Δ p and tunnel temperature at each traverse point and record the readings. Calculate the total gas flow rate using calculations contained in Method 2, Section 5. Verify that the flow rate is 4 $\pm$0.45 sm^3/min (140$\pm$14 scfm); if not, readjust the damper, and repeat the velocity traverse. The moisture may be assumed to be 4 percent (100 percent relative humidity at 85 °F). Direct moisture measurements such as outlined in EPA Method 4 are also permissible.

NOTE: If burn rates exceed 3 kg/hr (6.6 lb/hr), dilution tunnel duct flow rates greater than 4 sm^3/min (140 scfm) and sampling section duct diameters larger than 150 mm (6 in.) are allowed. If larger ducts or flow rates are used, the sampling section velocity shall be at least 220 m/min (715 fpm). In order to ensure measurable particulate mass catch, it is recommended that the ratio of the average mass flow rate in the dilution tunnel to the average fuel burn rate be less than 150:1 if larger duct sizes or flow rates are used.

4.2.2 Testing Velocity Measurements. After obtaining velocity traverse results that meet the flow rate requirements, choose a point of average velocity and place the pitot and thermocouple at that location in the duct. Alternatively, locate the pitot and thermocouple at the duct centroid and calculate a velocity correction factor for the centroidal position. Mount the pitot to ensure no movement during the test run and seal the port holes to prevent any air leakage. Align the pitot to be parallel with the duct axis, at the measurement point. Check that this condition is maintained during the test run (about 30-minute intervals). Monitor the temperature and velocity during the pretest ignition period to ensure the proper flow rate is maintained. Make adjustments to the dilution tunnel flow rate as necessary.

4.3 Sampling.

4.3.1 Pretest Preparation. It is suggested that sampling equipment be maintained and calibrated according to the procedure described in APTD–0576.

Check and desiccate filters as described in Method 5, Section 4.1.1.

4.3.2 Preparation of Collection Train. During preparation and assembly of the sampling train, keep all openings where contamination can occur covered until just prior to assembly or until sampling is about to begin.

Using a tweezer or clean disposable surgical gloves, place one labeled (identified) and weighed filter in each of the filter holders. Be sure that each of the filters is properly centered and the gasket properly placed so as to prevent the sample gas stream from circumventing the filter. Check each of the filters for tears after assembly is completed.

Mark the probe with heat resistant tape or by some other method to denote the proper distance into the stack or duct.

Set up the train as in Figure 5G–1.

4.3.3 Leak-Check Procedures.

4.3.3.1 Pretest Leak-Check. A pretest leak-check is recommended, but not required. If the tester opts to conduct the pretest leak-check, conduct the leak-check as described in Method 5, Section 4.1.4.1. A vacuum 130 mm Hg (5 in. Hg) may be used instead of 380 mm Hg (15 in. Hg).

4.3.3.2 Post-Test Leak-Check. A leak-check is mandatory at the conclusion of each test run. The leak-check shall be done in accordance with the procedures described in Method 5, Section 4.1.4.1. A vacuum of 130 mm Hg (5 in. Hg) or the greatest vacuum measured during the test run, whichever is greater, may be used instead of 380 mm Hg (15 in. Hg).

4.3.4 Preliminary Determinations. Determine the pressure, temperature and the average velocity of the tunnel gases as in Section 4.2. Moisture content of diluted tunnel gases is assumed to be 4 percent for making flow rate calculations; the moisture content may be measured directly as in Method 4.

4.3.5 Sampling Train Operation. Position the probe inlet at the stack centroid, and block off the openings around the probe and porthole to prevent unrepresentative dilution of the gas stream. Be careful not to bump the probe into the stack wall when removing or inserting the probe through the porthole; this minimizes the chance of extracting deposited material.

Begin sampling at the start of the test run as defined in Method 28, Section 6.4.1. During the test run, maintain a sample flow rate proportional to the dilution tunnel flow rate (within 10 percent of the initial proportionality ratio) and a filter holder temperature of no greater than 32 °C (90 °F). The initial sample flow rate shall be approximately 0.015 m^3/min (0.5 cfm).

For each test run, record the data required on a data sheet such as the one shown in Figure 5G–3. Be sure to record the initial dry gas meter reading. Record the dry gas meter readings at the beginning and end of each sampling time increment and when sampling is halted. Take other readings as indicated on Figure 5G–3 at least once each 10 minutes during the test run. Since the manometer level and zero may drift because of vibrations and temperature changes, make periodic checks during the test run.

For the purposes of proportional sampling rate determinations, data from calibrated flow rate devices, such as glass rotameters, may be used in lieu of incremental dry gas meter readings. Proportional rate calculation procedures must be revised, but acceptability limits remain the same.

During the test run, make periodic adjustments to keep the temperature between (or upstream of) the filters at the proper level. Do not change sampling trains during the test run.

At the end of the test run (see Method 28, Section 6.4.6), turn off the coarse adjust valve, remove the probe from the stack, turn off the pump, record the final dry gas meter reading, and conduct a post-test leak-check, as outlined in Section 4.3.3. Also, leak-check the pitot lines as described in Method 2, Section 3.1; the lines must pass this leak-check in order to validate the velocity head data.

4.3.6 Calculation of Proportional Sampling Rate. Calculate percent proportionality (see Calculations, Section 6) to determine whether the run was valid or another test run should be made.

4.4 Sample Recovery. Begin recovery of the probe and filter samples as described in Method 5, Section 4.2, except that an acetone blank volume of about 50 ml or more may be used.

Treat the samples as follows:

Container No. 1. Carefully remove the filter from the primary filter holder and place it in its identified (labeled) petri dish container. Use a pair of tweezers and/or clean disposable surgical gloves to handle the filter. If it is necessary to fold the filter, do so such that the particulate cake is inside the fold. Carefully transfer to the petri dish any particulate matter and/or filter fibers which adhere to the filter holder gasket, by using a dry Nylon bristle brush and/or a sharp-edged blade. Seal the container.

Container No. 2. Remove the filter from the second filter holder using the same procedures as described above.

NOTE: The two filters may be placed in the same container for desiccation and weighing. Use the sum of the filter tare weights to determine the sample mass collected.

Container No. 3. Taking care to see that dust on the outside of the probe or other exterior surfaces does not get into the sample, quantitatively recover particulate matter or any condensate from the probe and filter holders by washing and brushing these components with acetone and placing the wash in a labeled (No. 3) glass container. At least three cycles of brushing and rinsing are necessary.

Between sampling runs, keep brushes clean and protected from contamination.

After all acetone washings and particulate matter have been collected in the sample containers, tighten the lids on the sample containers so that the acetone will not leak

out when transferred to the laboratory weighing area. Mark the height of the fluid levels to determine whether leakage occurs during transport. Label the containers clearly to identify contents. Requirements for capping and transport of sample containers are not applicable if sample recovery and analysis occur in the same room.

4.5 Analysis. Record the data required on a sheet such as the one shown in Figure 5G–4. Use the same analytical balance for determining tare weight and final sample weights. Handle each sample container as follows:

Containers No. 1 and 2. Leave the contents in the sample containers or transfer the filters and loose particulate to tared glass weighing dishes. Desiccate for no more than 36 hours before the initial weighing, weigh to a constant weight, and report the results to the nearest 0.1 mg. For purposes of this section, the term ''constant weight'' means a difference of no more than 0.5 mg or 1 percent of total sample weight (less tare weight), whichever is greater, between two consecutive weighings, with no less than 2 hours between weighings.

Container No. 3. Note the level of liquid in the container, and confirm on the analysis sheet whether leakage occurred during transport. If a noticeable amount of leakage has occurred, either void the sample or use methods, subject to the approval of the Administrator, to correct the final results. Determination of sample leakage is not applicable if sample recovery and analysis occur in the same room. Measure the liquid in this container either volumetrically to within 1 ml or gravimetrically to within 0.5 g. Transfer the contents to a tared 250 ml or smaller beaker and evaporate to dryness at ambient temperature and pressure. Desiccate and weigh to a constant weight. Report the results to the nearest 0.1 mg.

''Acetone Blank'' Container. Measure acetone in this container either volumetrically or gravimetrically. Transfer the acetone to a tared 250 ml or smaller beaker and evaporate to dryness at ambient temperature and pressure. Desiccate and weigh to a constant weight. Report the results to the nearest 0.1 mg.

5. Calibration

Maintain a laboratory record of all calibrations.

5.1 Pitot Tube. The Type S pitot tube assembly shall be calibrated according to the procedure outlined in Method 2, Section 4, prior to the first certification test and checked semiannually, thereafter. A standard pitot need not be calibrated but shall be inspected and cleaned, if necessary, prior to each certification test.

5.2 Volume Metering System.

5.2.1 Initial and Periodic Calibration. Before its initial use and at least semiannually thereafter, calibrate the volume metering system as described in Method 5, Section 5.3.1, except that the wet test meter with a capacity of 3.0 liters/rev (0.1 ft^3/rev) may be used. Other liquid displacement systems accurate to within 1 percent, may be used as calibration standards.

Procedures and equipment specified in Method 5, Section 7, for alternative calibration standards, including calibrated dry gas meters and critical orifices, are allowed for calibrating the dry gas meter in the sampling train. A dry gas meter used as a calibration standard shall be recalibrated at least once annually.

5.2.2 Calibration After Use. After each certification or audit test (four or more test runs conducted on a wood heater at the four burn rates specified in Method 28), check calibration of the metering system by performing three calibration runs at a single, intermediate flow rate as described in Method 5, Section 5.3.2.

Procedures and equipment specified in Method 5, Section 7, for alternative calibration standards are allowed for the post-test dry gas meter calibration check.

5.2.3 Acceptable Variation in Calibration. If the dry gas meter coefficient values obtained before and after a certification test differ by more than 5 percent, the certification test shall either be voided and repeated, or calculations for the certification test shall be performed using whichever meter coefficient value (i.e., before or after) gives the lower value of total sample volume.

5.3 Temperature Gauges. Use the procedure in Method 2, Section 4.3, to calibrate temperature gauges before the first certification or audit test and at least semiannually, thereafter.

5.4 Leak-Check of Metering System Shown in Figure 5G–1. That portion of the sampling train from the pump to the orifice meter shall be leak-checked prior to initial use and after each certification or audit test. Leakage after the pump will result in less volume being recorded than is actually sampled. Use the procedure described in Method 5, Section 5.6.

Similar leak-checks shall be conducted for other types of metering systems (i.e., without orifice meters).

5.5 Barometer. Calibrate against a mercury barometer before the first certification test and at least semiannually, thereafter. If a mercury barometer is used, no calibration is necessary. Follow the manufacturer's instructions for operation.

5.6 Analytical Balance. Perform a multipoint calibration (at least five points spanning the operational range) of the analytical balance before the first certification test and semiannually, thereafter. Before each certification test, audit the balance by weighing at least one calibration weight (class F) that corresponds to 50 to 150 percent

of the weight of one filter. If the scale cannot reproduce the value of the calibration weight to within 0.1 mg, conduct the multipoint calibration before use.

6. Calculations

Carry out calculations, retaining at least one extra decimal figure beyond that of the acquired data. Round off figures after the final calculation. Other forms of the equations may be used as long as they give equivalent results.

6.1 Nomenclature.

B_{ws}=Water vapor in the gas stream, proportion by volume (assumed to be 0.04).

c_s=Concentration of particulate matter in stack gas, dry basis, corrected to standard conditions, g/dsm³ (g/dscf).

E=Particulate emission rate, g/hr.

L_a=Maximum acceptable leakage rate for either a pretest or post-test leak-check, equal to 0.00057 m³/min (0.02 cfm) or 4 percent of the average sampling rate, whichever is less.

L_p= Leakage rate observed during the post-test leak-check, m³/min (cfm).

m_a=Mass of residue of acetone blank after evaporation, mg.

m_{aw}=Mass of residue from acetone wash after evaporation, mg.

m_n=Total amount of particulate matter collected, mg.

M_w=Molecular weight of water, 18.0 g/g-mole (18.0 lb/lb-mole).

P_{bar}=Barometric pressure at the sampling site, mm Hg (in. Hg).

PR=Percent of proportional sampling rate.

P_s=Absolute gas pressure in dilution tunnel, mm Hg (in. Hg).

P_{std}=Standard absolute pressure, 760 mm Hg (29.92 in. Hg).

Q_{sd}=Average gas flow rate in dilution tunnel, calculated as in Method 2, Equation 2–10, dsm³/hr (dscf/hr).

T_m=Absolute average dry gas meter temperature (see Figure 5G–3), ° K (° R).

T_{mi}=Absolute average dry gas meter temperature during each 10-minute interval, i, of the test run, ° K (° R).

T_s=Absolute average gas temperature in the dilution tunnel (see Figure 5G 3), ° K (° R).

T_{si}=Absolute average gas temperature in the dilution tunnel during each 10 minute interval, i, of the test run, ° K (° R).

T_{std}=Standard absolute temperature, 293 ° K (528 ° R).

V_a=Volume of acetone blank, ml.

V_{aw}=Volume of acetone used in wash, ml.

V_m=Volume of gas sample as measured by dry gas meter, dm³ (dcf).

V_{mi}=Volume of gas sample as measured by dry gas meter during each 10-minute interval, i, of the test run, dm³ (dcf).

$V_{m(std)}$=Volume of gas sample measured by the dry gas meter, corrected to standard conditions, dsm³ (dscf).

V_s=Average gas velocity in dilution tunnel, calculated by Method 2, Equation 2–9, m/sec (ft/sec). The dilution tunnel dry gas molecular weight may be assumed to be 29 g/g mole (lb/lb mole).

V_{si}=Average gas velocity in dilution tunnel during each 10-minute interval, i, of the test run, calculated by Method 2, Equation 2–9, m/sec (ft/sec).

Y=Dry gas meter calibration factor.

ΔH=Average pressure differential across the orifice meter, if used (see Figure 5G–2), mm H_2O (in. H_2O).

Θ=Total sampling time, min.

10=10 minutes, length of first sampling period.

13.6=Specific gravity of mercury.

100=Conversion to percent.

6.2 Dry Gas Volume. Correct the sample volume measured by the dry gas meter to standard conditions (20 °C, 760 mm Hg or 68 °F, 29.92 in. Hg) by using Equation 5G–1. (If no orifice meter is used in sampling train, assume ΔH=O or measure static pressure at dry gas meter outlet.)

$$V_{m(std)} = V_m Y\left(\frac{T_{std}}{T_m}\right)\left(\frac{P_{bar} + (\Delta H / 13.6)}{P_{std}}\right) = K_1 V_m Y\left(\frac{P_{bar} + (\Delta H / 13.6)}{T_m}\right) \quad Eq.\ 5G\text{-}1$$

where;

K_1=0.3858 ° K/mm Hg for metric units.

=17.64 ° R/in. Hg for English units.

NOTE: If L_p exceeds L_a, Equation 5G–1 must be modified as follows: Replace V_m in Equation 5G–1 with the expression:

$[V_m - (L_p - L_a)\Theta]$

6.3 Solvent Wash Blank.

$$m_{aw} = \left(\frac{m_a V_{aw}}{V_a}\right) \qquad \text{Eq. 5G-2}$$

6.4 Total Particulate Weight. Determine the total particulate catch, m_n, from the sum of the weights obtained from Containers 1, 2, and 3, less the acetone blank (see Figure 5G–4).

6.5 Particulate Concentration.

$c_s = (0.001\ g/mg)\ (m_n/V_{m(std)})$

Eq. 5G–3

6.6 Particulate Emission Rate.

$E = c_s\ Q_{sd}$

Eq. 5G–4

NOTE: Particulate emission rate results produced using the sampling train described in Section 2 and shown in Figure 5G–1 shall be adjusted for reporting purposes by the following methods adjustment factor:

$E_{adj} = 1.82\ (E)^{0.83}$

Eq. 5G–5

6.7 Proportional Rate Variation. Calculate PR for each 10-minute interval, i, of the test run.

$$PR = \left(\frac{\theta\left(V_{mi} v_s T_m T_{si}\right)}{10\left(V_m v_{si} T_s T_{mi}\right)} \right) \times 100 \qquad \text{Eq. 5G-6}$$

Alternate calculation procedures for proportional rate variation may be used if other sample flow rate data (e.g., orifice flow meters or rotameters) are monitored to maintain proportional sampling rates. The proportional rate variations shall be calculated for each 10-minute interval by comparing the stack to nozzle velocity ratio for each 10-minute interval to the average stack to nozzle velocity ratio for the test run. Proportional rate variation may be calculated for intervals shorter than 10 minutes with appropriate revisions to Equation 5G–6.

6.8 Acceptable Results. If no more than 10 percent of the PR values for all the intervals exceed 90 percent ≤PR ≤110 percent, and if no PR value for any interval exceeds 80 percent ≤PR ≤120 percent, the results are acceptable. If the PR values for the test run are judged to be unacceptable, report the test run emission results, but do not include the results in calculating the weighted average emission rate, and repeat the test run.

7. Alternative Sampling and Analysis Procedure

7.1 Method 5H Sampling Train. The sampling and analysis train and procedures described in Method 5H, Sections 2.1, 3.1, 3.2, 5.1, 5.2.3, 5.3, and 5.6 may be used in lieu of similar sections in Method 5G. Operation of the Method 5H sampling train in the dilution tunnel is as described in Section 4.3.5 of this method. Filter temperatures and condenser conditions are as described in Method 5H. No methods adjustment factor as described in Equation 5G–5, Section 6.6, is to be applied to the particulate emission rate data produced by this alternative method.

7.2 Dual Sampling Trains. The tester may operate two sampling trains simultaneously at sample flow rates other than that specified in Section 4.3.5 provided the following specifications are met.

7.2.1 Sampling Train. The sampling train configuration shall be the same as specified in Section 2.1, except the probe, filter, and filter holder need not be the same sizes as specified in the applicable sections. Filter holders of plastic materials such as Nalgene or polycarbonate materials may be used (the Gelman 1119 filter holder has been found suitable for this purpose). With such materials, it is recommended not to use solvents in sample recovery. The filter face velocity shall not exceed 150 mm/sec (30 ft/min) during the test run. The dry gas meter shall be calibrated for the same flow rate range as encountered during the test runs. Two separate, complete sampling trains are required for each test run.

7.2.2 Probe Location. Locate the two probes in the dilution tunnel at the same level (see Section 2.2.3). Two sample ports are necessary. Locate the probe inlets within the 50 mm (2 in.) diameter centroidal area of the dilution tunnel no closer than 25 mm (1 in.) apart.

7.2.3 Sampling Train Operation. Operate the sampling trains as specified in Section 4.3.5, maintaining proportional sampling rates and starting and stopping the two sampling trains simultaneously. The pitot values as described in Section 4.2.2 shall be used to adjust sampling rates in both sampling trains.

7.2.4 Recovery and Analysis of Sample. Recover and analyze the samples from the two sampling trains separately, as specified in Sections 4.4 and 4.5.

For this alternative procedure, the probe and filter holder assembly may be weighed without sample recovery (use no solvents) described above in order to determine the sample weight gains. For this approach, weigh the clean, dry probe and filter holder assembly upstream of the front filter (without filters) to the nearest 0.1 mg to establish the tare weights. The filter holder section between the front and second filter need not be weighed. At the end of the test run, carefully clean the outside of the probe, cap the ends, and identify the sample (label). Remove the filters from the filter holder assemblies as described for containers Nos. 1 and 2 above. Reassemble the filter holder assembly, cap the ends, identify the sample (label), and transfer all the samples to the laboratory weighing area for final weighing. Descriptions of capping and transport of samples are not applicable if sample recovery and analysis occur in the same room.

For this alternative procedure, filters may be weighed directly without a petri dish. If the probe and filter holder assemb1y are to be weighed to determine the sample weight, rinse the probe with acetone to remove moisture before desiccating prior to the test run. Following the test run, transport the probe and fi1ter ho1der to the dessicator, and

uncap the openings of the probe and the filter holder assembly. Desiccate no more than 36 hours and weigh to a constant weight. Report the results to the nearest 0.1 mg.

7.2.5 Calculations. Calculate an emission rate (Section 6.6) for the sample from each sampling train separately and determine the average emission rate for the two values. The two emission rates shall not differ by more than 7.5 percent from the average emission rate, or 7.5 percent of the weighted average emission rate limit in the applicable standard, whichever is greater. If this specification is not met, the results are unacceptable. Report the results, but do not include the results in calculating the weighted average emission rate. Repeat the test run until acceptable results are achieved, report the average emission rate for the acceptable test run, and use the average in calculating the weighted average emission rate.

8. Bibliography

1. Same as for Method 5, citations 1 through 11, with the addition of the following:

2. Oregon Department of Environmental Quality Standard Method for Measuring the Emissions and Efficiencies of Woodstoves, June 8, 1984. Pursuant to Oregon Administrative Rules Chapter 340, Division 21.

3. American Society for Testing Materials. Proposed Test Methods for Heating Performance and Emissions of Residential Woodfired Closed Combustion-Chamber Heating Appliances. E–6 Proposal P 180. August 1986.

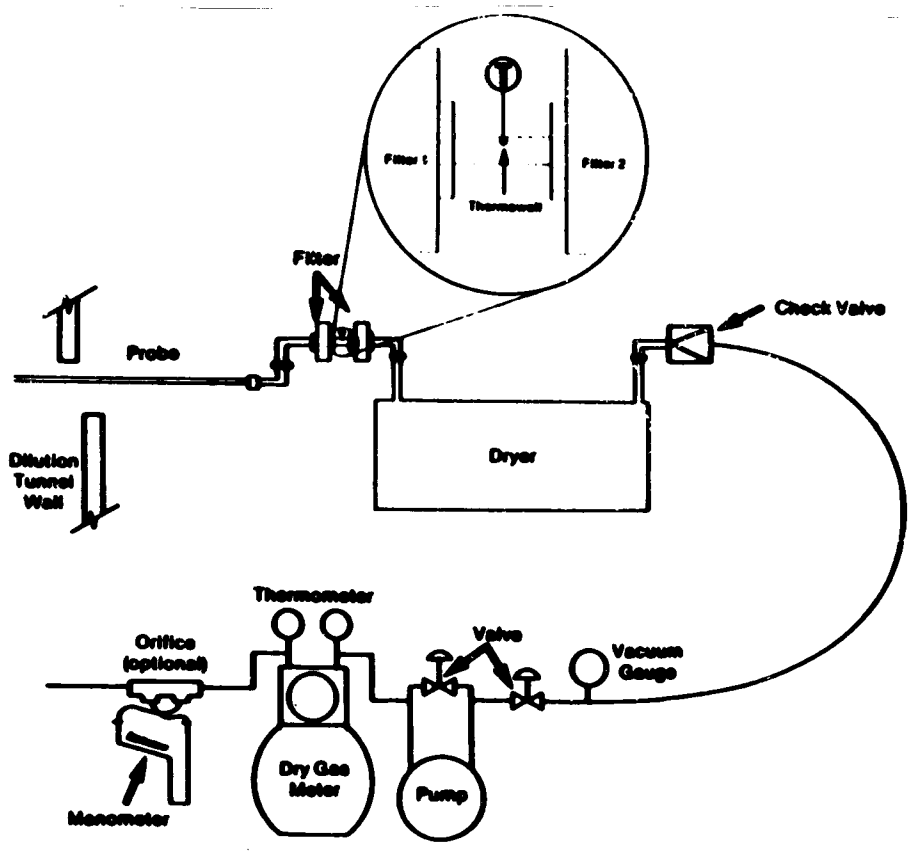

Figure 5G-1. Sampling train.

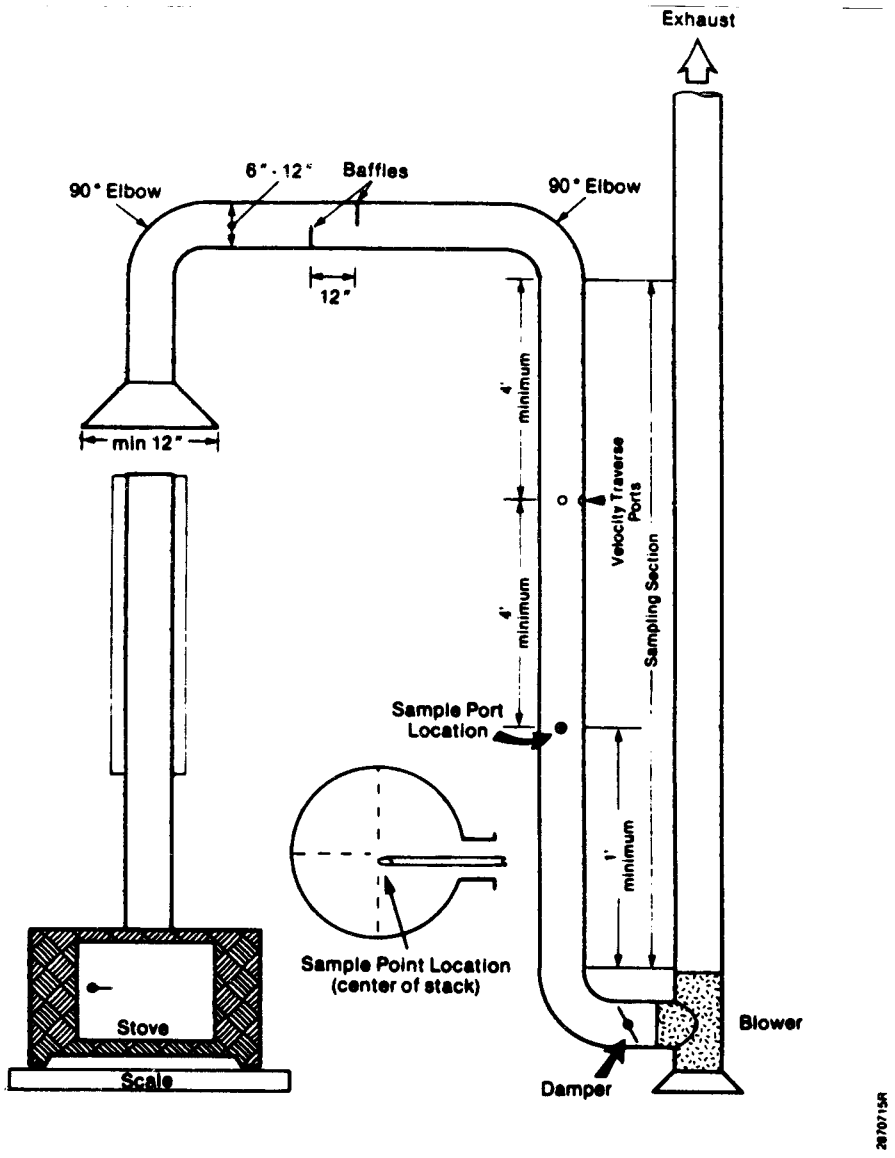

Figure 5G-2. Suggested construction details of the dilution tunnel.

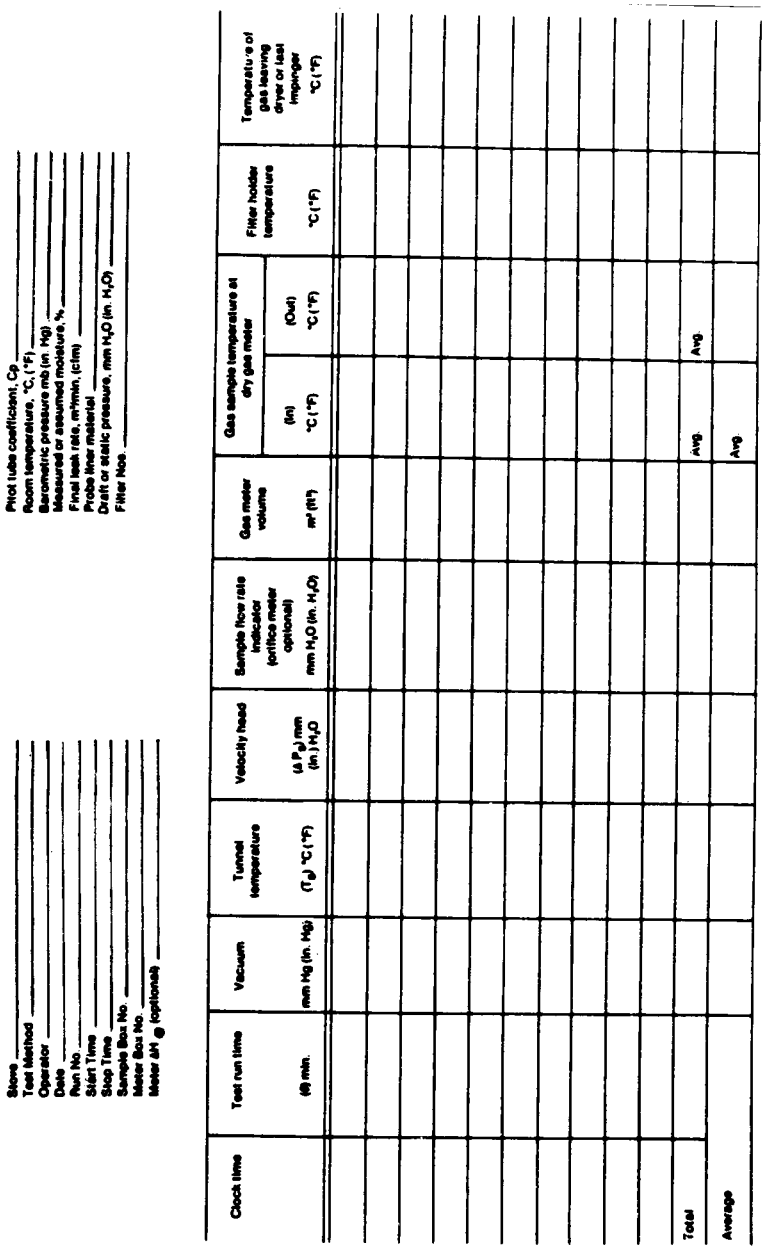

Figure 5G-3. Particulate field data sheet.

Stove
Date
Run No.
Filter Nos.
Liquid lost during transport, ml
Acetone blank volume, ml
Acetone wash volume, ml

Acetone blank concentration, mg/mg
Acetone wash blank, mg

Container No.	Weight of particulate collected, mg		
	Final weight	Tare weight	Weight gain
1.			
2.			
3.			
Total			
Less acetone blank			
Weight of particulate matter			

STACK MOISTURE MEASUREMENT DATA (OPTIONAL)

	Volume of liquid water collected	
	Impinger volume, ml	Silica gel weight, g
Final		
Initial		
Liquid collected		
Total volume collected		g[1] ml

[1] Convert weight of water to volume by dividing total weight increase by density of water (1 g/ml).

$$\frac{\text{Increase, g}}{(1\text{g/ml})} = \text{Volume water, ml}$$

Figure 5G–4. Analysis data sheet.

METHOD 5H—DETERMINATION OF PARTICULATE EMISSIONS FROM WOOD HEATERS FROM A STACK LOCATION

Applicability and Principle

1.1 Applicability. This method is applicable for the determination of particulate matter and condensible emissions from wood heaters.

1.2 Principle. Particulate matter is withdrawn proportionally from the wood heater exhaust and is collected on two glass fiber filters separated by impingers immersed in an ice bath. The first filter is maintained at a temperature of no greater than 120 °C (248 °F). The second filter and the impinger system are cooled such that the exiting temperature of the gas is no greater than 20 °C (68 °F). The particulate mass collected in the probe, on the filters, and in the impingers is determined gravimetrically after removal of uncombined water.

2. Apparatus

2.1 Sampling Train. The sampling train configuration is shown in Figure 5H–1. APTD–0576 is suggested for operating and maintenance procedures. The train consists of the following components:

2.1.1 Probe Nozzle. (Optional) Same as Method 5, Section 2.1.1. A straight sampling probe without a nozzle is an acceptable alternative.

2.1.2 Probe Liner. Same as Method 5, Section 2.1.2, except that the maximum length of the sample probe shall be 0.6 m (2 ft) and probe heating is optional.

2.1.3 Differential Pressure Gauge. Same as Method 5, Section 2.1.4.

2.1.4 Filter Holders. Two each of borosilicate glass, with a glass frit or stainless steel filter support and a silicone rubber, Teflon, or Viton gasket. The holder design shall provide a positive seal against leakage from the outside or around the filter. The front filter holder shall be attached immediately at the outlet of the probe and prior to the first impinger. The second filter holder shall be attached on the outlet of the third impinger and prior to the inlet of the fourth (silica gel) impinger.

NOTE: Mention of trade names or specific product does not constitute endorsement by the Environmental Protection Agency.

2.1.5 Filter Heating System. Same as Method 5, Section 2.1.6.

2.1.6 Condenser. Same as Method 5, Section 2.1.7, used to collect condensible materials and determine the stack gas moisture content.

2.1.7 Metering System. Same as Method 5, Section 2.1.8.

2.1.8 Barometer. Mercury, aneroid, or other barometer capable of measuring atmospheric pressure to within 2.5 mm Hg (0.1 in. Hg).

2.2 Stack Flow Rate Measurement System. A schematic of an example test system is shown in Figure 5H–2. The flow rate measurement system consists of the following components:

2.2.1 Sample Probe. A glass or stainless steel sampling probe.

2.2.2 Gas Conditioning System. A high density filter to remove particulate matter and a condenser capable of lowering the dew point of the gas to less than 5 °C (40 °F). Desiccant, such as Drierite, may be used to dry the sample gas. Do not use silica gel.

2.2.3 Pump. An inert (i.e., Teflon or stainless steel heads) sampling pump capable of delivering more than the total amount of sample required in the manufacturer's instructions for the individual instruments. A means of controlling the analyzer flow rate and a device for determining proper sample flow rate (e.g., precision rotameter, pressure gauge downstream of all flow controls) shall be provided at the analyzer. The requirements for measuring and controlling the analyzer flow rate are not applicable if data are presented that demonstrate the analyzer is insensitive to flow variations over the range encountered during the test.

2.2.4 CO Analyzer. Any analyzer capable of providing a measure of CO in the range of

0 to 10 percent by volume at least once every 10 minutes.

2.2.5 CO_2 Analyzer. Any analyzer capable of providing a measure of CO_2 in the range of 0 to 25 percent by volume at least once every 10 minutes.

NOTE: Analyzers with ranges less than those specified above may be used provided actual concentrations do not exceed the range of the analyzer.

2.2.6 Manifold. A sampling tube capable of delivering the sample gas to two analyzers and handling an excess of the total amount used by the analyzers. The excess gas is exhausted through a separate port.

2.2.7 Recorders (optional). To provide a permanent record of the analyzer outputs.

2.3 Proportional Gas Flow Rate System. To monitor stack flow rate changes and provide a measurement that can be used to adjust and maintain particulate sampling flow rates proportional to the stack flow rate. A schematic of the proportional flow rate system is shown in Figure 5H–2 and consists of the following components:

2.3.1 Tracer Gas Injection System. To inject a known concentration of SO_2 into the flue. The tracer gas injection system consists of a cylinder of SO_2, a gas cylinder regulator, a stainless steel needle valve or flow controller, a nonreactive (stainless steel and glass) rotameter, and an injection loop to disperse the SO_2 evenly in the flue.

2.3.2 Sample Probe. A glass or stainless steel sampling probe.

2.3.3 Gas Conditioning System. A combustor as described in Method 16A, Sections 2.1.5 and 2.1.6, followed by a high density filter to remove particulate matter, and a condenser capable of lowering the dew point of the gas to less than 5 °C (40 °F). Desiccant, such as Drierite, may be used to dry the sample gas. Do not use silica gel.

2.3.4 Pump. As described in Section 2.2.3.

2.3.5 SO_2 Analyzer. Any analyzer capable of providing a measure of the SO_2 concentration in the range of 0 to 1,000 ppm by volume (or other range necessary to measure the SO_2 concentration) at least once every 10 minutes.

2.3.6 Recorder (optional). To provide a permanent record of the analyzer outputs.

NOTE: Other tracer gas systems, including helium gas systems, are allowed for determining instantaneous proportional sampling rates.

2.4 Sample Recovery. Probe liner and probe nozzle brushes, wash bottles, sample storage containers, petri dishes, graduated cylinder or balance, plastic storage containers, funnel and rubber policeman, as described in Method 5, Sections 2.2.1 through 2.2.8, respectively, are needed.

2.5 Analysis. Weighing dishes, desiccator, analytical balance, beakers (250 ml or less), hygrometer or psychrometer, and temperature gauge as described in Method 5, Sections 2.3.1 through 2.3.7, respectively, are needed. In addition, a separatory funnel, glass or Teflon, 500 ml or greater, is needed.

3. Reagents

3.1 Sampling. The reagents used in sampling are as follows:

3.1.1 Filters. Glass fiber filters, without organic binder, exhibiting at least 99.95 percent efficiency (<0.05 percent penetration) on 0.3-micron dioctyl phthalate smoke particles. Gelman A/E 61631 filters have been found acceptable for this purpose.

3.1.2 Silica Gel. Same as Method 5, Section 3.1.2.

3.1.3 Water. Deionized distilled to conform to ASTM Specification D1193–77, Type 3 (incorporated by reference—see §60.17). Run blanks prior to field use to eliminate a high blank on test samples.

3.1.4 Crushed Ice.

3.1.5 Stopcock Grease. Same as Method 5, Section 3.1.5.

3.2 Sample Recovery. Same as Method 5, Section 3.2.

3.3 Cylinder Gases. For the purposes of this procedure, span value is defined as the upper limit of the range specified for each analyzer as described in Section 2.2 or 2.3. If an analyzer with a range different from that specified in this method is used, the span value shall be equal to the upper limit of the range for the analyzer used (see NOTE in Section 2.2.5).

3.3.1 Calibration Gases. The calibration gases for the CO_2, CO and SO_2 analyzers shall be CO_2, CO, or SO_2, as appropriate, in N_2. CO_2 and CO calibration gases may be combined in a single cylinder.

There are two alternatives for checking the concentrations of the calibration gases. (a) The first is to use calibration gases that are documented traceable to National Bureau of Standards Reference Materials. Use *Tracebility Protocol for Establishing True Concentrations of Gases Used for Calibrations and Audits of Continuous Source Emission Monitors* (Protocol Number 1) that is available from the Environmental Monitoring and Support Laboratory, Quality Assurance Branch, Mail Drop 77, Environmental Protection Agency, Research Triangle Park, North Carolina 27711. Obtain a certification from the gas manufacturer that the protocol was followed. These calibration gases are not to be analyzed with the test methods. (b) The second alternative is to use calibration gases not prepared according to the protocol. If this alternative is chosen, within 6 months prior to the certification test, analyze each of the CO_2 and CO calibration gas mixtures in triplicate using Method 3, and within 1 month prior to the certification test, analyze SO_2 calibration gas mixtures using Method 6. For the low-level, mid-level, or high-level gas mixtures, each of the individual SO_2 analytical results must be within 10 percent (or

10 ppm, whichever is greater) of the triplicate set average; CO_2 and CO test results must be within 0.5 percent CO_2 and CO; otherwise, discard the entire set and repeat the triplicate analyses. If the average of the triplicate test method results is within 5 percent for SO_2 gas (or 0.5 percent CO_2 and CO for the CO_2 and CO gases) of the calibration gas manufacturer's tag values, use the tag value; otherwise, conduct at least three additional test method analyses until the results of six individual SO_2 runs (the three original plus three additional) agree within 10 percent (or 10 ppm, whichever is greater) of the average (CO_2 and CO test results must be within 0.5 percent). Then use this average for the cylinder value. Four calibration gas levels are required as specified below:

3.3.1.1 High-level Gas. A gas concentration that is equivalent to 80 to 90 percent of the span value.

3.3.1.2 Mid-level Gas. A gas concentration that is equivalent to 45 to 55 percent of the span value.

3.3.1.3 Low-level Gas. A gas concentration that is equivalent to 20 to 30 percent of the span value.

3.3.1.4 Zero Gas. A gas concentration of less than 0.25 percent of the span value. Purified air may be used as zero gas for the CO_2, CO, and SO_2 analyzers.

3.3.2 SO_2 Injection Gas. A known concentration of SO_2 in N_2. The concentration must be at least 2 percent SO_2 with a maximum of 100 percent SO_2. The cylinder concentration shall be certified by the manufacturer to be within 2 percent of the specified concentration.

3.4 Analysis. Three reagents are required for the analysis:

3.4.1 Acetone. Same as 3.2.

3.4.2 Dichloromethane (Methylene Chloride). Reagent grade, <0.001 percent residue in glass bottles.

3.4.3 Desiccant. Anhydrous calcium sulfate, calcium chloride, or silica gel, indicating type.

4. Gas Measurement System Performance Specifications.

4.1 Response Time. The amount of time required for the measurement system to display 95 percent of a step change in gas concentration. The response time for each analyzer and gas conditioning system shall be no more than 2 minutes.

4.2 Zero Drift. The zero drift value for each analyzer shall be less than 2.5 percent of the span value over the period of the test run.

4.3 Calibration Drift. The calibration drift value measured with the mid-level calibration gas for each analyzer shall be less than 2.5 percent of the span value over the period of the test run.

4.4 Resolution. The resolution of the output for each analyzer shall be 0.5 percent of span value or less.

4.5 Calibration Error. The linear calibration curve produced using the zero and mid-level calibration gases shall predict the actual response to the low-level and high-level calibration gases within 2 percent of the span value.

5. Procedure

5.1 Pretest Preparation.

5.1.1 Filter and Desiccant. Same as Method 5, Section 4.1.1.

5.1.2 Sampling Probe and Nozzle. The sampling location for the particulate sampling probe shall be 2.45±0.15 m (8±0.5 ft) above the platform upon which the wood heater is placed (i.e., the top of the scale).

Select a nozzle, if used, sized for the range of velocity heads, such that it is not necessary to change the nozzle size in order to maintain proportional sampling rates. During the run, do not change the nozzle size.

Select a suitable probe liner and probe length to effect minimum blockage.

5.1.3 Preparation of Particulate Sampling Train. During preparation and assembly of the particulate sampling train, keep all openings where contamination can occur covered until just prior to assembly or until sampling is about to begin.

Place 100 ml of water in each of the first two impingers, leave the third impinger empty, and transfer approximately 200 to 300 g of preweighed silica gel from its container to the fourth impinger. More silica gel may be used, but care should be taken to ensure that it is not entrained and carried out from the impinger during sampling. Place the container in a clean place for later use in the sample recovery. Alternatively, the weight of the silica gel plus impinger may be determined to the nearest 0.5 g and recorded.

Using a tweezer or clean surgical gloves, place one labeled (identified) and weighed filter in each of the filter holders. Be sure that each of the filters is properly centered and the gasket properly placed so as to prevent the sample gas stream from circumventing the filter. Check the filters for tears after assembly is completed.

When glass liners are used, install the selected nozzle using a Viton A O-ring. Other connecting systems using either 316 stainless steel or Teflon ferrules may be used. Mark the probe with heat resistant tape or by some other method to denote the proper distance into the stack or duct.

Set up the train as in Figure 5H 1, using (if necessary) a very light coat of silicone grease on all ground glass joints, greasing only the outer portion (see APTD–0576) to avoid possibility of contamination by the silicone grease.

Place crushed ice around the impingers.

5.1.4 Leak-Check Procedures.

5.1.4.1 Pretest Leak-Check. A pretest leak-check is recommended, but not required. If the tester opts to conduct the pretest leak-check, conduct the leak-check as described in Method 5, Section 4.1.4.1, except that a vacuum of 130 mm Hg (5 in. Hg) may be used instead of 380 mm Hg (15 in. Hg).

5.1.4.2 Leak-Checks During Sample Run. If, during the sampling run, a component (e.g., filter assembly or impinger) change becomes necessary, conduct a leak-check as described in Method 5, Section 4.1.4.2.

5.1.4.3 Post-Test Leak-Check. A leak-check is mandatory at the conclusion of each sampling run. The leak-check shall be done in accordance with the procedures described in Method 5, Section 4.1.4.3, except that a vacuum of 130 mm Hg (5 in. Hg) or the greatest vacuum measured during the test run, whichever is greater, may be used instead of 380 mm Hg (15 in. Hg).

5.1.5 Tracer Gas Procedure. A schematic of the tracer gas injection and sampling systems is shown in Figure 5H–2.

5.1.5.1 SO_2 Injection Probe. Install the SO_2 injection probe and dispersion loop in the stack at a location 2.8±0.15 m (9.5±0.5 ft) above the sampling platform.

5.1.5.2 SO_2 Sampling Probe. Install the SO_2 sampling probe at the centroid of the stack at a location 4±0.15 m (13.5±0.5 ft) above the sampling platform.

5.1.6 Flow Rate Measurement System. A schematic of the flow rate measurement system is shown in Figure 5H–2. Locate the flow rate measurement sampling probe at the centroid of the stack at a location 2.3±0.3 m (7.5±1 ft) above the sampling platform.

5.2 Test Run Procedures. The start of the test run is defined as in Method 28, Section 6.4.1.

5.2.1 Tracer Gas Procedure. Within 1 minute after closing the wood heater door at the start of the test run, meter a known concentration of SO_2 tracer gas at a constant flow rate into the wood heater stack. Monitor the SO_2 concentration in the stack, and record the SO_2 concentrations at 10-minute intervals or more often at the option of the tester. Adjust the particulate sampling flow rate proportionally to the SO_2 concentration changes using Equation 5H–6 (e.g., the SO_2 concentration at the first 10-minute reading is measured to be 100 ppm; the next 10 minute SO_2 concentration is measured to be 75 ppm: the particulate sample flow rate is adjusted from the initial 0.15 cfm to 0.20 cfm). A check for proportional rate variation shall be made at the completion of the test run using Equation 5H–10.

5.2.2 Volumetric Flow Rate Procedure. Apply stoichiometric relationships to the wood combustion process in determining the exhaust gas flow rate as follows:

5.2.2.1 Test Fuel Charge Weight. Record the test fuel charge weight in kilograms (wet) as specified in Method 28, Section 6.4.2. The wood is assumed to have the following weight percent composition: 51 percent carbon, 7.3 percent hydrogen, 41 percent oxygen. Record the wood moisture for each wood charge as described in Method 28, Section 6.2.5. The ash is assumed to have negligible effect on associated C, H, O concentrations after the test burn.

5.2.2.2 Measured Values. Record the CO and CO_2 concentrations in the stack on a dry basis every 10 minutes during the test run or more often at the option of the tester. Average these values for the test run. Use as a mole fraction (e.g., 10 percent CO_2 is recorded as 0.10) in the calculations to express total flow Equation 5H–7.

5.2.3 Particulate Train Operation. For each run, record the data required on a data sheet such as the one shown in Figure 5H–3. Be sure to record the initial dry gas meter reading. Record the dry gas meter readings at the beginning and end of each sampling time increment, when changes in flow rates are made, before and after each leak-check, and when sampling is halted. Take other readings as indicated on Figure 5H–3 at least once each 10 minutes during the test run.

Remove the nozzle cap, verify that the filter and probe heating systems are up to temperature, and that the probe is properly positioned. Position the nozzle, if used, facing into gas stream, or the probe tip in the 50 mm (2 in.) centroidal area of the stack.

Be careful not to bump the probe tip into the stack wall when removing or inserting the probe through the porthole; this minimizes the chance of extracting deposited material.

When the probe is in position, block off the openings around the probe and porthole to prevent unrepresentative dilution of the gas stream.

Begin sampling at the start of the test run as defined in Method 28, Section 6.4.1, start the sample pump, and adjust the sample flow rate to between 0.003 and 0.015 m^3/min (0.1 and 0.5 cfm). Adjust the sample flow rate proportionally to the stack flow during the test run (Section 5.2.1), and maintain a proportional sampling rate (within 10 percent of the desired value) and a filter holder temperature no greater than 120 °C (248 °F).

During the test run, make periodic adjustments to keep the temperature around the filter holder at the proper level. Add more ice to the impinger box and, if necessary, salt to maintain a temperature of less than 20 °C (68 °F) at the condenser/silica gel outlet.

If the pressure drop across the filter becomes too high, making sampling difficult to maintain, either filter may be replaced during a sample run. It is recommended that another complete filter assembly be used rather than attempting to change the filter itself. Before a new filter assembly is installed, conduct a leak-check (see Section

5.1.4.2). The total particulate weight shall include the summation of all filter assembly catches. The total time for changing sample train components shall not exceed 10 minutes. No more than one component change is allowed for any test run.

At the end of the test run, turn off the coarse adjust valve, remove the probe and nozzle from the stack, turn off the pump, record the final dry gas meter reading, and conduct a post-test leak-check, as outlined in Section 5.1.4.3.

5.3 Sample Recovery. Begin recovery of the probe and filter sample as described in Method 5, Section 4.2, except that an acetone blank volume of about 50 ml may be used. Treat the samples as follows:

Container No. 1. Carefully remove the filter from the front filter holder and place it in its identified petri dish container. Use a pair of tweezers and/or clean disposable surgical gloves to handle the filter. If it is necessary to fold the filter, do so such that the particulate cake is inside the fold. Carefully transfer to the petri dish any particulate matter and/or filter fibers which adhere to the filter holder gasket, by using a dry Nylon bristle brush and/or a sharp-edged blade. Seal and label the container.

Container No. 2. Remove the filter from the back filter holder using the same procedures as described above.

Container No. 3. Same as Method 5, Section 4.2 for Container No. 2. except that descriptions of capping and sample transport are not applicable if sample recovery and analysis occur in the same room.

Container No. 4. Treat the impingers as follows: Measure the liquid which is in the first three impingers to within 1 ml by using a graduated cylinder or by weighing it to within 0.5 g by using a balance (if one is available). Record the volume or weight of liquid present. This information is required to calculate the moisture content of the effluent gas.

Transfer the water from the first, second and third impingers to a glass container. Tighten the lid on the sample container so that water will not leak out. Rinse impingers and graduated cylinder, if used, with acetone three times or more. Avoid direct contact between the acetone and any stopcock grease or collection of any stopcock grease in the rinse solutions. Add these rinse solutions to sample Container No. 3.

Whenever possible, containers should be transferred in such a way that they remain upright at all times. Descriptions of capping and transport of samples are not applicable if sample recovery and analysis occur in the same room.

Container No. 5. Transfer the silica gel from the fourth impinger to its original container and seal. A funnel may make it easier to pour the silica gel without spilling. A rubber policeman may be used as an aid in removing the silica gel from the impinger. It is not necessary to remove the small amount of dust particles that may adhere to the impinger wall and are difficult to remove. Since the gain in weight is to be used for moisture calculations, do not use any water or other liquids to transfer the silica gel. If a balance is available, follow the procedure for Container No. 5 in Section 5.4.

5.4 Analysis. Record the data required on a sheet such as the one shown in Figure 5H–4. Handle each sample container as follows:

Containers No. 1 and 2. Leave the contents in the shipping container or transfer both of the filters and any loose particulate from the sample container to a tared glass weighing dish. Desiccate for no more than 36 hours. Weigh to a constant weight and report the results to the nearest 0.1 mg. For purposes of this Section, 5.6, the term ''constant weight'' means a difference of no more than 0.5 mg or 1 percent of total weight less tare weight, whichever is greater, between two consecutive weighings, with no less than 2 hours between weighings.

Container No. 3. Note the level of liquid in the container and confirm on the analysis sheet whether leakage occurred during transport. If a noticeable amount of leakage has occurred, either void the sample or use methods, subject to the approval of the Administrator, to correct the final results. Determination of sample leakage is not applicable if sample recovery and analysis occur in the same room. Measure the liquid in this container either volumetrically to within 1 ml or gravimetrically to within 0.5 g. Transfer the contents to a tared 250-ml or smaller beaker, and evaporate to dryness at ambient temperature and pressure. Desiccate and weigh to a constant weight. Report the results to the nearest 0.1 mg.

Container No. 4. Note the level of liquid in the container and confirm on the analysis sheet whether leakage occurred during transport. If a noticeable amount of leakage has occurred, either void the sample or use methods, subject to the approval of the Administrator, to correct the final results. Determination of sample leakage is not applicable if sample recovery and analysis occur in the same room. Measure the liquid in this container either volumetrically to within 1 ml or gravimetrically to within 0.5 g. Transfer the contents to a 500 ml or larger separatory funnel. Rinse the container with water, and add to the separatory funnel. Add 25 ml of dichloromethane to the separatory funnel, stopper and vigorously shake 1 minute, let separate and transfer the dichloromethane (lower layer) into a tared beaker or evaporating dish. Repeat twice more. It is necessary to rinse the Container No. 4 with dichloromethane. This rinse is added to the impinger extract container. Transfer the remaining water from the separatory funnel to a tared beaker or

evaporating dish and evaporate to dryness at 220 °F (105 °C). Desiccate and weigh to a constant weight. Evaporate the combined impinger water extracts at ambient temperature and pressure. Desiccate and weigh to a constant weight. Report both results to the nearest 0.1 mg.

Container No. 5. Weigh the spent silica gel (or silica gel plus impinger) to the nearest 0.5 g using a balance.

''Acetone Blank'' Container. Measure acetone in this container either volumetrically or gravimetrically. Transfer the acetone to a tared 250-ml or smaller beaker, and evaporate to dryness at ambient temperature and pressure. Desiccate and weigh to a constant weight. Report the results to the nearest 0.1 mg.

''Dichloromethane'' Container. Measure 75 ml of dichloromethane in this container and treat it the same as the ''acetone blank.''

''Water Blank'' Container. Measure 200 ml water into this container either volumetrically or gravemetrically. Transfer the water to a tared 250-ml beaker and evaporate to dryness at 105 °C (221 °F). Desiccate and weigh to a constant weight.

6. Calibration

Maintain a laboratory record of all calibrations.

6.1 Volume Metering System.

6.1.1 Initial and Periodic Calibration. Before the first certification or audit test and at least semiannually, thereafter, calibrate the volume metering system as described in Method 5G, Section 5.2.1.

6.1.2 Calibration After Use. Same as Method 5G, Section 5.2.2.

6.1.3 Acceptable Variation in Calibration. Same as Method 5G, Section 5.2.3.

6.2 Probe Heater Calibration. (Optional) The probe heating system shall be calibrated before the first certification or audit test. Use the procedure described in Method 5, Section 5.4.

6.3 Temperature Gauges. Use the procedure in Method 2, Section 4.3, to calibrate in-stack temperature gauges before the first certification or audit test and semiannually, thereafter.

6.4 Leak-Check of Metering System Shown in Figure 5H–1. That portion of the sampling train from the pump to the orifice meter shall be leak-checked after each certification or audit test. Use the procedure described in Method 5, Section 5.6.

6.5 Barometer. Calibrate against a mercury barometer before the first certification test and semiannually, thereafter. If a mercury barometer is used, no calibration is necessary. Follow the manufacturer's instructions for operation.

6.6 SO_2 Injection Rotameter. Calibrate the SO_2 injection rotameter system with a soap film flowmeter or similar direct volume measuring device with an accuracy of ± 2 percent. Operate the rotameter at a single reading for at least three calibration runs for 10 minutes each. When three consecutive calibration flow rates agree within 5 percent, average the three flow rates, mark the rotameter at the calibrated setting, and use the calibration flow rate as the SO_2 injection flow rate during the test run. Repeat the rotameter calibration before the first certification test and semiannually, thereafter.

6.7 Analyzer Calibration Error Check. Conduct the analyzer calibration error check prior to each certification test.

6.7.1 Calibration Gas Injection. After the flow rate measurement system and the tracer gas measurement system have been prepared for use (Sections 5.1.5.2 and 5.1.6), introduce zero gases and then the mid-level calibration gases for each analyzer. Set the analyzers' output responses to the appropriate levels. Then introduce the low-level and high-level calibration gases, one at a time, for each analyzer. Record the analyzer responses.

6.7.2 Acceptability Values. If the linear curve for any analyzer determined from the zero and mid-level calibration gases' responses does not predict the actual responses of the low-level and high-level gases within 2 percent of the span value, the calibration of that analyzer shall be considered invalid. Take corrective measures on the measurement system before repeating the calibration error check and proceeding with the test runs.

6.8 Measurement System Response Time. Introduce zero gas at the calibration gas valve into the flow rate measurement system and the tracer gas measurement system until all readings are stable. Then, quickly switch to introduce the mid-level calibration gas at the calibration value until a stable value is obtained. A stable value is equivalent to a change of less than 1 percent of span value for 30 seconds. Record the response time. Repeat the procedure three times. Conduct the response time check for each analyzer separately before its initial use and at least semiannually thereafter.

6.9 Measurement System Drift Checks. Immediately prior to the start of each test run (within 1 hour of the test run start), introduce zero and mid-level calibration gases, one at a time, to each analyzer through the calibration valve. Adjust the analyzers to respond appropriately. Immediately following each test run (within 1 hour of the end of the test run), or if adjustments to the analyzers or measurement systems are required during the test run, reintroduce the zero- and mid-level calibration gases and record the responses, as described above. Make no adjustments to the analyzers or the measurement system until after the drift checks are made.

If the difference between the analyzer responses and the known calibration gas values exceed the specified limits (Sections 4.2

and 4.3), the test run will be considered invalid and shall be repeated following corrections to the measurement system. Alternatively, recalibrate the measurement system and recalculate the measurement data. Report the test run results using both the initial and final calibration data.

6.10 Analytical Balance. Perform a multipoint calibration (at least five points spanning the operational range) of the analytical balance before the first certification test and semiannually, thereafter. Before each certification test, audit the balance by weighing at least one calibration weight (class F) that corresponds to 50 to 150 percent of the weight of one filter. If the scale cannot reproduce the value of the calibration weight to within 0.1 mg, conduct the multipoint calibration before use.

7. Calculations

Carry out calculations, retaining at least one extra decimal figure beyond that of the acquired data. Round off figures after the final calculation. Other forms of the equations may be used as long as they give equivalent results.

7.1 Nomenclature.

a=Sample flow rate adjustment factor.

BR=dry wood burn rate, kg/hr (lb/hr), from Method 28, Section 8.3.

B_{ws}=Water vapor in the gas stream, proportion by volume.

c_s=Concentration of particulate matter in stack gas, dry basis, corrected to standard conditions, g/dsm^3 (g/dscf).

E=Particulate emission rate, g/hr.

Δ H=Average pressure differential across the orifice meter (see Figure 5H–1), mm H_2O (in. H_2O).

L_a=Maximum acceptable leakage rate for either a post-test leak check or for a leak-check following a component change; equal to 0.00057 m^3/min (0.02 cfm) or 4 percent of the average sampling rate, whichever is less.

L_1=Individual leakage rate observed during the leak-check conducted before a component change, m^3/min (cfm).

L_p=Leakage rate observed during the post-test leak-check, m^3/min (cfm).

m_n=Total amount of particulate matter collected, mg.

m_a=Mass of residue of solvent after evaporation, mg.

N_C=Gram atoms of carbon/gram of dry fuel (lb/lb), equal to 0.0425.

N_T=Total dry moles of exhaust gas/Kg of dry wood burned, g-moles/kg (lb-moles/lb).

PR=Percent of proportional sampling rate.

P_{bar}=Barometric pressure at the sampling site, mm Hg (in. Hg).

P_{std}=Standard absolute pressure, 760 mm Hg (29.92 in. Hg).

Q_{sd}=Total gas flow rate, dsm^3/hr (dscf/hr).

Q_T=Flow of tracer gas, liters/min.

S_i=Concentration measured at the SO_2 analyzer for the ''i^{th}'' 10 minute interval, ppm.

S_1=Concentration measured at the SO_2 analyzer for the first 10-minute interval, ppm.

T_1=Absolute average stack gas temperature for the first 10-minute interval, °K (°R).

T_i=Absolute average stack gas temperature at the ''i^{th}'' 10-minute interval, °K (°R).

T_m=Absolute average dry gas meter temperature (see Figure 5H–3), °K (°R).

T_{std}=Standard absolute temperature, 293 °K (528 °R).

V_a=volume of solvent blank, ml.

V_{aw}=Volume of solvent used in wash, ml.

V_{lc}=Total volume of liquid collected in impingers and silica gel (see Figure 5H–4), ml.

V_m=Volume of gas sample as measured by dry gas meter, dm^3 (dcf).

$V_{m(std)}$=Volume of gas sample measured by the dry gas meter, corrected to standard conditions, dsm^3 (dscf).

$V_{ml(std)}$=Volume of gas sample measured by the dry gas meter during the first 10-minute interval, corrected to standard conditions, dsm^3 (dscf).

$V_{mi(std)}$=Volume of gas sample measured by the dry gas meter during the ''i^{th}'' 10-minute interval, dsm^3 (dscf).

$V_{w(std)}$=Volume of water vapor in the gas sample, corrected to standard conditions, sm^3 (scf).

W_a=Weight of residue in solvent wash, mg.

Y=Dry gas meter calibration factor.

Y_{CO}=Measured mole fraction of CO (dry), average from Section 5.2.2.2, g/g-mole (lb/lb-mole).

Y_{CO2}=Measured mole fraction of CO_2 (dry), average from Section 5.2.2.2, g/g-mole (lb/lb-mole).

Y_{HC}=Assumed mole fraction of HC (dry), g/g-mole (lb/lb-mole);
=0.0088 for catalytic wood heaters;
=0.0132 for non-catalytic wood heaters;
=0.0080 for pellet-fired wood heaters.

10=Length of first sampling period, minutes.

13.6=Specific gravity of mercury.

100=Conversion to percent.

θ=Total sampling time, min.

θ_1=Sampling time interval, from the beginning of a run until the first component change, min.

7.2 Average dry gas meter temperature and average orifice pressure drop. See data sheet (Figure 5H–3).

7.3 Dry Gas Volume. Correct the sample volume measured by the dry gas meter to standard conditions (20 °C, 760 mm Hg or 68 °F, 29.92 in. Hg) by using Equation 5H–1.

$$V_{m(std)} = V_m Y \frac{T_{std}}{T_m} \left(\frac{P_{bar} + \frac{\Delta H}{13.6}}{P_{std}} \right) = K_1 V_m Y \left(\frac{P_{bar} + (\Delta H/13.6)}{T_m} \right) \quad \text{Eq. 5H-1}$$

where;

K_1=0.3858 ° K/m. Hg for metric units.

=17.64 ° R/in. Hg for English units.

NOTE: Equation 5H–1 can be used as written unless the leakage rate observed during any of the mandatory leak-checks (i.e., the post-test leak-check or leak-check conducted before a component change) exceeds L_a.

If L_p exceeds L_a, Equation 5H–1 must be modified as follows:

(a) Case I. No component changes made during sampling run. In this case, replace V_m in Equation 5H–1 with the expression:

$[V_m-(L_p-L_a)\theta]$

(b) Case II. One component change made during the sampling run. In this case, replace V_m in Equation 5H–1 by the expression:

$V_m-(L_1-L_a)\theta_1$

and substitute only for those leakage rates (L_1 or L_p) which exceed L_a.

7.4 Volume of Water Vapor.

$V_{w(std)}=K_2 V_{lc}$ Eq. 5H–2

where:

K_2=0.001333 m^3/ml for metric units

=0.04707 ft^3/ml for English units.

7.5 Moisture Content.

$$B_{ws} = \left(\frac{V_{w(std)}}{V_{m(std)} + V_{w(std)}} \right) \quad \text{Eq. 5H-3}$$

7.6 Solvent Wash Blank.

$$W_a = \left(\frac{m_a V_{aw}}{V_a} \right) \quad \text{Eq. 5H-4}$$

7.7 Total Particulate Weight. Determine the total particulate catch from the sum of the weights obtained from containers 1, 2, 3, and 4 less the appropriate solvent blanks (see Figure 5H–4).

NOTE: Refer to Method 5, Section 4.1.5 to assist in calculation of results involving two filter assemblies.

7.8 Particulate Concentration.

c_s=(0.001 g/mg) ($m_n/V_{m(std)}$)

Eq. 5H–5

7.9 Sample Flow Rate Adjustment.

$$a = \frac{S_1}{S_i} \quad \text{Eq. 5H-6}$$

7.10 Carbon Balance for Total Moles of Exhaust Gas (dry)/Kg of Wood Burned in the Exhaust Gas.

$$N_T = \left(\frac{K_3 N_C}{(Y_{CO_2} + Y_{CO} + Y_{HC})} \right) \quad \text{Eq. 5H-7}$$

where:

K_3=1000 g/kg for metric units.

K_3=1.0 lb/lb for English units.

NOTE: The NO_x/SO_x portion of the gas is assumed to be negligible.

7.11 Total Stack Gas Flow Rate.

$Q_{sd}=K_4 N_T B R$

Eq. 5H–8

where:

K_4=0.02406 for metric units, dsm^3/g-mole.

=384.8 for English units, dscf/lb-mole.

7.12 Particulate Emission Rate.

$E=c_s Q_{sd}$

Eq. 5H–9

7.13 Proportional Rate Variation. Calculate PR for each 10-minute interval, i, of the test run.

$$PR = \left(\frac{\theta S_i V_{mi(std)}}{10 \sum_{i=1}^{n} [S_i V_{mi(std)}]} \right) \times 100 \quad \text{Eq. 5H-10}$$

7.14 Acceptable Results. If no more than 15 percent of the PR values for all the intervals exceed 90 percent ≤ PR ≤ 110 percent, and if no PR value for any interval exceeds 75 ≤

PR ≤ 125 percent, the results are acceptable. If the PR values for the test runs are judged to be unacceptable, report the test run emission results, but do not include the test run results in calculating the weighted average emission rate, and repeat the test.

8. Bibliography

1. Same as for Method 5, citations 1 through 11, with the addition of the following:

2. Oregon Department of Environmental Quality Standard Method for Measuring the emissions and efficiencies of Woodstoves, July 8, 1984. Pursuant to Oregon Administrative Rules Chapter 340, Division 21.

3. American Society for Testing Materials. Proposed Test Methods for Heating Performance and Emissions of Residential Wood-fired Closed Combustion-Chamber Heating Appliances. E–6 Proposal P 180. August 1986.

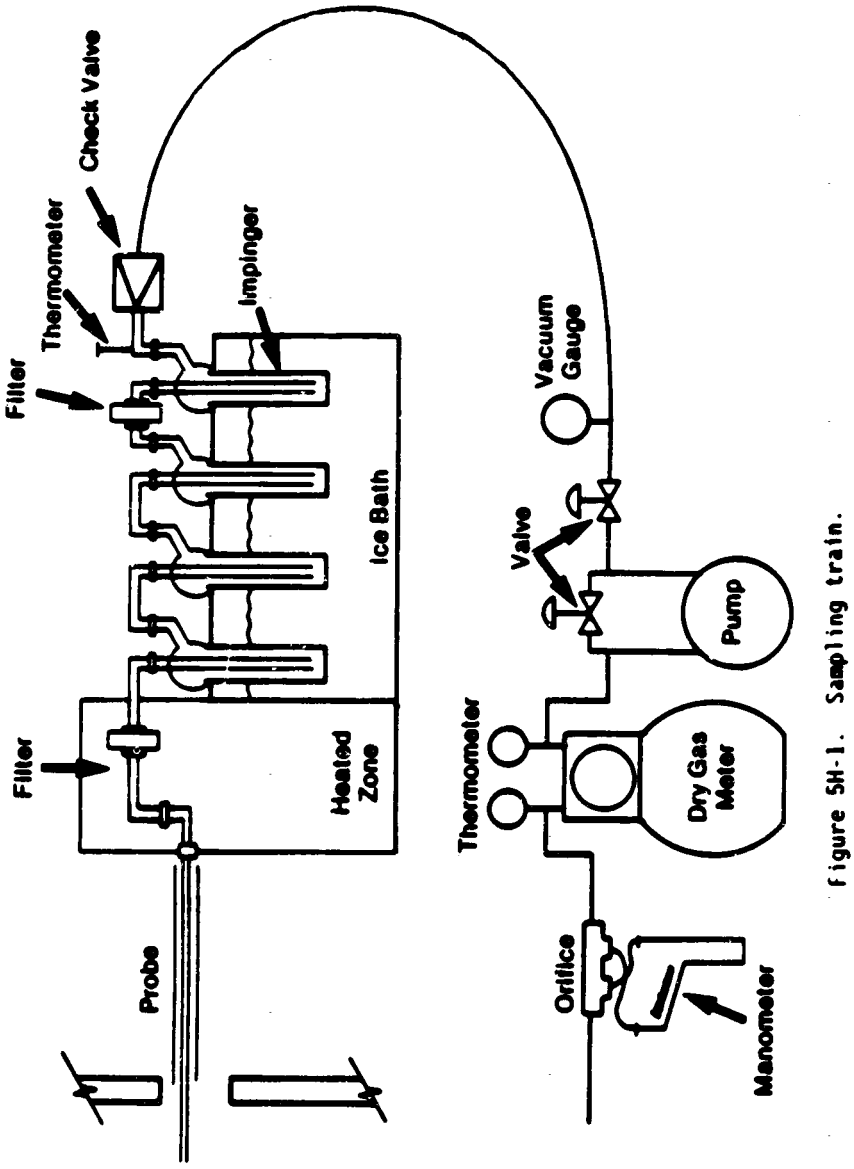

Figure 5H-1. Sampling train.

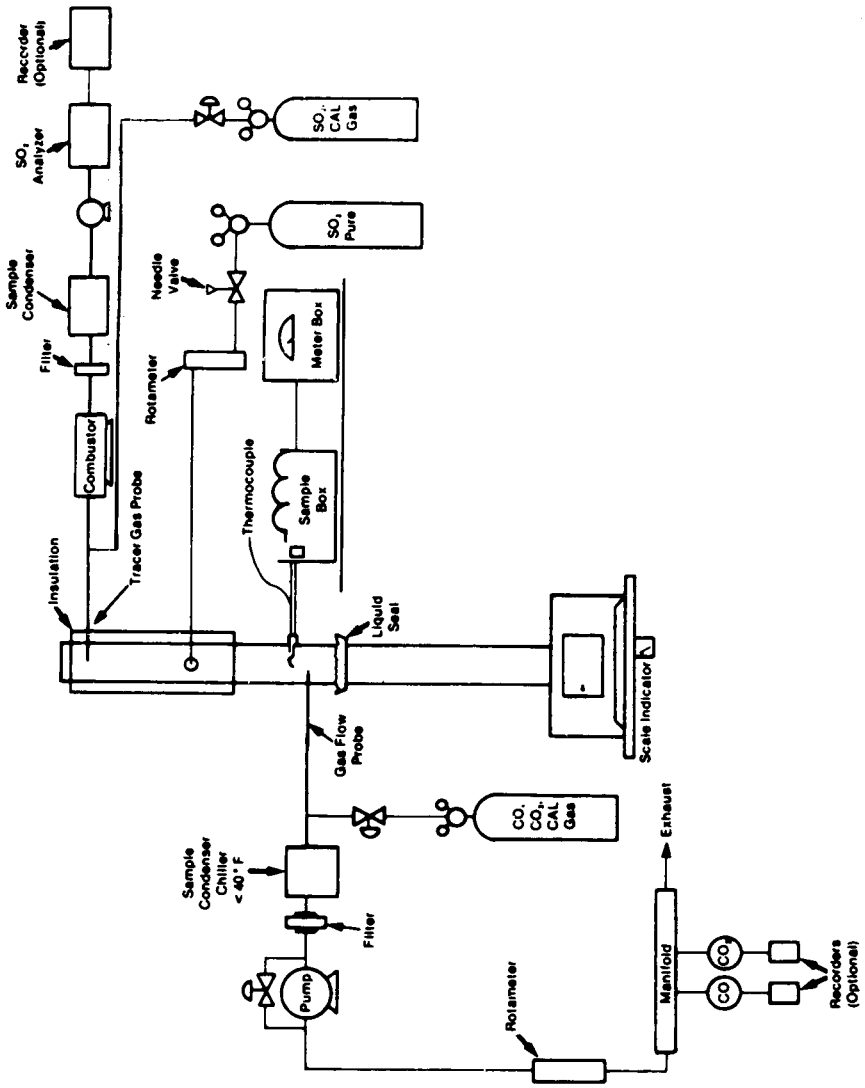

Figure 5H-2. Test system schematic for Method 5H.

Stove _____
Test Method _____
Operator _____
Date _____
Run No _____
Start Time _____
Stop Time _____
Sample Box No. _____
Meter Box No. _____
Meter ΔH @ (optional) _____
C Factor _____

Pitot tube coefficient, Cp _____
Room temperature, °C, (°F) _____
Barometric pressure mb (in Hg) _____
Measured or assumed moisture, % _____
Nozzle identification No m) _____
Average calibrated nozzle diameter, mm (in.) _____
Final leak rate, m³/min, (cfm) _____
Probe liner material _____
Draft or static pressure, mm H_2O (in H_2O) _____
Filter Nos. _____

Clock time	Sampling time (θ) min.	Vacuum mm Hg (in. Hg)	Flue temperature (T_s) °C (°F)	Flow in Flue m³/min (ft³/min)	Volume sampled in period m³ (ft³)	Gas sample volume m³ (ft³)	Gas sample temperature at dry gas meter °C (°F)	°C (°F)	Front filter holder temperature °C (°F)	Temperature of gas leaving dryer or last impinger °C (°F)
Total							Avg	Avg		
Average							Avg			

Figure 5H-3. Data sheet.

Stove _____
Date _____
Run No. _____
Filter Nos. _____
Amount liquid lost during transport (ml) _____
Acetone blank volume, ml _____
Acetone wash volume, ml _____
Acetone blank concentration, mg/ml _____
Acetone wash blank, mg _____

Dichloromethane blank volume, ml _____
Dichloromethane wash volume, ml _____
Dichloromethane blank concentration, mg/ml _____
Dichloromethane wash blank, mg _____
Water blank volume, ml _____
Water wash volume, ml _____
Water blank concentration, mg/ml _____
Water wash blank, mg _____

Container number	Weight of particulate collected, mg		
	Final weight	Tare weight	Weight gain
1 _____			
2 _____			
3 _____			
4 _____			
5 _____			
Total _____			
Less acetone blank _____			
Less dichloromethane blank _____			
Less water blank _____			
Weight of particulate matter _____			

	Volume of liquid water collected	
	Impinger volume, ml	Silica gel weight, g
Final _____		
Initial _____		
Liquid collected _____		
Total volume collected _____		g* ml

*Convert weight of water to volume by dividing total weight increase by density of water (1 g/ml).

$$\frac{\text{Increase, g}}{(1\ \text{g/ml})} = \text{Volume water, ml}$$

Figure 5H-4. Analysis data sheet.

METHOD 6—DETERMINATION OF SULFUR DIOXIDE EMISSIONS FROM STATIONARY SOURCES

1. *Principle and Applicability*

1.1 Principle. A gas sample is extracted from the sampling point in the stack. The sulfuric acid mist (including sulfur trioxide)

and the sulfur dioxide are separated. The sulfur dioxide fraction is measured by the barium-thorin titration method.

1.2 Applicability. This method is applicable for the determination of sulfur dioxide emissions from stationary sources. The minimum detectable limit of the method has been determined to be 3.4 milligrams (mg) of SO_2/m^3 (2.12×10^{-7} lb/ft^3). Although no upper limit has been established, tests have shown that concentrations as high as 80,000 mg/m^3 of SO_2 can be collected efficiently in two midget impingers, each containing 15 milliliters of 3 percent hydrogen peroxide, at a rate of 1.0 lpm for 20 minutes. Based on theoretical calculations, the upper concentration limit in a 20-liter sample is about 93,300 mg/m^3.

Possible interferents are free ammonia, water-soluble cations, and fluorides. The cations and fluorides are removed by glass wool filters and an isopropanol bubbler, and hence do not affect the SO_2 analysis. When samples are being taken from a gas stream with high concentrations of very fine metallic fumes (such as in inlets to control devices), a high-efficiency glass fiber filter must be used in place of the glass wool plug (i.e., the one in the probe) to remove the cation interferents.

Free ammonia interferes by reacting with SO_2 to form particulate sulfite and by reacting with the indicator. If free ammonia is present (this can be determined by knowledge of the process and the presence of white particulate matter in the probe and isopropanol bubbler), the alternative procedures in Section 7.2 shall be used.

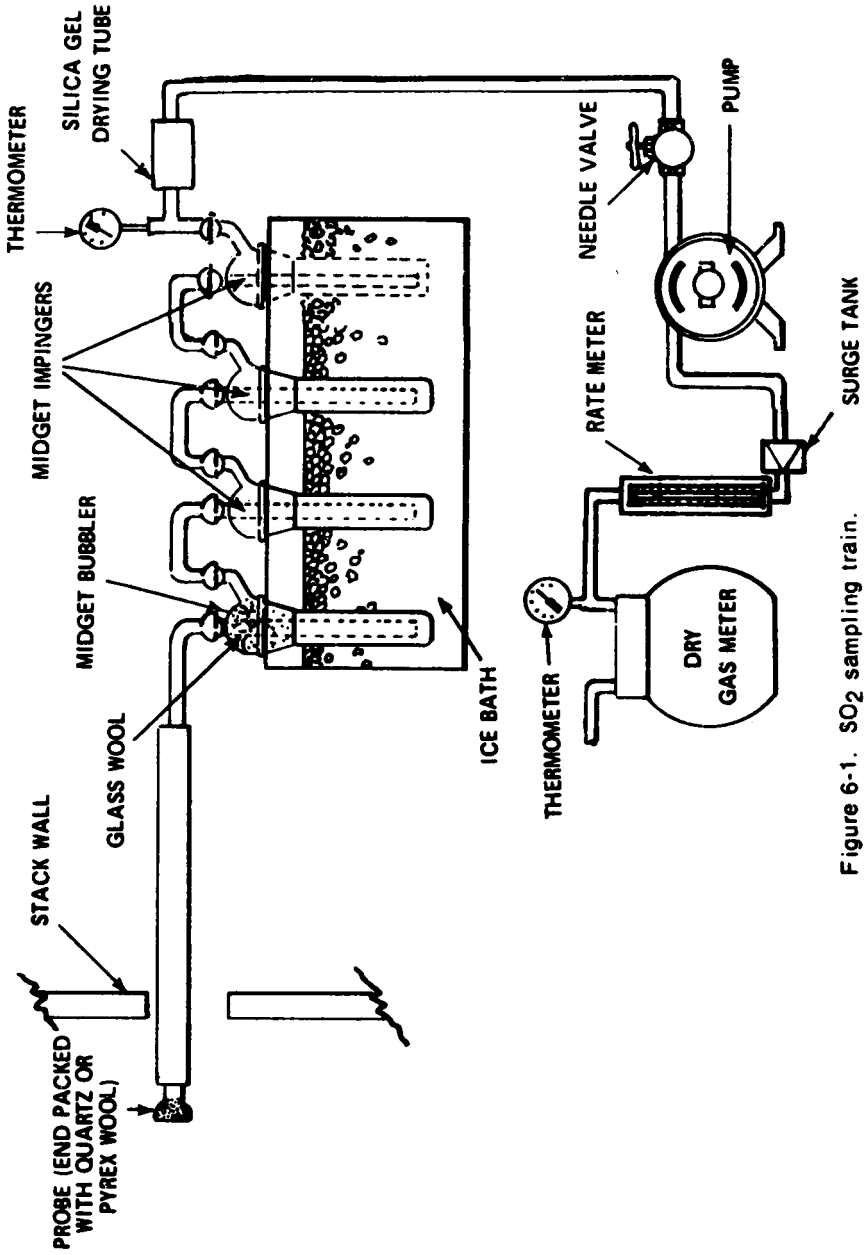

Figure 6-1. SO_2 sampling train.

2. *Apparatus*

2.1 Sampling. The sampling train is shown in Figure 6–1, and component parts are discussed below. The tester has the option of substituting sampling equipment described in Method 8 in place of the midget impinger equipment of Method 6. However,

the Method 8 train must be modified to include a heated filter between the probe and isopropanol impinger, and the operation of the sampling train and sample analysis must be at the flow rates and solution volumes defined in Method 8.

The tester also has the option of determining SO_2 simultaneously with particulate matter and moisture determinations by (1) replacing the water in a Method 5 impinger system with 3 percent peroxide solution, or (2) by replacing the Method 5 water impinger system with a Method 8 isopropanol-filter-peroxide system. The analysis for SO_2 must be consistent with the procedure in Method 8.

2.1.1 Probe. Borosilicate glass, or stainless steel (other materials of construction may be used, subject to the approval of the Administrator), approximately 6-mm inside diameter, with a heating system to prevent water condensation and a filter (either in-stack or heated out-stack) to remove particulate matter, including sulfuric acid mist. A plug of glass wool is a satisfactory filter.

2.1.2 Bubbler and Impingers. One midget bubbler, with medium-coarse glass frit and borosilicate or quartz glass wool packed in top (see Figure 6–1) to prevent sulfuric acid mist carryover, and three 30-ml midget impingers. The bubbler and midget impingers must be connected in series with leak-free glass connectors. silicone grease may be used, if necessary, to prevent leakage.

At the option of the tester, a midget impinger may be used in place of the midget bubbler.

Other collection absorbers and flow rates may be used, but are subject to the approval of the Administrator. Also, collection efficiency must be shown to be at least 99 percent for each test run and must be documented in the report. If the efficiency is found to be acceptable after a series of three tests, further documentation is not required. To conduct the efficiency test, an extra absorber must be added and analyzed separately. This extra absorber must not contain more than 1 percent of the total SO_2.

2.1.3 Glass Wool. Borosilicate or quartz.

2.1.4 Stopcock Grease. Acetone-insoluble, heatstable silicone grease may be used, if necessary.

2.1.5 Temperature Gauge. Dial thermometer, or equivalent, to measure temperature of gas leaving impinger train to within 1 °C (2 °F.)

2.1.6 Drying Tube. Tube packed with 6- to 16-mesh indicating type silica gel, or equivalent, to dry the gas sample and to protect the meter and pump. If the silica gel has been used previously, dry at 175 °C (350 °F) for 2 hours. New silica gel may be used as received. Alternatively, other types of desiccants (equivalent or better) may be used, subject to approval of the Administrator.

2.1.7 Valve. Needle valve, to regulate sample gas flow rate.

2.1.8 Pump. Leak-free diaphragm pump, or equivalent, to pull gas through the train. Install a small surge tank between the pump and rate meter to eliminate the pulsation effect of the diaphragm pump on the rotameter.

2.1.9 Rate Meter. Rotameter, or equivalent, capable of measuring flow rate to within 2 percent of the selected flow rate of about 1000 cc/min.

2.1.10 Volume Meter. Dry gas meter, sufficiently accurate to measure the sample volume within 2 percent, calibrated at the selected flow rate and conditions actually encountered during sampling, and equipped with a temperature gauge (dial thermometer, or equivalent) capable of measuring temperature to within 3 °C (5.4 °F).

2.1.11 Barometer. Mercury, aneroid, or other barometer capable of measuring atmospheric pressure to within 2.5 mm Hg (0.1 in. Hg). In many cases, the barometric reading may be obtained from a nearby National Weather Service station, in which case the station value (which is the absolute barometric pressure) shall be requested and an adjustment for elevation differences between the weather station and sampling point shall be applied at a rate of minus 2.5 mm Hg (0.1 in. Hg) per 30 m (100 ft) elevation increase or vice versa for elevation decrease.

2.1.12 Vacuum Gauge and Rotameter. At least 760 mm Hg (30 in. Hg) gauge and 0–40 cc/min rotameter, to be used for leak check of the sampling train.

2.2 Sample Recovery.

2.2.1 Wash Bottles. Polyethylene or glass, 500 ml, two.

2.2.2 Storage Bottles. Polyethylene, 100 ml, to store impinger samples (one per sample).

2.3 Analysis.

2.3.1 Pipettes. Volumetric type, 5-ml, 20-ml (one per sample), and 25-ml sizes.

2.3.2 Volumetric Flasks. 100-ml size (one per sample) and 1000 ml size.

2.3.3 Burettes. 5- and 50-ml sizes.

2.3.4 Erlenmeyer Flasks. 250 ml-size (one for each sample, blank, and standard).

2.3.5 Dropping Bottle. 125-ml size, to add indicator.

2.3.6 Graduated Cylinder. 100-ml size.

2.3.7 Spectrophotometer. To measure absorbance at 352 nanometers.

3. *Reagents*

Unless otherwise indicated, all reagents must conform to the specifications established by the Committee on Analytical Reagents of the American Chemical Society. Where such specifications are not available, use the best available grade.

3.1 Sampling.

3.1.1 Water. Deionized distilled to conform to ASTM Specification D1193–77, Type 3 (incorporated by reference—see §60.17). At the option of the analyst, the $KMnO_4$ test for oxidizable organic matter may be omitted when high concentrations of organic matter are not expected to be present. Unless otherwise specified, this water shall be used throughout this method.

3.1.2 Isopropanol, 80 percent. Mix 80 ml of isopropanol with 20 ml of water. Check each lot of isopropanol for peroxide impurities as follows: shake 10 ml of isopropanol with 10 ml of freshly prepared 10 percent potassium iodide solution. Prepare a blank by similarly treating 10 ml of water. After 1 minute, read the absorbance at 352 nanometers on a spectrophotometer. If absorbance exceeds 0.1, reject alcohol for use.

Peroxides may be removed from isopropanol by redistilling or by passage through a column of activated alumina; however, reagent grade isopropanol with suitably low peroxide levels may be obtained from commercial sources. Rejection of contaminated lots may, therefore, be a more efficient procedure.

3.1.3 Hydrogen Peroxide, 3 Percent. Dilute 30 percent hydrogen peroxide 1:9 (v/v) with water (30 ml is needed per sample). Prepare fresh daily.

3.1.4 Potassium Iodide Solution, 10 Percent. Dissolve 10.0 grams KI in water and dilute to 100 ml. Prepare when needed.

3.2 Sample Recovery.

3.2.1 Water. Same as in Section 3.1.1.

3.2.2 Isopropanol, 80 Percent. Mix 80 ml of isopropanol with 20 ml of water.

3.3 Analysis.

3.3.1 Water. Same as in Section 3.1.1.

3.3.2 Isopropanol, 100 Percent.

3.3.3 Thorin Indicator. 1-(o-arsonophenylazo)-2-naphthol-3,6-disulfonic acid, disodium salt, or equivalent. Dissolve 0.20 g in 100 ml of water.

3.3.4 Barium Perchlorate Solution, 0.0100 N. Dissolve 1.95 g of barium perchlorate trihydrate $[Ba(ClO_4)_2 \bullet 3H_2O]$ in 200 ml water and dilute to 1 liter with isopropanol. Alternatively, 1.22 g of $[BaCl_2 \bullet 2H_2O]$ may be used instead of the perchlorate. Standardize as in Section 5.5.

3.3.5 Sulfuric Acid Standard, 0.0100 N. Purchase or standardize to ±0.0002 N against 0.0100 N NaOH which has previously been standardized against potassium acid phthalate (primary standard grade).

3.3.6 Quality Assurance Audit Samples. Sulfate samples in glass vials prepared by EPA's Environmental Monitoring Systems Laboratory, Quality Assurance Division, Source Branch, Mail Drop 77A, Research Triangle Park, North Carolina 27711. Each set will consist of two vials having solutions of unknown concentrations. Only when making compliance determinations, obtain an audit sample set from the Quality Assurance Management office at each EPA regional Office or the responsible enforcement agency. (NOTE: The tester should notify the quality assurance office or the responsible enforcement agency at least 30 days prior to the test date to allow sufficient time for sample delivery.)

3.3.7 Hydrochloric Acid (HCl) Solution, 0.1 N (for use in Section 7.2). Carefully pipette 8.6 ml of concentrated HCl into a 1-liter volumetric flask containing water. Dilute to volume with mixing.

4. *Procedure*

4.1 Sampling.

4.1.1 Preparation of Collection Train. Measure 15 ml of 80 percent isopropanol into the midget bubbler and 15 ml of 3 percent hydrogen peroxide into each of the first two midget impingers. Leave the final midget impinger dry. Assemble the train as shown in Figure 6–1. Adjust probe heater to a temperature sufficient to prevent water condensation. Place crushed ice and water around the impingers.

4.1.2 Leak-Check Procedure. A leak check prior to the sampling run is optional; however, a leak check after the sampling run is mandatory. The leak-check procedure is as follows:

Temporarily attach a suitable (e.g., 0–40 cc/min) rotameter to the outlet of the dry gas meter and place a vacuum gauge at or near the probe inlet. Plug the probe inlet, pull a vaccum of at least 250 mm Hg (10 in. Hg), and note the flow rate as indicated by the rotameter. A leakage rate not in excess of 2 percent of the average sampling rate is acceptable.

NOTE: Carefully release the probe inlet plug before turning off the pump.

It is suggested (not mandatory) that the pump be leak-checked separately, either prior to or after the sampling run. If done prior to the sampling run, the pump leak-check shall precede the leak check of the sampling train described immediately above; if done after the sampling run, the pump leak-check shall follow the train leak-check. To leak check the pump, proceed as follows: Disconnect the drying tube from the probe-impinger assembly. Place a vacuum gauge at the inlet to either the drying tube or the pump, pull a vacuum of 250 mm (10 in.) Hg, plug or pinch off the outlet of the flow meter and then turn off the pump. The vacuum should remain stable for at least 30 seconds.

Other leak-check procedures may be used, subject to the approval of the Adminstrator, U.S. Environmental Protection Agency.

4.1.3 Sample Collection. Record the initial dry gas meter reading and barometric pressure. To begin sampling, position the tip of the probe at the sampling point, connect the probe to the bubbler, and start the pump. Adjust the sample flow to a constant rate of approximately 1.0 liter/min as indicated by the

rotameter. Maintain this constant rate (±10 percent) during the entire sampling run. Take readings (dry gas meter, temperatures at dry gas meter and at impinger outlet, and rate meter) at least every 5 minutes. Add more ice during the run to keep the temperature of the gases leaving the last impinger at 20 °C (68 °F) or less. At the conclusion of each run, turn off the pump, remove probe from the stack, and record the final readings. Conduct a leak check as in Section 4.1.2 (This leak check is mandatory.) If a leak is found, void the test run, or use procedures acceptable to the Administrator to adjust the sample volume for the leakage. Drain the ice bath, and purge the remaining part of the train by drawing clean ambient air through the system for 15 minutes at the sampling rate.

Clean ambient air can be provided by passing air through a charcoal filter or through an extra midget impinger with 15 ml of 3 percent H_2O_2. The tester may opt to simply use ambient air, without purification.

4.2 Sample Recovery. Disconnect the impingers after purging. Discard the contents of the midget bubbler. Pour the contents of the midget impingers into a leak-free polyethylene bottle for shipment. Rinse the three midget impingers and the connecting tubes with water, and add the washings to the same storage container. Mark the fluid level. Seal and identify the sample container.

4.3 Sample Analysis. Note level of liquid in container, and confirm whether any sample was lost during shipment; note this on analytical data sheet. If a noticeable amount of leakage has occurred, either void the sample or use methods, subject to the approval of the Administrator, to correct the final results.

Transfer the contents of the storage container to a 100-ml volumetric flask and dilute to exactly 100 ml with water. Pipette a 20-ml aliquot of this solution into a 250-ml Erlenmeyer flask, add 80 ml of 100 percent isopropanol and two to four drops of thorin indicator, and titrate to a pink endpoint using 0.0100 N barium perchlorate. Repeat and average the titration volumes. Run a blank with each series of samples. Replicate titrations must agree within 1 percent or 0.2 ml, whichever is larger.

NOTE: Protect the 0.0100 N barium perchlorate solution from evaporation at all times.

4.4 Audit Sample Analysis. Concurrently analyze the two audit samples and a set of compliance samples (Section 4.3) in the same manner to evaluate the technique of the analyst and the standards preparation. (NOTE: It is recommended that known quality control samples be analyzed prior to the compliance and audit sample analysis to optimize the system accuracy and precision. One source of these samples is the Source Branch listed in Section 3.3.6.) The same analysts, analytical reagents, and analytical system shall be used both for compliance samples and the EPA audit samples; if this condition is met, auditing of subsequent compliance analyses for the same enforcement agency within 30 days is not required. An audit sample set may not be used to validate different sets of compliance samples under the jurisdiction of different enforcement agencies, unless prior arrangements are made with both enforcement agencies.

Calculate the concentrations in mg/dscm using the specified sample volume in the audit instructions. (NOTE: Indication of acceptable results may be obtained immediately by reporting the audit results in mg/dscm and compliance results in total mg SO_2/sample by telephone to the responsible enforcement agency.) Include the results of both audit samples, their identification numbers, and the analyst's name with the results of the compliance determination samples in appropriate reports to the EPA regional office or the appropriate enforcement agency. Include this information with subsequent compliance analyses for the same enforcement agency during the 30-day period.

The concentrations of the audit samples obtained by the analyst shall agree within 5 percent of the actual concentrations. If the 5-percent specification is not met, reanalyze the compliance samples and audit samples, and include initial and reanalysis values in the test report (see NOTE in first paragraph of this section).

Failure to meet the 5-percent specification may require retests until the audit problems are resolved. However, if the audit results do not affect the compliance or noncompliance status of the affected facility, the Administrator may waive the reanalysis requirement, further audits, or retests and accept the results of the compliance test. While steps are being taken to resolve audit analysis problems, the Administrator may also choose to use the data to determine the compliance or noncompliance status of the affected facility.

5. *Calibration*

5.1 Metering System.

5.1.1 Initial Calibration. Before its initial use in the field, first leak check the metering system (drying tube, needle valve, pump, rotameter, and dry gas meter) as follows: place a vacuum gauge at the inlet to the drying tube and pull a vaccum of 250 mm (10 in.) Hg; plug or pinch off the outlet of the flow meter, and then turn off the pump. The vaccum shall remain stable for at least 30 seconds. Carefully release the vaccum gauge before releasing the flow meter end.

Next, remove the drying tube and calibrate the metering system (at the sampling flow

rate specified by the method) as follows: connect an appropriately sized wet test meter (e.g., 1 liter per revolution) to the inlet of the drying tube. Make three independent calibration runs, using at least five revolutions of the dry gas meter per run. Calculate the calibration factor, *Y* (wet test meter calibration volume divided by the dry gas meter volume, both volumes adjusted to the same reference temperature and pressure), for each run, and average the results. If any *Y* value deviates by more than 2 percent from the average, the metering system is unacceptable for use. Otherwise, use the average as the calibration factor for subsequent test runs.

5.1.2 Post-Test Calibration Check. After each field test series, conduct a calibration check as in Section 5.1.1 above, except for the following variations: (a) the leak check is not to be conducted, (b) three, or more revolutions of the dry gas meter may be used, and (c) only two independent runs need be made. If the calibration factor does not deviate by more than 5 percent from the initial calibration factor (determined in Section 5.1.1), then the dry gas meter volumes obtained during the test series are acceptable. If the calibration factor deviates by more than 5 percent, recalibrate the metering system as in Section 5.1.1, and for the calculations, use the calibration factor (initial or recalibration) that yields the lower gas volume for each test run.

5.2 Thermometers. Calibrate against mercury-in-glass thermometers.

5.3 Rotameter. The rotameter need not be calibrated but should be cleaned and maintained according to the manufactuturer's instruction.

5.4 Barometer. Calibrate against a mercury barometer.

5.5 Barium Perchlorate Solution. Standardize the barium perchlorate solution against 25 ml of standard sulfuric acid to which 100 ml of 100 percent isopropanol has been added.

Run duplicate analyses. Calculate the normality using the average of a pair of duplicate analyses where the titrations agree within 1 percent or 0.2 ml, whichever is larger.

6. *Calculations*

Carry out calculations, retaining at least one extra decimal figure beyond that of the acquired data. Round off figures after final calculation.

6.1 Nomenclature.

C_{so2}=Concentration of sulfur dioxide, dry basis corrected to standard conditions, mg/dscm (lb/dscf).

N=Normality of barium perchlorate titrant, milliequivalents/ml.

P_{bar}=Barometric pressure at the exit orifice of the dry gas meter, mm Hg (in. Hg).

P_{std}=Standard absolute pressure, 760 mm Hg (29.92 in. Hg).

T_m=Average dry gas meter absolute temperature, °K (°R).

T_{std}=Standard absolute temperature, 293°K (528°R).

V_a=Volume of sample aliquot titrated, ml.

V_m=Dry gas volume as measured by the dry gas meter, dcm (dcf).

V_m**(std)**=Dry gas volume measured by the dry gas meter, corrected to standard conditions, dscm (dscf).

V_{soln}=Total volume of solution in which the sulfur dioxide sample is contained, 100 ml.

V_t=Volume of barium perchlorate titrant used for the sample, ml (average or replicate titrations).

V_{tb}=Volume of barium perchlorate titrant used for the blank, ml.

Y=Dry gas meter calibration factor.

32.03=Equivalent weight of sulfur dioxide.

6.2 Dry Sample Gas Volume, Corrected to Standard Conditions.

$$V_{m(std)} = V_m Y \left(\frac{T_{std}}{T_m}\right)\left(\frac{P_{bar}}{P_{std}}\right) = K_1 Y \frac{V_m P_{bar}}{T_m}$$

Equation 6-1

Where:

K_1=0.3858°K/mm Hg for metric units.
=17.64°R/in. Hg for English units.

6.3 Sulfur Dioxide Concentration.

$$C_{SO_2} = K_2 \frac{(V_t - V_{tb})\, N\left(\frac{V_{soln}}{V_a}\right)}{V_{m(std)}}$$

Equation 6-2

Where:

K_3=32.03 mg/meq. for metric units.
=7.061×10^{-5} lb/meq. for English units.

6.4 Relative Error (RE) for QA Audit Samples, Percent.

$$RE = \frac{C_d - C_a}{C_a}(100) \qquad \text{Eq. 6-3}$$

Where:

C_d=Determined audit sample concentration, mg/dscm.

C_a=Actual audit sample concentration, mg/dscm.

7. *Alternative Procedures*

7.1 Dry Gas Meter as a Calibration Standard. A dry gas meter may be used as a calibration standard for volume measurements in place of the wet test meter specified in Section 5.1, provided that it is calibrated initially and recalibrated periodically according to the same procedures outlined in Method 5, Section 7.1, with the following exception: (1) the dry gas meter is calibrated against a wet test meter having a capacity of

1 liter/rev or 3 liters/rev and having the capability of measuring volume to within ±1 percent; (2) the dry gas meter is calibrated at 1 liter/min (2 cfh); and (3) the meter box of the Method 6 sampling train is calibrated at the same flow rate.

7.2 Critical Orifices for Volume and Rate Measurements. A critical orifice may be used in place of the dry gas meter specified in Section 2.1.10, provided that it is selected, calibrated, and used as follows:

7.2.1 Preparation of Collection Train. Prepare the sampling train as shown in Figure 6–2. The rotameter and surge tank are optional but are recommended in order to detect changes in the flow rate.

NOTE: The critical orifices can be adapted to a Method 6 type sampling train as follows: Insert sleeve type, serum bottle stoppers into two reducing unions. Insert the needle into the stoppers as shown in Figure 6–3.

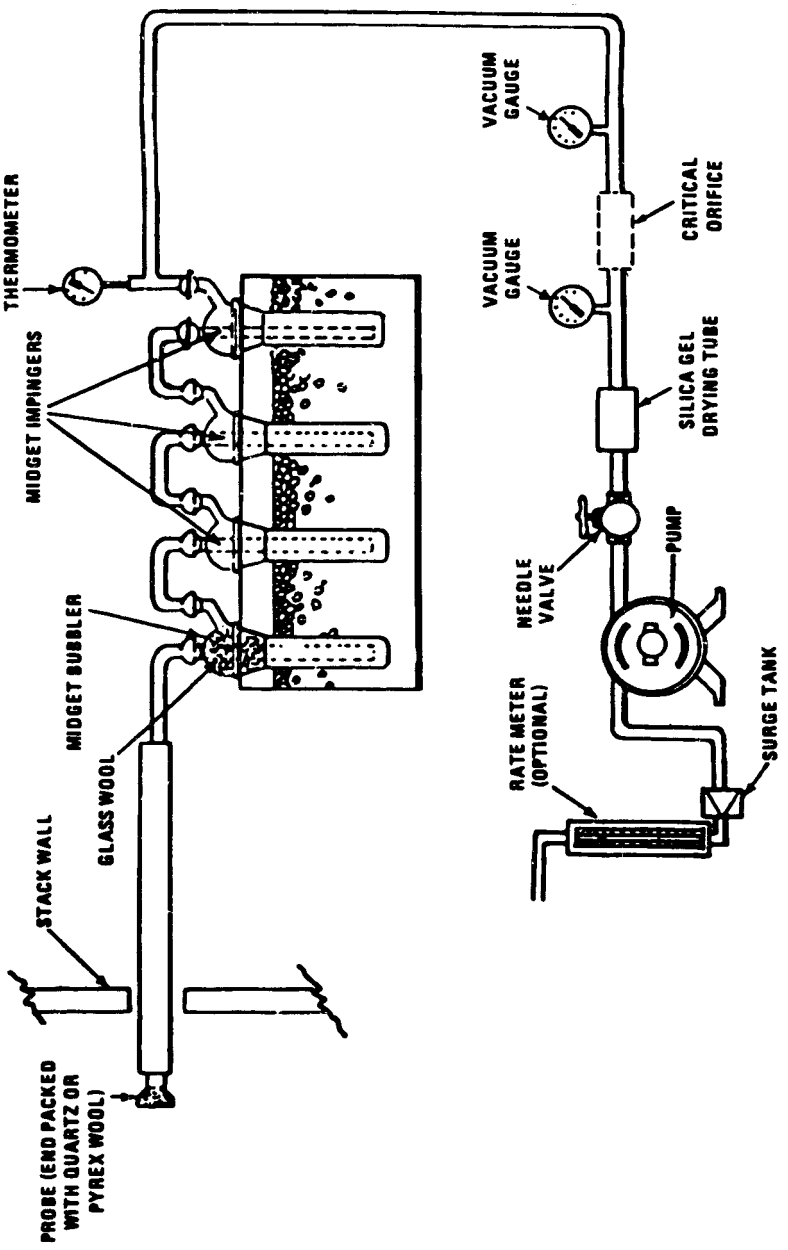

Figure 6-2. SO_2 sampling train using a critical orifice.

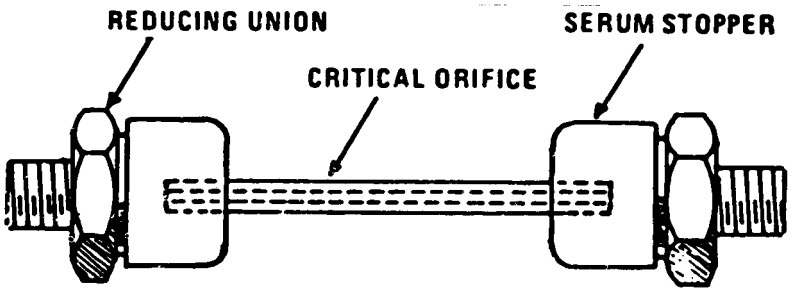

Figure 6-3. Critical orifice adaptation for Method 6 sampling train.

7.2.2 Selection of Critical Orifices. The procedure that follows describes the use of hypodermic needles and stainless steel needle tubings, which have been found suitable for use as critical orifices. Other materials and critical orifice designs may be used provided the orifices act as true critical orifices, i.e., a critical vacuum can be obtained, as described in this section. Select a critical orifice that is sized to operate at the desired flow rate. The needle sizes and tubing lengths shown below give the following approximate flow rates.

Gauge/cm	Flow rate, cc/min	Gauge/cm	Flow rate, cc/min
21/7.6	1100	23/3.8	500
22/2.9	1000	23/5.1	450
22/3.8	900	24/3.2	400

Determine the suitability and the appropriate operating vaccum of the critical orifice as follows: If applicable, temporarily attach a rotameter and surge tank to the outlet of the sampling train. Turn on the pump, and adjust the valve to give an outlet vacuum reading corresponding to about half of the atmospheric pressure. Observe the rotameter reading. Slowly increase the vacuum until a stable reading is obtained on the rotameter. Record the critical vacuum, which is the outlet vacuum when the rotameter first reaches a stable value. Orifices that do not reach a critical value shall not be used.

7.2.3 Field Procedure.

7.2.3.1 Leak-Check Procedure. A leak-check before the sampling run is recommended, but is optional. The leak-check procedure is as follows:

Temporarily attach a suitable (e.g., 0–40 cc/min) rotameter and surge tank, or a soap bubble meter and surge tank to the outlet of the pump. Plug the probe inlet, pull an outlet vacuum of at least 254 mm Hg (10 in. Hg), and note the flow rate as indicated by the rotameter or bubble meter. A leakage rate not in excess of 2 percent of the average sampling rate (Q_{std}) is acceptable. Carefully release the probe inlet plug before turning off the pump.

7.2.3.2 Moisture Determination. At the sampling location, prior to testing, determine the percent moisture of the ambient air using the wet and dry bulb temperatures or, if appropriate, a relative-humidity meter.

7.2.3.3 Critical Orifice Calibration. Prior to testing, at the sampling location, calibrate the entire sampling train using a 500-cc soap bubble meter which is attached to the inlet of the probe and an outlet vacuum of 25 to 50 mm Hg (1 to 2 in. Hg) above the critical vacuum. Record the information listed in Figure 6–4.

Calculate the standard volume of air measured by the soap bubble meter and the volumetric flow rate, using the equations below:

$$V_{sb(std)} = V_{sb}\left(\frac{T_{std}}{T_{amb}}\right)\left(\frac{P_{bar}}{P_{std}}\right) \qquad \text{Eq. 6-4}$$

$$Q_{std} = \frac{V_{sb(std)}}{\theta} \qquad \text{Eq. 6-5}$$

where:

P_{bar}=Barometric pressure, mm Hg (in. Hg).

P_{std}=Standard absolute pressure, 760 mm Hg (29.92 in. Hg).

Q_{std}=Volumetric flow rate through critical orifice, scm/min (scf/min).

T_{amb}=Ambient absolute temperature of air, °K (°R).

T_{std}=Standard absolute temperature, 273°K (528°R).

V_{sb}=Volume of gas as measured by the soap bubble meter, m^3 (ft^3).

$V_{sb(std)}$=Volume of gas as measured by the soap bubble meter, corrected to standard conditions, scm (scf).

Θ=Time, min.

Date _____ Train ID _____

Critical orifice size _____ Critical vacuum _____

		Pretest	Post-test
Soap bubble meter volume, V_{sb}	cc		
	m^3 (ft^3)		
Time, θ	sec		
	min		
Barometric pressure, P_{bar}	mm Hg (in. Hg)		
Ambient temperature, t_{amb}	°C (°F)		
Inlet vacuum, P_c	mm Hg (in. Hg)		
Outlet vacuum	mm Hg (in. Hg)		
$V_{sb(std)}$	m^3 (ft^3)		
Flow rate, Q_{std}	$\frac{m^3}{min}\left(\frac{ft^3}{min}\right)$		

Figure 6-4. Critical orifice calibration data.

7.2.3.4 Sampling. Operate the sampling train for sample collection at the same vacuum used during the calibration run. Start the watch and pump simultaneously. Take readings (temperature, rate meter, inlet vacuum, and outlet vacuum) at least every 5 minutes. At the end of the sampling run, stop the watch and pump simultaneously.

Conduct a post-test calibration run using the calibration procedure outlined in Section 7.2.3.3. If the Q_{std} obtained before and after the test differ by more than 5 pecent, void the test run; if not, calculate the volume of the gas measured with the critical orifice, $V_{m(std)}$, using Equation 6–6 and the average of Q_{std} of both runs, as follows:

$$V_{m(std)} = \bar{Q}_{std}\,\theta_s\,(1-B_{wa})\left(\frac{P_{bar}+P_{sr}}{P_{bar}+P_c}\right) \qquad \text{Eq. 6-6}$$

where:

$V_{m(std)}$=Dry gas volume measured with the critical orifice, corrected to standard conditions, dscm (dscf).

Q_{std}=Average flow rate of pretest and post-test calibration runs, scm/min (scf/min).

B_{wa}=Water vapor in ambient air, proportion by volume.

θ_s=Sampling time, min.

P_c=Inlet vacuum reading obtained during the calibration run, mm Hg (in. Hg).

P_{sr}=Inlet vacuum reading obtained during the sampling run, mm Hg (in. Hg).

If the percent difference between the molecular weight of the ambient air at saturated conditions and the sample gas is more than ±3 percent, then the molecular weight of the gas sample must be considered in the calculations using the following equation:

$$V_{m(std)} = \bar{Q}_{std}\,\theta_s\,(1-B_{wa})\sqrt{\frac{M_a}{M_s}}\left(\frac{P_{bar}+P_{sr}}{P_{bar}+P_c}\right) \qquad \text{Eq. 6-7}$$

where:

M_a=Molecular weight of the ambient air saturated at impinger temperature, g/g-mole (lb/lb-mole).

M_s=Molecular weight of the sample gas saturated at impinger temperature, g/g-mole (lb/lb-mole).

NOTE: A post-test leak-check is not necessary because the post-test calibration run results will indicate whether there is any leakage.

Drain the ice bath, and purge the sampling train using the procedure described in Section 4.1.3.

7.3 *Elimination of Ammonia Interference.* The following alternative procedures shall be used in addition to those specified in the method when sampling at sources having ammonia emissions.

7.3.1 *Sampling.* The probe shall be maintained at 275 °C and equipped with a high-efficiency in-stack filter (glass fiber) to remove particulate matter. The filter material shall be unreactive to SO_2. Whatman 934AH (formerly Reeve Angel 934AH) filters treated as described in Citation 10 of the Method 5 bibliography is an example of a filter that has been shown to work. Where alkaline particulate matter and condensed moisture are present in the gas stream, the filter shall be heated above the moisture dew point but below 225 °C.

7.3.2 *Sample Recovery.* Recover the sample according to Section 4.2 except for discarding the contents of the midget bubbler. Add the bubbler contents, including the rinsings of the bubbler with water, to the polyethylene bottle containing the rest of the sample. Under normal testing conditions where sulfur trioxide will not be present significantly, the tester may opt to delete the midget bubbler from the sampling train. If an approximation of the sulfur trioxide concentration is desired, transfer the contents of the midget bubbler to a separate polyethylene bottle.

7.3.3 *Sample Analysis.* Follow the procedures in Section 4.3, except add 0.5 ml of 0.1 N HC1 to the Erlenmeyer flask and mix before adding the indicator. The following analysis procedure may be used for an approximation of the sulfur trioxide concentration. The accuracy of the calculated concentration will depend upon the ammonia to

SO_2 ratio and the level of oxygen present in the gas stream. A fraction of the SO_2 will be counted as sulfur trioxide as the ammonia to SO_2 ratio and the sample oxygen content increases. Generally, when this ratio is 1 or less and the oxygen content is in the range of 5 percent, less than 10 percent of the SO_2 will be counted as sulfur trioxide. Analyze the peroxide and isopropanol sample portions separately. Analyze the peroxide portion as described above. Sulfur trioxide is determined by difference using sequential titration of the isopropanol portion of the sample. Transfer the contents of the isopropanol storage container to a 100-ml volumetric flask, and dilute to exactly 100 ml with water. Pipette a 20-ml aliquot of this solution into a 250-ml Erlenmeyer flask, add 0.5 ml of 0.1 N HC1, 80 ml of 100 percent isopropanol, and two to four drops of thorin indicator. Titrate to a pink endpoint using 0.0100 N barium perchlorate. Repeat and average the titration volumes that agree within 1 percent or 0.2 ml, whichever is larger. Use this volume in Equation 6–2 to determine the sulfur trioxide concentration. From the flask containing the remainder of the isopropanol sample, determine the fraction of SO_2 collected in the bubbler by pipetting 20-ml aliquots into 250-ml Erlenmeyer flasks. Add 5 ml of 3 percent hydrogen peroxide, 100 ml of 100 percent isopropanol, and two to four drops of thorin indicator, and titrate as before. From this titration volume, subtract the titrant volume determined for sulfur trioxide, and add the titrant volume determined for the peroxide portion. This final volume constitutes V_t, the volume of barium perchlorate used for the SO_2 sample.

8. *Bibliography*

1. Atmospheric Emissions from Sulfuric Acid Manufacturing Processes. U.S. DHEW, PHS, Division of Air Pollution. Public Health Service Publication No. 999–AP–13. Cincinnati, OH. 1965.

2. Corbett, P. F. The Determination of SO_2 and SO_3 in Flue Gases. Journal of the Institute of Fuel. *24:* 237–243, 1961.

3. Matty, R. E. and E. K. Diehl. Measuring Flue-Gas SO_2 and SO_3. Power. *101:* 94–97. November 1957.

4. Patton, W. F. and J. A. Brink, Jr. New Equipment and Techniques for Sampling Chemical Process Gases. J. Air Pollution Control Association. *13:* 162. 1963.

5. Rom, J. J. Maintenance, Calibration, and Operation of Isokinetic Source-sampling Equipment. Office of Air Programs, Environmental Protection Agency. Research Triangle Park, NC. APTD–0576. March 1972.

6. Hamil, H. F. and D. E. Camann. Collaborative Study of Method for the Determination of Sulfur Dioxide Emissions from Stationary Sources (Fossil-Fuel Fired Steam Generators). Environmental Protection Agency, Research Triangle Park, NC. EPA–650/4–74–024. December 1973.

7. Annual Book of ASTM Standards. Part 31; Water, Atmospheric Analysis. American Society for Testing and Materials. Philadelphia, PA. 1974. pp. 40–42.

8. Knoll, J. E. and M. R. Midgett. The Application of EPA Method 6 to High Sulfur Dioxide Concentrations. Environmental Protection Agency. Research Triangle Park, NC. EPA–600/4–76–038. July 1976.

9. Westlin, P. R. and R. T. Shigehara. Procedure for Calibrating and Using Dry Gas Meter Volume Meters as Calibration Standards. Source Evaluation Society Newsletter. *3*(1):17–30. February 1978.

10. Yu, K. K. Evaluation of Moisture Effect on Dry Gas Meter Calibration. Source Evaluation Society Newsletter. *5*(1):24–28. February 1980.

11. Lodge, J.P., Jr., J.B. Pate, B.E. Ammons, and G.A. Swanson. The Use of Hypodermic Needles as Critical Orifices in Air Sampling. J. Air Pollution Control Association. *16:*197–200. 1966.

12. Shigehara, R.T., and Candace B. Sorrell. Using Critical Orifices as Method 5 Calibration Standards. Source Evaluation Society Newsletter. *10*(3):4–15. August 1985.

METHOD 6A—DETERMINATION OF SULFUR DIOXIDE, MOISTURE, AND CARBON DIOXIDE EMISSIONS FROM FOSSIL FUEL COMBUSTION SOURCES

1. *Principle and Applicability*

1.1 Applicability. This method applies to the determination of sulfur dioxide (SO_2) emissions from fossil fuel combustion sources in terms of concentration (mg/m^3) and in terms of emission rate (ng/J) and to the determination of carbon dioxide (CO_2) concentration (percent). Moisture, if desired, may also be determined by this method.

The minimum detectable limit, the upper limit, and the interferences of the method for the measurement of SO_2 are the same as for Method 6. For a 20-liter sample, the method has a precision of 0.5 percent CO_2 for concentrations between 2.5 and 25 percent CO_2 and 1.0 percent moisture for moisture concentrations greater than 5 percent.

1.2 Principle. The principle of sample collection is the same as for Method 6 except that moisture and CO_2 are collected in addition to SO_2 in the same sampling train. Moisture and CO_2 fractions are determined gravimetrically.

2. *Apparatus*

2.1 Sampling. The sampling train is shown in Figure 6A–1; the equipment required is the same as for Method 6, Section 2.1, except as specified below:

2.1.1 SO_2 Absorbers. Two 30-ml midget impingers with a 1-mm restricted tip and two 30-ml midget bubblers with an unrestricted tip. Other types of impingers and

bubblers, such as Mae West for SO_2 collection and rigid cylinders for moisture absorbers containing Drierite, may be used with proper attention to reagent volumes and levels, subject to the Administrator's approval.

2.1.2 CO_2 Absorber. A sealable rigid cylinder or bottle with an inside diameter between 30 and 90 mm and a length between 125 and 250 mm and with appropriate connections at both ends.

NOTE: For applications downstream of wet scrubbers, a heated out-of-stack filter (either borosilicate glass wool or glass fiber mat) is necessary. The filter may be a separate heated unit or may be within the heated portion of the probe. If the filter is within the sampling probe, the filter should not be within 15 cm of the probe inlet or any unheated section of the probe, such as the connection to the first SO_2 absorber. The probe and filter should be heated to at least 20 °C above the source temperature, but not greater than 120 °C. The filter temperature (i.e., the sample gas temperature) should be monitored to assure the desired temperature is maintained. A heated Teflon connector may be used to connect the filter holder or probe to the first impinger.

NOTE: Mention of a brand name does not constitute endorsement by the Environmental Protection Agency.

2.2 Sample Recovery and Analysis. The equipment needed for sample recovery and analysis is the same as required for Method 6. In addition, a balance to measure within 0.05 g is needed for analysis.

3. *Reagents*

Unless otherwise indicated, all reagents must conform to the specifications established by the committee on analytical reagents of the American Chemical Society. Where such specifications are not available, use the best available grade.

3.1 Sampling. The reagents required for sampling are the same as specified in Method 6. In addition, the following reagents are required:

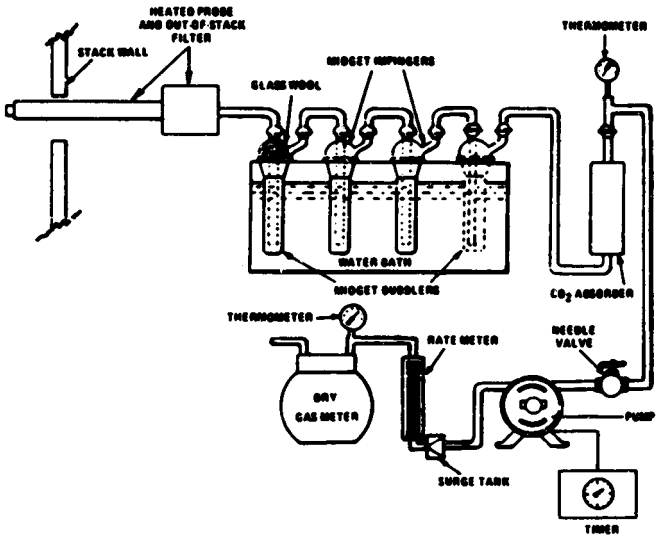

Figure 6A-1. Sampling train.

3.1.1 Drierite. Anhydrous calcium sulfate ($CaSO_4$) desiccant, 8 mesh, indicating type is recommended. (Do not use silica gel or similar desiccant in the application.)

3.1.2 CO_2 Absorbing Material. Ascarite II. Sodium hydroxide coated silica, 8 to 20 mesh.

3.2 Sample Recovery and Analysis. The reagents needed for sample recovery and analysis are the same as for Method 6, Sections 3.2 and 3.3, respectively.

4. *Procedure*

4.1 Sampling.

4.1.1 Preparation of Collection Train. Measure 15 ml of 80 percent isopropanol into the first midget bubbler and 15 ml of 3 percent hydrogen peroxide into each of the first two midget impingers as described in Method

6. Insert the glass wool into the top of the isopropanol bubbler as shown in Figure 6A–1. Into the fourth vessel in the train, the second midget bubbler, place about 25 g of Drierite. Clean the outsides of the bubblers and impingers, and weigh at room temperature (≃20 °C) to the nearest 0.1 g. Weigh the four vessels simultaneously, and record this initial mass.

With one end of the CO_2 absorber sealed, place glass wool in the cylinder to a depth of about 1 cm. Place about 150 g of CO_2 absorbing material in the cylinder on top of the glass wool, and fill the remaining space in the cylinder with glass wool. Assemble the cylinder as shown in Figure 6A–2. With the cylinder in a horizontal position, rotate it around the horizontal axis. The CO_2 absorbing material should remain in position during the rotation, and no open spaces or channels should be formed. If necessary, pack more glass wool into the cylinder to make the CO_2 absorbing material stable. Clean the outside of the cylinder of loose dirt and moisture and weigh at room temperature to the nearest 0.1 g. Record this initial mass.

Assemble the train as shown in Figure 6A–1. Adjust the probe heater to a temperature sufficient to prevent condensation (see Note in section 2.1.1). Place crushed ice and water around the impingers and bubblers. Mount the CO_2 absorber outside the water bath in a vertical flow position with the sample gas inlet at the bottom. Flexible tubing, e.g., Tygon, may be used to connect the last SO_2 absorbing bubbler to the Drierite absorber and to connect the Drierite absorber to the CO_2 absorber. A second, smaller CO_2 absorber containing Ascarite II may be added in line downstream of the primary CO_2 absorber as a breakthrough indicator. Ascarite II turns white when CO_2 is absorbed.

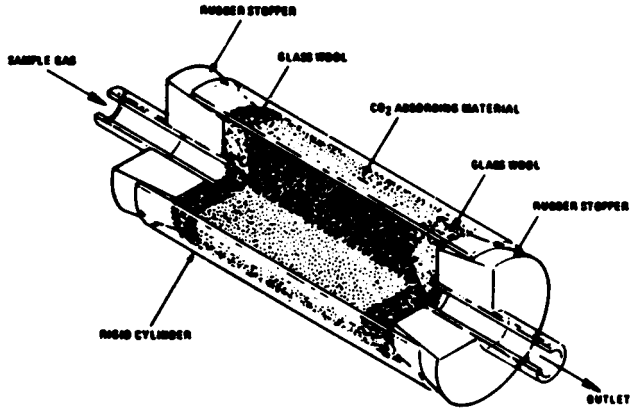

Figure 6A-2. CO_2 absorber.

4.1.2 Leak-Check Procedure and Sample Collection. The leak-check procedure and sample collection procedure are the same as specified in Method 6, Sections 4.1.2 and 4.1.3, respectively.

4.2 Sample Recovery.

4.2.1 Moisture Measurement. Disconnect the isopropanol bubbler, the SO_2 impingers, and the moisture absorber from the sample train. Allow about 10 minutes for them to reach room temperature, clean the outsides of loose dirt and moisture, and weigh them simultaneously in the same manner as in Section 4.1.1. Record this final mass.

4.2.2 Peroxide Solution. Discard the contents of the isopropanol bubbler and pour the contents of the midget impingers into a leak-free polyethylene bottle for shipping. Rinse the two midget impingers and connecting tubes with deionized distilled water, and add the washings to the same storage container.

4.2.3 CO_2 Absorber. Allow the CO_2 absorber to warm to room temperature (about 10 minutes), clean the outside of loose dirt and moisture, and weigh to the nearest 0.1 g in the same manner as in Section 4.1.1. Record this final mass. Discard used Ascarite II material.

4.3 Sample Analysis. The sample analysis procedure for SO_2 is the same as specified in Method 6, Section 4.3.

4.4 Quality Assurance (QA) Audit Samples. Only when this method is used for compliance determinations, obtain an audit sample set as directed in Section 3.3.6 of Method 6. Analyze the audit samples, and report the results as directed in Section 4.4 of Method 6. Acceptance criteria for the audit results are the same as in Method 6.

5. *Calibration*

The calibrations and checks are the same as required in Method 6, Section 5.

6. *Calculations*

Carry out calculations, retaining at least one extra decimal figure beyond that of the acquired data. Round off figures after final calculations. The calculations, nomenclature, and procedures are the same as specified in Method 6 with the addition of the following:

6.1 Nomenclature.

C_w= Concentration of moisture, percent.
C_{CO_2}=Concentration of CO_2, dry basis, percent.
m_{wi}=Initial mass of impingers, bubblers, and moisture absorber, g.
m_{wf}=Final mass of impingers, bubblers, and moisture absorber, g.
m_{ai}=Initial mass of CO_2 absorber, g.
m_{af}=Final mass of CO_2 absorber, g.
$V_{CO2(std)}$=Equivalent volume of CO_2 collected at standard conditions, dsm^3.
$V_{w(std)}$=Equivalent volume of moisture collected at standard conditions, sm^3.
5.467×10^{-4}=Equivalent volume of gaseous CO_2 at standard conditions per gram, sm^3/g.
1.336×10^{-3}=Equivalent volume of water vapor at standard conditions per gram, sm^3/g.

6.2 CO_2 Volume Collected, Corrected to Standard Conditions.

$$V_{CO2(std)} = 5.467 \times 10^{-4} (m_{af} - m_{ai}) \quad \text{Eq. 6A–1}$$

6.3 Moisture Volume Collected, Corrected to Standard Conditions.

$$V_{w(std)} = 1.336 \times 10^{-3} (m_{wf} - m_{wi}) \quad \text{Eq. 6A–2}$$

6.4 SO_2 Concentration.

$$C_{so_2} = 32.03 \frac{(V_t - V_{tb}) N \left(\frac{V_{soln}}{V_a}\right)}{V_{m(std)} + V_{CO_2(std)}} \quad \text{Eq. 6A–3}$$

6.5 CO_2 Concentration.

$$C_{CO_2} = \frac{V_{CO_2(std)}}{V_{m(std)} + V_{CO_2(std)}} \times 100 \quad \text{Eq. 6A–4}$$

6.6 Moisture Concentration.

$$C_w = \frac{V_{w(std)}}{V_{m(std)} + V_{w(std)} + V_{CO2(std)}} \quad \text{Eq. 6A-5}$$

7. *Emission Rate Procedure*

If the only emission measurement desired is in terms of emission rate of SO¶ (ng/J), an abbreviated procedure may be used. The differences between Method 6A and the abbreviated procedure are described below.

7.1 Sample Train. The sample train is the same as shown in Figure 6A–1 and as described in Section 4, except that the dry gas meter is not needed.

7.2 Preparation of the Collection Train. Follow the same procedure as in Section 4.1.1, except do not weigh the isopropanol bubbler, the SO_2 absorbing impingers or the moisture absorber.

7.3 Sampling. Operate the train as described in Section 4.1.3, except that dry gas meter readings, barometric pressure, and dry gas meter temperatures need not be recorded.

7.4 Sample Recovery. Follow the procedure in Section 4.2, except do not weigh the isopropanol bubbler, the SO_2 absorbing impingers, or the moisture absorber.

7.5 Sample Analysis. Analysis of the peroxide solution is the same as described in Section 4.3. Only when making compliance determinations, conduct an audit of the SO_2 analysis procedure as described in Section 4.4.

7.6 Calculations.

7.6.1 SO_2 Mass Collected.

$$m_{SO_2} = 32.03 (V_t - V_{tb}) N (V_{soln}/V_s) \quad \text{Eq. 6A-7}$$

Where:

m_{SO2}=Mass of SO_2 collected, mg.

7.6.2 Sulfur Dioxide Emission Rate.

$$E_{SO_2} = F_c (1.829 \times 10^9) \frac{m_{SO_2}}{(m_{af} - m_{ai})} \quad \text{Eq. 6A 8}$$

Where:

E_{SO2}=Emission rate of SO_2 (ng/J).
F_c=Carbon F Factor for the fuel burned, m^3/J, from Method 19.

8. *Bibliography*

1. Same as for Method 6, Citations 1 through 8, with the addition of the following:

2. Stanley, Jon and P.R. Westlin. An Alternate Method for Stack Gas Moisture Determination. Source Evaluation Society Newsletter. Vol. 3, No. 4. November 1978.

3. Whittle, Richard N. and P.R. Westlin. Air Pollution Test Report: Development and Evaluation of an Intermittent Integrated SO_2/CO_2 Emission Sampling Procedure. Environmental Protection Agency, Emission Standard and Engineering Division, Emission Measurement Branch. Research Triangle Park, NC. December 1979. 14 pages.

METHOD 6B—DETERMINATION OF SULFUR DIOXIDE AND CARBON DIOXIDE DAILY AVERAGE EMISSIONS FROM FOSSIL FUEL COMBUSTION SOURCES

1. *Principle and Applicability*

1.1 Applicability. This method applies to the determination of sulfur dioxide (SO_2) emissions from combustion sources in terms of concentration (ng/m^3) and emission rate (ng/J), and for the determination of carbon dioxide (CO_2) concentration (percent) on a daily (24 hours) basis.

The minimum detectable limits, upper limit, and the interferences for SO_2 measurements are the same as for Method 6. EPA-sponsored collaborative studies were undertaken to determine the magnitude of repeatability and reproducibility achievable by qualified testers following the procedures in this method. The results of the studies evolve from 145 field tests including comparisons with Methods 3 and 6. For measurements of emission rates from wet, flue gas desulfurization units in (ng/J), the repeatability (within laboratory precision) is 8.0 percent and the reproducibility (between laboratory precision) is 11.1 percent.

1.2 Principle. A gas sample is extracted from the sampling point in the stack intermittently over a 24-hour or other specified time period. Sampling may also be conducted continuously if the apparatus and procedures are appropriately modified (see Note in Section 4.1.1). The SO_2 and CO_2 are separated and collected in the sampling train. The SO_2 fraction is measured by the barium-thorin titration method, and CO_2 is determined gravimetrically.

2. *Apparatus*

The equipment required for this method is the same as specified for Method 6A, Section 2, except the isopropanol bubbler is not used. An empty bubbler for the collection of liquid droplets and does not allow direct contact between the collected liquid and the gas sample may be included in the train. For intermittent operation, include an industrial timer-switch designed to operate in the ''on'' position at least 2 minutes continuously and ''off'' the remaining period over a repeating cycle. The cycle of operation in designated in the applicable regulation. At a minimum, the sampling operation should include at least 12, equal, evenly-spaced periods per 24 hours.

For applications downstream of wet scrubbers, a heated out-of-stack filter (either borosilicate glass wool or glass fiber mat) is necessary. The probe and filter should be heated continuously to at least 20°C above the source temperature, but not greater than 120°C. The filter (i.e., sample gas) temperature should be monitored to assure the desired temperature is maintained.

Stainless steel sampling probes, type 316, are not recommended for use with Method 6B because of potential corrosion and contamination of sample. Glass probes or other types of stainless steel, e.g., Hasteloy or Carpenter 20, are recommended for long-term use.

Other sampling equipment, such as Mae West bubblers and rigid cylinders for moisture absorption, which requires sample or reagent volumes other than those specified in this procedure for full effectiveness may be used, subject to the approval of the Administrator.

3. *Reagents*

All reagents for sampling and analysis are the same as described in Method 6A, Section 3, except isopropanol is not used for sampling. The hydrogen peroxide absorbing solution shall be diluted to no less than 6 percent by volume, instead of 3 percent as specified in Method 6. If Method 6B is to be operated in a low sample flow condition (less than 100 ml/min), molecular sieve material may be substituted for Ascarite II as the CO_2 absorbing material. The recommended molecular sieve material is Union Carbide 1/16 inch pellets, 5A°, or equivalent. Molecular sieve material need not be discarded following the sampling run provided it is regenerated as per the manufacturer's instruction. Use of molecular sieve material at flow rates higher than 100 ml/min may cause erroneous CO_2 results.

4. *Procedure*

4.1 Sampling.

4.1.1 Preparation of Collection Train. Preparation of the sample train is the same as described in Method 6A, Section 4.1.4, with the addition of the following:

The sampling train is assembled as shown in Figure 6A–1, except the isopropanol bubbler is not included. The probe must be heated to a temperature sufficient to prevent water condensation and must include a filter (either in-stack, out-of-stack, or both) to prevent particulate entrainment in the peroxide impingers. The electric supply for the probe heat should be continuous and separate from the timed operation of the sample pump.

Adjust the timer-switch to operate in the ''on'' position from 2 to 4 minutes on a 2-hour repeating cycle or other cycle specified in the applicable regulation. Other timer sequences may be used with the restriction that the total sample volume collected is between 25 and 60 liters for the amounts of sampling reagents prescribed in this method.

Add cold water to the tank until the impingers and bubblers are covered at least two-thirds of their length. The impingers and bubbler tank must be covered and protected from intense heat and direct sunlight. If freezing conditions exist, the impinger solution and the water bath must be protected.

NOTE: Sampling may be conducted continuously if a low flow-rate sample pump (20

to 40 ml/min for the reagent volumes described in this method) is used. Then the timer-switch is not necessary. In addition, if the sample pump is designed for constant rate sampling, the rate meter may be deleted. The total gas volume collected should be between 25 and 60 liters for the amounts of sampling reagents prescribed in this method.

4.1.2 Leak-Check Procedure. The leak-check procedure is the same as described in Method 6, Section 4.1.2.

4.1.3 Sample Collection. Record the initial dry gas meter reading. To begin sampling, position the tip of the probe at the sampling point, connect the probe to the first impinger (or filter), and start the timer and the sample pump. Adjust the sample flow to a constant rate of approximately 1.0 liter/min as indicated by the rotameter. Assure that the timer is operating as intended, i.e., in the ''on'' position for the desired period and the cycle repeats as required.

During the 24-hour sampling period, record the dry gas meter temperature one time between 9:00 a.m. and 11:00 a.m., and the barometric pressure.

At the conclusion of the run, turn off the timer and the sample pump, remove the probe from the stack, and record the final gas meter volume reading. Conduct a leak check as described in Section 4.1.2. If a leak is found, void the test run or use procedures acceptable to the Administrator to adjust the sample volume for leakage. Repeat the steps in this section (4.1.3) for successive runs.

4.2 Sample Recovery. The procedures for sample recovery (moisture measurement, peroxide solution, and CO_2 absorber) are the same as in Method 6A, Section 4.2.

4.3 Sample Analysis. Analysis of the peroxide impinger solutions is the same as in Method 6, Section 4.3.

4.4 Quality Assurance (QA) Audit Samples. Only when this method is used for compliance determinations, obtain an audit sample set as directed in Section 3.3.6 of Method 6. Analyze the audit samples at least once for every 30 days of sample collection, and report the results as directed in Section 4.4 of Method 6. The analyst performing the sample analyses shall perform the audit analyses. If more than one analyst performed the sample analyses during the 30-day sampling period, each analyst shall perform the audit analyses and all audit results shall be reported. Acceptance criteria for the audit results are the same as in Method 6.

5. *Calibration*

5.1 Metering System.

5.1.1 Initial Calibration. The initial calibration for the volume metering system is the same as for Method 6, Section 5.1.1.

5.1.2 Periodic Calibration Check. After 30 days of operation of the test train, conduct a calibration check as in Section 5.1.1 above, except for the following variations: (1) The leak check is not to be conducted, (2) three or more revolutions of the dry gas meter must be used, and (3) only two independent runs need be made. If the calibration factor does not deviate by more than 5 percent from the initial calibration factor determined in Section 5.1.1, then the dry gas meter volumes obtained during the test series are acceptable and use of the train can continue. If the calibration factor deviates by more than 5 percent, recalibrate the metering system as in Section 5.1.1; and for the calculations for the preceding 30 days of data, use the calibration factor (initial or recalibration) that yields the lower gas volume for each test run. Use the latest calibration factor for succeeding tests.

5.2 Thermometers. Calibrate against mercury-in-glass thermometers initially and at 30-day intervals.

5.3 Rotameter. The rotameter need not be calibrated, but should be cleaned and maintained according to the manufacturer's instructions.

5.4 Barometer. Calibrate against a mercury barometer initially and at 30-day intervals.

5.5 Barium Perchlorate Solution. Standardize the barium perchlorate solution against 25 ml of standard sulfuric acid to which 100 ml of 100 percent isopropanol has been added.

6. *Calculations*

The nomenclature and calculation procedures are the same as in Method 6A with the following exceptions:

P_{bar}= Initial barometric pressure for the test period, mm Hg.

T_m= Absolute meter temperature for the test period, °K.

7. *Emission Rate Procedure*

The emission rate procedure is the same as described in Method 6A, Section 7, except that the timer is needed and is operated as described in this method. Only when this method is used for compliance determinations, perform the QA audit analyses as described in Section 4.4.

8. *Bibliography*

The bibliography is the same as described in Method 6A, with the addition of the following:

1. Butler, Frank E; J.E. Knoll, J.C. Suggs, M.R. Midgett, and W. Mason. The Collaborative Test of Method 6B: Twenty-Four-Hour Analysis of SO_2 and CO_2. JAPCA. Vol. 33, No. 10. October 1983.

METHOD 6C—DETERMINATION OF SULFUR DIOXIDE EMISSIONS FROM STATIONARY SOURCES (INSTRUMENTAL ANALYZER PROCEDURE)

1. *Applicability and Principle*

1.1 *Applicability*. This method is applicable to the determination of sulfur dioxide (SO_2)

concentrations in controlled and uncontrolled emissions from stationary sources only when specified within the regulations.

1.2 Principle. A gas sample is continuously extracted from a stack, and a portion of the sample is conveyed to an instrumental analyzer for determination of SO_2 gas concentration using an ultraviolet (UV), nondispersive infrared (NDIR), or fluorescence analyzer. Performance specifications and test procedures are provided to ensure reliable data.

2. *Range and Sensitivity*

2.1 Analytical Range. The analytical range is determined by the instrumental design. For this method, a portion of the analytical range is selected by choosing the span of the monitoring system. The span of the monitoring system shall be selected such that the pollutant gas concentration equivalent to the emission standard is not less than 30 percent of the span. If at any time during a run the measured gas concentration exceeds the span, the run shall be considered invalid.

2.2 Sensitivity. The minimum detectable limit depends on the analytical range, span, and signal-to-noise ratio of the measurement system. For a well designed system, the minimum detectable limit should be less than 2 percent of the span.

3. *Definitions*

3.1 Measurement System. The total equipment required for the determination of gas concentration. The measurement system consists of the following major subsystems:

3.1.1 Sample Interface. That portion of a system used for one or more of the following: sample acquisition, sample transport, sample conditioning, or protection of the analyzers from the effects of the stack effluent.

3.1.2 Gas Analyzer. That portion of the system that senses the gas to be measured and generates an output proportional to its concentration.

3.1.3 Data Recorder. A strip chart recorder, analog computer, or digital recorder for recording measurement data from the analyzer output.

3.2 Span. The upper limit of the gas concentration measurement range displayed on the data recorder.

3.3 Calibration Gas. A known concentration of a gas in an appropriate diluent gas.

3.4 Analyzer Calibration Error. The difference between the gas concentration exhibited by the gas analyzer and the known concentration of the calibration gas when the calibration gas is introduced directly to the analyzer.

3.5 Sampling System Bias. The difference between the gas concentrations exhibited by the measurement system when a known concentration gas is introduced at the outlet of the sampling probe and when the same gas is introduced directly to the analyzer.

3.6 Zero Drift. The difference in the measurement system output reading from the initial calibration response at the zero concentration level after a stated period of operation during which no unscheduled maintenance, repair, or adjustment took place.

3.7 Calibration Drift. The difference in the measurement system output reading from the initial calibration response at a midrange calibration value after a stated period of operation during which no unscheduled maintenance, repair, or adjustment took place.

3.8 Response Time. The amount of time required for the measurement system to display 95 percent of a step change in gas concentration on the data recorder.

3.9 Interference Check. A method for detecting analytical interferences and excessive biases through direct comparison of gas concentrations provided by the measurement system and by a modified Method 6 procedure. For this check, the modified Method 6 samples are acquired at the sample by-pass discharge vent.

3.10 Calibration Curve. A graph or other systematic method of establishing the relationship between the analyzer response and the actual gas concentration introduced to the analyzer.

4. *Measurement System Performance Specifications*

4.1 Analyzer Calibration Error. Less than ±2 percent of the span for the zero, midrange, and high-range calibration gases.

4.2 Sampling System Bias. Less than ±5 percent of the span for the zero, and mid- or high-range calibration gases.

4.3 Zero Drift. Less than ±3 percent of the span over the period of each run.

4.4 Calibration Drift. Less than ±3 percent of the span over the period of each run.

4.5 Interference Check. Less than ±7 percent of the modified Method 6 result for each run.

5. *Apparatus and Reagents*

5.1 Measurement System. Any measurement system for SO_2 that meets the specifications of this method. A schematic of an acceptable measurement system is shown in Figure 6C–1. The essential components of the measurement system are described below:

5.1.1 Sample Probe. Glass, stainless steel, or equivalent, of sufficient length to traverse the sample points. The sampling probe shall be heated to prevent condensation.

5.1.2 Sample Line. Heated (sufficient to prevent condensation) stainless steel or Teflon tubing, to transport the sample gas to the moisture removal system.

5.1.3 Sample Transport Lines. Stainless steel or Teflon tubing, to transport the sample from the moisture removal system to the sample pump, sample flow rate control, and sample gas manifold.

5.1.4 Calibration Valve Assembly. A three-way valve assembly, or equivalent, for blocking the sample gas flow and introducing calibration gases to the measurement system at the outlet of the sampling probe when in the calibration mode.

5.1.5 Moisture Removal System. A refrigerator-type condenser or similar device (e.g., permeation dryer), to remove condensate continuously from the sample gas while maintaining minimal contact between the condensate and the sample gas. The moisture removal system is not necessary for analyzers that can measure gas concentrations on a wet basis; for these analyzers, (1) heat the sample line and all interface components up to the inlet of the analyzer sufficiently to prevent condensation, and (2) determine the moisture content and correct the measured gas concentrations to a dry basis using appropriate methods, subject to the approval of the Administrator. The determination of sample moisture content is not necessary for pollutant analyzers that measure concentrations on a wet basis when (1) a wet basis CO_2 analyzer operated according to Method 3A is used to obtain simultaneous measurements, and (2) the pollutant/CO_2 measurements are used to determine emissions in units of the standard.

5.1.6 Particulate Filter. An in-stack or heated (sufficient to prevent water condensation) out-of-stack filter. The filter shall be borosilicate or quartz glass wool, or glass fiber mat. Additional filters at the inlet or outlet of the moisture removal system and inlet of the analyzer may be used to prevent accumulation of particulate material in the measurement system and extend the useful life of the components. All filters shall be fabricated of materials that are nonreactive to the gas being sampled.

5.1.7 Sample Pump. A leak-free pump, to pull the sample gas through the system at a flow rate sufficient to minimize the response time of the measurement system. The pump may be constructed of any material that is nonreactive to the gas being sampled.

5.1.8 Sample Flow Rate Control. A sample flow rate control valve and rotameter, or equivalent, to maintain a constant sampling rate within 10 percent.

(NOTE: The tester may elect to install a back-pressure regulator to maintain the sample gas manifold at a constant pressure in order to protect the analyzer(s) from overpressurization, and to minimize the need for flow rate adjustments.)

5.1.9 Sample Gas Manifold. A sample gas manifold, to divert a portion of the sample gas stream to the analyzer, and the remainder to the by-pass discharge vent. The sample gas manifold should also include provisions for introducing calibration gases directly to the analyzer. The manifold may be constructed of any material that is nonreactive to the gas being sampled.

5.1.10 Gas Analyzer. A UV or NDIR absorption or fluorescence analyzer, to determine continuously the SO_2 concentration in the sample gas stream. The analyzer shall meet the applicable performance specifications of Section 4. A means of controlling the analyzer flow rate and a device for determining proper sample flow rate (e.g., precision rotameter, pressure gauge downstream of all flow controls, etc.) shall be provided at the analyzer.

(NOTE: Housing the analyzer(s) in a clean, thermally-stable, vibration-free environment will minimize drift in the analyzer calibration.)

5.1.11 Data Recorder. A strip chart recorder, analog computer, or digital recorder, for recording measurement data. The data recorder resolution (i.e., readability) shall be 0.5 percent of span. Alternatively, a digital or analog meter having a resolution of 0.5 percent of span may be used to obtain the analyzer responses and the readings may be recorded manually. If this alternative is used, the readings shall be obtained at equally spaced intervals over the duration of the sampling run. For sampling run durations of less than 1 hour, measurements at 1-minute intervals or a minimum of 30 measurements, whichever is less restrictive, shall be obtained. For sampling run durations greater than 1 hour, measurements at 2-minute intervals or a minimum of 96 measurements, whichever is less restrictive, shall be obtained.

5.2 Method 6 Apparatus and Reagents. The apparatus and reagents described in Method 6, and shown by the schematic of the sampling train in Figure 6C–2, to conduct the interference check.

5.3 SO_2 Calibration Gases. The calibration gases for the gas analyzer shall be SO_2 in N_2 or SO_2 in air. Alternatively, SO_2/CO_2, SO_2/O_2, or $SO_2/CO_2/O_2$ gas mixtures in N_2 may be used. For fluorescence-based analyzers, the O_2 and CO_2 concentrations of the calibration gases as introduced to the analyzer shall be within 1 percent (absolute) O_2 and 1 percent (absolute) CO_2 of the O_2 and Co_2 concentrations of the effluent samples as introduced to the analyzer. Alternatively, for fluorescence-based analyzers, use calibration blends of SO_2 in air and the nomographs provided by the vendor to determine the quenching correction factor (the effluent O_2 and CO_2 concentrations must be known). Use three calibration gases as specified below:

5.3.1 High-Range Gas. Concentration equivalent to 80 to 100 percent of the span.

5.3.2 Mid-Range Gas. Concentration equivalent to 40 to 60 percent of the span.

5.3.3 Zero Gas. Concentration of less than 0.25 percent of the span. Purified ambient air may be used for the zero gas by passing air through a charcoal filter, or through one or more impingers containing a solution of 3 percent H_2O_2.

6. *Measurement System Performance Test Procedures*

Perform the following procedures before measurement of emissions (Section 7).

6.1 Calibration Gas Concentration Verification. There are two alternatives for establishing the concentrations of calibration gases. Alternative Number 1 is preferred.

6.1.1 Alternative Number 1—Use of calibration gases that are analyzed following the Environmental Protection Agency Traceability Protocol Number 1 (see Citation 1 in the Bibliography). Obtain a certification from the gas manufacturer that Protocol Number 1 was followed.

6.1.2 Alternative Number 2—Use of calibration gases not prepared according to Protocol Number 1. If this alternative is chosen, obtain gas mixtures with a manufacturer's tolerance not to exceed ±2 percent of the tag value. Within 6 months before the emission test, analyze each of the calibration gases in triplicate using Method 6. Citation 2 in the Bibliography describes procedures and techniques that may be used for this analysis. Record the results on a data sheet (example is shown in Figure 6C–3). Each of the individual SO_2 analytical results for each calibration gas shall be within 5 percent (or 5 ppm, whichever is greater) of the triplicate set average; otherwise, discard the entire set, and repeat the triplicate analyses. If the average of the triplicate analyses is within 5 percent of the calibration gas manufacturer's cylinder tag value, use the tag value; otherwise, conduct at least three additional analyses until the results of six consecutive runs agree with 5 percent (or 5 ppm, whichever is greater) of their average. Then use this average for the cylinder value.

6.2 Measurement System Preparation. Assemble the measurement system by following the manufacturer's written instructions for preparing and preconditioning the gas analyzer and, as applicable, the other system components. Introduce the calibration gases in any sequence, and make all necessary adjustments to calibrate the analyzer and the data recorder. Adjust system components to achieve correct sampling rates.

6.3 Analyzer Calibration Error. Conduct the analyzer calibration error check by introducing calibration gases to the measurement system at any point upstream of the gas analyzer as follows:

6.3.1 After the measurement system has been prepared for use, introduce the zero, mid-range, and high-range gases to the analyzer. During this check, make no adjustments to the system except those necessary to achieve the correct calibration gas flow rate at the analyzer. Record the analyzer responses to each calibration gas on a form similar to Figure 6C–4.

NOTE: A calibration curve established prior to the analyzer calibration error check may be used to convert the analyzer response to the equivalent gas concentration introduced to the analyzer. However, the same correction procedure shall be used for all effluent and calibration measurements obtained during the test.

6.3.2 The analyzer calibration error check shall be considered invalid if the gas concentration displayed by the analyzer exceeds ±2 percent of the span for any of the calibration gases. If an invalid calibration is exhibited, take corrective action, and repeat the analyzer calibration error check until acceptable performance is achieved.

6.4 Sampling System Bias Check. Perform the sampling system bias check by introducing calibration gases at the calibration valve installed at the outlet of the sampling probe. A zero gas and either the mid-range or high-range gas, whichever most closely approximates the effluent concentrations, shall be used for this check as follows:

6.4.1 Introduce the upscale calibration gas, and record the gas concentration displayed by the analyzer on a form similar to Figure 6C–5. Then introduce zero gas, and record the gas concentration displayed by the analyzer. During the sampling system bias check, operate the system at the normal sampling rate, and make no adjustments to the measurement system other than those necessary to achieve proper calibration gas flow rates at the analyzer. Alternately introduce the zero and upscale gases until a stable response is achieved. The tester shall determine the measurement system response time by observing the times required to achieve a stable response for both the zero and upscale gases. Note the longer of the two times as the response time.

6.4.2 The sampling system bias check shall be considered invalid if the difference between the gas concentrations displayed by the measurement system for the analyzer calibration error check and for the sampling system bias check exceeds ±5 percent of the span for either the zero or upscale calibration gas. If an invalid calibration is exhibited, take corrective action, and repeat the sampling system bias check until acceptable performance is achieved. If adjustment to the analyzer is required, first repeat the analyzer calibration error check, then repeat the sampling system bias check.

7. *Emission Test Procedure*

7.1 Selection of Sampling Site and Sampling Points. Select a measurement site and sampling points using the same criteria that are applicable to Method 6.

7.2 Interference Check Preparation. For each individual analyzer, conduct an interference check for at least three runs during the initial field test on a particular source category. Retain the results, and report

them with each test performed on that source category.

If an interference check is being performed, assemble the modified Method 6 train (flow control valve, two midget impingers containing 3 percent H_2O_2, and dry gas meter) as shown in Figure 6C–2. Install the sampling train to obtain a sample at the measurement system sample by-pass discharge vent. Record the initial dry gas meter reading.

7.3 Sample Collection. Position the sampling probe at the first measurement point, and begin sampling at the same rate as used during the sampling system bias check. Maintain constant rate sampling (i.e., ±10 percent) during the entire run. The sampling time per run shall be the same as for Method 6 plus twice the system response time. For each run, use only those measurements obtained after twice response time of the measurement system has elapsed, to determine the average effluent concentration. If an interference check is being performed, open the flow control valve on the modified Method 6 train concurrent with the initiation of the sampling period, and adjust the flow to 1 liter per minute (±10 percent).

(NOTE: If a pump is not used in the modified Method 6 train, caution should be exercised in adjusting the flow rate since overpressurization of the impingers may cause leakage in the impinger train, resulting in positively biased results).

7.4 Zero and Calibration Drift Tests. Immediately preceding and following each run, or if adjustments are necessary for the measurement system during the run, repeat the sampling system bias check procedure described in Section 6.4 (Make no adjustments to the measurement system until after the drift checks are completed.) Record and analyzer's responses on a form similar to Figure 6C–5.

7.4.1 If either the zero or upscale calibration value exceeds the sampling system bias specification, then the run is considered invalid. Repeat both the analyzer calibration error check procedure (Section 6.3) and the sampling system bias check procedure (Section 6.4) before repeating the run.

7.4.2 If both the zero and upscale calibration values are within the sampling system bias specification, then use the average of the initial and final bias check values to calculate the gas concentration for the run. If the zero or upscale calibration drift value exceeds the drift limits, based on the difference between the sampling system bias check responses immediately before and after the run, repeat both the analyzer calibration error check procedure (Section 6.3) and the sampling system bias check procedure (Section 6.4) before conducting additional runs.

7.5 Interference Check (if performed). After completing the run, record the final dry gas meter reading, meter temperature, and barometric pressure. Recover and analyze the contents of the midget impingers, and determine the SO_2 gas concentration using the procedures of Method 6. (It is not necessary to analyze EPA performance audit samples for Method 6.) Determine the average gas concentration exhibited by the analyzer for the run. If the gas concentrations provided by the analyzer and the modified Method 6 differ by more than 7 percent of the modified Method 6 result, the run is invalidated.

8. *Emission Calculation*

The average gas effluent concentration is determined from the average gas concentration displayed by the gas analyzer, and is adjusted for the zero and upscale sampling system bias checks, as determined in accordance with Section 7.4. The average gas concentration displayed by the analyzer may be determined by integration of the area under the curve for chart recorders, or by averaging all of the effluent measurements. Alternatively, the average may be calculated from measurements recorded at equally spaced intervals over the entire duration of the run. For sampling run durations of less than 1 hour, measurements at 1-minute intervals or a minimum of 30 measurements, whichever is less restrictive, shall be used. For sampling run durations greater than 1 hour, measurements at 2–minute intervals or a minimum of 96 measurements, whichever is less restrictive, shall be used. Calculate the effluent gas concentration using Equation 6C–1.

$$C_{gas} = \left(\overline{C} - C_o\right)\frac{C_{ma}}{C_m - C_o} \qquad \text{Eq. 6C-1}$$

Where:

C_{gas} = Effluent gas concentration, dry basis, ppm.

$\overline{C}$ = Average gas concentration indicated by gas analyzer, dry basis, ppm.

C_o = Average of initial and final system calibration bias check responses for the zero gas, ppm.

C_m = Average of initial and final system calibration bias check responses for the upscale calibration gas, ppm.

C_{ma} = Actual concentration of the upscale calibration gas, ppm.

9. *Bibliography*

1. Traceability Protocol for Establishing True Concentrations of Gases Used for Calibrations and Audits of Continuous Source Emission Monitors: Protocol Number 1. U.S. Environmental Protection Agency, Quality Assurance Division. Research Triangle Park, NC. June 1978.

2. Westlin, Peter R. and J. W. Brown. Methods for Collecting and Analyzing Gas Cylinder Samples. Source Evaluation Society Newsletter. *3*(3):5–15. September 1978.

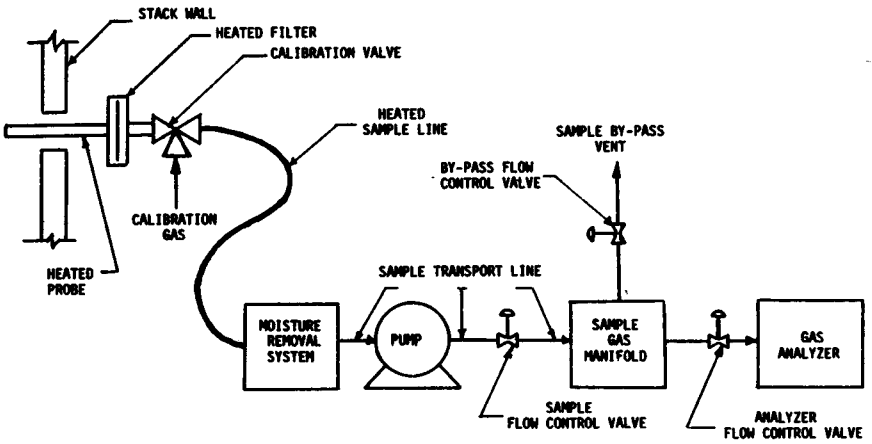

Figure 6C-1. Measurement system schematic.

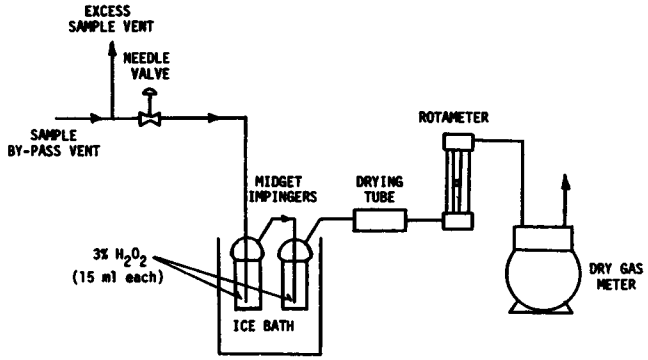

Figure 6C-2. Interference check sampling train.

FIGURE 6C–3—ANALYSIS OF CALIBRATION GASES

Analytic method used

Date

	Gas concentration (indicate units)		
	Zero [a]	Mid-range [b]	High-range [c]
Sample run:			
1			
2			
3			
Average			
Maximum percent deviation			

[a] Average must be less than 0.25 percent of span.

[b] Average must be 50 to 60 percent of span.
[c] Average must be 80 to 90 percent of span.

FIGURE 6C–4—ANALYZER CALIBRATION DATA

Source identification:
Test personnel:
Date:
Analyzer calibration data for sampling runs:
Span:

	Cylinder value (indicate units)	Analyzer calibration response (indicate units)	Absolute difference (indicate units)	Difference (percent of span)
Zero gas				
Mid-range gas				
High-range gas				

FIGURE 6C–5—SYSTEM CALIBRATION BIAS AND DRIFT DATA

Source identification:
Test personnel:
Date:
Run number:
Span:

	Analyzer calibration response	Initial values		Final values		Drift (percent of span)
		System calibration response	System cal. bias (percent of span)	System calibration response	System cal. bias (percent of span)	
Zero gas						
Upscale gas						

$$\text{System Calibration Bias} = \frac{\text{System Cal. Response-Analyzer Cal. Response}}{\text{Span}} \times 100$$

$$\text{Drift} = \frac{\text{Final System Cal. Response-Initial System Cal. Response}}{\text{Span}} \times 100$$

METHOD 7—DETERMINATION OF NITROGEN OXIDE EMISSIONS FROM STATIONARY SOURCES

1. *Principle and Applicability*

1.1 Principle. A grab sample is collected in an evacuated flask containing a dilute sulfuric acid-hydrogen peroxide absorbing solution, and the nitrogen oxides, except nitrous oxide, are measured colorimetrically using the phenoldisulfonic acid (PDS) procedure.

1.2 Applicability. This method is applicable to the measurement of nitrogen oxides emitted from stationary sources. The range of the method has been determined to be 2 to 400 milligrams NO_x (as NO_2) per dry standard cubic meter, without having to dilute the sample.

2. *Apparatus*

2.1 Sampling (see Figure 7–1). Other grab sampling systems or equipment, capable of measuring sample volume to within ±2.0 percent and collecting a sufficient sample volume to allow analytical reproducibility to within ±5 percent, will be considered acceptable alternatives, subject to approval of the Administrator, U.S. Environmental Protection Agency. The following equipment is used in sampling:

2.1.1 Probe. Borosilicate glass tubing, sufficiently heated to prevent water condensation and equipped with an in-stack or out-stack filter to remove particulate matter (a

[3] Mention of trade names or specific products does not constitute endorsement by the Environmental Protection Agency.

plug of glass wool is satisfactory for this purpose). Stainless steel or Teflon[3] tubing may also be used for the probe. Heating is not necessary if the probe remains dry during the purging period.

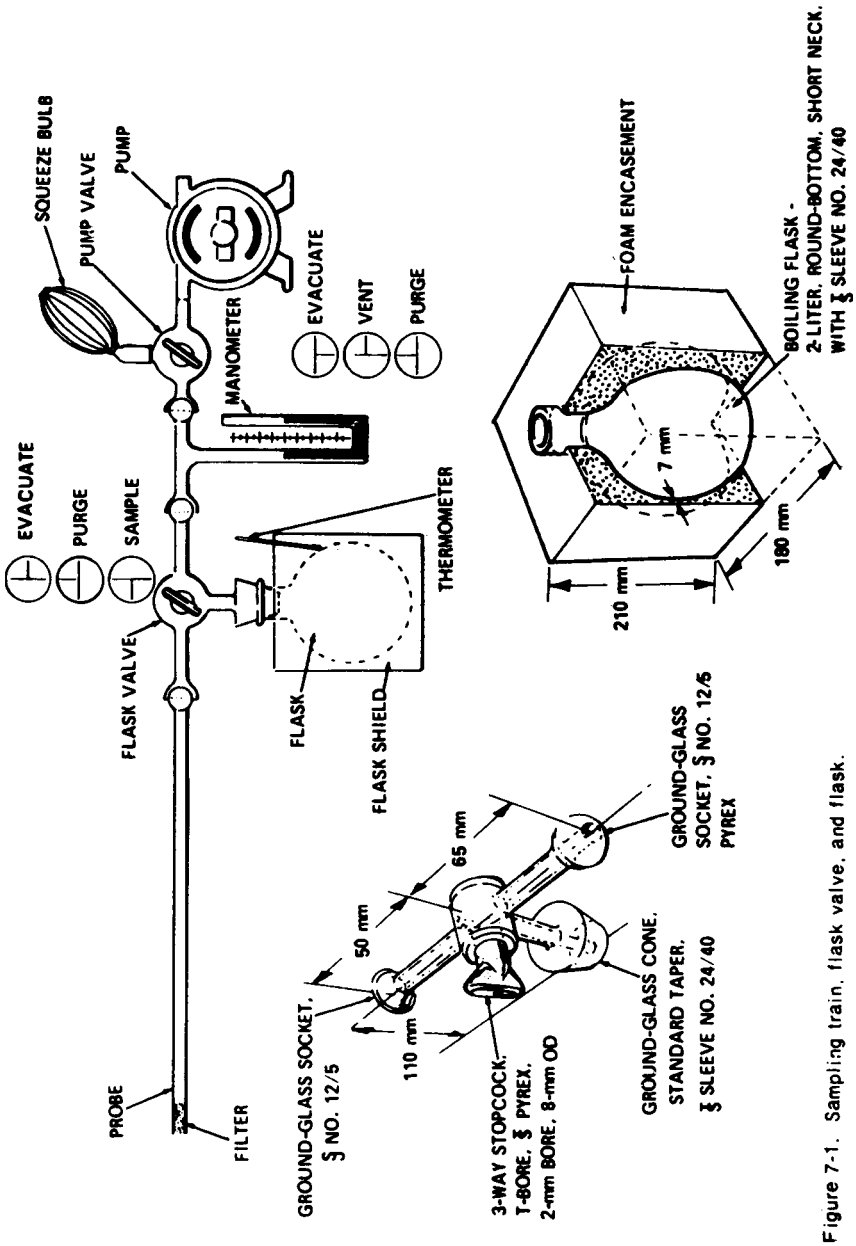

Figure 7-1. Sampling train, flask valve, and flask.

2.1.2 Collection Flask. Two-liter borosilicate, round bottom flask, with short neck and 24/40 standard taper opening, protected against implosion or breakage.

2.1.3 Flask Valve. T-bore stopcock connected to a 24/40 standard taper joint.

2.1.4 Temperature Gauge. Dial-type thermometer, or other temperature gauge, capable of measuring 1 °C (2 °F) intervals from −5 to 50 °C (25 to 125 °F).

2.1.5 Vacuum Line. Tubing capable of withstanding a vacuum of 75 mm Hg (3 in. Hg) absolute pressure, with ''T'' connection and T-bore stopcock.

2.1.6 Vacuum Gauge. U-tube manometer, 1 meter (36 in.), with 1-mm (0.1-in.) divisions, or other gauge capable of measuring pressure to within ±2.5 mm Hg (0.10 in. Hg).

2.1.7 Pump. Capable of evacuating the collection flask to a pressure equal to or less than 75 mm Hg (3 in. Hg) absolute.

2.1.8 Squeeze Bulb. One-way.

2.1.9 Volumetric Pipette. 25 ml.

2.1.10 Stopcock and Ground Joint Grease. A high-vacuum, high-temperature chlorofluorocarbon grease is required. Halocarbon 25–5S has been found to be effective.

2.1.11 Barometer. Mercury, aneroid, or other barometer capable of measuring atmospheric pressure to within 2.5 mm Hg (0.1 in. Hg). In many cases, the barometric reading may be obtained from a nearby National Weather Service station, in which case the station value (which is the absolute barometric pressure) shall be requested and an adjustment for elevation differences between the weather station and sampling point shall be applied at a rate of minus 2.5 mm Hg (0.1 in. Hg) per 30 m (100 ft) elevation increase, or vice versa for elevation decrease.

2.2 Sample Recovery. The following equipment is required for sample recovery:

2.2.1 Graduated Cylinder. 50 ml with 1-ml divisions.

2.2.2 Storage Containers. Leak-free polyethylene bottles.

2.2.3 Wash Bottle. Polyethylene or glass.

2.2.4 Glass Stirring Rod.

2.2.5 Test Paper for Indicating pH. To cover the pH range of 7 to 14.

2.3 Analysis. For the analysis, the following equipment is needed:

2.3.1 Volumetric Pipettes. Two 1 ml, two 2 ml, one 3 ml, one 4 ml, two 10 ml, and one 25 ml for each sample and standard.

2.3.2 Porcelain Evaporating Dishes. 175- to 250-ml capacity with lip for pouring, one for each sample and each standard. The Coors No. 45006 (shallow-form, 195 ml) has been found to be satisfactory. Alternatively, polymethyl pentene beakers (Nalge No. 1203, 150 ml), or glass beakers (150 ml) may be used. When glass beakers are used, etching of the beakers may cause solid matter to be present in the analytical step; the solids should be removed by filtration (see Section 4.3).

2.3.3 Steam Bath. Low-temperature ovens or thermostatically controlled hot plates kept below 70 °C (160 °F) are acceptable alternatives.

2.3.4 Dropping Pipette or Dropper. Three required.

2.3.5 Polyethylene Policeman. One for each sample and each standard.

2.3.6 Graduated Cylinder. 100 ml with 1-ml divisions.

2.3.7 Volumetric Flasks. 50 ml (one for each sample and each standard), 100 ml (one for each sample and each standard, and one for the working standard KNO_3 solution), and 1000 ml (one).

2.3.8 Spectrophotometer. To measure absorbance at 410 nm.

2.3.9 Graduated Pipette. 10 ml with 0.1-ml divisions.

2.3.10 Test Paper for Indicating pH. To cover the pH range of 7 to 14.

2.3.11 Analytical Balance. To measure to within 0.1 mg.

3. *Reagents*

Unless otherwise indicated, it is intended that all reagents conform to the specifications established by the Committee on Analytical Reagents of the American Chemical Society, where such specifications are available; otherwise, use the best available grade.

3.1 Sampling. To prepare the absorbing solution, cautiously add 2.8 ml concentrated H_2SO_4 to 1 liter of deionized, distilled water. Mix well and add 6 ml of 3 percent hydrogen peroxide, freshly prepared from 30 percent hydrogen peroxide solution. The absorbing solution should be used within 1 week of its preparation. Do not expose to extreme heat or direct sunlight.

3.2 Sample Recovery. Two reagents are required for sample recovery:

3.2.1 Sodium Hydroxide (1*N*). Dissolve 40 g NaOH in deionized, distilled water and dilute to 1 liter.

3.2.2 Water. Deionized, distilled to conform to ASTM Specification D1193–77, Type 3 (incorporated by reference—see §60.17). At the option of the analyst, the $KMnO_4$ test for oxidizable organic matter may be omitted when high concentrations of organic matter are not expected to be present.

3.3 Analysis. For the analysis, the following reagents are required:

3.3.1 Fuming Sulfuric Acid. 15 to 18 percent by weight free sulfur trioxide. HANDLE WITH CAUTION.

3.3.2 Phenol. White solid.

3.3.3 Sulfuric Acid. Concentrated, 95 percent minimum assay. HANDLE WITH CAUTION.

3.3.4 Potassium Nitrate. Dried at 105 to 110 °C (220 to 230 °F) for a minimum of 2 hours just prior to preparation of standard solution.

3.3.5 Standard KNO_3 Solution. Dissolve exactly 2.198 g of dried potassium nitrate (KNO_3) in deionized, distilled water and dilute to 1 liter with deionized, distilled water in a 1,000-ml volumetric flask.

3.3.6 Working Standard KNO_3 Solution. Dilute 10 ml of the standard solution to 100 ml with deionized distilled water. One milliter of the working standard solution is equivalent to 100 µg nitrogen dioxide (NO_2).

3.3.7 Water. Deionized, distilled as in Section 3.2.2.

3.3.8 Phenoldisulfonic Acid Solution. Dissolve 25 g of pure white phenol in 150 ml concentrated sulfuric acid on a steam bath. Cool, add 75 ml fuming sulfuric acid, and heat at 100 °C (212 °F) for 2 hours. Store in a dark, stoppered bottle.

3.3.9 Quality Assurance Audit Samples. Nitrate samples in glass vials prepared by EPA's Environmental Monitoring Systems Laboratory, Quality Assurance Division, Source Branch, Mail Drop 77A, Research Triangle Park, North Carolina 27711. Each set will consist of two vials having solutions of unknown concentrations. Only when making compliance determinations, obtain an audit sample set from the quality assurance management office at each EPA regional office or the responsible enforcement agency. (NOTE: The tester should notify the quality assurance office or the responsible enforcement agency at least 30 days prior to the test date to allow sufficient time for sample delivery.)

4. *Procedures*

4.1 Sampling.

4.1.1 Pipette 25 ml of absorbing solution into a sample flask, retaining a sufficient quantity for use in preparing the calibration standards. Insert the flask valve stopper into the flask with the valve in the ''purge'' position. Assemble the sampling train as shown in Figure 7–1 and place the probe at the sampling point. Make sure that all fitings are tight and leak-free, and that all ground glass joints have been properly greased with a high-vacuum, high-temperature chlorofluorocarbon-based stopcock grease. Turn the flask valve and the pump valve to their ''evacuate'' positions. Evacuate the flask to 75 mm Hg (3 in. Hg) absolute pressure, or less. Evacuation to a pressure approaching the vapor pressure of water at the existing temperature is desirable. Turn the pump valve to its ''vent'' position and turn the off the pump. Check for leakage by observing the manometer for any pressure fluctuation. (Any variation greater than 10 mm Hg (0.4 in. Hg) over a period of 1 minute is not acceptable, and the flask is not to be used until the leakage problem is corrected. Pressure in the flask is not to exceed 75 mm Hg (3 in. Hg) absolute at the time sampling is commenced.) Record the volume of the flask and valve (V_f), the flask temperature (T_i), and the barometric pressure. Turn the flask valve counterclockwise to its ''purge'' position and do the same with the pump valve. Purge the probe and the vacuum tube using the squeeze bulb. If condensation occurs in the probe and the flask valve area, heat the probe and purge until the condensation disappears. Next, turn the pump valve to its ''vent'' position. Turn the flask valve clockwise to its ''evacuate'' position and record the difference in the mercury levels in the manometer. The absolute internal pressure in the flask (P_i) is equal to the barometric pressure less the manometer reading. Immediately turn the flask valve to the ''sample'' position and permit the gas to enter the flask until pressures in the flask and sample line (i.e., duct, stack) are equal. This will usually require about 15 seconds; a longer period indicates a ''plug'' in the probe, which must be corrected before sampling is continued. After collecting the sample, turn the flask valve to its ''purge'' position and disconnect the flask from the sampling train. Shake the flask for at least 5 minutes.

4.1.2 If the gas being sampled contains insufficient oxygen for the conversion of NO to NO_2 (e.g., an applicable subpart of the standard may require taking a sample of a calibration gas mixture of NO in N_2), then oxygen shall be introduced into the flask to permit this conversion. Oxygen may be introduced into the flask by one of three methods; (1) Before evacuating the sampling flask, flush with pure cylinder oxygen, then evacuate flask to 75 mm Hg (3 in. Hg) absolute pressure or less; or (2) inject oxygen into the flask after sampling; or (3) terminate sampling with a minimum of 50 mm Hg (2 in. Hg) vacuum remaining in the flask, record this final pressure, and then vent the flask to the atmosphere until the flask pressure is almost equal to atmospheric pressure.

4.2 Sample Recovery. Let the flask set for a minimum of 16 hours and then shake the contents for 2 minutes. Connect the flask to a mercury filled U-tube manometer. Open the valve from the flask to the manometer and record the flask temperature (T_f), the barometric pressure, and the difference between the mercury levels in the manometer. The absolute internal pressure in the flask (P_f) is the barometric pressure less the manometer reading. Transfer the contents of the flask to a leak-free polyethylene bottle. Rinse the flask twice with 5-ml portions of deionized, distilled water and add the rinse water to the bottle. Adjust the pH to between 9 and 12 by adding sodium hydroxide (1 N), dropwise (about 25 to 35 drops). Check the pH by dipping a stirring rod into the solution and then touching the rod to the pH test paper. Remove as little material as possible during this step. Mark the height of the liquid level so that the container can be checked for leakage after transport. Label

the container to clearly identify its contents. Seal the container for shipping.

4.3 Analysis. Note the level of the liquid in container and confirm whether or not any sample was lost during shipment; note this on the analytical data sheet. If a noticeable amount of leakage has occurred, either void the sample or use methods, subject to the approval of the Administrator, to correct the final results. Immediately prior to analysis, transfer the contents of the shipping container to a 50-ml volumetric flask, and rinse the container twice with 5-ml portions of deionized, distilled water. Add the rinse water to the flask and dilute to the mark with deionized, distilled water; mix thoroughly. Pipette a 25-ml aliquot into the procelain evaporating dish. Return any unused portion of the sample to the polyethylene storage bottle. Evaporate the 25-ml aliquot to dryness on a steam bath and allow to cool. Add 2 ml phenoldisulfonic acid solution to the dried residue and triturate thoroughly with a polyethylene policeman. Make sure the solution contacts all the residue. Add 1 ml deionized, distilled water and four drops of concentrated sulfuric acid. Heat the solution on a steam bath for 3 minutes with occasional stirring. Allow the solution to cool, add 20 ml deionized, distilled water, mix well by stirring, and add concentrated ammonium hydroxide, dropwise, with constant stirring, until the pH is 10 (as determined by pH paper). If the sample contains solids, these must be removed by filtration (centrifugation is an acceptable alternative, subject to the approval of the Administrator), as follows: filter through Whatman No. 41 filter paper into a 100-ml volumetric flask; rinse the evaporating dish with three 5-ml portions of deionized, distilled water; filter these three rinses. Wash the filter with at least three 15-ml portions of deionized, distilled water. Add the filter washings to the contents of the volumetric flask and dilute to the mark with deionized, distilled water. If solids are absent, the solution can be transferred directly to the 100-ml volumetric flask and diluted to the mark with deionized, distilled water. Mix the contents of the flask thoroughly, and measure the absorbance at the optimum wavelength used for the standards (Section 5.2.1), using the blank solution as a zero reference. Dilute the sample and the blank with equal volumes of deionized, distilled water if the absorbance exceeds A_4, the absorbance of the 400 μg NO_2 standard (see Section 5.2.2).

4.4 Audit Sample Analysis. Concurrently analyze the two audit samples and a set of compliance samples (Section 4.3) in the same manner to evaluate the technique of the analyst and the standards preparation. (NOTE: It is recommended that known quality control samples be analyzed prior to the compliance and audit sample analysis to optimize the system accuracy and precision. One source of these samples is the Source Branch listed in Section 3.3.9.) The same analysts, analytical reagents, and analytical system shall be used both for the compliance samples and the EPA audit samples; if this condition is met, auditing of subsequent compliance analyses for the same enforcement agency within 30 days is not required. An audit sample set may not be used to validate different sets of compliance samples under the jurisdiction of different enforcement agencies, unless prior arrangements are made with both enforcement agencies.

Calculate the concentrations in mg/dscm using the specified sample volume in the audit instructions. (NOTE: Indication of acceptable results may be obtained immediately by reporting the audit results in mg/dscm and compliance results in total μg NO_2/sample by telephone to the responsible enforcement agency.) Include the results of both audit samples, their identification numbers, and the analyst's name with the results of the compliance determination samples in appropriate reports to the EPA regional office or the appropriate enforcement agency. Include this information with subsequent compliance analyses for the same enforcement agency during the 30-day period.

The concentrations of the audit samples obtained by the analyst shall agree within 10 percent of the actual audit concentrations. If the 10-percent specification is not met, reanalyze the compliance samples and audit samples and include initial and reanalysis values in the test report (see NOTE in the first paragraph of this section).

Failure to meet the 10-percent specification may require retests until the audit problems are resolved. However, it the audit results do not affect the compliance or noncompliance status of the affected facility, the Administrator may waive the reanalysis requirement, further audits, or retests and accept the results of the compliance test. While steps are being taken to resolve audit analysis problems, the Administrator may also choose to use the data to determine the compliance or noncompliance status of the affected facility.

5. *Calibration*

5.1 Flask Volume. The volume of the collection flask-flask valve combination must be known prior to sampling. Assemble the flask and flask valve and fill with water, to the stopcock. Measure the volume of water to ±10 ml. Record this volume on the flask.

5.2 Spectrophotometer Calibration.

5.2.1 Optimum Wavelength Determination. Calibrate the wavelength scale of the spectrophotometer every 6 months. The calibration may be accomplished by using an energy source with an intense line emission such as a mercury lamp, or by using a series of glass filters spanning the measuring range

of the spectrophotometer. Calibration materials are available commercially and from the National Bureau of Standards. Specific details on the use of such materials should be supplied by the vendor; general information about calibration techniques can be obtained from general reference books on analytical chemistry. The wavelength scale of the spectrophotometer must read correctly within ±5 nm at all calibration points; otherwise, the spectrophotometer shall be repaired and recalibrated. Once the wavelength scale of the spectrophotometer is in proper calibration, use 410 nm as the optimum wavelength for the measurement of the absorbance of the standards and samples.

Alternatively, a scanning procedure may be employed to determine the proper measuring wavelength. If the instrument is a double-beam spectrophotometer, scan the spectrum between 400 and 415 nm using a 200 μg NO_2 standard solution in the sample cell and a blank solution in the reference cell. If a peak does not occur, the spectrophotometer is probably malfunctioning and should be repaired. When a peak is obtained within the 400 to 415 nm range, the wavelength at which this peak occurs shall be the optimum wavelength for the measurement of absorbance of both the standards and the samples. For a single-beam spectrophotometer, follow the scanning procedure described above, except that the blank and standard solutions shall be scanned separately. The optimum wavelength shall be the wavelength at which the maximum difference in absorbance between the standard and the blank occurs.

5.2.2 Determination of Spectrophotometer Calibration Factor K_c. Add 0.0 ml, 2 ml, 4 ml, 6 ml., and 8 ml of the KNO_3 working standard solution (1 ml=100 μg NO_2) to a series of five 50-ml volumetric flasks. To each flask, add 25 ml of absorbing solution, 10 ml deionized, distilled water, and sodium hydroxide (1 N) dropwise until the pH is between 9 and 12 (about 25 to 35 drops each). Dilute to the mark with deionized, distilled water. Mix thoroughly and pipette a 25-ml aliquot of each solution into a separate porcelain evaporating dish. Beginning with the evaporation step, follow the analysis procedure of Section 4.3 until the solution has been transferred to the 100 ml volumetric flask and diluted to the mark. Measure the absorbance of each solution, at the optimum wavelength, as determined in Section 5.2.1. This calibration procedure must be repeated on each day that samples are analyzed. Calculate the spectrophotometer calibration factor as follows:

$$K_c = 100\,\frac{A_1 + 2A_2 + 3A_3 + 4A_4}{A_1^{\,2} + A_2^{\,2} + A_3^{\,2} + A_4^{\,2}} \qquad \text{Eq. 7-1}$$

Where:

K_c=Calibration factor, μg.

A_1=Absorbance of the 100-μg NO_2 standard.
A_2=Absorbance of the 200-μg NO_2 standard.
A_3=Absorbance of the 300-μg NO_2 standard.
A_4=Absorbance of the 400-μg NO_2 standard.

5.2.3 Spectrophotometer Calibration Quality Control. Multiply the absorbance value obtained for each standard by the K_c factor (least squares slope) to determine the distance each calibration point lies from the theoretical calibration line. These calculated concentration values should not differ from the actual concentrations (i.e., 100, 200, 300, and 400 μg NO_2) by more than 7 percent for three of the four standards.

5.3 Barometer. Calibrate against a mercury barometer.

5.4 Temperature Gauge. Calibrate dial thermometers against mercury-in-glass thermometers.

5.5 Vacuum Gauge. Calibrate mechanical gauges, if used, against a mercury manometer such as that specified in 2.1.6.

5.6 Analytical Balance. Calibrate against standard weights.

6. *Calculations*

Carry out the calculations, retaining at least one extra decimal figure beyond that of the acquired data. Round off figures after final calculations.

6.1 Nomenclature.

A=Absorbance of sample.
C=Concentration of NO_x as NO_2, dry basis, corrected to standard conditions, mg/dscm (lb/dscf).
F=Dilution factor (i.e., 25/5, 25/10, etc., required only if sample dilution was needed to reduce the absorbance into the range of calibration).
K_c=Spectrophotometer calibration factor.
m=Mass of NO_x as NO_2 in gas sample, μg.
P_f=Final absolute pressure of flask, mm Hg (in. Hg).
P_i=Initial absolute pressure of flask, mm Hg (in. Hg).
P_{std}=Standard absolute pressure, 760 mm Hg (29.92 in. Hg).
T_f=Final absolute temperature of flask, °K (°R).
T_i=Initial absolute temperature of flask, °K (°R).
T_{std}=Standard absolute temperature 293°K (528°R).
V_{sc}=Sample volume at standard conditions (dry basis), ml.
V_f=Volume of flask and valve, ml.
V_a=Volume of absorbing solution, 25 ml.
2=50/25, the aliquot factor. (If other than a 25-ml aliquot was used for analysis, the corresponding factor must be substituted).

6.2 Sample Volume, Dry Basis, Corrected to Standard Conditions.

$$V_{sc} = (T_{std}/P_{std})(V_f - V_a)(P_f/T_f - P_i/T_i)$$
$$= K_1\,(V_f - 25\text{ ml})(P_f/T_f - P_i/T_i) \qquad \text{Eq. 7–2}$$

Where:

K_1=0.3858°K/mm Hg for metric units
=17.64 °R/in. Hg for English units.

6.3 Total μg NO_2 Per Sample.

$m = 2K_c A F$ Eq. 7–3

NOTE: If other than a 25-ml aliquot is used for analysis, the factor 2 must be replaced by a corresponding factor.

6.4 Sample Concentration, Dry Basis, Corrected to Standard Conditions.

$$C = K_2 \frac{m}{V_{sc}}$$

Equation 7–4

Where:

$K_2 = 10^3$ (mg/scm)/(μg/ml) for metric units.

$= 6.242 \times 10^{-5}$ (lb/scf)/(μg/ml) for English units.

To convert from mg/dscm to g/dscm, divide C by 1,000.

6.5 Relative Error (RE) for QA Audit Samples, Percent.

$$RE = \frac{C_d - C_a}{C_a}(100) \qquad \text{Eq. 7-5}$$

Where:

C_d=Determined audit sample concentration, mg/dscm.

C_a=Actual audit sample concentration, mg/dscm.

7. *Bibliography*

1. Standard Methods of Chemical Analysis 6th ed. New York, D. Van Nostrand Co., Inc. 1962. Vol. 1, p. 329–330.

2. Standard Method of Test for Oxides of Nitrogen in Gaseous Combustion Products (Phenoldisulfonic Acid Procedure). In: 1968 Book of ASTM Standards, Part 26. Philadelphia, PA. 1968. ASTM Designation D–1608–60, p. 725–729.

3. Jacob, M. B. The Chemical Analysis of Air Pollutants. New York. Interscience Publisher, Inc. 1960. Vol. 10, p. 351–356.

4. Beatty, R. L., L. B. Berger, and H. H. Schrenk. Determination of Oxides of Nitrogen by the Phenoldisulfonic Acid Method. Bureau of Mines, U.S. Dept. of Interior. RI. 3687. February 1943.

5. Hamil, H. F. and D. E. Camann. Collaborative Study of Method for the Determination of Nitrogen Oxide Emissions from Stationary Sources (Fossil Fuel-Fired Steam Generators). Southwest Research Institute report for Environmental Protection Agency. Research Triangle Park, NC. October 5, 1973.

6. Hamil, H. F. and R. E. Thomas. Collaborative Study of Method for the Determination of Nitrogen Oxide Emissions from Stationary Sources (Nitric Acid Plants). Southwest Research Institute report for Environmental Protection Agency. Research Triangle Park, NC. May 8, 1974.

METHOD 7A—DETERMINATION OF NITROGEN OXIDE EMISSIONS FROM STATIONARY SOURCES—ION CHROMATOGRAPHIC METHOD

1. *Applicability and Principle*

1.1 Applicability. This method applies to the measurement of nitrogen oxides emitted from stationary sources; it may be used as an alternative to Method 7 (as defined in 40 CFR Part 60.8(b)) to determine compliance if the stack concentration is within the analytical range. The analytical range of the method is from 125 to 1,250 mg NO_x/m^3 as NO_2 (65 to 655 ppm), and higher concentrations may be analyzed by diluting the sample. The lower detection limit is approximately 19 mg/m^3 (10 ppm), but may vary among instruments.

1.2 Principle. A grab sample is collected in an evacuated flask containing a diluted sulfuric acid-hydrogen peroxide absorbing solution. The nitrogen oxides, except nitrous oxide, are oxidized to nitrate and measured by ion chromatography.

2. *Apparatus*

2.1 Sampling. Same as in Method 7, Section 2.1.

2.2 Sampling Recovery. Same as in Method 7, Section 2.2, except the stirring rod and pH paper are not needed.

2.3 Analysis. For the analysis, the following equipment is needed. Alternative instrumentation and procedures will be allowed provided the calibration precision in Section 5.2 and acceptable audit accuracy can be met.

2.3.1 Volumetric Pipets. Class A; 1-, 2-, 4-, 5-ml (two for the set of standards and one per sample), 6-, 10-, and graduated 5-ml sizes.

2.3.2 Volumetric Flasks. 50–ml (two per sample and one per standard), 200-ml, and 1-liter sizes.

2.3.3 Analytical Balance. To measure to within 0.1 mg.

2.3.4 Ion Chromatograph. The ion chromatograph should have at least the following components:

2.3.4.1 Columns. An anion separation or other column capable of resolving the nitrate ion from sulfate and other species present and a standard anion suppressor column (optional). Suppressor columns are produced as proprietary items; however, one can be produced in the laboratory using the resin available from BioRad Company, 32nd and Griffin Streets, Richmond, CA. Peak resolution can be optimized by varying the efluent strength or column flow rate, or by experimenting with alternative columns that may offer more efficient separation. When using guard columns with the stronger reagent to protect the separation column, the analyst should allow rest periods between injection intervals to purge possible sulfate buildup in the guard column.

2.3.4.2 Pump. Capable of maintaining a steady flow as required by the system.

2.3.4.3 Flow Gauges. Capable of measuring the specified system flow rate.

2.3.4.4 Conductivity Detector.

2.3.4.5 Recorder. Compatible with the output voltage range of the detector.

3. *Reagents*

Unless otherwise indicated, it is intended that all reagents conform to the specifications established by the Committee on Analytical Reagents of the American Chemical Society, where such specifications are available; otherwise, use the best available grade.

3.1 Sampling. An absorbing solution consisting of sulfuric acid (H_2SO_4) and hydrogen peroxide (H_2O_2) is required for sampling. To prepare the absorbing solution, cautiously add 2.8 ml concentrated H_2SO_4 to a 1-liter flask containing water (same as Section 3.2). Add 6 ml of 3 percent H_2O_2 that has been freshly prepared from 30 percent solution. Dilute to volume with water, and mix well. This absorbing solution should be used within 1 week of its preparation. Do not expose to extreme heat or direct sunlight.

NOTE: Biased testing results have been observed when sampling under conditions of high sulfur dioxide concentrations (above 2000 ppm).

3.2 Sample Recovery. Deionized distilled water that conforms to American Society for Testing and Materials Specification D 1193–74, Type 3, is required for sample recovery. At the option of the analyst, the $KMnO_4$ test for oxidizable organic matter may be omitted when high concentrations of organic matter are not expected to be present.

3.3 Analysis. For the analysis, the following reagents are required:

3.3.1 Water. Same as in Section 3.2.

3.3.2 Stock Standard Solution, 1 mg NO_2/ml. Dry an adequate amount of sodium nitrate ($NaNO_3$) at 105 to 110½ C for a minimum of 2 hours just before preparing the standard solution. Then dissolve exactly 1.847 g of dried $NaNO_3$ in water, and dilute to 1 liter in a volumetric flask. Mix well. This solution is stable for 1 month and should not be used beyond this time.

3.3.3 Working Standard Solution, 25µg/ml. Dilute 5 ml of the standard solution to 200 ml with water in a volumetric flask, and mix well.

3.3.4 Eluent Solution. Weight 1.018 g of sodium carbonate (Na_2CO_3) and 1.008 g of sodium bicarbonate ($NaHCO_3$), and dissolve in 4 liters of water. This solution is 0.0024 M Na_2CO_3/0.003 M $NaHCO_3$. Other eluents appropriate to the column type and capable of resolving nitrate ion from sulfate and other species present may be used.

3.3.5 Quality Assurance Audit Samples. Same as required in Method 7.

4. *Procedure*

4.1 Sampling. Same as in Method 7, Section 4.1.

4.2 Sample Recovery. Same as in Method 7, Section 4.2, except delete the steps on adjusting and checking the pH of the sample. Do not store the samples more than 4 days between collection and recovery.

4.3 Sample. Preparation. the level of the liquid in the container and confirm whether any sample was lost during shipment; note this on the analytical data sheet. If a noticeable amount of leakage has occurred, either void the sample or use methods, subject to the approval of the Administrator, to correct the final results. Immediately before analysis, transfer the contents of the shipping container to a 50-ml volumetric flask, and rinse the container twice with 5-ml portions of water. Add the rinse water to the flask, and dilute to the mark with water. Mix thoroughly.

Pipet a 5-ml aliquot of the sample into a 50-ml volumetric flask, and dilute to the mark with water. Mix thoroughly. For each set of determinations, prepare a reagent blank by diluting 5 ml of absorbing solution to 50 ml with water. (Alternatively, eluent solution may be used in all sample, standard, and blank dilutions.)

4.4 Analysis. Prepare a standard calibration curve according to Section 5.2. Analyze the set of standards followed by the set of samples using the same injection volume for both standards and samples. Repeat this analysis sequence followed by a final analysis of the standard set. Average the results. The two sample values must agree within 5 percent of their mean for the analysis to be valid. Perform this duplicate analysis sequence on the same day. Dilute any sample and the blank with equal volumes of water if the concentration exceeds that of the highest standard.

Document each sample chromatogram by listing the following analytical parameters: injection point, injection volume, nitrate and sulfate retention times, flow rate, detector sensitivity setting, and recorder chart speed.

4.5 Audit Sample Analysis. Same as required in Method 7.

5. *Calibration*

5.1 Flask Volume. Same as in Method 7, Section 5.1.

5.2 Standard Calibration Curve. Prepare a series of five standards by adding 1.0, 2.0, 4.0, 6.0, and 10.0 ml of working standard solution (25µg/ml) to a series of five 50-ml volumetric flasks. (The standard masses will equal 25, 50, 100, 150, and 250µg.) Dilute each flask to volume with water, and mix well. Analyze with the samples as described in Section 4.4 and subtract the blank from each value. Prepare or calculate a linear regression plot to the standard masses in µg (x-axis) versus their peak height responses in millimeters (y-axis). (Take peak height measurements with symmetrical peaks; in all other cases,

calculate peak areas.) From this curve, or equation, determine the slope, and calculate its reciprocal to denote as the calibration factor, S. If any point deviates from the line by more than 7 percent of the concentration at that point, remake and reanalyze that standard. This deviation can be determined by multiplying S times the peak height response for each standard. The resultant concentrations must not differ by more than 7 percent from each known standard mass (i.e., 25, 50, 100, 150, and 250μg).

5.3 Conductivity Detector. Calibrate according to manufacturer's specifications prior to initial use.

5.4 Barometer. Calibrate against a mercury barometer.

5.5 Temperature Gauge. Calibrate dial thermometers against mercury-in-glass thermometers.

5.6 Vacuum Gauge. Calibrate mechanical gauges, if used, against a mercury manometer such as that specified in Section 2.1.6 of Method 7.

5.7 Analytical Balance. Calibrate against standard weights.

6. *Calculations*

Carry out the calculations, retaining at least one extra decimal figure beyond that of the acquired data. Round off figures after final calculations.

6.1 Sample Volume. Calculate the sample volume V_{sc} (in ml) on a dry basis, corrected to standard conditions, using Equation 7–2 of Method 7.

6.2 Sample Concentration of NO_x as NO_2. Calculate the sample concentration C (in mg/dscm) as follows:

$$C = \frac{HSF \times 10^4}{V_{sc}} \qquad \text{Eq. 7A-1}$$

Where:

H =Sample peak height, mm.
S =Calibration factor, μg/mm.
F =Dilution factor (required only if sample dilution was needed to reduce the concentration into the range of calibration)
10^4 = 1:10 dilution times conversion factor of

$$\frac{mg}{10^3 \mu g} \times \frac{10^6 ml}{m^3}$$

To convert from mg/dscm to g/dscm, divide C by 1000.

If desired, the concentration of NO_2 may be calculated as ppm NO_2 at standard conditions as follows:

$$ppm\ NO_2 = 0.5228\ C \qquad \text{Eq. 7A-2}$$

Where:

0.5228 = ml/mg NO_2.

7. *Bibliography*

1. Mulik, J. D. and E. Sawicki. Ion Chromatographic Analysis of Environmental Pollutants. Ann Arbor, Ann Arbor Science Publishers, Inc. Vol. 2, 1979.

2. Sawicki, E., J. D. Mulik, and E. Wittgenstein. Ion Chromatographic Analysis of Environmental Pollutants. Ann Arbor, Ann Arbor Science Publishers, Inc. Vol. 1. 1978.

3. Siemer, D. D. Separation of Chloride and Bromide from Complex Matrices Prior to Ion Chromatographic Determination. Analytical Chemistry 52(12:1874–1877). October 1980.

4. Small, H., T. S. Stevens, and W. C. Bauman. Novel Ion Exchange Chromatographic Method Using Conductimetric Determination. Analytical Chemistry. 47(11:1801). 1975.

5. Yu, King K. and Peter R. Westlin. Evaluation of Reference Method 7 Flask Reaction Time. Source Evaluation Society Newsletter. *4*(4). November 1979. 10 p.

METHOD 7B—DETERMINATION OF NITROGEN OXIDE EMISSIONS FROM STATIONARY SOURCES (ULTRAVIOLET SPECTROPHOTOMETRY)

1. *Applicability and Principle*

1.1 Applicability. This method is applicable to the measurement of nitrogen oxides emitted from nitric acid plants. The range of the method as outlined has been determined to be 57 to 1,500 milligrams NO_x (as NO_2) per dry standard cubic meter, or 30 to 786 ppm NO_x (as NO_2), assuming corresponding standards are prepared.

1.2 Principle. A grab sample is collected in an evacuated flask containing a dilute sulfuric acid-hydrogen peroxide absorbing solution; and the nitrogen oxides, except nitrous oxide, are measured by ultraviolet absorption.

2. *Apparatus*

2.1 Sampling. Same as Method 7, Section 2.1.1 through Section 2.1.11.

2.2 Sample Recovery. The following equipment is required for sample recovery:

2.2.1 Wash Bottle. Polyethylene or glass.

2.2.2 Volumetric Flasks. 100-ml (one for each sample).

2.3 Analysis. The following equipment is needed for analysis:

2.3.1 Volumetric Pipettes. 5-, 10-, 15-, and 20-ml to make standards and sample dilutions.

2.3.2 Volumetric Flasks. 1000- and 100-ml for preparing standards and dilution of samples.

2.3.3 Spectrophotometer. To measure ultraviolet absorbance at 210 nm.

2.3.4 Analytical Balance. To measure to within 0.1 mg.

3. *Reagents*

Unless otherwise indicated, all reagents are to conform to the specifications established by the committee on analytical reagents of the American Chemical Society, where such specifications are available. Otherwise, use the best available grade.

3.1 Sampling. Same as Method 7, Section 3.1. It is important that the amount of hydrogen peroxide in the absorbing solution not be increased. Higher concentrations of peroxide may interfere with sample analysis.

3.2 Sample Recovery. Same as for Method 7, Section 3.2.2.

3.3 Analysis. Same as for Method 7, Sections 3.3.4, 3.3.5, and 3.3.7 with the addition of the following:

3.3.1 Working Standard KNO_3 Solution. Dilute 10 ml of the standard solution to 1000 ml with water. One milliliter of the working standard is equivalent to 10 µg nitrogen dioxide (NO_2).

3.3.2 Absorbing Solution. Same as in Section 3.1.

3.3.3 Quality Assurance Audit Samples. Nitrate samples are prepared in glass vials by the Environmental Protection Agency (EPA), Environmental Monitoring Systems Laboratory, Research Triangle Park, North Carolina. Each set will consist of two vials with two unknown concentrations. When making compliance determinations, obtain the audit samples from the quality assurance management office at each EPA regional office.

4. *Procedures*

4.1 Sampling. Same as Method 7, Sections 4.1.1 and 4.1.2.

4.2 Sample Recovery. Let the flask sit for a minimum of 16 hours, and then shake the contents for 2 minutes. Connect the flask to a mercury filled U-tube manometer. Open the valve from the flask to the manometer, and record the flask temperature (T_f), the barometric pressure, and the difference between the mercury levels in the manometer. The absolute internal pressure in the flask (P_f) is the barometric pressure less the manometer reading.

Transfer the contents of the flask to a 100-ml volumetric flask. Rinse the flask three times with 10-ml portions of water, and add to the volumetric flask. Dilute to 100 ml with water. Mix thoroughly. The sample is now ready for analysis.

4.3 Analysis. Pipette a 20-ml aliquot of sample into a 100-ml volumetric flask. Dilute to 100 ml with water. The sample is now ready to be read by ultraviolet spectrophotometry. Using the blank as zero reference, read the absorbance of the sample at 210 nm.

4.4 Audit Analysis. With each set of compliance samples or once per analysis day, or once per week when averaging continuous samples, analyze each performance audit in the same manner as the sample to evaluate the analyst's technique and standard preparation. The same person, the same reagents, and the same analytical system must be used both for compliance determination samples and the EPA audit samples. Report the results of all audit samples with the results of the compliance determination samples. The relative error will be determined by the regional office or the appropriate enforcement agency.

5. *Calibration*

Same as Method 7, Section 5.1 and Sections 5.3 through 5.6 with the addition of the following:

5.1 Determination of Spectrophotometer Standard Curve. Add 0.0 ml, 5 ml, 10 ml, 15 ml, and 20 ml of the KNO_3 working standard solution (1 ml= 10 µg NO_2) to a series to five 100-ml volumetric flasks. To each flask, add 5 ml of absorbing solution. Dilute to the mark with water. The resulting solutions contain 0.0, 50, 100, 150, and 200 µg NO_2, respectively. Measure the absorbance by ultraviolet spectrophotometry at 210 nm, using the blank as a zero reference. Prepare a standard curve plotting absorbance vs. µg NO_2.

NOTE: If other than a 20-ml aliquot of sample is used for analysis, then the amount of absorbing solution in the blank and standards must be adjusted such that the same amount of absorbing solution is in the blank and standards as is in the aliquot of sample used. Calculate the spectrophotometer calibration factor K_c as follows:

$$K_c = \frac{\sum_{i=1}^{n} M_i A_i}{\sum_{i=1}^{n} A_i^2} \qquad \text{Eq. 7B-1}$$

Where:

m_i=Mass of NO_2 in standard i, µg.

A_i=Absorbance of NO_2 standard i.

N=Total number of calibration standards.

For the set of calibration standards specified here, Equation 7–1 simplifies to the following:

$$K_c = 50\frac{A_1 + 2A_2 + 3A_3 + 4A_4}{A_1^2 + A_2^2 + A_3^2 + A_4^2} \qquad \text{Eq. 7B-2}$$

6. *Calculations*

Same as Method 7, Sections 6.1, 6.2, and 6.4 with the addition of the following:

6.1 Total µg NO_2 Per Sample:

$$m = 5K_c A F \qquad \text{Eq. 7B–3}$$

Where:

5=100/20, the aliquot factor.

NOTE: If other than a 20-ml aliquot is used for analysis, the factor 5 must be replaced by a corresponding factor.

6.2 Relative Error (RE) for Quality Assurance Audits.

$$RE = \frac{C_d \circ C_a}{C_a} \times 100 \qquad \text{Eq. 7B-4}$$

Where:

C_d=Determined audit concentration.
C_a=Actual audit concentration.

7. *Bibliography*

1. National Institute for Occupational Safety and Health Recommendations for Occupational Exposure to Nitric Acid. In: Occupational Safety and Health Reporter. Washington, DC. Bureau of National Affairs, Inc. 1976. p. 149.

2. Rennie, P.J., A.M. Sumner, and F.B. Basketter. ''Determination of Nitrate in Raw, Potable, and Waste Waters by Ultraviolet Spectrophotometry.'' ''Analyst.'' Vol. 104. September 1979. p. 837.

METHOD 7C—DETERMINATION OF NITROGEN OXIDE EMISSIONS FROM STATIONARY SOURCES—ALKALINE-PERMANGANATE/COLORIMETRIC METHOD

1. *Applicability, Principle, Interferences, Precision, Bias, and Stability*

1.1 Applicability. The method is applicable to the determination of NO_x emissions from fossil-fuel fired steam generators, electric utility plants, nitric acid plants, or other sources as specified in the regulations. The lower detectable limit is 13 mg NO_x/m^3, as NO_2 (7 ppm NO_x) when sampling at 500 cc/min for 1 hour. No upper limit has been established; however, when using the recommended sampling conditions, the method has been found to collect NO_x emissions quantitatively up to 1,782 mg NO_x/m^3, as NO_2 (932 ppm NO_x).

1.2 Principle. An integrated gas sample is extracted from the stack and collected in alkaline-potassium permanganate solution; NO_x ($NO+NO_2$) emissions are oxidized to NO_2– and NO_3–. The NO_3– is reduced to NO_2– with cadmium, and the NO_2– is analyzed colorimetrically.

1.3 Interferences. Possible interferences are SO_2 and NH_3. High concentrations of SO_2 could interfere because SO_2 consumes MnO_4– (as does NO_x) and, therefore, could reduce the NO_x collection efficiency. However, when sampling emissions from a coal-fired electric utility plant burning 2.1-percent sulfur coal with no control of SO_2 emissions, collection efficiency was not reduced. In fact, calculations show that sampling 3000 ppm SO_2 will reduce the MnO_4– concentration by only 5 percent if all the SO_2 is consumed in the first impinger.

NH_3 is slowly oxidized to NO_3– by the absorbing solution. At 100 ppm NH_3 in the gas stream, an interference of 6 ppm NO_x (11 mg NO_2/m^3) was observed when the sample was analyzed 10 days after collection. Therefore, the method may not be applicable to plants using NH_3 injection to control NO_x emissions unless means are taken to correct the results. An equation has been developed to allow quantitation of the interference and is discussed in Citation 5 of the Bibliography.

1.4 Precision and Bias. The method does not exhibit any bias relative to Method 7. The within-laboratory relative standard deviation for a single measurement is 2.8 and 2.9 percent at 201 and 268 ppm NO_x, respectively.

1.5 Stability. Collected samples are stable for at least 4 weeks.

2. *Apparatus*

2.1 Sampling and Sample Recovery. The sampling train is shown in Figure 7C–1, and component parts are discussed below. Alternative apparatus and procedures are allowed provided acceptable accuracy and precision can be demonstrated.

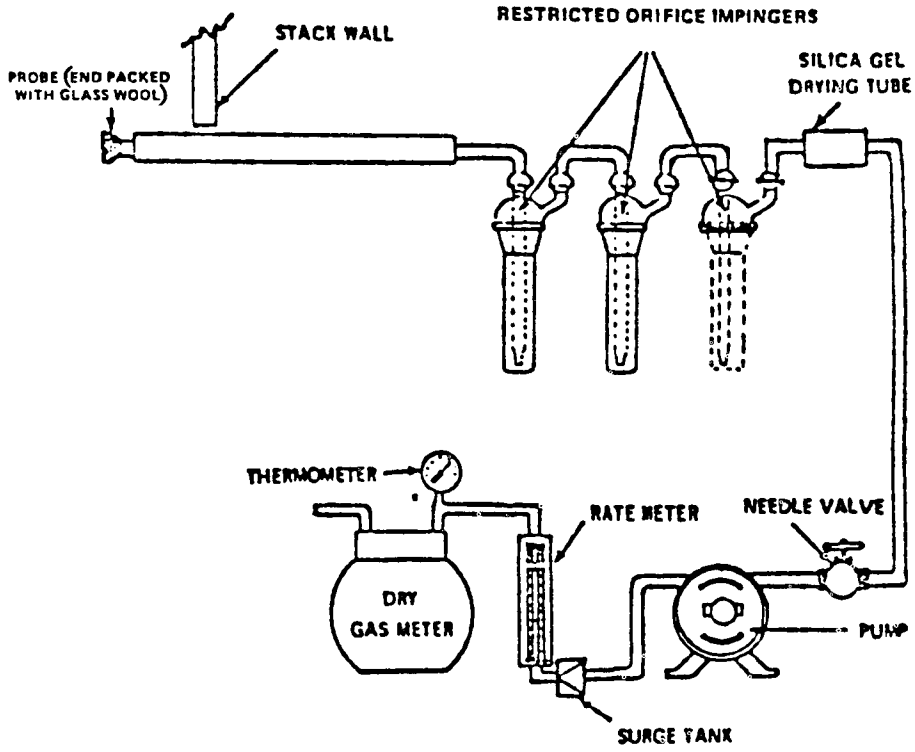

Figure 7C-1. NO_x sampling train.

2.1.1 Probe. Borosilicate glass tubing, sufficiently heated to prevent water condensation and equipped with an in-stack or out-stack filter to remove particulate matter (a plug of glass wool is satisfactory for this purpose). Stainless steel or Teflon tubing may also be used for the probe. (Note: Mention of trade names or specific products does not constitute endorsement by the U.S. Environmental Protection Agency.)

2.1.2 Impingers. Three restricted-orifice glass impingers, having the specifications given in Figure 7C–2, are required for each sampling train. The impingers must be connected in series with leak-free glass connectors. Stopcock grease may be used, if necessary, to prevent leakage. (The impingers can be fabricated by a glass blower until they become available commercially.)

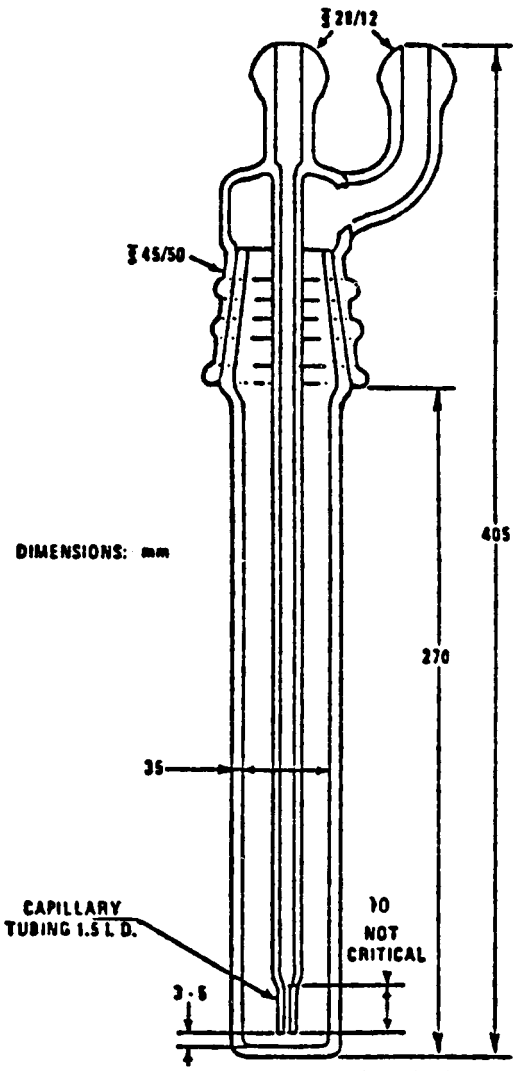

Figure 7C-2. Restricted orifice impinger.

2.1.3 Glass Wool, Stopcock Grease, Drying Tube, Valve, Pump, Barometer, and Vacuum Gauge and Rotameter. Same as in Method 6, Sections 2.1.3, 2.1.4, 2.1.6, 2.1.7, 2.1.8, 2.1.11, and 2.1.12, respectively.

2.1.4 Rate Meter. Rotameter, or equivalent, accurate to within 2 percent at the selected flow rate between 400 and 500 cc/min. For rotameters, a range of 0 to 1 liter/min is recommended.

2.1.5 Volume Meter. Dry gas meter capable of measuring the sample volume, under the sampling conditions of 400 to 500 cc/min for 60 minutes within an accuracy of 2 percent.

2.1.6 Filter. To remove NO_x from ambient air, prepared by adding 20 g of a 5-angstrom molecular sieve to a cylindrical tube, e.g., a polyethylene drying tube.

2.1.7 Polyethylene Bottles. 1-liter, for sample recovery.

2.1.8 Funnel and Stirring Rods. For sample recovery.

2.2 Sample Preparation and Analysis.

2.2.1 Hot Plate. Stirring type with 50- by 10-mm Teflon-coated stirring bars.

2.2.2 Beakers. 400-, 600-, and 1000-ml capacities.

2.2.3 Filtering Flask. 500-ml capacity with side arm.

2.2.4 Buchner Funnel. 75-mm ID, with spout equipped with a 13-mm ID by 90-mm long piece of Teflon tubing to minimize possibility of aspirating sample solution during filtration.

2.2.5 Filter Paper. Whatman GF/C, 7.0-cm diameter.

2.2.6 Stirring Rods.

2.2.7 Volumetric Flasks. 100-, 200- or 250-, 500-, and 1000-ml capacity.

2.2.8 Watch Glasses. To cover 600- and 1,000-ml beakers.

2.2.9 Graduated Cylinders. 50- and 250-ml capacities.

2.2.10 Pipettes. Class A

2.2.11 pH Meter. To measure pH from 0.5 to 12.0

2.2.12 Burette. 50-ml with a micrometer type stopcock. (The stopcock is Catalogue No. 8225–t–05, Ace Glass, Inc., Post Office Box 996, Louisville, Kentucky 50201.) Place a glass wool plug in bottom of burette. Cut off burette at a height of 43 cm from the top of plug, and have a glass blower attach a glass funnel to top of burette such that the diameter of the burette remains essentially unchanged. Other means of attaching the funnel are acceptable.

2.2.13 Glass Funnel. 75-mm ID at the top.

2.2.14 Spectrophotometer. Capable of measuring absorbance at 540 nm. One-cm cells are adequate.

2.2.15 Metal Thermometers. Bimetallic thermometers, range 0 to 150½ C.

2.2.16 Culture Tubes. 20- by 150-mm, Kimax No. 45048.

2.2.17 Parafilm ''M.'' Obtained from American Can Company, Greenwich, Connecticut 06830.

2.2.18 CO_2 Measurement Equipment. Same as in Method 3.

3. *Reagents*

Unless otherwise indicated, all reagents should conform to the specifications established by the Committee on Analytical Reagents of the American Chemical Society, where such specifications are available; otherwise, use the best available grade.

3.1 Sampling.

3.1.1 Water. Deionized distilled to conform to ASTM Specification D 1193–74, Type 3 (incorporated by reference—see §60.17).

3.1.2 Potassium Permanganate, 4.0 percent (w/w), Sodium Hydroxide, 2.0 percent (w/w). Dissolve 40.0 g of $KMnO_4$ and 20.0 g of NaOH in 940 ml of water.

3.2 Sample Preparation and Analysis.

3.2.1 Water. Same as in Section 3.1.1.

3.2.2 Sulfuric Acid. Concentrated H_2SO_4.

3.2.3 Oxalic Acid Solution. Dissolve 48 g of oxalic acid $[(COOH)_2 \bullet 2H_2O]$ in water, and dilute to 500 ml. Do not heat the solution.

3.2.4 Sodium Hydroxide, 0.5 N. Dissolve 20 g of NaOH in water, and dilute to 1 liter.

3.2.5 Sodium Hydroxide, 10 N. Dissolve 40 g of NaOH in water and dilute to 100 ml.

3.2.6 Ethylenediamine Tetraacetic Acid (EDTA) Solution, 6.5 Percent. Dissolve 6.5 g of EDTA (disodium salt) in water, and dilute to 100 ml. Solution is best accomplished by using a magnetic stirrer.

3.2.7 Column Rinse Solution. Add 20 ml of 6.5 percent EDTA solution to 960 ml of water, and adjust the pH to 11.7 to 12.0 with 0.5 N NaOH.

3.2.8 Hydrochloric Acid (HCl), 2 N. Add 86 ml of concentrated HCl to a 500-ml volumetric flask containing water, dilute to volume, and mix well. Store in a glass-stoppered bottle.

3.2.9 Sulfanilamide Solution. Add 20 g of sulfanilamide (melting point 165 to 167 °C) to 700 ml of water. Add, with mixing, 50 ml concentrated phosphoric acid (85 percent), and dilute to 1000 ml. This solution is stable for at least 1 month, if refrigerated.

3.2.10 N-(1-Naphthyl)-Ethylenediamine Dihydrochloride (NEDA) Solution. Dissolve 0.5 g of NEDA in 500 ml of water. An aqueous solution should have one absorption peak at 320 nm over the range of 260 to 400 nm. NEDA, showing more than one absorption peak over this range, is impure and should not be used. This solution is stable for at least 1 month if protected from light and refrigerated.

3.2.11 Cadmium. Obtained from Matheson Coleman and Bell, 2909 Highland Avenue, Norwood, Ohio 45212, as EM Laboratories Catalogue No. 2001. Prepare by rinsing in 2 N HCl for 5 minutes until the color is silver-grey. Then rinse the cadmium with water until the rinsings are neutral when tested with pH paper. CAUTION: H_2 is liberated during preparation. Prepare in an exhaust hood away from any flame.

3.2.12 $NaNO_2$ Standard Solution, Nominal Concentration, 1000 µg NO_2–/ml. Desiccate $NaNO_2$ overnight. Accurately weigh 1.4 to 1.6 g of $NaNO_2$ (assay of 97 percent $NaNO_2$ or greater), dissolve in water, and dilute to 1 liter. Calculate the exact NO_2– concentration from the following relationship:

$$\mu g NO_2 - /ml = g \text{ of } NaNO_2 \times \frac{\text{purity, \%}}{100} \times 10^3 \times \frac{46.01}{69.01}$$

This solution is stable for at least 6 months under laboratory conditions.

3.2.13 KNO_3 Standard Solution. Dry KNO_3 at 110 °C for 2 hours, and cool in a desiccator. Accurately weigh 9 to 10 g of KNO_3 to within 0.1 mg, dissolve in water, and dilute to 1 liter. Calculate the exact NO_3– concentration from the following relationship:

$$\mu g NO_{3^-}/ml = g \text{ of } KNO_3 \times 10^3 \times \frac{62.01}{101.10}$$

This solution is stable for 2 months without preservative under laboratory conditions.

3.2.14 Spiking Solution. Pipette 7 ml of the KNO_3 standard into a 100-ml volumetric flask, and dilute to volume.

3.2.15 Blank Solution. Dissolve 2.4 g of $KMnO_4$ and 1.2 g of NaOH in 96 ml of water. Alternatively, dilute 60 ml of $KMnO_4$/NaOH solution to 100 ml.

3.2.16 Quality Assurance Audit Samples. Same as in Method 7, Section 3.3.9. When requesting audit samples, specify that they be in the appropriate concentration range for Method 7C.

4. *Procedure*

4.1 Sampling.

4.1.1 Preparation of Collection Train. Add 200 ml of $KMnO_4$/NaOH solution (3.1.2) to each of three impingers, and assemble the train as shown in Figure 7C–1. Adjust probe heater to a temperature sufficient to prevent water condensation.

4.1.2 Leak-Check Procedure. A leak-check prior to the sampling run should be carried out; a leak-check after the sampling run is mandatory. Carry out the leak-check(s) according to Method 6, Section 4.1.2.

4.1.3 Check of Rotameter Calibration Accuracy (Optional). Disconnect the probe from the first impinger, and connect the filter (2.1.6). Start the pump, and adjust the rotameter to read between 400 and 500 cc/min. After the flow rate has stabilized, start measuring the volume sampled, as recorded by the dry gas meter (DGM), and the sampling time. Collect enough volume to measure accurately the flow rate, and calculate the flow rate. This average flow rate must be less than 500 cc/min for the sample to be valid; therefore, it is recommended that the flow rate be checked as above prior to each test.

4.1.4 Sample Collection. Record the initial DGM reading and barometric pressure. Determine the sampling point or points according to the appropriate regulations, e.g., §60.46(c) of 40 CFR Part 60. Position the tip of the probe at the sampling point, connect the probe to the first impinger, and start the pump. Adjust the sample flow to a value between 400 and 500 cc/min. CAUTION: HIGHER FLOW RATES WILL PRODUCE LOW RESULTS. Once adjusted, maintain a constant flow rate during the entire sampling run. Sample for 60 minutes. For relative accuracy (RA) testing of continuous emission monitors, the minimum sampling time is 1 hour, sampling 20 minutes at each traverse point. [NOTE.— When the SO_2 concentration is greater than 1200 ppm, the sampling time may have to be reduced to 30 minutes to eliminate plugging of the impinger orifice with MnO_2. For RA tests with SO_2 greater than 1200 ppm, sample for 30 minutes (10 minutes at each point)]. Record the DGM temperature, and check the flow rate at least every 5 minutes. At the conclusion of each run, turn off the pump, remove probe from the stack, and record the final readings. Divide the sample volume by the sampling time to determine the average flow rate. Conduct a leak-check as in Section 4.1.2. If a leak is found, void the test run, or use procedures acceptable to the Administrator to adjust the sample volume for the leakage.

4.1.5 CO_2 Measurement. During sampling, measure the CO_2 content of the stack gas near the sampling point using Method 3. The single-point grab sampling procedure is adequate, provided the measurements are made at least three times—near the start, midway, and before the end of a run and the average CO_2 concentration is computed. The Orsat or Fyrite analyzer may be used for this analysis.

4.2 Sample Recovery. Disconnect the impingers. Pour the contents of the impingers into a 1-liter polyethylene bottle using a funnel and a stirring rod (or other means) to prevent spillage. Complete the quantitative transfer by rinsing the impingers and connecting tubes with water until the rinsings are clear to light pink, and add the rinsings to the bottle. Mix the sample, and mark the solution level. Seal and identify the sample container.

4.3 Sample Preparation for Analysis. Prepare a cadmium reduction column as follows: Fill the burette (2.2.12) with water. Add freshly prepared cadmium slowly with tapping until no further settling occurs. The height of the cadmium column should be 39 cm. When not in use, store the column under rinse solution (3.2.7). (NOTE.— The column should not contain any bands of cadmium fines. This may occur if regenerated column is used and will greatly reduce the column lifetime.)

Note the level of liquid in the sample container, and determine whether any sample was lost during shipment. If a noticeable amount of leakage has occurred, the volume lost can be determined from the difference between initial and final solution levels, and this value can then be used to correct the analytical result. Quantitatively transfer the contents to a 1-liter volumetric flask, and dilute to volume.

Take a 100-ml aliquot of the sample and blank (unexposed $KMnO_4$/NaOH) solutions, and transfer to 400-ml beakers containing magnetic stirring bars. Using a pH meter,

add concentrated H_2SO_4 with stirring until a pH of 0.7 is obtained. Allow the solutions to stand for 15 minutes. Cover the beakers with watch glasses, and bring the temperature of the solutions to 50 °C. Keep the temperature below 60 °C. Dissolve 4.8 g of oxalic acid in a minimum volume of water, approximately 50 ml, at room temperature. Do not heat the solution. Add this solution slowly, in increments, until the $KMnO_4$ solution becomes colorless. If the color is not completely removed, prepare some more of the above oxalic acid solution, and add until a colorless solution is obtained. Add an excess of oxalic acid by dissolving 1.6 g of oxalic acid in 50 ml of water, and add 6 ml of this solution to the colorless solution. If suspended matter is present, add concentrated H_2SO_4 until a clear solution is obtained.

Allow the samples to cool to near room temperature, being sure that the samples are still clear. Adjust the pH to 11.7 to 12.0 with 10 N NaOH. Quantitatively transfer the mixture to a Buchner funnel containing GF/C filter paper, and filter the precipitate. Filter the mixture into a 500-ml filtering flask. Wash the solid material four times with water. When filtration is complete, wash the Teflon tubing, quantitatively transfer the filtrate to a 500-ml volumetric flask, and dilute to volume. The samples are now ready for cadmium reduction. Pipette a 50-ml aliquot of the sample into a 150-ml beaker, and add a magnetic stirring bar. Pipette in 1.0 ml of 6.5 percent EDTA solution, and mix.

Determine the correct stopcock setting to establish a flow rate of 7 to 9 ml/min of column rinse solution through the cadmium reduction column. Use a 50-ml graduated cylinder to collect and measure the solution volume. After the last of the rinse solution has passed from the funnel into the burette, but before air entrapment can occur, start adding the sample, and collect it in a 250-ml graduated cylinder. Complete the quantitative transfer of the sample to the column as the sample passes through the column. After the last of the sample has passed from the funnel into the burette, start adding 60 ml of column rinse solution, and collect the rinse solution until the solution just disappears from the funnel. Quantitatively transfer the sample to a 200-ml volumetric flask (250-ml may be required), and dilute to volume. The samples are now ready for NO_2– analysis. [NOTE.— Both the sample and blank should go through this procedure. Additionally, two spiked samples should be run with every group of samples passed through the column. To do this, prepare two additional 50–ml aliquots of the sample suspected to have the highest NO_3– concentration, and add 1 ml of the spiking solution to these aliquots. If the spike recovery or column efficiency (see 6.2.1) is below 95 percent, prepare a new column, and repeat the cadmium reduction].

4.4 Sample Analysis. Pipette 10 ml of sample into a culture tube. (NOTE.— Some test tubes give a high blank NO_2– value but culture tubes do not.) Pipette in 10 ml of sulfanilamide solution and 1.4 ml of NEDA solution. Cover the culture tube with parafilm, and mix the solution. Prepare a blank in the same manner using the sample from treatment of the unexposed $KMnO_4$/NaOH solution (3.1.2). Also, prepare a calibration standard to check the slope of the calibration curve. After a 10-minute color development interval, measure the absorbance at 540 nm against water. Read µg NO_2–/ml from the calibration curve. If the absorbance is greater than that of the highest calibration standard, pipette less than 10 ml of sample and enough water to make the total sample volume 10 ml, and repeat the analysis. Determine the NO_2 concentration using the calibration curve obtained in Section 5.3.

4.5 Audit Analysis. This is the same as in Method 7, Section 4.4.

5. *Calibration*

5.1 Dry Gas Metering System (DGM).

5.1.1 Initial Calibration. Same as in Method 6, Section 5.1.1. For detailed instructions on carrying out this calibration, it is suggested that Section 3.5.2 of Citation 4 in the Bibiography be consulted.

5.1.2 Post-Test Calibration Check. Same as in Method 6, Section 5.1.2.

5.2 Thermometers for DGM and Barometer. Same as in Method 6, Sections 5.2 and 5.4, respectively.

5.3 Calibration Curve for Spectrophotometer. Dilute 5.0 ml of the $NaNO_2$ standard solution to 200 ml with water. This solution nominally contains 25 µg NO_2–/ml. Use this solution to prepare calibration standards to cover the range of 0.25 to 3.00 µg NO_2–/ml. Prepare a minimum of three standards each for the linear and slightly nonlinear (described below) range of the curve. Use pipettes for all additions.

Run standards and a water blank as instructed in Section 4.4. Plot the net absorbance vs µgNO_2–/ml. Draw a smooth curve through the points. The curve should be linear up to an absorbance of approximately 1.2 with a slope of approximately 0.53 absorbance units/µg NO_2–/ml. The curve should pass through the origin. The curve is slightly nonlinear from an absorbance of 1.2 to 1.6.

6. *Calculations*

Carry out calculations, retaining at least one extra decimal figure beyond that of the acquired data. Round off figures after final calculation.

6.1 Sample volume, dry basis, corrected to standard conditions.

$$V_{m(std)} = V_m XY \frac{T_{std}}{T_m} \frac{P_{bar}}{P_{std}} = K_1 XY \frac{V_m P_{bar}}{T_m} \qquad \text{Eq. 7C-1}$$

Where:

$V_{m(std)}$=Dry gas volume measured by the dry gas meter, corrected to standard conditions, dscm.

V_m=Dry gas volume as measured by the dry gas meter, dcm.

Y=Dry gas meter calibration factor.

X=Correction factor for CO_2 collection.

$$= \frac{100}{100 - \%CO_2 (v/v)}$$

P_{bar}=Barometric pressure, mm Hg.

P_{std}=Standard absolute pressure, 760 mm Hg.

T_m=Average dry gas meter absolute temperature, °K.

T_{std}=Standard absolute temperature, 293 °K.

K_1=0.3858 °K/mm Hg.

6.2 Total µg NO_2 Per Sample.

6.2.1 Efficiency of Cadmium Reduction Column. Calculate this value as follows:

$$E = \frac{(x - y)\,200}{s \times 1.0 \times \frac{46.01}{62.01}} = \frac{269.6\,(x - y)}{s} \qquad \text{(Eq. 7C-2)}$$

Where:

E=Column efficiency, unitless.

x=Analysis of spiked sample, µg NO_2^-/ml.

y=Analysis of unspiked sample, µg NO_2^-/ml.

200=Final volume of sample and blank after passing through the column, ml.

s=Concentration of spiking solution, µg NO_3^-/ml.

1.0=Volume of spiking solution added, ml.

46.01=µg NO_2^-/µ mole.

62.01=µg NO_3^-/µ mole.

6.2.2 Total µg NO_2.

$$m = \frac{(S - B)}{E} \times 200 \times \frac{500}{50} \times \frac{1000}{100} = \frac{(2 \times 10^4)(S - B)}{E} \qquad \text{Eq. 7C-3}$$

Where:

m=Mass of NO_x, as NO_2, in sample, µg.

S=Analysis of sample, µg NO_2^-/ml.

B=Analysis of blank, µg NO_2^-/ml.

500=Total volume of prepared sample, ml.

50=Aliquot of prepared sample processed through cadmium column, ml.

100=Aliquot of $KMnO_4$/NaOH solution, ml.

1000=Total volume of $KMnO_4$/NaOH solution ml.

6.3 Sample Concentration.

$$C = K_2 \frac{m}{V_{m(std)}}$$

Where:

C=Concentration of NO_x as NO_2, dry basis, mg/dscm.

K_2=10^{-3} mg/µg.

6.4 Conversion Factors.

1.0 ppm NO=1.247 mg NO/m^3 at STP.

1.0 ppm NO_2=1.912 mg NO_2/m^3 at STP.

1 ft^3=2.832×10^{-2} m^3.

1000 mg = 1 g.

7. *Quality Control*

Quality control procedures are specified in Sections 4.1.3 (flow rate accuracy); 4.3 (cadmium column efficiency); 4.4 (calibration

curve accuracy); and 4.5 (audit analysis accuracy).

8. *Bibliography*

1. Margeson, J.H., W.J. Mitchell, J.C. Suggs, and M.R. Midgett. Integrated Sampling and Analysis Methods for Determining NO_x Emissions at Electric Utility Plants. U.S. Environmental Protection Agency, Research Triangle Park, NC. Journal of the Air Pollution Control Association. *32*:1210–1215. 1982.

2. Memorandum and attachment from J.H. Margeson, Source Branch, Quality Assurance Division, Environmental Monitoring Systems Laboratory, to The Record, EPA. March 30, 1983. NH_3 Interference in Methods 7C and 7D.

3. Margeson, J.H., J.C. Suggs, and M.R. Midgett. Reduction of Nitrate to Nitrite with Cadmium. Anal. Chem. *52*:1955–57. 1980.

4. Quality Assurance Handbook for Air Pollution Measurement Systems. Volume III—Stationary Source Specific Methods. August 1977. U.S. Environmental Protection Agency. Research Triangle Park, NC. Publication No. EPA–600/4–77–027b. August 1977.

5. Margeson, J.H., et al. An Integrated Method for Determining NO_x Emissions at Nitric Acid Plants. Manuscript submitted to Analytical Chemistry. April 1984.

METHOD 7D—DETERMINATION OF NITROGEN OXIDE EMISSIONS FROM STATIONARY SOURCES—ALKALINE-PERMANGANATE/ION CHROMATOGRAPHIC METHOD

1. *Applicability, Principle, Interferences, Precision, Bias, and Stability*

1.1 Applicability. The method is applicable to the determination of NO_x emissions from fossil-fuel fired steam generators, electric utility plants, nitric acid plants, or other sources as specified in the regulations. The lower detectable limit is similar to that for Method 7C. No upper limit has been established; however, when using the recommended sampling conditions, the method has been found to collect NO_x emissions quantitatively up to 1782 mg NO_x/m^3, as NO_2 (932 pm NO_x).

1.2 Principle. An integrated gas sample is extracted from the stack and collected in alkaline-potassium permanganate solution; NO_x ($NO+NO_2$) emissions are oxidized to NO_3–. Then NO_3– is analyzed by ion chromatography.

1.3 Interferences. Possible interferences are SO_2 and NH_3. High concentrations of SO_2 could interfere because SO_2 consumes MnO_4– (as does NO_x) and, therefore, could reduce the NO_x collection efficiency. However, when sampling emissions from a coal-fired electric utility plant burning 2.1-percent sulfur coal with no control of SO_2 emissions, collection efficiency was not reduced. In fact, calculations show that sampling 3000 ppm SO_2 will reduce the MnO_4– concentration by only 5 percent if all the SO_2 is consumed in the first impinger.

NH_3 is slowly oxidized to NO_3– by the absorbing solution. At 100 ppm NH_3 in the gas stream, an interference of 6 ppm NO_x (11 mg NO_2/m^3) was observed when the sample was analyzed 10 days after collection. Therefore, the method may not be applicable to plants using NH_3 injection to control NO_x emissions unless means are taken to correct the results. An equation has been developed to allow quantitation of the interference and is discussed in Citation 4 of the Bibliography.

1.4 Precision and Bias. The method does not exhibit any bias relative to Method 7. The within-laboratory relative standard deviation for a single measurement was approximately 6 percent at 200 to 270 ppm NO_x.

1.5 Stability. Collected samples are stable for at least 4 weeks.

2. *Apparatus*

2.1 Sampling and Sample Recovery. The sampling train is the same as in Figure 7C–1 of Method 7C. Component parts are the same as in Method 7C, Section 2.1.

2.2 Sample Preparation and Analysis.

2.2.1 Magnetic Stirrer. With 25- by 10-mm Teflon-coated stirring bars.

2.2.2 Filtering Flask. 500-ml capacity with sidearm.

2.2.3 Buchner Funnel. 75-mm ID. The spout equipped with a 13-mm ID by 90-mm long piece of Teflon tubing to minimize possibility of aspirating sample solution during filtration.

2.2.4 Filter Paper. Whatman GF/C, 7.0-cm diameter.

2.2.5 Stirring Rods.

2.2.6 Volumetric Flask. 250-ml.

2.2.7 Pipettes. Class A.

2.2.8 Erlenmeyer Flasks. 250-ml.

2.2.9 Ion Chromatograph. Equipped with an anion separator column to separate NO_3–, a $H^=$ suppressor, and necessary auxiliary equipment. Nonsuppressed and other forms of ion chromatography may also be used provided that adequate resolution of NO_3– is obtained. The system must also be able to resolve and detect NO_2–.

3. *Reagents*

Unless otherwise indicated, all reagents should conform to the specifications established by the Committee on Analytical Reagents of the American Chemical Society, where such specifications are available; otherwise, use the best available grade.

3.1 Sampling.

3.1.1 Water. Deionized distilled to conform to ASTM Specification D 1193–74, Type 3 (incorporated by reference—see §60.17).

3.1.2 Potassium Permanganate, 4.0 Percent (w/w), Sodium Hydroxide, 2.0 Percent (w/w). Dissolve 40.0 g of $KMnO_4$ and 20.0 g of NaOH in 940 ml of water.

3.2 Sample Preparation and Analysis.

3.2.1 Water. Same as in Section 3.1.1.

3.2.2 Hydrogen Peroxide, 5 Percent. Dilute 30 percent H_2O_2 1:5 (v/v) with water.

3.2.3 Blank Solution. Dissolve 2.4 g of $KMnO_4$ and 1.2 g of NaOH in 96 ml of water. Alternatively, dilute 60 ml of $KMnO_4$/NaOH solution to 100 ml.

3.2.4 KNO_3 Standard Solution. Dry KNO_3 at 110 °C for 2 hours, and cool in a desiccator. Accurately weigh 9 to 10 g of KNO_3 to within 0.1 mg, dissolve in water, and dilute to 1 liter. Calculate the exact NO_3– concentration from the following relationship:

$$\mu g NO_3 - / ml = g \text{ of } KNO_{3-} \times 10^3 \times \frac{62.01}{101.10}$$

This solution is stable for 2 months without preservative under laboratory conditions.

3.2.5 Eluent, 0.003 M $NaHCO_3$/0.0024 M Na_2CO_3. Dissolve 1.008 g $NaHCO_3$ and 1.018 g Na_2CO_3 in water, and dilute to 4 liters. Other eluents capable of resolving nitrate ion from sulfate and other species present may be used.

3.2.6 Quality Assurance Audit Samples. This is the same as in Method 7, Section 3.3.9. When requesting audit samples, specify that they be in the appropriate concentration range for Method 7D.

4. *Procedure*

4.1 Sampling. This is the same as in Method 7C, Section 4.1.

4.2 Sample Recovery. This is the same as in Method 7C, Section 4.2.

4.3 Sample Preparation for Analysis. Note the level of liquid in the sample container, and determine whether any sample was lost during shipment. If a noticeable amount of leakage has occurred, the volume lost can be determined from the difference between initial and final solution levels, and this value can then be used to correct the analytical result. Quantitatively transfer the contents to a 1-liter volumetric flask, and dilute to volume.

Sample preparation can be started 36 hours after collection. This time is necessary to ensure that all NO_2– is converted to NO_3–. Take a 50–ml aliquot of the sample and blank, and transfer to 250-ml Erlenmeyer flasks. Add a magnetic stirring bar. Adjust the stirring rate to as fast a rate as possible without loss of solution. Add 5 percent H_2O_2 in increments of approximately 5 ml using a 5-ml pipette. When the $KMnO_4$ color appears to have been removed, allow the precipitate to settle, and examine the supernatant liquid. If the liquid is clear, the H_2O_2 addition is complete. If the $KMnO_4$ color persists, add more H_2O_2, with stirring, until the supernatant liquid is clear. (NOTE: The faster the stirring rate, the less volume of H_2O_2 that will be required to remove the $KMnO_4$.) Quantitatively transfer the mixture to a Buchner funnel containing GF/C filter paper, and filter the precipitate. The spout of the Buchner funnel should be equipped with a 13-mm ID by 90-mm long piece of Teflon tubing. This modification minimizes the possibility of aspirating sample solution during filtration. Filter the mixture into a 500-ml filtering flask. Wash the solid material four times with water. When filtration is complete, wash the Teflon tubing, quantitatively transfer the filtrate to a 250-ml volumetric flask, and dilute to volume. The sample and blank are now ready for NO_3– analysis.

4.4 Sample Analysis. The following chromatographic conditions are recommended: 0.003 M $NaHCO_3$/0.0024 M Na_2CO_3 eluent solution. (3.2.5), full scale range 3 μMHO; sample loop, 0.5 ml; flow rate, 2.5 ml/min. These conditions should give a NO_3– retention time of approximately 15 minutes (Figure 7D–1).

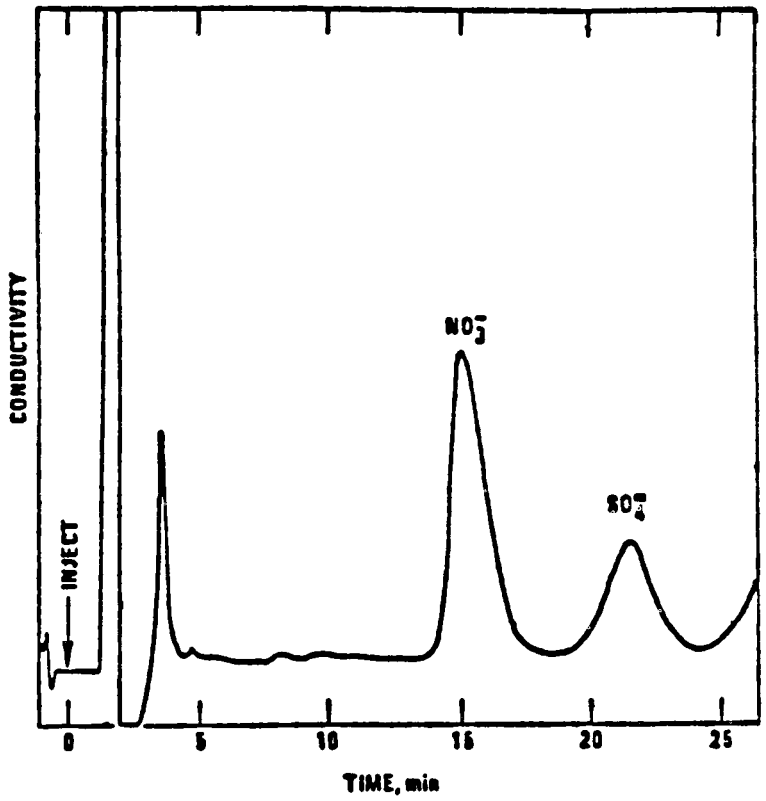

Figure 7D-1. Ion chromatograph of a prepared sample

Establish a stable baseline. Inject a sample of water, and determine if any NO_3- appears in the chromatogram. If NO_3- is present, repeat the water load/injection procedure approximately five times; then re-inject a water sample, and observe the chromatogram. When no NO_3- is present, the instrument is ready for use. Inject calibration standards. Then inject samples and a blank. Repeat the injection of the calibration standards (to compensate for any drift in response of the instrument). Measure the NO_3- peak height or peak area, and determine the sample concentration from the calibration curve.

4.5 Audit analysis. This is the same as in Method 7, Section 4.4.

5. *Calibration*

5.1 Dry Gas Metering System (DGM).

5.1.1 Initial Calibration. Same as in Method 6, Section 5.1.1. For detailed instructions on carrying out this calibration, it is suggested that Section 3.5.2 of Citation 3 in the Bibliography be consulted.

5.1.2 Post-Test Calibration Check. Same as in Method 6, Section 5.1.2.

5.2 Thermometers for DGM and Barometer. Same as in Method 6, Section 5.2 and 5.4, respectively.

5.3 Calibration Curve for Ion Chromatograph. Dilute a given volume (1.0 ml or greater) of the KNO_3 standard solution to a convenient volume with water, and use this solution to prepare calibration standards. Prepare at least four standards to cover the range of the samples being analyzed. Use pipettes for all additions. Run standards as instructed in Section 4.4. Determine peak height or area, and plot the individual values versus concentration in μgNO_3–/ml. Do not

force the curve through zero. Draw a smooth curve through the points. The curve should be linear. With the linear curve, use linear regression to determine the calibration equation.

6. *Calculations*

Carry out calculations, retaining at least one extra decimal figure beyond that of the acquired data. Round off figures after final calculation.

6.1 Sample Volume, Dry Basis, Corrected to Standard Conditions. Same as in Method 7C, Section 6.1.

6.2 Total µg NO_2 Per Sample.

$$m = (S-B)\times 250 \times \frac{1000}{50} \times \frac{46.01}{62.01} = 3710\,(S-B) \qquad \text{Eq. 7D-1}$$

Where:

m=Mass of NO_x, as NO_2, in sample, µg.
S=Analysis of sample, µg NO_3–/ml.
B=Analysis of blank, µg NO_3–/ml.
250=Volume of prepared sample, ml.
46.01=Molecular weight of NO_2–.
62.01=Molecular weight of NO_3–.
1000=Total volume of $KMnO_4$ solution, ml.
50=Aliquot $KMnO_4$/NaOH solution, ml.

6.3 Sample Concentration.

$$C = K_2 \frac{m}{V_{m(std)}}$$

Where:

C=Concentration of NO_x as NO_2, dry basis, mg/dscm.
K_2=10^{-3} mg/µg.
$V_{m(std)}$=Dry gas volume measured by the dry gas meter, corrected to standard conditions, dscm.

6.4 Conversion Factors.

1.0 ppm NO=1.247 mg NO/m^3 at STP.
1.0 ppm NO_2=1.912 mg NO_2/m^3 at STP.
1 ft^3=2.832×10^{-2} m^3.
1000 mg = 1 g.

7. *Quality Control*

Quality control procedures are specified in Sections 4.1.3 (flow rate accuracy) and 4.5 (audit analysis accuracy) of Method 7C.

8. *Bibliography*

1. Margeson, J.H., W.J. Mitchell, J.C. Suggs, and M.R. Midgett. Integrated Sampling and Analysis Methods for Determining NO_x Emissions at Electric Utility Plants. U.S. Environmental Protection Agency, Research Triangle Park, NC. Journal of the Air Pollution Control Association. *32:*1210–1215. 1982.

2. Memorandum and attachment from J.H. Margeson, Source Branch, Quality Assurance Division, Environmental Monitoring Systems Laboratory, to The Record, EPA. March 30, 1983. NH_3 Interference in Methods 7C and 7D.

3. Quality Assurance Handbook for Air Pollution Measurement Systems. Volume III—Stationary Source Specific Methods. U.S. Environmental Protection Agency, Research Triangle Park, NC. Publication No. EPA–600/4–77–027b. August 1977.

4. Margeson, J.H., et al. An Integrated Method for determining NO_x Emissions at Nitric Acid Plants. Manuscript submitted to Analytical Chemistry. April 1984.

METHOD 7E—DETERMINATION OF NITROGEN OXIDES EMISSIONS FROM STATIONARY SOURCES (INSTRUMENTAL ANALYZER PROCEDURE)

1. *Applicability and Principle*

1.1 Applicability. This method is applicable to the determination of nitrogen oxides (NO_x) concentrations in emissions from stationary sources only when specified within the regulations.

1.2 Principle. A gas simple is continuously extracted from a stack, and a portion of the sample is conveyed to an instrumental chemiluminescent analyzer for determination of NO_x concentration. Performance specifications and test procedures are provided to ensure reliable data.

2. *Range and Sensitivity*

Same as Method 6C, Sections 2.1 and 2.2.

3. *Definitions*

3.1 Measurement System. The total equipment required for the determination of NO_x concentration. The measurement system consists of the following major subsystems:

3.1.1 Sample Interface, Gas Analyzer, and Data Recorder. Same as Method 6C, Sections 3.1.1, 3.1.2, and 3.1.3.

3.1.2 NO_2 to NO Converter. A device that converts the nitrogen dioxide (NO_2) in the sample gas to nitrogen oxide (NO).

3.2 Span, Calibration Gas, Analyzer Calibration Error, Sampling System Bias, Zero Drift, Calibration Drift, and Response Time. Same as Method 6C, Sections 3.2 through 3.8.

3.3 Interference Response. The output response of the measurement system to a component in the sample gas, other than the gas component being measured.

4. *Measurement System Performance Specifications*

Same as Method 6C, Sections 4.1 through 4.4.

5. *Apparatus and Reagents*

5.1 Measurement System. Any measurement system for NO_x that meets the specifications of this method. A schematic of an acceptable measurement system is shown in Figure 6C–1 of Method 6C. The essential components of the measurement system are described below:

5.1.1 Sample Probe, Sample Line, Calibration Valve Assembly, Moisture Removal System, Particulate Filter, Sample Pump, Sample Flow Rate Control, Sample Gas Manifold, and Data Recorder. Same as Method 6C, Sections 5.1.1 through 5.1.9, and 5.1.11.

5.1.2 NO_2 to NO Converter. That portion of the system that converts the nitrogen dioxide (NO_2) in the sample gas to nitrogen oxide (NO). An NO_2 to NO converter is not necessary if data are presented to demonstrate that the NO_2 portion of the exhaust gas is less than 5 percent of the total NO_x concentration.

5.1.3 NO_x Analyzer. An analyzer based on the principles of chemiluminescence, to determine continuously the NO_x concentration in the sample gas stream. The analyzer shall meet the applicable performance specifications of Section 4. A means of controlling the analyzer flow rate and a device for determining proper sample flow rate (e.g., precision rotameter, pressure gauge downstream of all flow controls, etc.) shall be provided at the analyzer.

5.2 NO_x Calibration Gases. The calibration gases for the NO_x analyzer shall be NO in N_2. Three calibration gases, as specified in Sections 5.3.1 through 5.3.3. of Method 6C, shall be used. Ambient air may be used for the zero gas.

6. *Measurement System Performance Test Procedures*

Perform the following procedures before measurement of emissions (Section 7).

6.1 Calibration Gas Concentration Verification. Follow Section 6.1 of Method 6C, except if calibration gas analysis is required, use Method 7, and change all 5 percent performance values to 10 percent (or 10 ppm, whichever is greater).

6.2 Interference Response. Conduct an interference response test of the analyzer prior to its initial use in the field. Thereafter, recheck the measurement system if changes are made in the instrumentation that could alter the interference response (e.g., changes in the gas detector). Conduct the interference response in accordance with Section 5.4 of Method 20.

6.3 Measurement System Preparation, Analyzer Calibration Error, and Sample System Bias Check. Follow Sections 6.2 through 6.4 of Method 6C.

6.4 NO_2 to NO Conversion Efficiency. Unless data are presented to demonstrate that the NO_2 concentration within the sample stream is not greater than 5 percent of the NO_x concentration, conduct an NO_2 to NO conversion efficiency test in accordance with Section 5.6 of Method 20.

7. *Emission Test Procedure*

7.1 Selection of Sampling Site and Sampling Points. Select a measurement site and sampling points using the same criteria that are applicable to tests performed using Method 7.

7.2 Sample Collection. Position the sampling probe at the first measurement point, and begin sampling at the same rate as used during the system calibration drift test. Maintain constant rate sampling (i.e., ±10 percent) during the entire run. The sampling time per run shall be the same as the total time required to perform a run using Method 7, plus twice the system response time. For each run, use only those measurements obtained after twice the response time of the measurement system has elapsed, to determine the average effluent concentration.

7.3 Zero and Calibration Drift Test. Follow Section 7.4 of Method 6C.

8. *Emission Calculation*

Follow Section 8 of Method 6C.

9. *Bibliography*

Same as bibliography of Method 6C.

Method 8—Determination of Sulfuric Acid Mist and Sulfur Dioxide Emissions From Stationary Sources

1. *Principle and Applicability*

1.1 Principle. A gas sample is extracted isokinetically from the stack. The sulfuric acid mist (including sulfur trioxide) and the sulfur dioxide are separated, and both fractions are measured separately by the barium-thorin titration method.

1.2 Applicability. This method is applicable for the determination of sulfuric acid mist (including sulfur trioxide, and in the absence of other particulate matter) and sulfur dioxide emissions from stationary sources. Collaborative tests have shown that the minimum detectable limits of the method are 0.05 milligrams/cubic meter ($0.03>10^{-7}$ pounds/cubic foot) for sulfur trioxide and 1.2 mg/m^3 ($0.74\ 10^{-7}$ lb/ft^3) for sulfur dioxide. No upper limits have been established. Based on theoretical calculations for 200 milliters of 3 percent hydrogen peroxide solution, the upper concentration limit for sulfur dioxide in a 1.0 m^3 (35.3 ft^3) gas sample is about 12,500 mg/m^3 (7.7×10^{-4} lb/ft^3). The upper limit can be extended by increasing the quantity of peroxide solution in the impingers.

Possible interfering agents of this method are fluorides, free ammonia, and dimethyl aniline. If any of these interfering agents are present (this can be determined by knowledge of the process), alternative methods,

subject to the approval of the Administrator, U. S. E. P.A., are required.

Filterable particulate matter may be determined along with SO_3 and SO_2 (subject to the approval of the Administrator) by inserting a heated glass fiber filter between the probe and isopropanol impinger (see Section 2.1 of Method 6.) If this option is chosen, particulate analysis is gravimetric only; H_2SO_4 acid mist is not determined separately.

2. *Apparatus*

2.1 Sampling. A schematic of the sampling train used in this method is shown in Figure 8–1; it is similiar to the Method 5 train except that the filter position is different and the filter holder does not have to be heated. Commercial models of this train are available. For those who desire to build their own, however, complete construction details are described in APTD–0581. Changes from the APTD–0581 document and allowable modifications to Figure 8–1 are discussed in the following subsections.

The operating and maintenance procedures for the sampling train are described in APTD–0576. Since correct usage is important in obtaining valid results, all users should read the APTD–0576 document and adopt the operating and maintenance procedures outlined in it, unless otherwise specified herein. Further details and guidelines on operation and maintenance are given in Method 5 and should be read and followed whenever they are applicable.

2.1.1 Probe Nozzle. Same as Method 5, Section 2.1.1.

2.1.2 Probe Liner. Borosilicate or quartz glass, with a heating system to prevent visible condensation during sampling. Do not use metal probe liners.

2.1.3 Pitot Tube. Same as Method 5, Section 2.1.3.

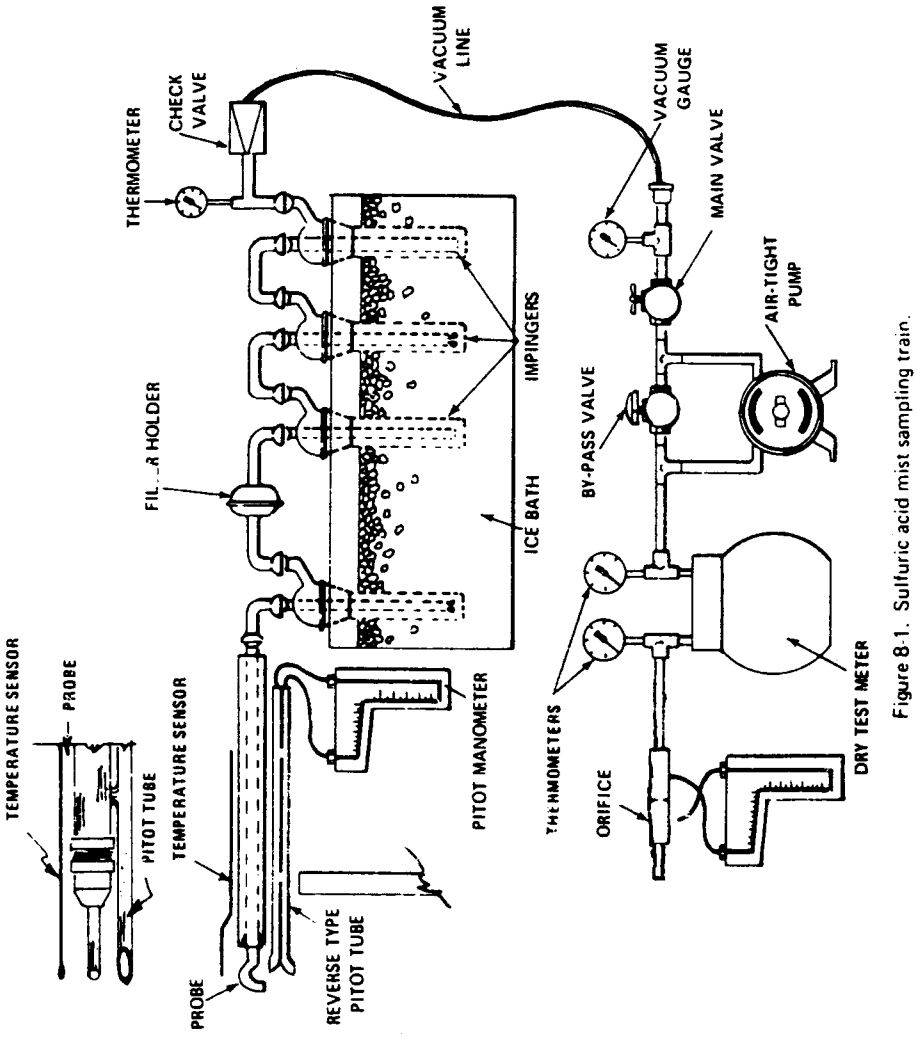

Figure 8-1. Sulfuric acid mist sampling train.

2.1.4 Differential Pressure Gauge. Same as Method 5, Section 2.1.4.

2.1.5 Filter Holder. Borosilicate glass, with a glass frit filter support and a silicone rubber gasket. Other gasket materials, e.g., Teflon or Viton, may be used subject to the approval of the Administrator. The holder design shall provide a positive seal against leakage from the outside or around the filter. The filter holder shall be placed between the first and second impingers. Note: Do not heat the filter holder.

2.1.6 Impingers. Four, as shown in Figure 8–1. The first and third shall be of the Greenburg-Smith design with standard tips. The second and fourth shall be of the Greenburg-Smith design, modified by replacing the insert with an approximately 13 millimeter (0.5 in.) ID glass tube, having an unconstricted tip located 13 mm (0.5 in.) from the bottom of the flask. Similar collection systems, which have been approved by the Administrator, may be used.

2.1.7 Metering System. Same as Method 5, Section 2.1.8.

2.1.8 Barometer. Same as Method 5, Section 2.1.9.

2.1.9 Gas Density Determination Equipment. Same as Method 5, Section 2.1.10.

2.1.10 Temperature Gauge. Thermometer, or equivalent, to measure the temperature of the gas leaving the impinger train to within 1 °C (2 °F).

2.2 Sample Recovery.

2.2.1 Wash Bottles. Polyethylene or glass, 500 ml. (two).

2.2.2 Graduated Cylinders. 250 ml, 1 liter. (Volumetric flasks may also be used.

2.2.3 Storage Bottles. Leak-free polyethlene bottles, 1000 ml size (two for each sampling run).

2.2.4 Trip Balance. 500-gram capacity, to measure to ±0.5 g (necessary only if a moisture content analysis is to be done).

2.3 Analysis.

2.3.1 Pipettes. Volumetric 25 ml, 100 ml.

2.3.2 Burette, 50 ml.

2.3.3 Erlenmeyer Flask. 250 ml. (one for each sample, blank, and standard).

2.3.4 Graduated Cylinder. 100 ml.

2.3.5 Trip Balance. 500 g capacity, to measure to ±0.5 g.

2.3.6 Dropping Bottle. To add indicator solution, 125-ml size.

3. *Reagents*

Unless otherwise indicated, all reagents are to conform to the specifications established by the Committee on Analytical Reagents of the American Chemical Society, where such specifications are available. Otherwise, use the best available grade.

3.1 Sampling.

3.1.1 Filters. Same as Method 5, Section 3.1.1.

3.1.2 Silica Gel. Same as Method 5, Section 3.1.2.

3.1.3 Water. Deionized, distilled to conform to ASTM Specification D1193–77, Type 3 (incorporated by reference—see §60.17). At the option of the analyst, the $KMnO_4$ test for oxidizable organic matter may be omitted when high concentrations of organic matter are not expected to be present.

3.1.4 Isopropanol. 80 Percent. Mix 800 ml of isopropanol with 200 ml of deionized, distilled water.

NOTE: Experience has shown that only A.C.S. grade isopropanol is satisfactory. Tests have shown that isopropanol obtained from commercial sources occasionally has peroxide impurities that will cause erroneously high sulfuric acid mist measurement. Use the following test for detecting peroxides in each lot of isopropanol: Shake 10 ml of the isopropanol with 10 ml of freshly prepared 10 percent potassium iodide solution. Prepare a blank by similarly treating 10 ml of distilled water. After 1 minute, read the absorbance on a spectrophotometer at 352 nanometers. If the absorbance exceeds 0.1, the isopropanol shall not be used. Peroxides may be removed from isopropanol by redistilling, or by passage through a column of activated alumina. However, reagent grade isopropanol with suitably low peroxide levels is readily available from commercial sources; therefore, rejection of contaminated lots may be more efficient than following the peroxide removal procedure.

3.1.5 Hydrogen Peroxide, 3 Percent. Dilute 100 ml of 30 percent hydrogen peroxide to 1 liter with deionized, distilled water. Prepare fresh daily.

3.1.6 Crushed Ice.

3.2 Sample Recovery.

3.2.1 Water. Same as 3.1.3.

3.2.2 Isopropanol, 80 Percent. Same as 3.1.4.

3.3 Analysis.

3.3.1 Water. Same as 3.1.3.

3.3.2 Isopropanol, 100 Percent.

3.3.3 Thorin Indicator. 1-(o-arsonophenylazo) 2-naphthol-3, 6-disulfonic acid, disodium salt, or equivalent. Dissolve 0.20 g in 100 ml of deionized, distilled water.

3.3.4 Barium Perchlorate (0.0100 Normal). Dissolve 1.95 g of barium perchlorate trihydrate ($Ba(C10_4)_2 \cdot 3H_2O$) in 200 ml deionized, distilled water, and dilute to 1 liter with isopropanol; 1.22 g of barium chloride dihydrate ($BaC1_2 \cdot 2H_2O$) may be used instead of the barium perchlorate. Standardize with sulfuric acid as in Section 5.2. This solution must be protected against evaporation at all times.

3.3.5 Sulfuric Acid Standard (0.0100 N). Purchase or standardize to ±0.0002 N against 0.0100 N NaOH that has previously been standardized against primary standard potassium acid phthalate.

3.3.6 Quality Assurance Audit Samples. Same as in Method 6, Section 3.3.6.

4. *Procedure*

4.1 Sampling.

4.1.1 Pretest Preparation. Follow the procedure outlined in Method 5, Section 4.1.1; filters should be inspected, but need not be desiccated, weighed, or identified. If the effluent gas can be considered dry, i.e., moisture free, the silica gel need not be weighed.

4.1.2 Preliminary Determinations. Follow the procedure outlined in Method 5, Section 4.1.2.

4.1.3 Preparation of Collection Train. Follow the procedure outlined in Method 5, Section 4.1.3 (except for the second paragraph and other obviously inapplicable parts) and use Figure 8–1 instead of Figure 5–1. Replace the second paragraph with: Place 100 ml of 80 percent isopropanol in the first impinger, 100 ml of 3 percent hydrogen peroxide in both the second and third impingers; retain a portion of each reagent for use as a blank solution. Place about 200 g of silica gel in the fourth impinger.

NOTE: If moisture content is to be determined by impinger analysis, weigh each of the first three impingers (plus absorbing solution) to the nearest 0.5 g and record these

weights. The weight of the silica gel (or silica gel plus container) must also be determined to the nearest 0.5 g and recorded.

4.1.4 Pretest Leak-Check Procedure. Follow the basic procedure outlined in Method 5, Section 4.1.4.1, noting that the probe heater shall be adjusted to the minimum temperature required to prevent condensation, and also that verbage such as, ''. . . plugging the inlet to the filter holder . . .,'' shall be replaced by, ''. . . plugging the inlet to the first impinger . . .'' The pretest leak-check is optional.

4.1.5 Train Operation. Follow the basic procedures outlined in Method 5, Section 4.1.5, in conjunction with the following special instructions. Data shall be recorded on a sheet similar to the one in Figure 8–2. The sampling rate shall not exceed 0.030 m^3/min (1.0 cfm) during the run. Periodically during the test, observe the connecting line between the probe and first impinger for signs of condensation. If it does occur, adjust the probe heater setting upward to the minimum temperature required to prevent condensation. If component changes become necessary during a run, a leak-check shall be done immediately before each change, according to the procedure outlined in Section 4.1.4.2 of Method 5 (with appropriate modifications, as mentioned in Section 4.1.4 of this method); record all leak rates. If the leakage rate(s) exceed the specified rate, the tester shall either void the run or shall plan to correct the sample volume as outlined in Section 6.3 of Method 5. Immediately after component changes, leak-checks are optional. If these leak-checks are done, the procedure outlined in Section 4.1.4.1 of Method 5 (with appropriate modifications) shall be used.

FIGURE 8–2—FIELD DATA

Plant .....
Location .....
Operator .....
Date .....
Run No .....
Sample box No .....
Meter box No .....
Meter Δ H@ .....
C factor .....
Pitot tube coefficient, Cp .....

Static pressure, mm Hg (in. Hg) .....
Ambient temperature .....
Barometer pressure .....
Assumed moisture, % .....
Probe length, m (ft) .....
Nozzle identification No .....
Average calibrated nozzle diameter, cm (in.) .....
Probed heater setting .....
Leak rate, m^3/min, (cfm) .....
Probe liner material .....
Filter No. .....

SCHEMATIC OF STACK CROSS SECTION

Traverse point number	Sampling time	Vacuum	Stack temperature (T_s)	Velocity head (Δ P)	Pressure differential-across orifice meter	Gas sample volume	Gas sample temperature at dry gas meter		Temperature of gas leaving condenser or last impinger
							Inlet	Outlet	
	(θ), min.	mm Hg (in. Hg)	°C (°F)	mm H_20 (in H_20)	mm H_20 (in H_20)	m^3 (ft^3)	°C (°F)	°C (°F)	°C (°F)
Total							Avg	Avg	
Average							Avg		

After turning off the pump and recording the final readings at the conclusion of each run, remove the probe from the stack. Conduct a post-test (mandatory) leak-check as in Section 4.1.4.3 of Method 5 (with appropriate modification) and record the leak rate. If the post-test leakage rate exceeds the specified acceptable rate, the tester shall either correct the sample volume, as outlined in Section 6.3 of Method 5, or shall void the run.

Drain the ice bath and, with the probe disconnected, purge the remaining part of the train, by drawing clean ambient air through the system for 15 minutes at the average flow rate used for sampling.

NOTE: Clean ambient air can be provided by passing air through a charcoal filter. At the option of the tester, ambient air (without cleaning) may be used.

4.1.6 Calculation of Percent Isokinetic. Follow the procedure outlined in Method 5, Section 4.1.6.

4.2 Sample Recovery.

4.2.1 Container No. 1. If a moisture content analysis is to be done, weigh the first impinger plus contents to the nearest 0.5 g and record this weight.

Transfer the contents of the first impinger to a 250–ml graduated cylinder. Rinse the probe, first impinger, all connecting glassware before the filter, and the front half of the filter holder with 80 percent isopropanol. Add the rinse solution to the cylinder. Dilute to 250 ml with 80 percent isopropanol. Add the filter to the solution, mix, and transfer to the storage container. Protect the solution against evaporation. Mark the level of liquid on the container and identify the sample container.

4.2.2 Container No. 2. If a moisture content analysis is to be done, weigh the second and third impingers (plus contents) to the nearest 0.5 g and record these weights. Also, weigh the spent silica gel (or silica gel plus impinger) to the nearest 0.5 g.

Transfer the solutions from the second and third impingers to a 1000–ml graduated cylinder. Rinse all connecting glassware (including back half of filter holder) between the filter and silica gel impinger with deionized, distilled water, and add this rinse water to the cylinder. Dilute to a volume of 1000 ml with deionized, distilled water. Transfer the solution to a storage container. Mark the level of liquid on the container. Seal and identify the sample container.

4.3 Analysis.

Note the level of liquid in Containers 1 and 2, and confirm whether or not any sample was lost during shipment; note this on the analytical data sheet. If a noticeable amount of leakage has occured, either void the sample or use methods, subject to the approval of the Administrator, to correct the final results.

4.3.1 Container No. 1. Shake the container holding the isopropanol solution and the filter. If the filter breaks up, allow the fragments to settle for a few minutes before removing a sample. Pipette a 100–ml aliquot of this solution into a 250–ml Erlenmeyer flask, add 2 to 4 drops of thorin indicator, and titrate to a pink endpoint using 0.0100 N barium perchlorate. Repeat the titration with a second aliquot of sample and average the titration values. Replicate titrations must agree within 1 percent or 0.2 ml, whichever is greater.

4.3.2 Container No. 2. Thoroughly mix the solution in the container holding the contents of the second and third impingers. Pipette a 10–ml aliquot of sample into a 250–ml Erlenmeyer flask. Add 40 ml of isopropanol, 2 to 4 drops of thorin indicator, and titrate to a pink endpoint using 0.0100 N barium perchlorate. Repeat the titration with a second aliquot of sample and average the titration values. Replicate titrations must agree within 1 percent or 0.2 ml, whichever is greater.

4.3.3 Blanks. Prepare blanks by adding 2 to 4 drops of thorin indicator to 100 ml of 80 percent isopropanol. Titrate the blanks in the same manner as the samples.

4.4 Quality Control Procedures. Same as in Method 5, Section 4.4.

4.5 Audit Sample Analysis. Same as in Method 6, Section 4.4.

5. *Calibration*

5.1 Calibrate equipment using the procedures specified in the following sections of Method 5: Section 5.3 (metering system); Section 5.5 (temperature gauges); Section 5.7 (barometer). Note that the recommended leak-check of the metering system, described in Section 5.6 of Method 5, also applies to this method.

5.2 Standardize the barium perchlorate solution with 25 ml of standard sulfuric acid, to which 100 ml of 100 percent isopropanol has been added.

6. *Calculations*

NOTE: Carry out calculations retaining at least one extra decimal figure beyond that of the acquired data. Round off figures after final calculation.

6.1 Nomenclature.

A_n=Cross-sectional area of nozzle, m^2(ft^2).

B_{ws}=Water vapor in the gas stream, proportion by volume.

$C_{H_2SO_4}$=Sulfuric acid (including SO_3) concentration, g/dscm (lb/dscf).

C_{SO_2}=Sulfur dioxide concentration, g/dscm (lb/dscf).

I=Percent of isokinetic sampling.

N=Normality of barium perchlorate titrant, meq/ml.

P_{bar}=Barometric pressure at the sampling site, mm Hg (in. Hg).

P_s=Absolute stack gas pressure, mm Hg (in. Hg).

P_{std}=Standard absolute pressure, 760 mm Hg (29.92 in. Hg).
T_m=Average absolute dry gas meter temperature (see Figure 8–2), °K (°R).
T_s=Average absolute stack gas temperature (see Figure 8–2), °K (°R).
T_{std}=Standard absolute temperature, 293°K (528°R).
V_a=Volume of sample aliquot titrated, 100 ml for H_2SO_4 and 10 ml for SO_2.
V_{lc}=Total volume of liquid collected in impingers and silica gel, ml.
V_m=Volume of gas sample as measured by dry gas meter, dcm (dcf).
$V_{m(std)}$=Volume of gas sample measured by the dry gas meter corrected to standard conditions, dscm (dscf).
v_s=Average stack gas velocity, calculated by Method 2, Equation 2–9, using data obtained from Method 8, m/sec (ft/sec).
V_{soln}=Total volume of solution in which the sulfuric acid or sulfur dioxide sample is contained, 250 ml or 1,000 ml, respectively.
V_t=Volume of barium perchlorate titrant used for the sample, ml.
V_{tb}=Volume of barium perchlorate titrant used for the blank, ml.
Y=Dry gas meter calibration factor.
ΔH=Average pressure drop across orifice meter, mm (in.) H_2O.
θ=Total sampling time, min.
13.6=Specific gravity of mercury.
60=sec/min.
100=Conversion to percent.

6.2 Average Dry Gas Meter Temperature and Average Orifice Pressure Drop. See data sheet (Figure 8–2).

6.3 Dry Gas Volume. Correct the sample volume measured by the dry gas meter to standard conditions (20 °C and 760 mm Hg or 68 °F and 29.92 in. Hg) by using Equation 8–1.

$$V_{m(std)} = V_m Y \left(\frac{T_{std}}{T_m}\right) \frac{P_{bar} + \left(\frac{\Delta H}{13.6}\right)}{P_{std}} = K_1 V_m Y \frac{P_{bar} + (\Delta H/13.6)}{T_m}$$

Equation 8–1

Where:
K_1=0.3858 °K/mm Hg for metric units.
=17.64 °R/in., Hg for English units.

NOTE: If the leak rate observed during any mandatory leak-checks exceeds the specified acceptable rate, the tester shall either correct the value of V_m in Equation 8–1 (as described in Section 6.3 of Method 5), or shall invalidate the test run.

6.4 Volume of Water Vapor and Moisture Content. Calculate the volume of water vapor using Equation 5–2 of Method 5; the weight of water collected in the impingers and silica gel can be directly converted to milliliters (the specific gravity of water is 1 g/ml). Calculate the moisture content of the stack gas, using Equation 5–3 of Method 5. The ''Note'' in Section 6.5 of Method 5 also applies to this method. Note that if the effluent gas stream can be considered dry, the volume of water vapor and moisture content need not be calculated.

6.5 Sulfuric Acid Mist (including SO_3) Concentration.

$$C_{H_2SO_4} = K_2 \frac{N(V_t - V_{tb})\left(\frac{V_{soln}}{V_a}\right)}{V_{m(std)}}$$

Equation 8–2

Where:
K_2=0.04904 g/milliequivalent for metric units.
=1.081×10^{-4}lb/meq for English units.

6.6 Sulfur Dioxide Concentration.

$$C_{SO_2} = K_3 \frac{N(V_t - V_{tb})\left(\frac{V_{soln}}{V_a}\right)}{V_{m(std)}}$$

Equation 8–3

Where:
K_3=0.03203 g/meq for metric units.
=7.061×10^{-5} lb/meq for English units.

6.7 Isokinetic Variation.

6.7.1 Calculation from Raw Data.

$$I = \frac{100 T_s \left[K_4 V_{1c} + \left(V_m Y / T_m \right) / \left(P_{bar} + \Delta H / 13.6 \right) \right]}{60 \theta v_s P_s A_n} \qquad \text{Eq. 8-4}$$

Where:

K_4=0.003464 mm Hg-m³/ml-°K for metric units.

=0.002676 in. Hg-ft³/ml-°R for English units.

6.7.2 Calculation from Intermediate Values.

$$I = \frac{T_s V_{m(std)} P_{std} 100}{T_{std} v_s \theta A_n P_s 60 (1 - B_{ws})} = K_5 \frac{T_s V_{m(std)}}{P_s v_s A_n \theta (1 - B_{ws})}$$

Equation 8–5

where:

K_5=4.320 for metric units.

=0.09450 for English units

6.8 Acceptable Results. If 90 percent < I <110 percent, the results are acceptable. If the results are low in comparison to the standards and I is beyond the acceptable range, the Administrator may opt to accept the results. Use Citation 4 in the Bibliography of Method 5 to make judgments. Otherwise, reject the results and repeat the test.

6.9 Stack Gas Velocity and Volumetric Flow Rate. Calculate the average stack gas velocity and volumetric flow rate, if needed, using data obtained in this method and equations in Sections 5.2 and 5.3 of Method 2.

6.10 Relative Error (RE) for QA Audit Samples. Same as in Method 6, Section 6.4.

7. *Bibliography*

1. Atmospheric Emissions from Sulfuric Acid Manufacturing Processes. U.S. DHEW, PHS, Division of Air Pollution. Public Health Service Publication No. 999–AP–13. Cincinnati, OH. 1965.

2. Corbett, P. F. The Determination of SO_2 and SO_3 in Flue Gases. Journal of the Institute of Fuel. *24:*237–243. 1961.

3. Martin, Robert M. Construction Details of Isokinetic Source Sampling Equipment. Environmental Protection Agency. Research Triangle Park, NC. Air Pollution Control Office Publication No. APTD–0581. April, 1971.

4. Patton, W. F. and J. A. Brink, Jr. New Equipment and Techniques for Sampling Chemical Process Gases. Journal of Air Pollution Control Association. *13:*162. 1963.

5. Rom, J. J. Maintenance, Calibration, and Operation of Isokinetic Source-Sampling Equipment. Office of Air Programs, Environmental Protection Agency. Research Triangle Park, NC. APTD–0576. March, 1972.

6. Hamil, H. F. and D. E. Camann. Collaborative Study of Method for Determination of Sulfur Dioxide Emissions from Stationary Sources (Fossil Fuel-Fired Steam Generators). Environmental Protection Agency. Research Triangle Park, NC. EPA–650/4–74–024. December, 1973.

7. Annual Book of ASTM Standards. Part 31; Water, Atmospheric Analysis. pp. 40–42. American Society for Testing and Materials. Philadelphia, Pa. 1974.

METHOD 9—VISUAL DETERMINATION OF THE OPACITY OF EMISSIONS FROM STATIONARY SOURCES

Many stationary sources discharge visible emissions into the atmosphere; these emissions are usually in the shape of a plume. This method involves the determination of plume opacity by qualified observers. The method includes procedures for the training and certification of observers, and procedures to be used in the field for determination of plume opacity. The appearance of a plume as viewed by an observer depends upon a number of variables, some of which may be controllable and some of which may not be controllable in the field. Variables which can be controlled to an extent to which they no longer exert a significant influence upon plume appearance include: Angle of the observer with respect to the plume; angle of the observer with respect to the sun; point of observation of attached and detached steam plume; and angle of the observer with respect to a plume emitted from a rectangular stack with a large length to width ratio. The method includes specific criteria applicable to these variables.

Other variables which may not be controllable in the field are luminescence and color contrast between the plume and the background against which the plume is viewed. These variables exert an influence upon the appearance of a plume as viewed by an observer, and can affect the ability of the observer to accurately assign opacity values to the observed plume. Studies of the theory of plume opacity and field studies have demonstrated that a plume is most visible and presents the greatest apparent opacity when viewed against a contrasting background. It follows from this, and is confirmed by field trials, that the opacity of a plume, viewed under conditions where a contrasting background is present can be assigned with the greatest degree of accuracy. However, the potential for a positive error is also the greatest when a plume is viewed under such contrasting conditions. Under conditions presenting a less contrasting background, the apparent opacity of a plume is less and

approaches zero as the color and luminescence contrast decrease toward zero. As a result, significant negative bias and negative errors can be made when a plume is viewed under less contrasting conditions. A negative bias decreases rather than increases the possibility that a plant operator will be cited for a violation of opacity standards due to observer error.

Studies have been undertaken to determine the magnitude of positive errors which can be made by qualified observers while reading plumes under contrasting conditions and using the procedures set forth in this method. The results of these studies (field trials) which involve a total of 769 sets of 25 readings each are as follows:

(1) For black plumes (133 sets at a smoke generator), 100 percent of the sets were read with a positive error[1] of less than 7.5 percent opacity; 99 percent were read with a positive error of less than 5 percent opacity.

(2) For white plumes (170 sets at a smoke generator, 168 sets at a coal-fired power plant, 298 sets at a sulfuric acid plant), 99 percent of the sets were read with a positive error of less than 7.5 percent opacity; 95 percent were read with a positive error of less than 5 percent opacity.

The positive observational error associated with an average of twenty-five readings is therefore established. The accuracy of the method must be taken into account when determining possible violations of applicable opacity standards.

1. *Principle and Applicability*

1.1 Principle. The opacity of emissions from stationary sources is determined visually by a qualified observer.

1.2 Applicability. This method is applicable for the determination of the opacity of emissions from stationary sources pursuant to §60.11(b) and for qualifying observers for visually determining opacity of emissions.

2. *Procedures*

The observer qualified in accordance with section 3 of this method shall use the following procedures for visually determining the opacity of emissions:

2.1 Position. The qualified observer shall stand at a distance sufficient to provide a clear view of the emissions with the sun oriented in the 140° sector to his back. Consistent with maintaining the above requirement, the observer shall, as much as possible, make his observations from a position such that his line of vision is approximately perpendicular to the plume direction, and when observing opacity of emissions from rectangular outlets (e.g., roof monitors, open baghouses, noncircular stacks), approximately perpendicular to the longer axis of the outlet. The observer's line of sight should not include more than one plume at a time when multiple stacks are involved, and in any case the observer should make his observations with his line of sight perpendicular to the longer axis of such a set of multiple stacks (e.g., stub stacks on baghouses).

2.2 Field Records. The observer shall record the name of the plant, emission location, type facility, observer's name and affiliation, a sketch of the observer's position relative to the source, and the date on a field data sheet (Figure 9–1). The time, estimated distance to the emission location, approximate wind direction, estimated wind speed, description of the sky condition (presence and color of clouds), and plume background are recorded on a field data sheet at the time opacity readings are initiated and completed.

2.3 Observations. Opacity observations shall be made at the point of greatest opacity in that portion of the plume where condensed water vapor is not present. The observer shall not look continuously at the plume, but instead shall observe the plume momentarily at 15-second intervals.

2.3.1 Attached Steam Plumes. When condensed water vapor is present within the plume as it emerges from the emission outlet, opacity observations shall be made beyond the point in the plume at which condensed water vapor is no longer visible. The observer shall record the approximate distance from the emission outlet to the point in the plume at which the observations are made.

2.3.2 Detached Steam Plume. When water vapor in the plume condenses and becomes visible at a distinct distance from the emission outlet, the opacity of emissions should be evaluated at the emission outlet prior to the condensation of water vapor and the formation of the steam plume.

2.4 Recording Observations. Opacity observations shall be recorded to the nearest 5 percent at 15-second intervals on an observational record sheet. (See Figure 9–2 for an example.) A minimum of 24 observations shall be recorded. Each momentary observation recorded shall be deemed to represent the average opacity of emissions for a 15-second period.

2.5 Data Reduction. Opacity shall be determined as an average of 24 consecutive observations recorded at 15-second intervals. Divide the observations recorded on the record sheet into sets of 24 consecutive observations. A set is composed of any 24 consecutive observations. Sets need not be consecutive in time and in no case shall two sets overlap. For each set of 24 observations, calculate the average by summing the opacity of the 24 observations and dividing this sum

[1] For a set, positive error = average opacity determined by observers' 25 observations—average opacity determined from transmissometer's 25 recordings.

by 24. If an applicable standard specifies an averaging time requiring more than 24 observations, calculate the average for all observations made during the specified time period. Record the average opacity on a record sheet. (See Figure 9–1 for an example.)

3. *Qualifications and Testing*

3.1 Certification Requirements. To receive certification as a qualified observer, a candidate must be tested and demonstrate the ability to assign opacity readings in 5 percent increments to 25 different black plumes and 25 different white plumes, with an error not to exceed 15 percent opacity on any one reading and an average error not to exceed 7.5 percent opacity in each category. Candidates shall be tested according to the procedures described in section 3.2. Smoke generators used pursuant to section 3.2 shall be equipped with a smoke meter which meets the requirements of section 3.3.

The certification shall be valid for a period of 6 months, at which time the qualification procedure must be repeated by any observer in order to retain certification.

3.2 Certification Procedure. The certification test consists of showing the candidate a complete run of 50 plumes—25 black plumes and 25 white plumes—generated by a smoke generator. Plumes within each set of 25 black and 25 white runs shall be presented in random order. The candidate assigns an opacity value to each plume and records his observation on a suitable form. At the completion of each run of 50 readings, the score of the candidate is determined. If a candidate fails to qualify, the complete run of 50 readings must be repeated in any retest. The smoke test may be administered as part of a smoke school or training program, and may be preceded by training or familiarization runs of the smoke generator during which candidates are shown black and white plumes of known opacity.

3.3 Smoke Generator Specifications. Any smoke generator used for the purposes of section 3.2 shall be equipped with a smoke meter installed to measure opacity across the diameter of the smoke generator stack. The smoke meter output shall display instack opacity based upon a pathlength equal to the stack exit diameter, on a full 0 to 100 percent chart recorder scale. The smoke meter optical design and performance shall meet the specifications shown in Table 9–1. The smoke meter shall be calibrated as prescribed in section 3.3.1 prior to the conduct of each smoke reading test. At the completion of each test, the zero and span drift shall be checked and if the drift exceeds ±1 percent opacity, the condition shall be corrected prior to conducting any subsequent test runs. The smoke meter shall be demonstrated, at the time of installation, to meet the specifications listed in Table 9–1. This demonstration shall be repeated following any subsequent repair or replacement of the photocell or associated electronic circuitry including the chart recorder or output meter, or every 6 months, whichever occurs first.

TABLE 9–1—SMOKE METER DESIGN AND PERFORMANCE SPECIFICATIONS

Parameter	Specification
a. Light source	Incandescent lamp operated at nominal rated voltage.
b. Spectral response of photocell.	Photopic (daylight spectral response of the human eye—Citation 3).
c. Angle of view	15° maximum total angle.
d. Angle of projection	15° maximum total angle.
e. Calibration error	±3% opacity, maximum.
f. Zero and span drift	±1% opacity, 30 minutes
g. Response time	5 seconds.

3.3.1 Calibration. The smoke meter is calibrated after allowing a minimum of 30 minutes warmup by alternately producing simulated opacity of 0 percent and 100 percent. When stable response at 0 percent or 100 percent is noted, the smoke meter is adjusted to produce an output of 0 percent or 100 percent, as appropriate. This calibration shall be repeated until stable 0 percent and 100 percent readings are produced without adjustment. Simulated 0 percent and 100 percent opacity values may be produced by alternately switching the power to the light source on and off while the smoke generator is not producing smoke.

3.3.2 Smoke Meter Evaluation. The smoke meter design and performance are to be evaluated as follows:

3.3.2.1 Light Source. Verify from manufacturer's data and from voltage measurements made at the lamp, as installed, that the lamp is operated within ±5 percent of the nominal rated voltage.

3.3.2.2 Spectral Response of Photocell. Verify from manufacturer's data that the photocell has a photopic response; i.e., the spectral sensitivity of the cell shall closely approximate the standard spectral-luminosity curve for photopic vision which is referenced in (b) of Table 9–1.

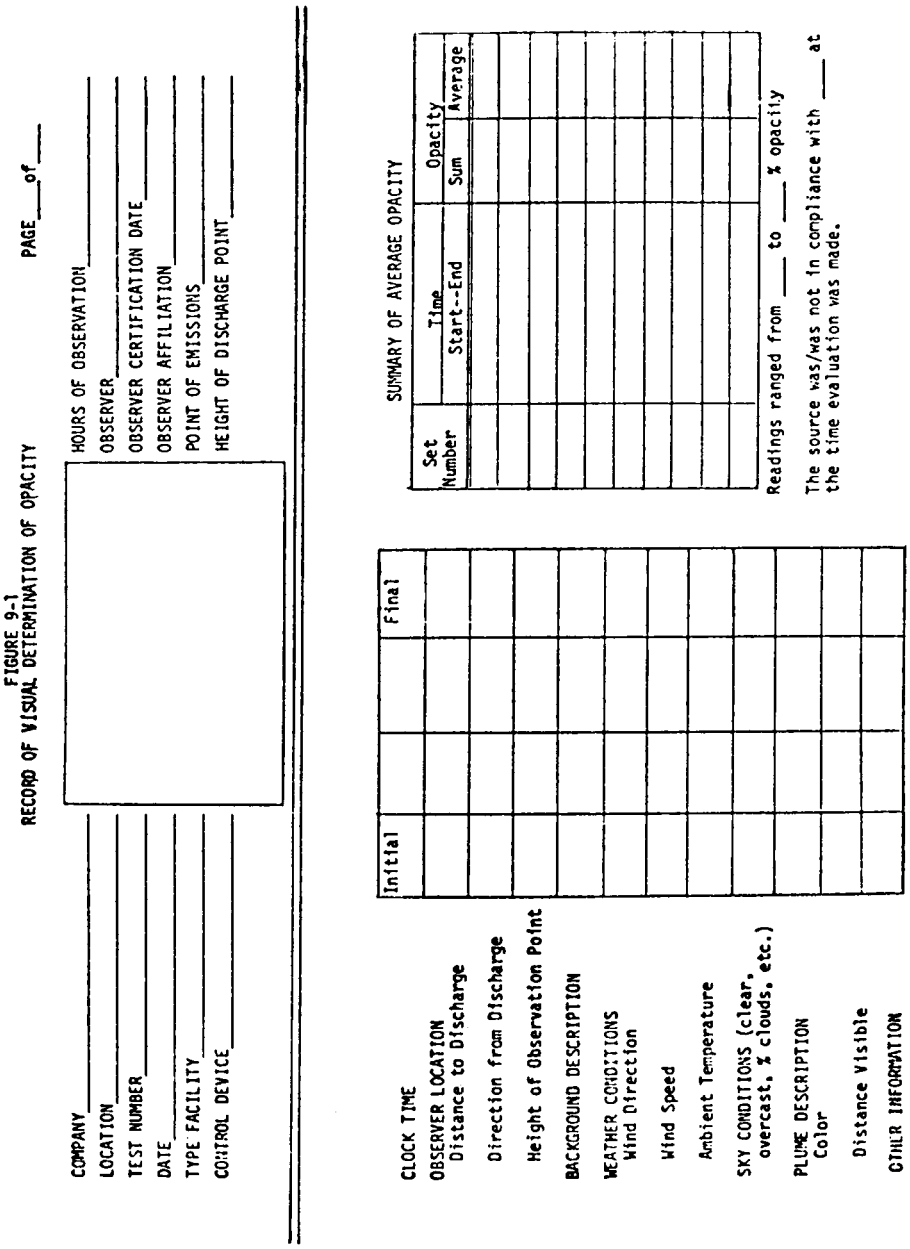

FIGURE 9–2—OBSERVATION RECORD

Page of

Company .....
Location .....
Test Number .....
Date.

Observer .....
Type facility .....
Point of emissions .....

Hr.	Min.	Seconds				Steam plume (check if applicable)		Comments
		0	15	30	45	Attached	Detached	
	0							
	1							
	2							
	3							
	4							
	5							
	6							
	7							
	8							
	9							
	10							
	11							
	12							
	13							
	14							
	15							
	16							
	17							
	18							
	19							
	20							
	21							
	22							
	23							
	24							
	25							
	26							
	27							
	28							
	29							

FIGURE 9–2—OBSERVATION RECORD—(CONTINUED)

Page of

Company .....
Location .....
Test Number .....
Date.

Observer .....
Type facility .....
Point of emissions .....

Hr.	Min.	Seconds				Steam plume (check if applicable)		Comments
		0	15	30	45	Attached	Detached	
	30							

Hr.	Min.	Seconds				Steam plume (check if applicable)		Comments
		0	15	30	45	Attached	Detached	
	31							
	32							
	33							
	34							
	35							
	36							
	37							
	38							
	39							
	40							
	41							
	42							
	43							
	44							
	45							
	46							
	47							
	48							
	49							
	50							
	51							
	52							
	53							
	54							
	55							
	56							
	57							
	58							
	59							

3.3.2.3 Angle of View. Check construction geometry to ensure that the total angle of view of the smoke plume, as seen by the photocell, does not exceed 15°. The total angle of view may be calculated from: $\theta = 2 \tan^{-1} d/2L$, where θ=total angle of view; d=the sum of the photocell diameter+the diameter of the limiting aperture; and L=the distance from the photocell to the limiting aperture. The limiting aperture is the point in the path between the photocell and the smoke plume where the angle of view is most restricted. In smoke generator smoke meters this is normally an orifice plate.

3.3.2.4 Angle of Projection. Check construction geometry to ensure that the total angle of projection of the lamp on the smoke plume does not exceed 15°. The total angle of projection may be calculated from: $\theta = 2 \tan^{-1} d/2L$, where θ= total angle of projection; d= the sum of the length of the lamp

filament + the diameter of the limiting aperture; and L= the distance from the lamp to the limiting aperture.

3.3.2.5 Calibration Error. Using neutral-density filters of known opacity, check the error between the actual response and the theoretical linear response of the smoke meter. This check is accomplished by first calibrating the smoke meter according to 3.3.1 and then inserting a series of three neutral-density filters of nominal opacity of 20, 50, and 75 percent in the smoke meter pathlength. Filters calibrated within ±2 percent shall be used. Care should be taken when inserting the filters to prevent stray light from affecting the meter. Make a total of five nonconsecutive readings for each filter. The maximum error on any one reading shall be 3 percent opacity.

3.3.2.6 Zero and Span Drift. Determine the zero and span drift by calibrating and operating the smoke generator in a normal manner over a 1-hour period. The drift is measured by checking the zero and span at the end of this period.

3.3.2.7 Response Time. Determine the response time by producing the series of five simulated 0 percent and 100 percent opacity values and observing the time required to reach stable response. Opacity values of 0 percent and 100 percent may be simulated by alternately switching the power to the light source off and on while the smoke generator is not operating.

4. *Bibliography.*

1. Air Pollution Control District Rules and Regulations, Los Angeles County Air Pollution Control District, Regulation IV, Prohibitions, Rule 50.

2. Weisburd, Melvin I., Field Operations and Enforcement Manual for Air, U.S. Environmental Protection Agency, Research Triangle Park, NC. APTD–1100, August 1972, pp. 4.1–4.36.

3. Condon, E.U., and Odishaw, H., Handbook of Physics, McGraw-Hill Co., New York, NY, 1958, Table 3.1, p. 6–52.

ALTERNATE METHOD 1—DETERMINATION OF THE OPACITY OF EMISSIONS FROM STATIONARY SOURCES REMOTELY BY LIDAR

This alternate method provides the quantitative determination of the opacity of an emissions plume remotely by a mobile lidar system (laser radar; Light Detection and Ranging). The method includes procedures for the calibration of the lidar and procedures to be used in the field for the lidar determination of plume opacity. The lidar is used to measure plume opacity during either day or nighttime hours because it contains its own pulsed light source or transmitter. The operation of the lidar is not dependent upon ambient lighting conditions (light, dark, sunny or cloudy).

The lidar mechanism or technique is applicable to measuring plume opacity at numerous wavelengths of laser radiation. However, the performance evaluation and calibration test results given in support of this method apply only to a lidar that employs a ruby (red light) laser [Reference 5.1].

1. *Principle and Applicability*

1.1 Principle. The opacity of visible emissions from stationary sources (stacks, roof vents, etc.) is measured remotely by a mobile lidar (laser radar).

1.2 Applicability. This method is applicable for the remote measurement of the opacity of visible emissions from stationary sources during both nighttime and daylight conditions, pursuant to 40 CFR §60.11(b). It is also applicable for the calibration and performance verification of the mobile lidar for the measurement of the opacity of emissions. A performance/design specification for a basic lidar system is also incorporated into this method.

1.3 Definitions.

Azimuth angle: The angle in the horizontal plane that designates where the laser beam is pointed. It is measured from an arbitrary fixed reference line in that plane.

Backscatter: The scattering of laser light in a direction opposite to that of the incident laser beam due to reflection from particulates along the beam's atmospheric path which may include a smoke plume.

Backscatter signal: The general term for the lidar return signal which results from laser light being backscattered by atmospheric and smoke plume particulates.

Convergence distance: The distance from the lidar to the point of overlap of the lidar receiver's field-of-view and the laser beam.

Elevation angle: The angle of inclination of the laser beam referenced to the horizontal plane.

Far region: The region of the atmosphere's path along the lidar line-of-sight beyond or behind the plume being measured.

Lidar: Acronym for Light Detection and Ranging.

Lidar range: The range or distance from the lidar to a point of interest along the lidar line-of-sight.

Near region: The region of the atmospheric path along the lidar line-of-sight between the lidar's convergence distance and the plume being measured.

Opacity: One minus the optical transmittance of a smoke plume, screen target, etc.

Pick interval: The time or range intervals in the lidar backscatter signal whose minimum average amplitude is used to calculate opacity. Two pick intervals are required, one in the near region and one in the far region.

Plume: The plume being measured by lidar.

Plume signal: The backscatter signal resulting from the laser light pulse passing through a plume.

$1/R^2$correction: The correction made for the systematic decrease in lidar backscatter signal amplitude with range.

Reference signal: The backscatter signal resulting from the laser light pulse passing through ambient air.

Sample interval: The time period between successive samples for a digital signal or between successive measurements for an analog signal.

Signal spike: An abrupt, momentary increase and decrease in signal amplitude.

Source: The source being tested by lidar.

Time reference: The time (t_o) when the laser pulse emerges from the laser, used as the reference in all lidar time or range measurements.

2. *Procedures*

The mobile lidar calibrated in accordance with Paragraph 3 of this method shall use the following procedures for remotely measuring the opacity of stationary source emissions:

2.1 Lidar Position. The lidar shall be positioned at a distance from the plume sufficient to provide an unobstructed view of the source emissions. The plume must be at a range of at least 50 meters or three consecutive pick intervals (whichever is greater) from the lidar's transmitter/receiver convergence distance along the line-of-sight. The maximum effective opacity measurement distance of the lidar is a function of local atmospheric conditions, laser beam diameter, and plume diameter. The test position of the lidar shall be selected so that the diameter of the laser beam at the measurement point within the plume shall be no larger than three-fourths the plume diameter. The beam diameter is calculated by Equation (AM1–1):

$$D(\text{lidar}) = A + R\phi \leq 0.75\ D(\text{Plume}) \quad \text{(AM1–1)}$$

Where:

D(Plume)=diameter of the plume (cm),
ϕ=laser beam divergence measured in radians
R=range from the lidar to the source (cm)
D(Lidar)=diameter of the laser beam at range R (cm),
A=diameter of the laser beam or pulse where it leaves the laser.

The lidar range, R, is obtained by aiming and firing the laser at the emissions source structure immediately below the outlet. The range value is then determined from the backscatter signal which consists of a signal spike (return from source structure) and the atmospheric backscatter signal [Reference 5.1]. This backscatter signal should be recorded.

When there is more than one source of emissions in the immediate vicinity of the plume, the lidar shall be positioned so that the laser beam passes through only a single plume, free from any interference of the other plumes for a minimum of 50 meters or three consecutive pick intervals (whichever is greater) in each region before and beyond the plume along the line-of-sight (determined from the backscatter signals). The lidar shall initially be positioned so that its line-of-sight is approximately perpendicular to the plume.

When measuring the opacity of emissions from rectangular outlets (e.g., roof monitors, open baghouses, noncircular stacks, etc.), the lidar shall be placed in a position so that its line-of-sight is approximately perpendicular to the longer (major) axis of the outlet.

2.2 Lidar Operational Restrictions. The lidar receiver shall not be aimed within an angle of ± 15° (cone angle) of the sun.

This method shall not be used to make opacity measurements if thunderstorms, snowstorms, hail storms, high wind, high-ambient dust levels, fog or other atmospheric conditions cause the reference signals to consistently exceed the limits specified in Section 2.3.

2.3 Reference Signal Requirements. Once placed in its proper position for opacity measurement, the laser is aimed and fired with the line-of-sight near the outlet height and rotated horizontally to a position clear of the source structure and the associated plume. The backscatter signal obtained from this position is called the ambient-air or reference signal. The lidar operator shall inspect this signal [Section V of Reference 5.1] to: (1) determine if the lidar line-of-sight is free from interference from other plumes and from physical obstructions such as cables, power lines, etc., for a minimum of 50 meters or three consecutive pick intervals (whichever is greater) in each region before and beyond the plume, and (2) obtain a qualitative measure of the homogeneity of the ambient air by noting any signal spikes.

Should there be any signal spikes on the reference signal within a minimum of 50 meters or three consecutive pick intervals (whichever is greater) in each region before and beyond the plume, the laser shall be fired three more times and the operator shall inspect the reference signals on the display. If the spike(s) remains, the azimuth angle shall be changed and the above procedures conducted again. If the spike(s) disappears in all three reference signals, the lidar line-of-sight is acceptable if there is shot-to-shot consistency and there is no interference from other plumes.

Shot-to-shot consistency of a series of reference signals over a period of twenty seconds is verified in either of two ways. (1) The lidar operator shall observe the reference signal amplitudes. For shot-to-shot consistency the ratio of R_f to R_n [amplitudes of the near and far region pick intervals (Section 2.6.1)] shall vary by not more than ± 6% between shots; or (2) the lidar operator shall accept any one of the reference signals and treat the other two as plume signals; then

the opacity for each of the subsequent reference signals is calculated (Equation AM1–2). For shot-to-shot consistency, the opacity values shall be within ±3% of 0% opacity and the associated S_o values less than or equal to 8% (full scale) [Section 2.6].

If a set of reference signals fails to meet the requirements of this section, then all plume signals [Section 2.4] from the last set of acceptable reference signals to the failed set shall be discarded.

2.3.1 Initial and Final Reference Signals. Three reference signals shall be obtained within a 90-second time period prior to any data run. A final set of three reference signals shall be obtained within three (3) minutes after the completion of the same data run.

2.3.2 Temporal Criterion for Additional Reference Signals. An additional set of reference signals shall be obtained during a data run if there is a change in wind direction or plume drift of 30° or more from the direction that was prevalent when the last set of reference signals was obtained. An additional set of reference signals shall also be obtained if there is an increase in value of S_{In} (near region standard deviation, Equation AM1–5) or S_{If} (far region standard deviation, Equation AM1–6) that is greater than 6% (full scale) over the respective values calculated from the immediately previous plume signal, and this increase in value remains for 30 seconds or longer. An additional set of reference signals shall also be obtained if there is a change in amplitude in either the near or the far region of the plume signal, that is greater than 6% of the near signal amplitude and this change in amplitude remains for 30 seconds or more.

2.4 Plume Signal Requirements. Once properly aimed, the lidar is placed in operation with the nominal pulse or firing rate of six pulses/minute (1 pulse/10 seconds). The lidar operator shall observe the plume backscatter signals to determine the need for additional reference signals as required by Section 2.3.2. The plume signals are recorded from lidar start to stop and are called a data run. The length of a data run is determined by operator discretion. Short-term stops of the lidar to record additional reference signals do not constitute the end of a data run if plume signals are resumed within 90 seconds after the reference signals have been recorded, and the total stop or interrupt time does not exceed 3 minutes.

2.4.1 Non-hydrated Plumes. The laser shall be aimed at the region of the plume which displays the greatest opacity. The lidar operator must visually verify that the laser is aimed clearly above the source exit structure.

2.4.2 Hydrated Plumes. The lidar will be used to measure the opacity of hydrated or so-called steam plumes. As listed in the reference method, there are two types, i.e., attached and detached steam plumes.

2.4.2.1 Attached Steam Plumes. When condensed water vapor is present within a plume, lidar opacity measurements shall be made at a point within the residual plume where the condensed water vapor is no longer visible. The laser shall be aimed into the most dense region (region of highest opacity) of the residual plume.

During daylight hours the lidar operator locates the most dense portion of the residual plume visually. During nighttime hours a high-intensity spotlight, night vision scope, or low light level TV, etc., can be used as an aid to locate the residual plume. If visual determination is ineffective, the lidar may be used to locate the most dense region of the residual plume by repeatedly measuring opacity, along the longitudinal axis or center of the plume from the emissions outlet to a point just beyond the steam plume. The lidar operator should also observe color differences and plume reflectivity to ensure that the lidar is aimed completely within the residual plume. If the operator does not obtain a clear indication of the location of the residual plume, this method shall not be used.

Once the region of highest opacity of the residual plume has been located, aiming adjustments shall be made to the laser line-of-sight to correct for the following: movement to the region of highest opacity out of the lidar line-of-sight (away from the laser beam) for more than 15 seconds, expansion of the steam plume (air temperature lowers and/or relative humidity increases) so that it just begins to encroach on the field-of-view of the lidar's optical telescope receiver, or a decrease in the size of the steam plume (air temperature higher and/or relative humidity decreases) so that regions within the residual plume whose opacity is higher than the one being monitored, are present.

2.4.2.2 Detached Steam Plumes. When the water vapor in a hydrated plume condenses and becomes visible at a finite distance from the stack or source emissions outlet, the opacity of the emissions shall be measured in the region of the plume clearly above the emissions outlet and below condensation of the water vapor.

During daylight hours the lidar operators can visually determine if the steam plume is detached from the stack outlet. During nighttime hours a high-intensity spotlight, night vision scope, low light level TV, etc., can be used as an aid in determining if the steam plume is detached. If visual determination is ineffective, the lidar may be used to determine if the steam plume is detached by repeatedly measuring plume opacity from the outlet to the steam plume along the plume's longitudinal axis or center line. The lidar operator should also observe color differences and plume reflectivity to detect a

detached plume. If the operator does not obtain a clear indication of the location of the detached plume, this method shall not be used to make opacity measurements between the outlet and the detached plume.

Once the determination of a detached steam plume has been confirmed, the laser shall be aimed into the region of highest opacity in the plume between the outlet and the formation of the steam plume. Aiming adjustments shall be made to the lidar's line-of-sight within the plume to correct for changes in the location of the most dense region of the plume due to changes in wind direction and speed or if the detached steam plume moves closer to the source outlet encroaching on the most dense region of the plume. If the detached steam plume should move too close to the source outlet for the lidar to make interference-free opacity measurements, this method shall not be used.

2.5 Field Records. In addition to the recording recommendations listed in other sections of this method the following records should be maintained. Each plume measured should be uniquely identified. The name of the facility, type of facility, emission source type, geographic location of the lidar with respect to the plume, and plume characteristics should be recorded. The date of the test, the time period that a source was monitored, the time (to the nearest second) of each opacity measurement, and the sample interval should also be recorded. The wind speed, wind direction, air temperature, relative humidity, visibility (measured at the lidar's position), and cloud cover should be recorded at the beginning and end of each time period for a given source. A small sketch depicting the location of the laser beam within the plume should be recorded.

If a detached or attached steam plume is present at the emissions source, this fact should be recorded. Figures AM1–I and AM1–II are examples of logbook forms that may be used to record this type of data. Magnetic tape or paper tape may also be used to record data.

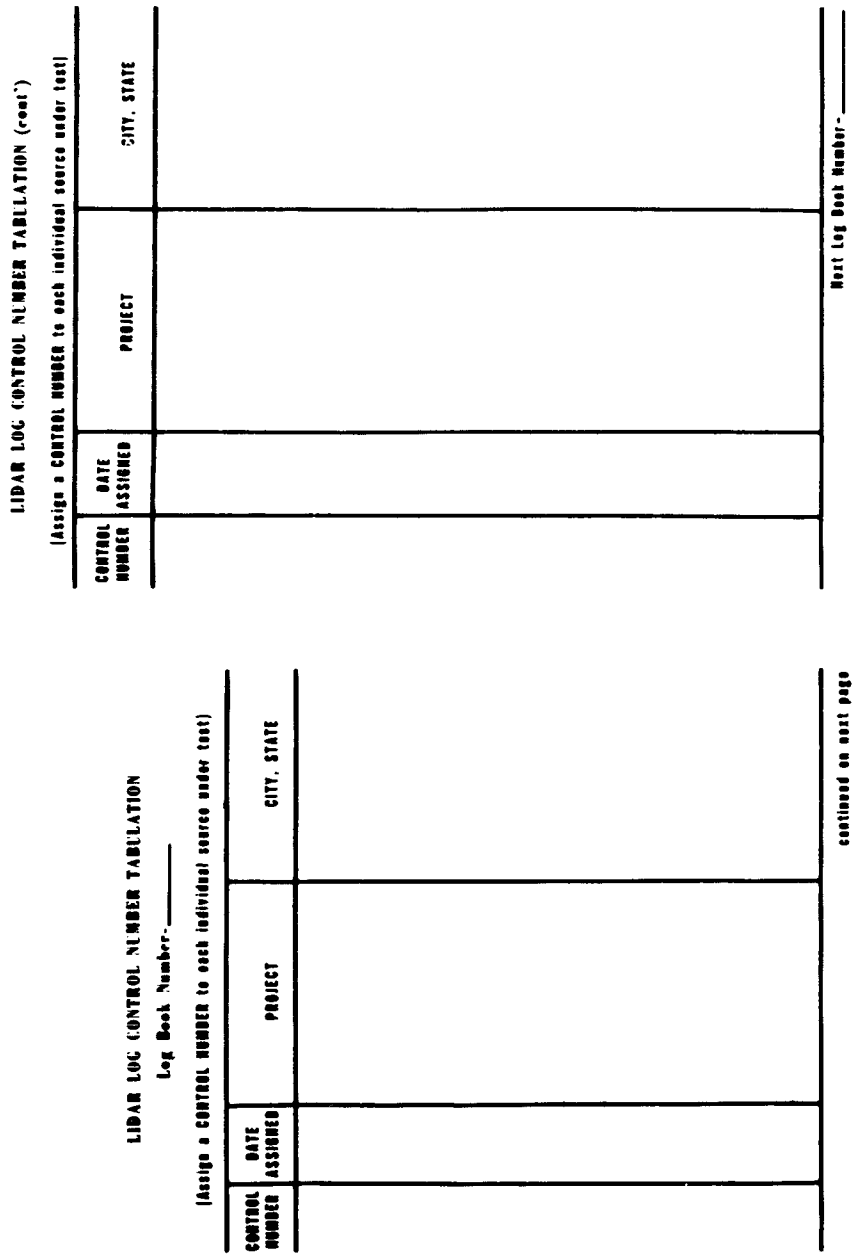

Figure AM1-1 Lidar Log Control Number Tabulation

Figure AM1-11 Lidar Log Of Operations

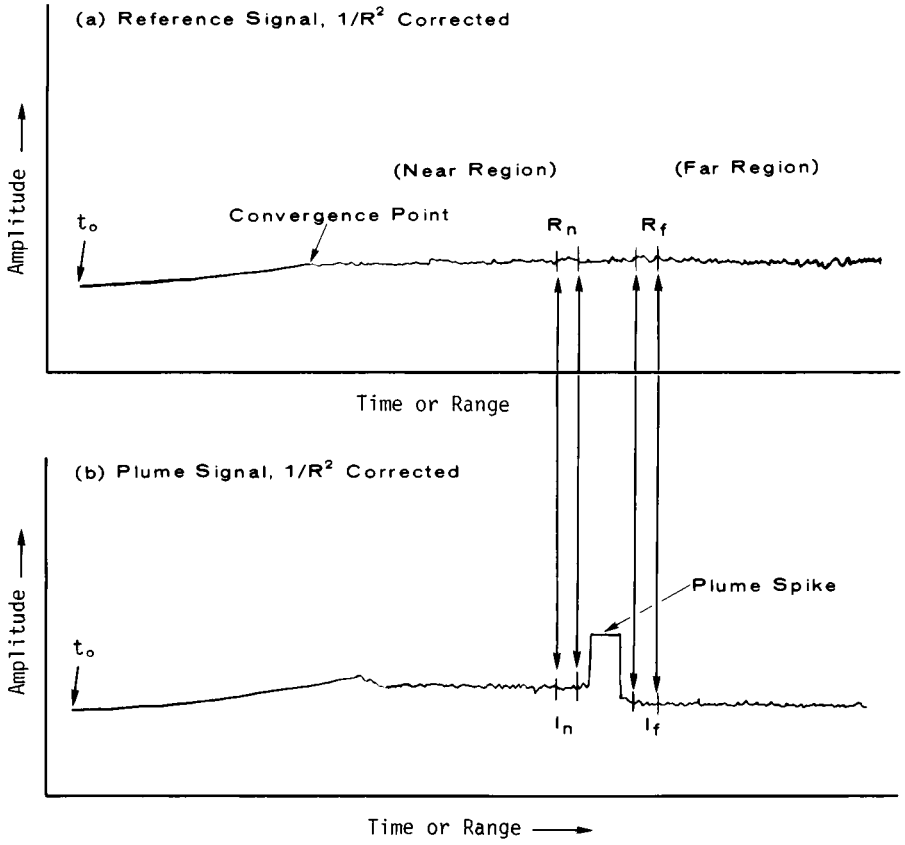

(a) Reference signal, $1/R^2$-corrected. This reference signal is for plume signal (b). R_n, R_f are chosen to coincide with I_n, I_f.

(b) Plume signal, $1/R^2$-corrected. The plume spike and the decrease in the backscatter signal amplitude in the far region are due to the opacity of the plume. I_n, I_f are chosen as indicated in Section 2.6.

Figure AM1-III. Plots of Lidar Backscatter Signals

2.6 Opacity Calculation and Data Analysis. Referring to the reference signal and plume signal in Figure AM1–III, the measured opacity (O_p) in percent for each lidar measurement is calculated using Equation AM1–2. ($O_p=1-T_p$; T_p is the plume transmittance.)

$$O_p = (100\%)\left[1 - \left(\frac{I_f}{R_f}\frac{R_n}{I_n}\right)^{\frac{1}{2}}\right], \qquad \text{(AM1-2)}$$

Where:

I_n=near-region pick interval signal amplitude, plume signal, $1/R^2$corrected,

I_f=far-region pick interval signal amplitude, plume signal, $1/R^2$corrected,

R_n=near-region pick interval signal amplitude, reference signal, $1/R^2$corrected, and

R_f=far-region pick interval signal amplitude, reference signal, $1/R^2$corrected.

The $1/R^2$ correction to the plume and reference signal amplitudes is made by multiplying the amplitude for each successive sample interval from the time reference, by the square of the lidar time (or range) associated with that sample interval [Reference 5.1].

The first step in selecting the pick intervals for Equation AM1–2 is to divide the plume signal amplitude by the reference signal amplitude at the same respective ranges to obtain a ''normalized'' signal. The pick intervals selected using this normalized signal, are a minimum of 15 m (100 nanoseconds) in length and consist of at least 5 contiguous sample intervals. In addition, the following criteria, listed in order of importance, govern pick interval selection. (1) The intervals shall be in a region of the normalized signal where the reference signal meets the requirements of Section 2.3 and is everywhere greater than zero. (2) The intervals (near and far) with the minimum average amplitude are chosen. (3) If more than one interval with the same minimum average amplitude is found, the interval closest to the plume is chosen. (4) The standard deviation, S_o, for the calculated opacity shall be 8% or less. (S_o is calculated by Equation AM1–7).

If S_o is greater than 8%, then the far pick interval shall be changed to the next interval of minimal average amplitude. If S_o is still greater than 8%, then this procedure is repeated for the far pick interval. This procedure may be repeated once again for the near pick interval, but if S_o remains greater than 8%, the plume signal shall be discarded.

The reference signal pick intervals, R_n and R_f, must be chosen over the same time interval as the plume signal pick intervals, I_n and I_f, respectively [Figure AM1–III]. Other methods of selecting pick intervals may be used if they give equivalent results. Field-oriented examples of pick interval selection are available in Reference 5.1.

The average amplitudes for each of the pick intervals, I_n, I_f, R_n, R_f, shall be calculated by averaging the respective individual amplitudes of the sample intervals from the plume signal and the associated reference signal each corrected for $1/R^2$. The amplitude of I_n shall be calculated according to Equation (AM–3).

$$I_n = \frac{1}{m}\sum_{i=1}^{m} I_{ni}, \qquad \text{(AM1-3)}$$

Where:

I_{ni}=the amplitude of the ith sample interval (near-region),

Σ=sum of the individual amplitudes for the sample intervals,

m=number of sample intervals in the pick interval, and

I_n=average amplitude of the near-region pick interval.

Similarly, the amplitudes for I_f, R_n, and R_f are calculated with the three expressions in Equation (AM1–4).

$$I_f = \frac{1}{m}\sum_{i=1}^{m} I_{fi}, \quad R_n = \frac{1}{m}\sum_{i=1}^{m} R_{ni}, \quad R_f = \frac{1}{m}\sum_{i=1}^{m} R_{fi}. \qquad \text{(AM1-4)}$$

The standard deviation, S_{In}, of the set of amplitudes for the near-region pick interval, I_n, shall be calculated using Equation (AM1–5).

Similarly, the standard deviations S_{If}, S_{Rn}, and S_{Rf} are calculated with the three expressions in Equation (AM1–6).

$$S_{In} = \left[\sum_{i=1}^{m} \frac{(I_{ni} - I_n)^2}{(m-1)} \right]^{1/2} . \qquad S_{If} = \left[\sum_{i=1}^{m} \frac{(I_{fi} - I_f)^2}{(m-1)} \right]^{1/2}$$

(AM1-5)

$$S_{Rn} = \left[\sum_{i=1}^{m} \frac{(R_{ni} - R_n)^2}{(m-1)} \right]^{1/2} ,$$

$$S_{Rf} = \left[\sum_{i=1}^{m} \frac{(R_{fi} - R_f)^2}{(m-1)} \right]^{1/2} .$$

(AM1-6)

The standard deviation, S_o, for each associated opacity value, O_p, shall be calculated using Equation (AM1–7).

$$S_o = \frac{(100\%)}{2} \left(\frac{I_f}{R_f} \frac{R_n}{I_n} \right)^{1/2} \left[\frac{S_{In}^2}{I_n^2} + \frac{S_{If}^2}{I_f^2} + \frac{S_{Rn}^2}{R_n^2} + \frac{S_{Rf}^2}{R_f^2} \right]^{1/2}$$

(AM1-7)

The calculated values of I_n, I_f, R_n, R_f, S_{In}, S_{If}, S_{Rn}, S_{Rf}, O_p, and S_o should be recorded. Any plume signal with an S_o greater than 8% shall be discarded.

2.6.1 Azimuth Angle Correction. If the azimuth angle correction to opacity specified in this section is performed, then the elevation angle correction specified in Section 2.6.2 shall not be performed. When opacity is measured in the residual region of an attached steam plume, and the lidar line-of-sight is not perpendicular to the plume, it may be necessary to correct the opacity measured by the lidar to obtain the opacity that would be measured on a path perpendicular to the plume. The following method, or any other method which produces equivalent results, shall be used to determine the need for a correction, to calculate the correction, and to document the point within the plume at which the opacity was measured.

Figure AM1–IV(b) shows the geometry of the opacity correction. L′ is the path through the plume along which the opacity measurement is made. P′ is the path perpendicular to the plume at the same point. The angle ε is the angle between L′ and the plume center line. The angle (π/2-ε), is the angle between the L′ and P′. The measured opacity, O_p, measured along the path L′ shall be corrected to obtain the corrected opacity, O_{pc}, for the path P′, using Equation (AM1–8).

$$O_{pc} = (100\%) \left[1 - (1 - 0.01\, O_p)^{\cos(\pi/2-\varepsilon)} \right]$$

$$= (100\%) \left[1 - (1 - 0.01\, O_p)^{\sin \varepsilon} \right] \qquad \text{(AM1-8)}$$

The correction in Equation (AM1–8) shall be performed if the inequality in Equation (AM1–9) is true.

$$\varepsilon \geq \sin^{-1}\left[\frac{\ln(101 - O_p)}{\ln(100 - O_p)}\right] \qquad \text{(AM1-9)}$$

Figure AM1–IV(a) shows the geometry used to calculate ε and the position in the plume at which the lidar measurement is made. This analysis assumes that for a given lidar measurement, the range from the lidar to the plume, the elevation angle of the lidar from the horizontal plane, and the azimuth angle of the lidar from an arbitrary fixed reference in the horizontal plane can all be obtained directly.

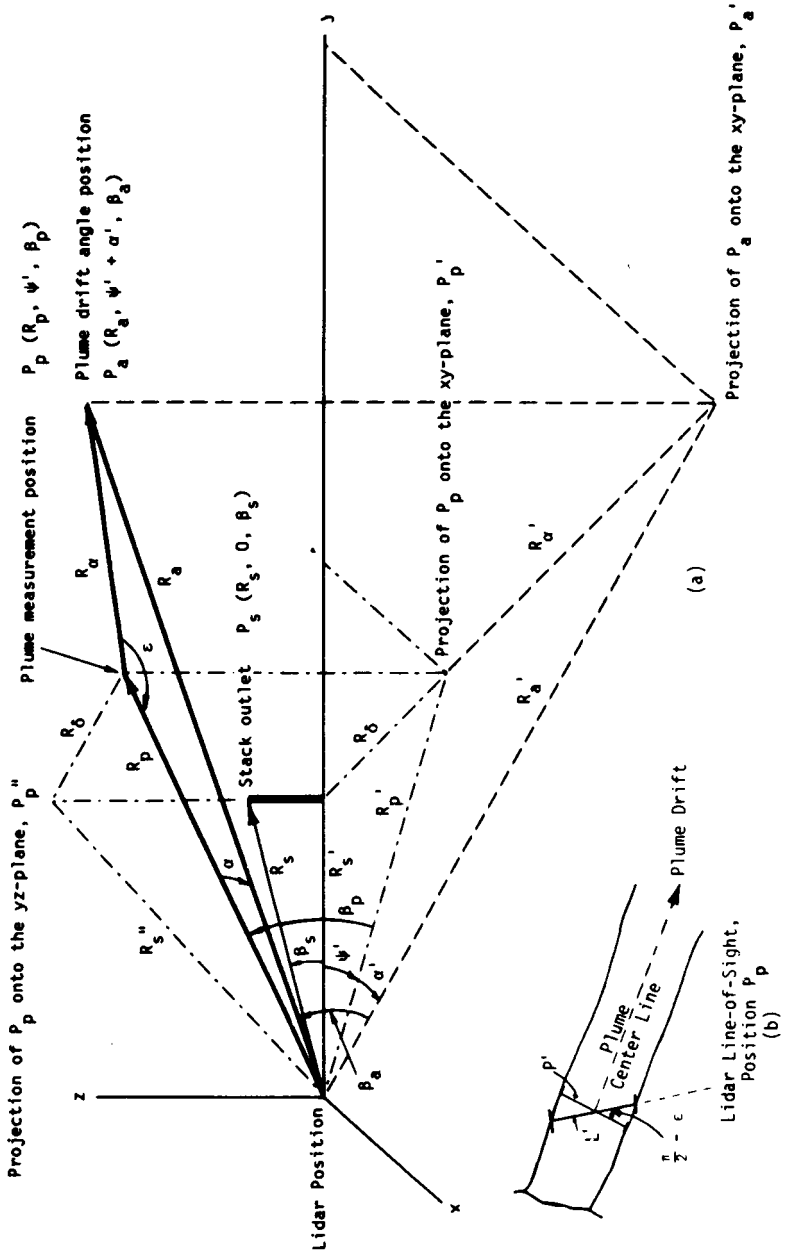

Figure AMI - IV. Correction in Opacity for Drift of the Residual Region of an Attached Steam Plume.

R_s=range from lidar to source* .....
β_s=elevation angle of R_s* .....
R_p=range from lidar to plume at the opacity measurement point* .....
β_p=elevation angle of R_p* .....
R_a=range from lidar to plume at some arbitrary point, P_a, so the drift angle of the plume can be determined* .....
β_a=elevation angle of R_a* .....
α=angle between R_p and R_a .....
R'_s=projection of R_s in the horizontal plane .....
R'_p=projection of R_p in the horizontal plane .....

R'_a=projection of R_a in the horizontal plane
ψ'=angle between R'_s and R'_p* .....
α'=angle between R'_p and R'_a* .....
R≤=distance from the source to the opacity measurement point projected in the horizontal plane .....
Rθ=distance from opacity measurement point P_p to the point in the plume P_a. .....

$$O_{pc} = 1 - (1 - O_p)^{Cos\ (\pi/2-\varepsilon)} = 1 - (1 - O_p)^{Sin\ \varepsilon} \qquad \text{(AMI-8)}$$

The correction angle ε shall be determined using Equation AM1–10.

Where:

$\alpha=Cos^{-1}\ (Cos\beta_p\ Cos\beta_a\ Cos\alpha'+Sin\beta_p\ Sin\beta_a)$,

and

$R\theta=(R_p2+R_a2-2\ R_p\ R_a\ Cos\alpha)^{1/2}$

R≤, the distance from the source to the opacity measurement point projected in the horizontal plane, shall be determined using Equation AM1–11.

$$R_\delta = (R'^2_s + R'^2_p - 2R'_sR'_pCos\psi')^{\frac{1}{2}}, \qquad \text{(AM1-11)}$$

Where:

$R'_s=R_s\ Cos\ \beta_s$, and

$R'_p=R_p\ Cos\ \beta_p$.

In the special case where the plume centerline at the opacity measurement point is horizontal, parallel to the ground, Equation AM1–12 may be used to determine ε instead of Equation AM1–10.

$$\varepsilon = Cos^{-1}\left[\frac{R_p^2 + R_\delta^2 - R''^2_s}{2\ R_p\ R_\delta}\right] \qquad \text{(AM1-12)}$$

Where:

$R''_s=(R'^2_s+R_p^2Sin^2\beta_p)^{1/2}$.

If the angle ε is such that ε≤ 30° or ε ≥ 150°, the azimuth angle correction shall not be performed and the associated opacity value shall be discarded.

2.6.2 Elevation Angle Correction. An individual lidar-measured opacity, O_p, shall be corrected for elevation angle if the laser elevation or inclination angle, β_p [Figure AM1–V], is greater than or equal to the value calculated in Equation AM1–13.

$$\beta_p \geq Cos^{-1}\left[\frac{ln\ (101 - O_p)}{ln\ (100 - O_p)}\right] \qquad \text{(AM1-13)}$$

The measured opacity, O_p, along the lidar path L, is adjusted to obtain the corrected opacity, O_{pc}, for the actual plume (horizontal) path, P, by using Equation (AM1–14).

*Obtained directly from lidar. These values should be recorded.

$$O_{pc} = (100\%)\left[1-\left(1-0.01\,O_p\right)^{Cos\beta}p\right], \qquad (AM1\text{-}14)$$

Where:

β_p=lidar elevation or inclination angle,

O_p=measured opacity along path L, and

O_{pc}=corrected opacity for the actual plume thickness P.

The values for β_p, O_p and O_{pc} should be recorded.

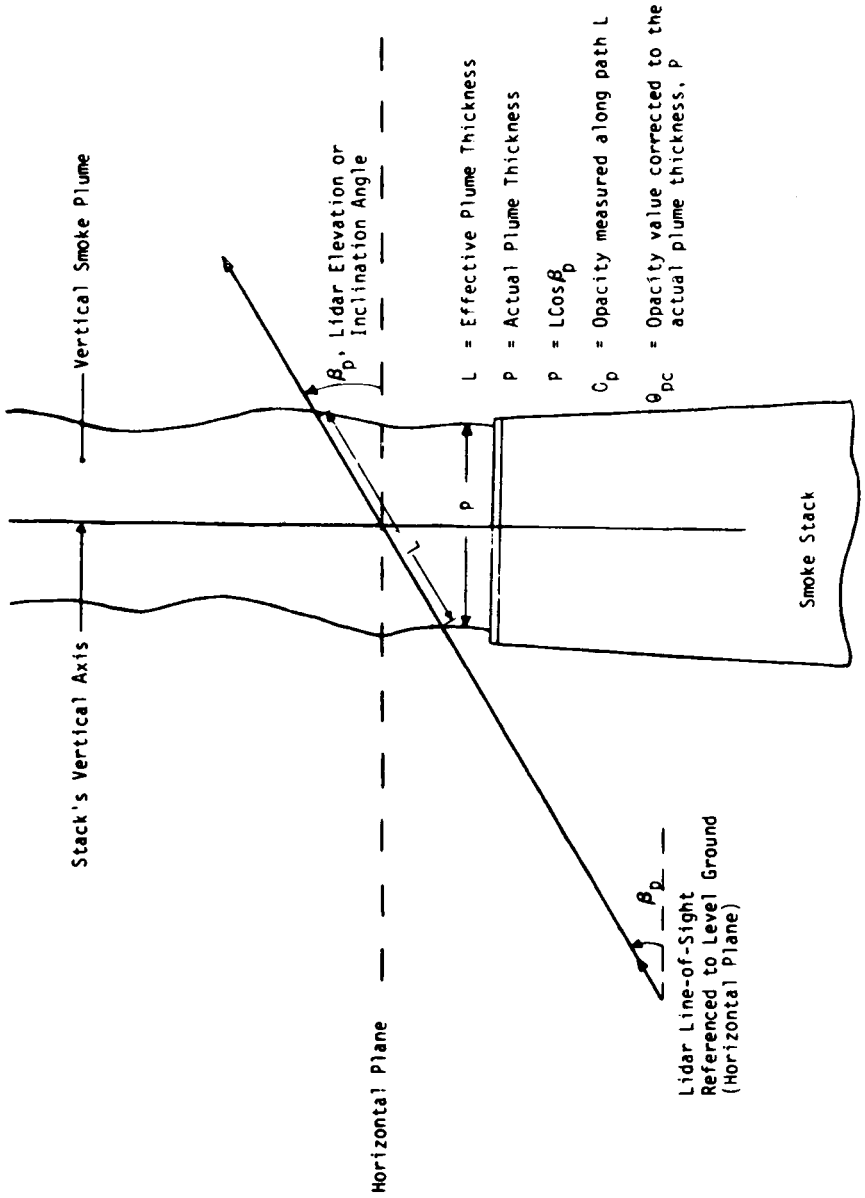

Figure AM1-V. Elevation Angle Correction for Vertical Plumes.

2.6.3 Determination of Actual Plume Opacity. Actual opacity of the plume shall be determined by Equation AM1–15.

$$O_{pa} = O_{pc} - [2\ S_o + 5\%]. \quad \text{(AM1-15)}$$

2.6.4 Calculation of Average Actual Plume Opacity. The average of the actual plume opacity, O_{pa}, shall be calculated as the average of the consecutive individual actual opacity values, O_{pa}, by Equation AM1–16.

$$\bar{O}_{pa} = \frac{1}{n} \sum_{k=1}^{n} (O_{pa})_k \ , \qquad \text{(AM1-16)}$$

Where:

$(O_{pa})_k$=the kth actual opacity value in an averaging interval containing n opacity values; k is a summing index.

Σ=the sum of the individual actual opacity values.

n=the number of individual actual opacity values contained in the averaging interval.

O_{pa}=average actual opacity calculated over the averaging interval.

3. *Lidar Performance Verification*

The lidar shall be subjected to two types of performance verifications that shall be performed in the field. The annual calibration, conducted at least once a year, shall be used to directly verify operation and performance of the entire lidar system. The routine verification, conducted for each emission source measured, shall be used to insure proper performance of the optical receiver and associated electronics.

3.1 Annual Calibration Procedures. Either a plume from a smoke generator or screen targets shall be used to conduct this calibration.

If the screen target method is selected, five screens shall be fabricated by placing an opaque mesh material over a narrow frame (wood, metal extrusion, etc.). The screen shall have a surface area of at least one square meter. The screen material should be chosen for precise optical opacities of about 10, 20, 40, 60, and 80%. Opacity of each target shall be optically determined and should be recorded. If a smoke generator plume is selected, it shall meet the requirements of Section 3.3 of Reference Method 9. This calibration shall be performed in the field during calm (as practical) atmospheric conditions. The lidar shall be positioned in accordance with Section 2.1.

The screen targets must be placed perpendicular to and coincident with the lidar line-of-sight at sufficient height above the ground (suggest about 30 ft) to avoid ground-level dust contamination. Reference signals shall be obtained just prior to conducting the calibration test.

The lidar shall be aimed through the center of the plume within 1 stack diameter of the exit, or through the geometric center of the screen target selected. The lidar shall be set in operation for a 6-minute data run at a nominal pulse rate of 1 pulse every 10 seconds. Each backscatter return signal and each respective opacity value obtained from the smoke generator transmissometer, shall be obtained in temporal coincidence. The data shall be analyzed and reduced in accordance with Section 2.6 of this method. This calibration shall be performed for 0% (clean air), and at least five other opacities (nominally 10, 20, 40, 60, and 80%).

The average of the lidar opacity values obtained during a 6-minute calibration run shall be calculated and should be recorded. Also the average of the opacity values obtained from the smoke generator transmissometer for the same 6-minute run shall be calculated and should be recorded.

Alternate calibration procedures that do not meet the above requirements but produce equivalent results may be used.

3.2 Routine Verification Procedures. Either one of two techniques shall be used to conduct this verification. It shall be performed at least once every 4 hours for each emission source measured. The following parameters shall be directly verified.

1) The opacity value of 0% plus a minimum of 5 (nominally 10, 20, 40, 60, and 80%) opacity values shall be verified through the PMT detector and data processing electronics.

2) The zero-signal level (receiver signal with no optical signal from the source present) shall be inspected to insure that no spurious noise is present in the signal. With the entire lidar receiver and analog/digital electronics turned on and adjusted for normal operating performance, the following procedures shall be used for Techniques 1 and 2, respectively.

3.2.1 Procedure for Technique 1. This test shall be performed with no ambient or stray light reaching the PMT detector. The narrow band filter (694.3 nanometers peak) shall be removed from its position in front of the PMT detector. Neutral density filters of nominal opacities of 10, 20, 40, 60, and 80% shall be used. The recommended test configuration is depicted in Figure AM1–VI.

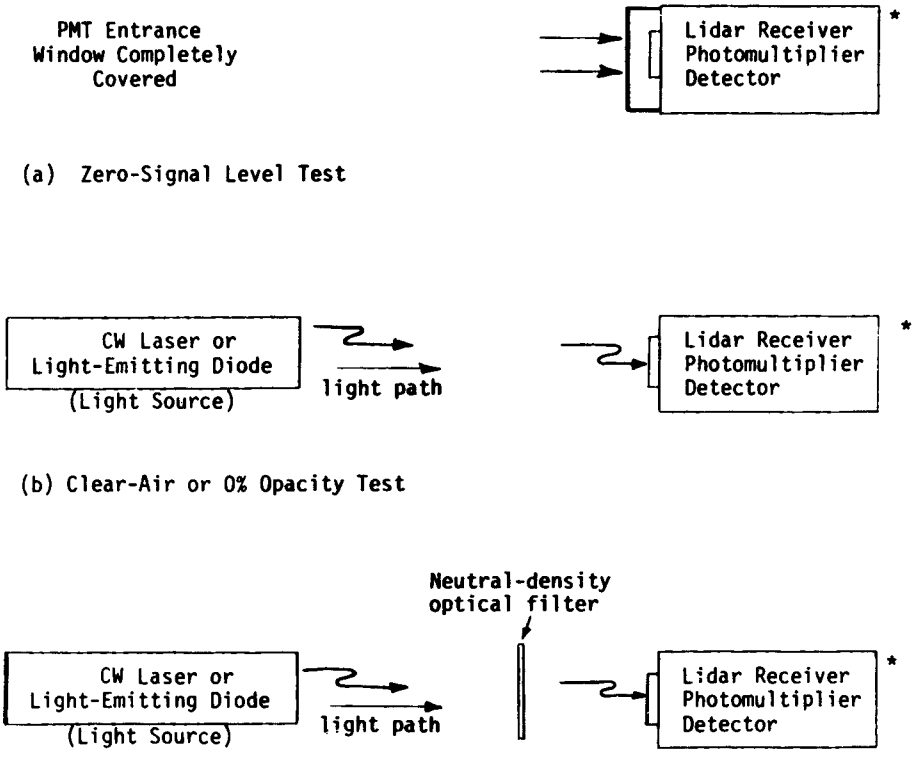

Figure AM1-VI. Test Configuration for Technique 1.

The zero-signal level shall be measured and should be recorded, as indicated in Figure AM1–VI(a). This simulated clear-air or 0% opacity value shall be tested in using the selected light source depicted in Figure AM1–VI(b).

The light source either shall be a continuous wave (CW) laser with the beam mechanically chopped or a light emitting diode controlled with a pulse generator (rectangular pulse). (A laser beam may have to be attenuated so as not to saturate the PMT detector). This signal level shall be measured

and should be recorded. The opacity value is calculated by taking two pick intervals [Section 2.6] about 1 microsecond apart in time and using Equation (AM1–2) setting the ratio $R_n/R_f=1$. This calculated value should be recorded.

The simulated clear-air signal level is also employed in the optical test using the neutral density filters. Using the test configuration in Figure AM1–VI(c), each neutral density filter shall be separately placed into the light path from the light source to the PMT detector. The signal level shall be measured and should be recorded. The opacity value for each filter is calculated by taking the signal level for that respective filter (I_f), dividing it by the 0% opacity signal level (I_n) and performing the remainder of the calculation by Equation (AM1–2) with $R_n/R_f=1$. The calculated opacity value for each filter should be recorded.

The neutral density filters used for Technique 1 shall be calibrated for actual opacity with accuracy of ±2% or better. This calibration shall be done monthly while the filters are in use and the calibrated values should be recorded.

3.2.2 Procedure for Technique 2. An optical generator (built-in calibration mechanism) that contains a light-emitting diode (red light for a lidar containing a ruby laser) is used. By injecting an optical signal into the lidar receiver immediately ahead of the PMT detector, a backscatter signal is simulated. With the entire lidar receiver electronics turned on and adjusted for normal operating performance, the optical generator is turned on and the simulation signal (corrected for $1/R^2$) is selected with no plume spike signal and with the opacity value equal to 0%. This simulated clear-air atmospheric return signal is displayed on the system's video display. The lidar operator then makes any fine adjustments that may be necessary to maintain the system's normal operating range.

The opacity values of 0% and the other five values are selected one at a time in any order. The simulated return signal data should be recorded. The opacity value shall be calculated. This measurement/calculation shall be performed at least three times for each selected opacity value. While the order is not important, each of the opacity values from the optical generator shall be verified. The calibrated optical generator opacity value for each selection should be recorded.

The optical generator used for Technique 2 shall be calibrated for actual opacity with an accuracy of ±1% or better. This calibration shall be done monthly while the generator is in use and calibrated value should be recorded.

Alternate verification procedures that do not meet the above requirements but produce equivalent results may be used.

3.3 Deviation. The permissible error for the annual calibration and routine verification are:

3.3.1 Annual Calibration Deviation.

3.3.1.1 Smoke Generator. If the lidar-measured average opacity for each data run is not within ±5% (full scale) of the respective smoke generator's average opacity over the range of 0% through 80%, then the lidar shall be considered out of calibration.

3.3.1.2 Screens. If the lidar-measured average opacity for each data run is not within ±3% (full scale) of the laboratory-determined opacity for each respective simulation screen target over the range of 0% through 80%, then the lidar shall be considered out of calibration.

3.3.2 Routine Verification Error. If the lidar-measured average opacity for each neutral density filter (Technique 1) or optical generator selection (Technique 2) is not within ±3% (full scale) of the respective laboratory calibration value then the lidar shall be considered non-operational.

4. *Performance/Design Specification for Basic Lidar System*

4.1 Lidar Design Specification. The essential components of the basic lidar system are a pulsed laser (transmitter), optical receiver, detector, signal processor, recorder, and an aiming device that is used in aiming the lidar transmitter and receiver. Figure AM1–VII shows a functional block diagram of a basic lidar system.

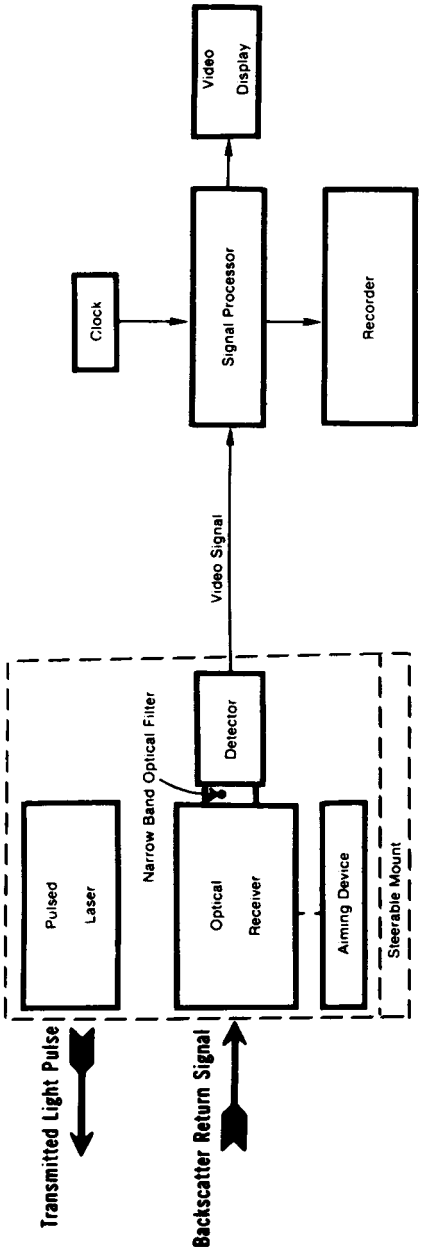

Figure AM1-VII. Functional Block Diagram of a Basic Lidar System

4.2 Performance Evaluation Tests. The owner of a lidar system shall subject such a lidar system to the performance verification tests described in Section 3, prior to first use of this method. The annual calibration shall be performed for three separate, complete

runs and the results of each should be recorded. The requirements of Section 3.3.1 must be fulfilled for each of the three runs.

Once the conditions of the annual calibration are fulfilled the lidar shall be subjected to the routine verification for three separate complete runs. The requirements of Section 3.3.2 must be fulfilled for each of the three runs and the results should be recorded. The Administrator may request that the results of the performance evaluation be submitted for review.

5. *References*

5.1 The Use of Lidar for Emissions Source Opacity Determination, U.S. Environmental Protection Agency, National Enforcement Investigations Center, Denver, CO. EPA–330/1–79–003–R, Arthur W. Dybdahl, current edition [NTIS No. PB81–246662].

5.2 Field Evaluation of Mobile Lidar for the Measurement of Smoke Plume Opacity, U.S. Environmental Protection Agency, National Enforcement Investigations Center, Denver, CO. EPA/NEIC–TS–128, February 1976.

5.3 Remote Measurement of Smoke Plume Transmittance Using Lidar, C. S. Cook, G. W. Bethke, W. D. Conner (EPA/RTP). Applied Optics 11, pg 1742. August 1972.

5.4 Lidar Studies of Stack Plumes in Rural and Urban Environments, EPA–650/4–73–002, October 1973.

5.5 American National Standard for the Safe Use of Lasers ANSI Z 136.1–176, March 8, 1976.

5.6 U.S. Army Technical Manual TB MED 279, Control of Hazards to Health from Laser Radiation, February 1969.

5.7 Laser Institute of America Laser Safety Manual, 4th Edition.

5.8 U.S. Department of Health, Education and Welfare, Regulations for the Administration and Enforcement of the Radiation Control for Health and Safety Act of 1968, January 1976.

5.9 Laser Safety Handbook, Alex Mallow, Leon Chabot, Van Nostrand Reinhold Co., 1978.

METHOD 10—DETERMINATION OF CARBON MONOXIDE EMISSIONS FROM STATIONARY SOURCES

1. *Principle and Applicability*

1.1 Principle. An integrated or continuous gas sample is extracted from a sampling point and analyzed for carbon monoxide (CO) content using a Luft-type nondispersive infrared analyzer (NDIR) or equivalent.

1.2 Applicability. This method is applicable for the determination of carbon monoxide emissions from stationary sources only when specified by the test procedures for determining compliance with new source performance standards. The test procedure will indicate whether a continuous or an integrated sample is to be used.

2. *Range and Sensitivity*

2.1 Range. 0 to 1,000 ppm.

2.2 Sensitivity. Minimum detectable concentration is 20 ppm for a 0 to 1,000 ppm span.

3. *Interferences*

Any substance having a strong absorption of infrared energy will interfere to some extent. For example, discrimination ratios for water (H_2O) and carbon dioxide (CO_2) are 3.5 percent H_2O per 7 ppm CO and 10 percent CO_2 per 10 ppm CO, respectively, for devices measuring in the 1,500 to 3,000 ppm range. For devices measuring in the 0 to 100 ppm range, interference ratios can be as high as 3.5 percent H_2O per 25 ppm CO and 10 percent CO_2 per 50 ppm CO. The use of silica gel and ascarite traps will alleviate the major interference problems. The measured gas volume must be corrected if these traps are used.

4. *Precision and Accuracy*

4.1 Precision. The precision of most NDIR analyzers is approximately ±2 percent of span.

4.2 Accuracy. The accuracy of most NDIR analyzers is approximately ±5 percent of span after calibration.

5. *Apparatus*

5.1 Continuous Sample (Figure 10–1).

5.1.1 Probe. Stainless steel or sheathed Pyrex[1] glass, equipped with a filter to remove particulate matter.

5.1.2 Air-Cooled Condenser or Equivalent. To remove any excess moisture.

5.2 Integrated Sample (Figure 10–2).

5.2.1 Probe. Stainless steel or sheathed Pyrex glass, equipped with a filter to remove particulate matter.

5.2.2 Air-Cooled Condenser or Equivalent. To remove any excess moisture.

5.2.3 Valve. Needle valve, or equivalent, to adjust flow rate.

5.2.4 Pump. Leak-free diaphragm type, or equivalent, to transport gas.

5.2.5 Rate Meter. Rotameter, or equivalent, to measure a flow range from 0 to 1.0 liter per min (0.035 cfm).

5.2.6 Flexible Bag. Tedlar, or equivalent, with a capacity of 60 to 90 liters (2 to 3 ft^3). Leak-test the bag in the laboratory before using by evacuating bag with a pump followed by a dry gas meter. When evacuation is complete, there should be no flow through the meter.

5.2.7 Pitot Tube. Type S, or equivalent, attached to the probe so that the sampling rate can be regulated proportional to the stack gas velocity when velocity is varying with the time or a sample traverse is conducted.

5.3 Analysis (Figure 10–3).

[1] Mention of trade names or specific products does not constitute endorsement by the Environmental Protection Agency.

5.3.1 Carbon Monoxide Analyzer. Nondispersive infrared spectrometer, or equivalent. This instrument should be demonstrated, preferably by the manufacturer, to meet or exceed manufacturer's specifications and those described in this method.

5.3.2 Drying Tube. To contain approximately 200 g of silica gel.

5.3.3 Calibration Gas. Refer to section 6.1.

5.3.4 Filter. As recommended by NDIR manufacturer.

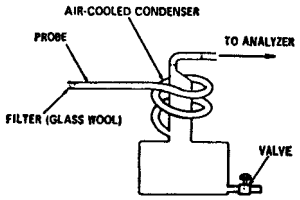

Figure 10-1. Continuous sampling train.

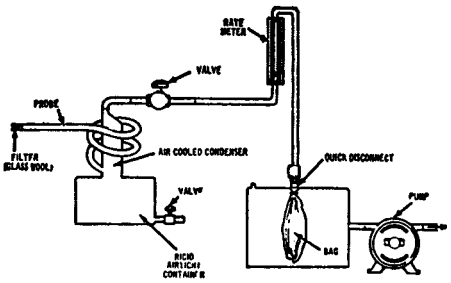

Figure 10-2. Integrated gas-sampling train.

5.3.5 CO_2 Removal Tube. To contain approximately 500 g of ascarite.

5.3.6 Ice Water Bath. For ascarite and silica gel tubes.

5.3.7 Valve. Needle valve, or equivalent, to adjust flow rate

5.3.8 Rate Meter. Rotameter or equivalent to measure gas flow rate of 0 to 1.0 liter per min (0.035 cfm) through NDIR.

5.3.9 Recorder (*optional*). To provide permanent record of NDIR readings.

6. *Reagents*

6.1 Calibration Gases. Known concentration of CO in nitrogen (N_2) for instrument span, prepurified grade of N_2 for zero, and two additional concentrations corresponding approximately to 60 percent and 30 percent span. The span concentration shall not exceed 1.5 times the applicable source performance standard. The calibration gases shall be certified by the manufacturer to be within ±2 percent of the specified concentration.

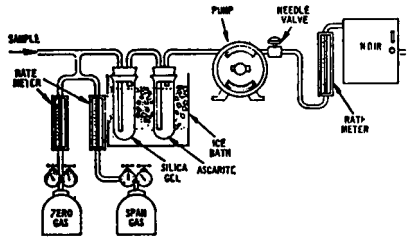

Figure 10-3. Analytical equipment.

6.2 Silica Gel. Indicating type, 6 to 16 mesh, dried at 175 °C (347 °F) for 2 hours.

6.3 Ascarite. Commercially available.

7. *Procedure*

7.1 Sampling.

7.1.1 Continuous Sampling. Set up the equipment as shown in Figure 10–1 making sure all connections are leak free. Place the probe in the stack at a sampling point and purge the sampling line. Connect the analyzer and begin drawing sample into the analyzer. Allow 5 minutes for the system to stabilize, then record the analyzer reading as required by the test procedure. (See section 7.2 and 8). CO_2 content of the gas may be determined by using the Method 3 integrated sample procedure, or by weighing the ascarite CO_2 removal tube and computing CO_2 concentration from the gas volume sampled and the weight gain of the tube.

7.1.2 Integrated Sampling. Evacuate the flexible bag. Set up the equipment as shown in Figure 10–2 with the bag disconnected. Place the probe in the stack and purge the sampling line. Connect the bag, making sure that all connections are leak free. Sample at a rate proportional to the stack velocity. CO_2 content of the gas may be determined by using the Method 3 integrated sample procedures, or by weighing the ascarite CO_2 removal tube and computing CO_2 concentration from the gas volume sampled and the weight gain of the tube.

7.2 CO Analysis. Assemble the apparatus as shown in Figure 10–3, calibrate the instrument, and perform other required operations as described in section 8. Purge analyzer with N_2 prior to introduction of each sample. Direct the sample stream through the instrument for the test period, recording the readings. Check the zero and span again after the test to assure that any drift or malfunction is detected. Record the sample data on Table 10–1.

8. *Calibration*

Assemble the apparatus according to Figure 10–3. Generally an instrument requires a warm-up period before stability is obtained. Follow the manufacturer's instructions for specific procedure. Allow a minimum time of 1 hour for warm-up. During this time check

the sample conditioning apparatus, i.e., filter, condenser, drying tube, and CO_2 removal tube, to ensure that each component is in good operating condition. Zero and calibrate the instrument according to the manufacturer's procedures using, respectively, nitrogen and the calibration gases.

TABLE 10–1—FIELD DATA

	Comments
Location	
Test	
Date	
Operator	

Clock time	Rotameter setting, liters per minute (cubic feet per minute)

9. *Calculation*

Calculate the concentration of carbon monoxide in the stack using Equation 10–1.

$$C_{CO\ stack}=C_{CO\ NDIR}(1-F_{co2})$$

Eq. 10–1

Where:

$C_{CO\ stack}$=Concentration of CO in stack, ppm by volume (dry basis).

$C_{CO\ NDIR}$=Concentration of CO measured by NDIR analyzer, ppm by volume (dry basis).

F_{CO2}=Volume fraction of CO_2 in sample, i.e., percent CO_2 from Orsat analysis divided by 100.

10. Alternative Procedures

10.1 Interference Trap. The sample conditioning system described in Method 10A, sections 2.1.2 and 4.2, may be used as an alternative to the silica gel and ascarite traps.

11. *Bibliography*

1. McElroy, Frank, The Intertech NDIR–CO Analyzer, Presented at 11th Methods Conference on Air Pollution, University of California, Berkeley, CA. April 1, 1970.
2. Jacobs, M. B., et al., Continuous Determination of Carbon Monoxide and Hydrocarbons in Air by a Modified Infrared Analyzer, J. Air Pollution Control Association, 9(2): 110–114. August 1959.
3. MSA LIRA Infrared Gas and Liquid Analyzer Instruction Book, Mine Safety Appliances Co., Technical Products Division, Pittsburgh, PA.
4. Models 215A, 315A, and 415A Infrared Analyzers, Beckman Instruments, Inc., Beckman Instructions 1635–B, Fullerton, CA. October 1967.
5. Continuous CO Monitoring System, Model A5611, Intertech Corp., Princeton, NJ.
6. UNOR Infrared Gas Analyzers, Bendix Corp., Ronceverte, WV

ADDENDA

A. PERFORMANCE SPECIFICATIONS FOR NDIR CARBON MONOXIDE ANALYZERS

Range (minimum)	0–1000 ppm.
Output (minimum)	0–10mV.
Minimum detectable sensitivity.	20 ppm.
Rise time, 90 percent (maximum).	30 seconds.
Fall time, 90 percent (maximum).	30 seconds.
Zero drift (maximum)	10% in 8 hours.
Span drift (maximum)	10% in 8 hours.
Precision (minimum)	±2% of full scale.
Noise (maximum)	±1% of full scale.
Linearity (maximum deviation)	2% of full scale.
Interference rejection ratio	CO_2—1000 to 1, H_2O—500 to 1.

B. *Definitions of Performance Specifications.*

Range— The minimum and maximum measurement limits.

Output— Electrical signal which is proportional to the measurement; intended for connection to readout or data processing devices. Usually expressed as millivolts or milliamps full scale at a given impedance.

Full scale— The maximum measuring limit for a given range.

Minimum detectable sensitivity— The smallest amount of input concentration that can be detected as the concentration approaches zero.

Accuracy— The degree of agreement between a measured value and the true value; usually expressed as ± percent of full scale.

Time to 90 percent response— The time interval from a step change in the input concentration at the instrument inlet to a reading of 90 percent of the ultimate recorded concentration.

Rise Time (*90 percent*)—The interval between initial response time and time to 90 percent response after a step increase in the inlet concentration.

Fall Time (*90 percent*)—The interval between initial response time and time to 90 percent response after a step decrease in the inlet concentration.

Zero Drift— The change in instrument output over a stated time period, usually 24 hours, of unadjusted continuous operation when the input concentration is zero; usually expressed as percent full scale.

Span Drift— The change in instrument output over a stated time period, usually 24 hours, of unadjusted continuous operation when the input concentration is a stated upscale value; usually expressed as percent full scale.

Precision— The degree of agreement between repeated measurements of the same concentration, expressed as the average deviation of the single results from the mean.

Noise—Spontaneous deviations from a mean output not caused by input concentration changes.

Linearity—The maximum deviation between an actual instrument reading and the reading predicted by a straight line drawn between upper and lower calibration points.

METHOD 10A—DETERMINATION OF CARBON MONOXIDE EMISSIONS IN CERTIFYING CONTINUOUS EMISSION MONITORING SYSTEMS AT PETROLEUM REFINERIES

1. Applicability and Principle

1.1 Applicability. This method applies to the measurement of carbon monoxide (CO) at petroleum refineries. This method serves as the reference method in the relative accuracy test for nondispersive infrared (NDIR) CO continuous emission monitoring systems (CEMS's) that are required to be installed in petroleum refineries on fluid catalytic cracking unit catalyst regenerators [40 CFR Part 60.105(a)(2)].

1.2 Principle. An integrated gas sample is extracted from the stack, passed through an alkaline permanganate solution to remove sulfur and nitrogen oxides, and collected in a Tedlar bag. The CO concentration in the sample is measured spectrophotometrically using the reaction of CO with p-sulfaminobenzoic acid.

1.3 Range and Sensitivity.

1.3.1 Range. Approximately 3 to 1800 ppm CO. Samples having concentrations below 400 ppm are analyzed at 425 nm, and samples having concentrations above 400 ppm are analyzed at 600 nm.

1.3.2 Sensitivity. The detection limit is 3 ppm based on three times the standard deviation of the mean reagent blank values.

1.4 Interferences. Sulfur oxides, nitric oxide, and other acid gases interfere with the colorimetric reaction. They are removed by passing the sampled gas through an alkaline potassium permanganate scrubbing solution. Carbon dioxide (CO_2) does not interfere, but, because it is removed by the scrubbing solution, its concentration must be measured independently and an appropriate volume correction made to the sampled gas.

1.5 Precision, Accuracy, and Stability.

1.5.1 Precision. The estimated intralaboratory standard deviation of the method is 3 percent of the mean for gas samples analyzed in duplicate in the concentration range of 39 to 412 ppm. The interlaboratory precision has not been established.

1.5.2 Accuracy. The method contains no significant biases when compared to an NDIR analyzer calibrated with National Bureau of Standards (NBS) standards.

1.5.3 Stability. The individual components of the colorimetric reagent are stable for at least 1 month. The colorimetric reagent must be used within 2 days after preparation to avoid excessive blank correction. The samples in the Tedlar[1] bag should be stable for at least 1 week if the bags are leak-free.

2. Apparatus

2.1 Sampling. The sampling train is shown in Figure 10A–1, and component parts are discussed below:

[1] Mention of trade names or commercial products in this publication does not constitute the endorsement or recommendation for use by the Environmental Protection Agency.

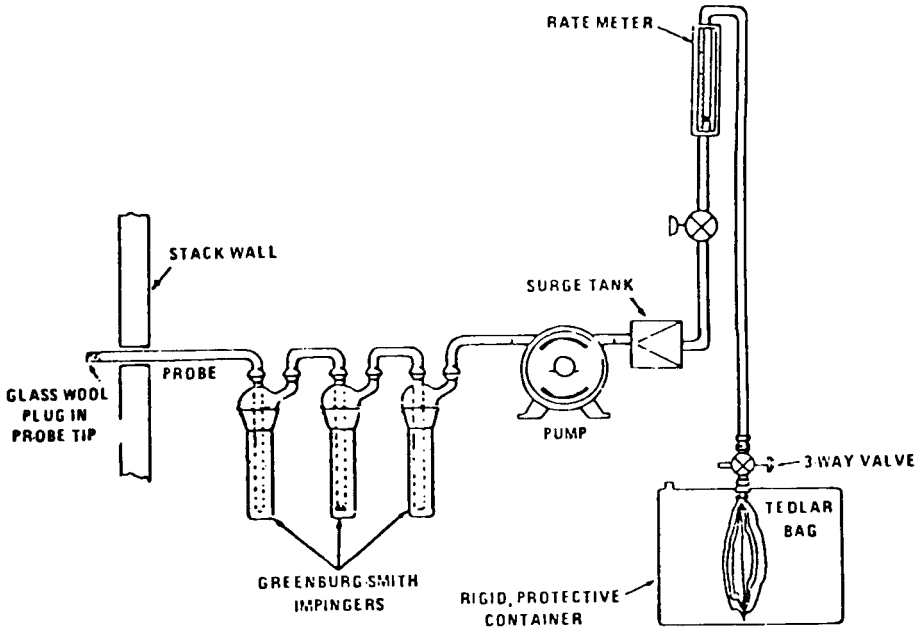

Figure 10A-1. Sampling train.

2.1.1 Probe. Stainless steel, sheathed Pyrex glass, or equivalent, equipped with a glass wool plug to remove particulate matter.

2.1.2 Sample Conditioning System. Three Greenburg-Smith impingers connected in series with leak-free connections.

2.1.3 Pump. Leak-free pump with stainless steel and Teflon parts to transport sample at a flow rate of 300 ml/min to the flexible bag.

2.1.4 Surge Tank. Installed between the pump and the rate meter to eliminate the pulsation effect of the pump on the rate meter.

2.1.5 Rate Meter. Rotameter, or equivalent, to measure flow rate at 300 ml/min. Calibrate according to Section 5.2.

2.1.6 Flexible Bag. Tedlar, or equivalent, with a capacity of 10 liters and equipped with a sealing quick-connect plug. The bag must be leak-free according to Section 4.1. For protection, it is recommened that the bag be enclosed with a rigid container.

2.1.7 Valves. Stainless-steel needle valve to adjust flow rate, and stainless-steel three-way valve, or equivalent.

2.1.8 CO_2 Analyzer. Method 3 or its approved alternative to measure CO_2 concentration to within 0.5 percent.

2.1.9 Volume Meter. Dry gas meter, calibrated and capable of measuring the sample volume under rotameter calibration conditions of 300 ml/min for 10 minutes.

2.1.10 Pressure Gauge. A water filled U-tube manometer, or equivalent, of about 28 cm (12 in.) to leak-check the flexible bag.

2.2 Analysis.

2.2.1 Spectrophotometer. Single- or double-beam to measure absorbance at 425 and 600 nm. Slit width should not exceed 20 nm.

2.2.2 Spectrophotometer Cells. 1-cm pathlength.

2.2.3 Vacuum Gauge. U-tube mercury manometer, 1 meter (39 in.), with 1-mm divisions, or other gauge capable of measuring pressure to within 1 mm Hg.

2.2.4 Pump. Capable of evacuating the gas reaction bulb to a pressure equal to or less than 40 mm Hg absolute, equipped with coarse and fine flow control valves.

2.2.5 Barometer. Mercury, aneroid, or other barometer capable of measuring atmospheric pressure to within 1 mm Hg.

2.2.6 Reaction Bulbs. Pyrex glass, 100.ml with Teflon stopcock (Figure 10A-2), leak-free at 40 mm Hg, designed so that 10 ml of the colorimetric reagent can be added and removed easily and accurately. Commercially available gas sample bulbs such as Supelco Catalog No. 2-2161 may also be used.

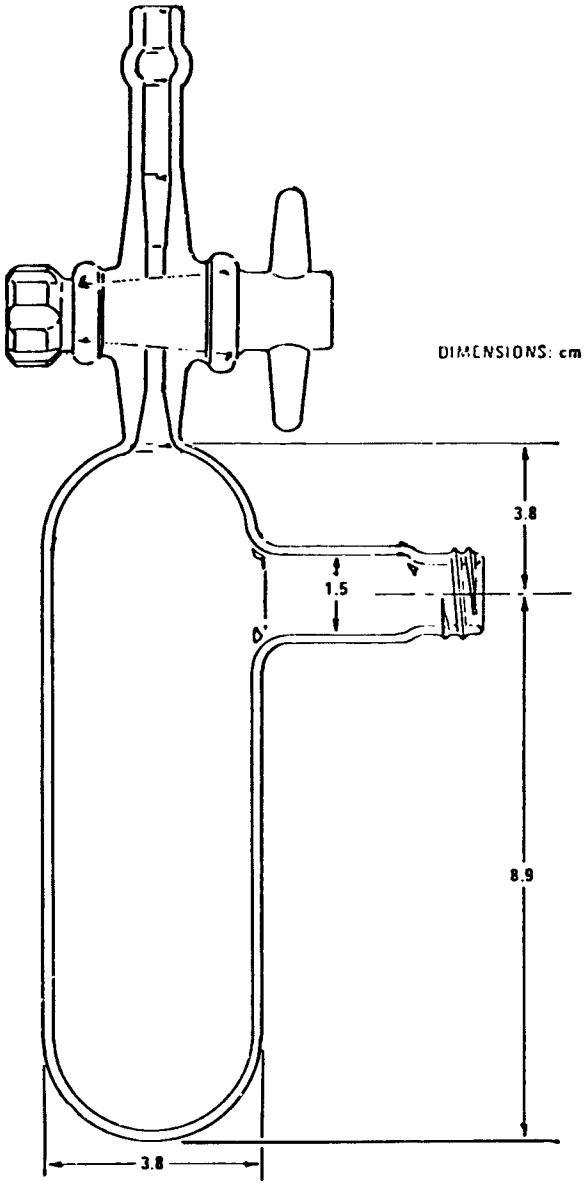

Figure 10A-2. Sample reaction bulbs.

2.2.7 Manifold. Stainless steel, with connections for three reaction bulbs and the appropriate connections for the manometer and sampling bag as shown in Figure 10A-3.

2.2.8 Pipets. Class A, 10-ml size.

2.2.9 Shaker Table. Reciprocating-stroke type such as Eberbach Corporation, Model 6015. A rocking arm or rotary-motion type

shaker may also be used. The shaker must be large enough to accommodate at least six gas sample bulbs simultaneously. It may be necessary to construct a table top extension for most commercial shakers to provide sufficient space for the needed bulbs (Figure 10A–4).

2.2.10 Valve. Stainless steel shut-off valve.

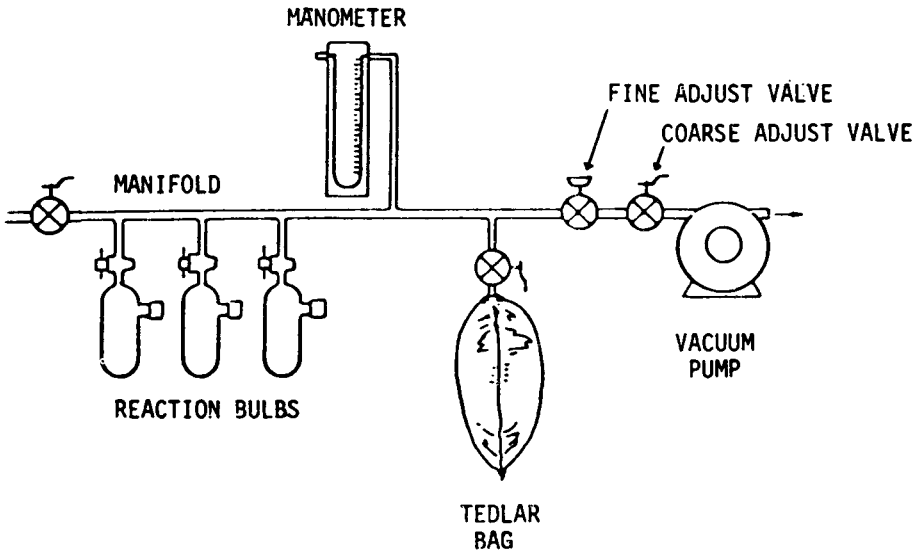

Figure 10A-3. Sample bulb filling system.

2.2.11 Analytical Balance. Capable of accurately weighing to 0.1 mg.

3. Reagents

Unless otherwise indicated, all reagents shall conform to the specifications established by the Committee on Analytical Reagents of the American Chemical Society, where such specifications are available, otherwise, the best available grade shall be used.

3.1 Sampling.

3.1.1 Water. Deionized distilled, as described in Method 6, Section 3.1.1.

3.1.2 Alkaline Permanganate Solution, 0.25 M $KMn0_4$/1.5 M NaOH. Dissolve 40 g $KMn0_4$ and 60 g NaOH in water, and dilute to 1 liter.

3.2 Analysis.

3.2.1 Water. Same as in Section 3.1.1.

3.2.2 1 M Sodium Hydroxide (NaOH) Solution. Dissolve 40 g NaOH in approximately 900 ml of water, cool, and dilute to 1 liter.

3.2.3 0.1 M Silver Nitrate ($AgNO_3$) Solution. Dissolve 8.5 g $AgNO_3$ in water, and dilute to 500 ml.

3.2.4 0.1 M Para-Sulfaminobenzoic Acid (p-SABA) Solution. Dissolve 10.0 g p-SABA in 0.1 M NaOH (prepared by diluting 50 ml of 1 M NaOH to 500 ml), and dilute to 500 ml with 0.1 M NaOH.

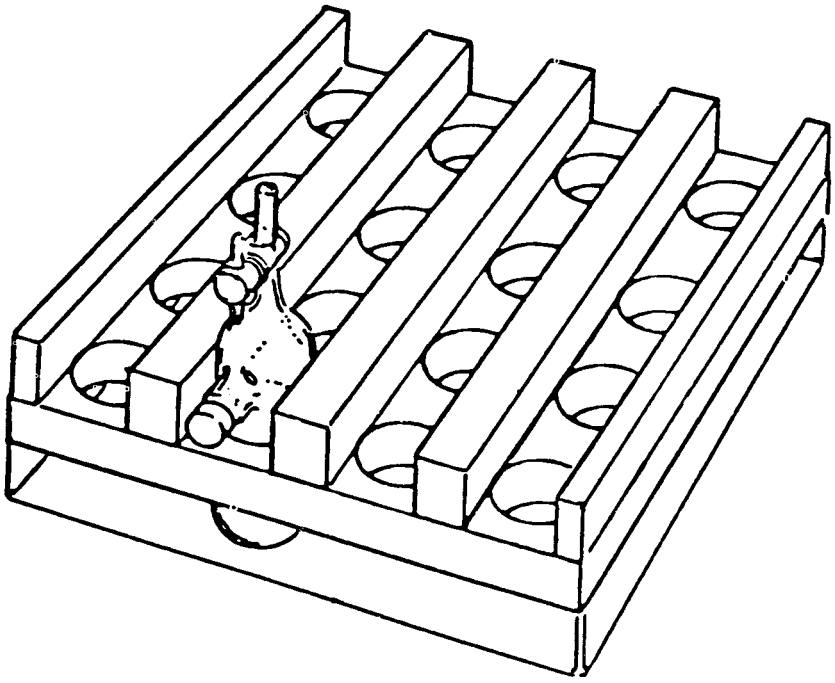

Figure 10A-4. Shaker table adapter.

3.2.5 Colorimetric Solution. To a flask, add 100 ml of p-SABA solution and 100 ml of $AgNO_3$ solution. Mix, and add 50 ml of 1 M NaOH with shaking. The resultant solution should be clear and colorless. This solution is acceptable for use for a period of 2 days.

3.2.6 Standard Gas Mixtures. Traceable to NBS standards and containing between 50 and 1000 ppm CO in nitrogen. At least two concentrations are needed to span each calibration range used (Section 5.3).

The calibration gases shall be certified by the manufacturer to be within 2 percent of the specified concentrations.

4. Procedure

4.1 Sample Bag Leak-checks. While a bag leak-check is required after bag use, it should also be done before the bag is used for sample collection. The bag should be leak-checked in the inflated and deflated condition according to the following procedures.

Connect the bag to a water manometer, and pressurize the bag to 5 to 10 cm H_20 (2 to 4 in. H_20). Allow the bag to stand for 60 minutes. Any displacement in the water manometer indicates a leak. Now, evacuate the bag with a leakless pump that is connected on the downstream side of a flow-indicating device such as a 0-to 100-ml/min rotameter or an impinger containing water. When the bag is completely evacuated, no flow should be evident if the bag is leak-free.

4.2 Sampling. Evacuate the Tedlar bag completely using a vacuum pump. Assemble the apparatus as shown in Figure 10A-1. Loosely pack glass wool in the tip of the probe. Place 400 ml of alkaline permanganate

solution in the first two impingers and 250 ml in the third. Connect the pump to the third impinger, and follow this with the surge tank, rate meter, and three-way valve. Do not connect the Tedlar bag to the system at this time.

Leak-check the sampling system by placing a vacuum gauge at or near the probe inlet, plugging the probe inlet, opening the three-way valve, and pulling a vacuum of approximately 250 mm Hg on the system while observing the rate meter for flow. If flow is indicated on the rate meter, do not proceed further until the leak is found and corrected.

Purge the system with sample gas by inserting the probe into the stack and drawing sample through the system at 300 ml/min ±10 percent for 5 minutes. Connect the evacuated Tedlar bag to the system, record the starting time, and sample at a rate of 300 ml/min for 30 minutes, or until the Tedlar bag is nearly full. Record the sampling time, the barometric pressure, and the ambient temperature. Purge the system as described above immediately before each sample.

The scrubbing solution is adequate for removing sulfur and nitrogen oxides from 50 liters of stack gas when the concentration of each is less than 1,000 ppm and the CO_2 concentration is less than 15 percent. Replace the scrubber solution after every fifth sample.

4.3 Carbon Dioxide Measurement. Measure the CO_2 content in the stack to the nearest 0.5 percent each time a CO sample is collected. A simultaneous grab sample analyzed by the Fyrite analyzer is acceptable.

4.4 Analysis. Assemble the system shown in Figure 10A–3, and record the information required in Table 10A-1 as it is obtained. Pipet 10.0 ml of the colorimetric reagent into each gas reaction bulb, and attach the bulbs to the system. Open the stopcocks to the reaction bulbs, but leave the valve to the Tedlar bag closed. Turn on the pump, fully open the coarse-adjust flow valve, and slowly open the fine-adjust valve until the pressure is reduced to at least 40 mm Hg. Now close the coarse adjust valve, and observe the manometer to be certain that the system is leak-free. Wait a minimum of 2 minutes. If the pressure has increased less than 1 mm, proceed as described below. If a leak is present, find and correct it before proceeding further.

TABLE 10A-1. DATA RECORDING SHEET FOR SAMPLES ANALYZED IN TRIPLICATE

Sample no./ Type	Room temp., °C	Stack % CO_2	Bulb no.	Bulb vol., liters	Reagent vol. in bulb, liter	Partial pressure of gas in bulb mm Hg	P_{bar}, mm Hg	Shaking time, min	Abs versus water	A -A_r	A_s	Avg. A_s
Blank												
Std. 1												
Std. 2												
Sample 1												
Sample 2												
Sample 3												

Record the vacuum pressure (P_v) to the nearest 1 mm Hg, and close the reaction bulb stopcocks. Open the Tedlar bag valve, and allow the system to come to atmospheric pressure. Close the bag valve, open the pump coarse adjust valve, and evacuate the system again. Repeat this fill/evacuation procedure at least twice to flush the manifold completely. Close the pump coarse adjust valve, open the Tedlar bag valve, and let the system fill to atmospheric pressure. Open the stopcocks to the reaction bulbs, and let the entire system come to atmospheric pressure. Close the bulb stopcocks, remove the bulbs, record the room temperature and barametric pressure (P_{bar}, to nearest mm Hg), and place the bulbs on the shaker table with their main axis either parallel to or perpendicular to the plane of the table top. Purge the bulb-filling system with ambient air for several minutes between samples. Shake the samples for exactly 2 hours.

Immediately after shaking, measure the absorbance (A) of each bulb sample at 425 nm if the concentration is less than or equal to 400 ppm CO or at 600 nm if the concentration

is above 400 ppm. This may be accomplished with multiple bulb sets by sequentially collecting sets and adding to the shaker at staggered intervals, followed by sequentially removing sets from the shaker for absorbance measurement after the two-hour designated intervals have elapsed.

Use a small portion of the sample to rinse a spectrophotometer cell several times before taking an aliquot for analysis. If one cell is used to analyze multiple samples, rinse the cell several times between samples with water.

Prepare and analyze standards and a reagent blank as described in Section 5.3. Use water as the reference. Reject the analysis if the blank absorbance is greater than 0.1. All conditions should be the same for analysis of samples and standards. Measure the absorbances as soon as possible after shaking is completed. Determine the CO concentration of each bag sample using the calibration curve for the appropriate concentration range as discussed in Section 5.3.

5. Calibration

5.1 *Bulb Calibration.* Weigh the empty bulb to the nearest 0.1 g. Fill the bulb to the stopcock with water, and again weigh to the nearest 0.1 g. Subtract the tare weight, and calculate the volume in liters to three significant figures using the density of water (at the measurement temperature). Record the volume on the bulb; alternatively, mark an identification number on the bulb, and record the volume in a notebook.

5.2 Rate Meter Calibration. Assemble the system as shown in Figure 10A–1 (the impingers may be removed), and attach a volume meter to the probe inlet. Set the rotameter at 300 ml/min, record the volume meter reading, start the pump, and pull gas through the system for 10 minutes. Record the final volume meter reading. Repeat the procedure and average the results to determine the volume of gas that passed through the system.

5.3 Spectrophotometer Calibration Curve. The calibration curve is established by taking at least two sets of three bulbs of known CO collected from Tedlar bags through the analysis procedure. Reject the standard set where any of the individual bulb absorbances differ from the set mean by more than 10 percent. Collect the standards as described in Section 4.2. Prepare standards to span the 0- to 400- or 400- to 1000-ppm range. If any samples span both concentration ranges, prepare a calibration curve for each range. A set of three bulbs containing colorimetric reagent but no CO should serve as a reagent blank and be taken through the analysis procedure.

Calculate the average absorbance for each set (3 bulbs) of standards using Equation 10A–1 and Table 10A–1. Construct a graph of average absorbance for each standard against its corresponding concentration in ppm. Draw a smooth curve through the points. The curve should be linear over the two concentration ranges discussed in Section 1.3.1.

6. Calculations

Carry out calculations retaining at least one extra decimal figure beyond that of the acquired data. Round off figures after final calculation.

6.1 Nomenclature.

A=Sample absorbance, uncorrected for the reagent blank.
A_r=Absorbance of the reagent blank.
A_s=Average sample absorbance per liter, units/liter.
B_w=Moisture content in the bag sample.
C=CO concentration in the stack gas, dry basis, ppm.
C_b=CO concentration of the bag sample, dry basis, ppm.
C_g=CO concentration from the calibration curve, ppm.
F=Volume fraction of CO_2 in the stack.
n=Number of reaction bulbs used per bag sample.
P_{bar}=Barometric pressure, mm Hg.
P_v=Residual pressure in the sample bulb after evacuation, mm Hg.
P_w=Vapor pressure of H_20 in the bag (from Table 10A–2), mm Hg.
V_b=Volume of the sample bulb, liters.
V_r=Volume of reagent added to the sample bulb, 0.0100 liter.

6.2 Average Sample Absorbance per Liter.

Average the three absorbance values for each bulb set. Then calculate A_s for each set of gas bulbs using Equation 10A–1. Use A_s to determine the CO concentration from the calibration curve (C_g).

$$A_s = \frac{(A - A_r)(P_{bar})}{(V_b - V_r)(P_{bar} - P_v)} \qquad \text{Eq. 10A-1}$$

NOTE: A and A_r must be at the same wavelength.

6.3 CO Concentration in the Bag.

Calculate C_b using Equations 10A–2 and 10A–3. If condensate is visible in the Tedlar bag, calculate B_w using Table 10A–2 and the temperature and barometric pressure in the analysis room. If condensate is not visible, calculate B_w using the temperature and barometric pressure recorded at the sampling site.

$$B_w = \frac{P_w}{P_{bar}} \qquad \text{Eq. 10A-2}$$

$$C_b = \frac{C_g}{(1 - B_w)} \qquad \text{Eq. 10A-3}$$

6.4 CO Concentration in the Stack.

$$C = C_b (1 - F) \qquad \text{Eq. 10A-4}$$

TABLE 10A-2. MOISTURE CORRECTION

Temperature, °C	Vapor pressure of H_2O, mm Hg	Temperature, °C	Vapor pressure of H_2O, mm Hg
4	6.1	18	15.5
6	7.0	20	17.5
8	8.0	22	19.8
10	9.2	24	22.4
12	10.5	26	25.2
14	12.0	28	28.3
16	13.6	30	31.8

7. BIBLIOGRAPHY

1. Butler, F.E., J.E. Knoll, and M.R. Midgett. Development and Evaluation of Methods for Determining Carbon Monoxide Emissions. Quality Assurance Division, Environmental Monitoring Systems Laboratory, U.S. Environmental Protection Agency, Research Triangle Park, NC 27711. June 1985. 33 p.

2. Ferguson, B.B., R.E. Lester, and W.J. Mitchell. Field Evaluation of Carbon Monoxide and Hydrogen Sulfide Continuous Emission Monitors at an Oil Refinery. U.S. Environmental Protection Agency. Research Triangle Park, NC. Publication No. EPA–600/4–82–054. August 1982. 100 p.

3. Lambert, J.L., and R.E. Weins. Induced Colorimetric Method for Carbon Monoxide. Analytical Chemistry. *46*(7):929–930. June 1974.

4. Levaggi, D.A., and M. Feldstein. The Colorimetric Determination of Low Concentrations of Carbon Monoxide. Industrial Hygiene Journal. *25*:64–66. January-February 1964.

5. Repp, M. Evaluation of Continuous Monitors for Carbon Monoxide in Stationary Sources. U.S. Environmental Protection Agency. Research Triangle Park, NC. Publication No. EPA–600/2–77–063. March 1977. 155 p.

6. Smith, F., D.E. Wagoner, and R.P. Donovan. Guidelines for Development of a Quality Assurance Program: Volume VIII—Determination of CO Emissions from Stationary Sources by NDIR Spectrometry. U.S. Environmental Protection Agency. Research Triangle Park, NC. Publication No. EPA–650/4–74–005–h. February 1975. 96 p.

METHOD 10B—DETERMINATION OF CARBON MONOXIDE EMISSIONS FROM STATIONARY SOURCES

1. Applicability and Principle

1.1 Applicability. This method applies to the measurement of carbon monoxide (CO) emissions at petroleum refineries and from other sources when specified in an applicable subpart of the regulations.

1.2 Principle. An integrated gas sample is extracted from the sampling point and analyzed for CO. The sample is passed through a conditioning system to remove interferences and collected in a Tedlar bag. The CO is separated from the sample by gas chromatography (GC) and catalytically reduced to methane (CH_4) prior to analysis by flame ionization detection FID. The analytical portion of this method is identical to applicable sections in Method 25 detailing CO measurement. The oxidation catalyst required in Method 25 is not needed for sample analysis. Complete Method 25 analytical systems are acceptable alternatives when calibrated for CO and operated by the Method 25 analytical procedures.

NOTE: Mention of trade names or commercial products in this method does not constitute the endorsement or recommendation for use by the Environmental Protection Agency.

1.3 Interferences. Carbon dioxide (CO_2) and organics potentially can interfere with the analysis. Carbon dioxide is primarily removed from the sample by the alkaline permanganate conditioning system; any residual CO_2 and organics are separated from the CO by GC.

2. Apparatus

2.1 Sampling. Same as in Method 10A, section 2.1.

2.2 Analysis.

2.2.1 Gas Chromatographic (GC) Analyzer. A semicontinuous GC/FID analyzer capable of quantifying CO in the sample and containing at least the following major components.

2.2.1.1 Separation Column. A column that separates CO from CO_2 and organic compounds that may be present. A ⅛-in. OD stainless-steel column packed with 5.5 ft of 60/80 mesh Carbosieve S–II (available from Supelco) has been used successfully for this purpose. The column listed in Addendum 1 of Method 25 is also acceptable.

2.2.1.2 Reduction Catalyst. Same as in Method 25, section 2.3.2.

2.2.1.3 Sample Injection System. Same as in Method 25, section 2.3.4, equipped to accept a sample line from the Tedlar bag.

2.2.1.4 Flame Ionization Detector. Linearity meeting the specifications in section 2.3.5.1 of Method 25 where the linearity check is carried out using standard gases containing 20–, 200–, and 1,000–ppm CO. The minimal instrument range shall span 10 to 1,000 ppm CO.

2.2.1.5 Data Recording System. Same as in Method 25, section 2.3.6.

3. *Reagents*

3.1 Sampling. Same as in Method 10A, section 3.1.

3.2 Analysis.

3.2.1 Carrier, Fuel, and Combustion Gases. Same as in Method 25, sections 3.2.1, 3.2.2, and 3.2.3.

3.2.2 Linearity and Calibration Gases. Three standard gases with nominal CO concentrations of 20–, 200–, and 1,000–ppm CO in nitrogen.

3.2.3 Reduction Catalyst Efficiency Check Calibration Gas. Standard CH_4 gas with a concentration of 1,000 ppm in air.

4. Procedure

4.1 Sample Bag Leak-checks, Sampling, and CO_2 Measurement. Same as in Method 10A, sections 4.1, 4.2, and 4.3.

4.2 Preparation for Analysis. Before putting the GC analyzer into routine operation, conduct the calibration procedures listed in section 5. Establish an appropriate carrier flow rate and detector temperature for the specific instrument used.

4.3 Sample Analysis. Purge the sample loop with sample, and then inject the sample. Analyze each sample in triplicate, and calculate the average sample area (A). Determine the bag CO concentration according to section 6.2.

5. Calibration

5.1 Carrier Gas Blank Check. Analyze each new tank of carrier gas with the GC analyzer according to section 4.3 to check for contamination. The corresponding concentration must be less than 5 ppm for the tank to be acceptable for use.

5.2 Reduction Catalyst Efficiency Check. Prior to initial use, the reduction catalyst shall be tested for reduction efficiency. With the heated reduction catalyst bypassed, make triplicate injections of the 1,000-ppm CH_4 gas (section 3.2.3) to calibrate the analyzer. Repeat the procedure using 1,000-ppm CO (section 3.2.2) with the catalyst in operation. The reduction catalyst operation is acceptable if the CO response is within 5 percent of the certified gas value.

5.3 Analyzer Linearity Check and Calibration. Perform this test before the system is first placed into operation. With the reduction catalyst in operation, conduct a linearity check of the analyzer using the standards specified in section 3.2.2. Make triplicate injections of each calibration gas, and then calculate the average response factor (area/ppm) for each gas, as well as the overall mean of the response factor values. The instrument linearity is acceptable if the average response factor of each calibration gas is within 2.5 percent of the overall mean value and if the relative standard deviation (calculated in section 6.9 of Method 25) for each set of triplicate injections is less than 2 percent. Record the overall mean of the response factor values as the calibration response factor (R).

6. Calculations

Carry out calculations retaining at least one extra decimal figure beyond that of the acquired data. Round off results only after the final calculation.

6.1 Nomenclature.

A=Average sample area.

B_w=Moisture content in the bag sample, fraction.

C=CO concentration in the stack gas, dry basis, ppm.

C_b=CO concentration in the bag sample, dry basis, ppm.

F=Volume fraction of CO_2 in the stack, fraction.

P_{bar}=Barometric pressure, mm Hg.

P_w=Vapor pressure H_2O in the bag (from Table 10–2, Method 10A), mm Hg.

R=Mean calibration response factor, area/ppm.

6.2 CO Concentration in the Bag. Calculate C_b using Equations 10B–1 and 10B–2. If condensate is visible in the Tedlar bag, calculate B_w using Table 10A–1 of Method 10A and the temperature and barometric pressure in the analysis room. If condensate is not visible, calculate B_w using the temperature and barometric pressure at the sampling site.

$$B_w = \frac{P_w}{P_{bar}} \qquad \text{Eq. 10B-1}$$

$$C_b = \frac{A}{R(1-B_w)} \qquad \text{Eq. 10B-2}$$

6.3 CO Concentration in the Stack.

$C=C_b(1-F)$

Eq. 10B–3

7. Bibliography

1. Butler, F.E, J.E. Knoll, and M.R. Midgett. Development and Evaluation of Methods for Determining Carbon Monoxide Emissions. Quality Assurance Division, Environmental Monitoring Systems Laboratory, U.S. Environmental Protection Agency, Research Triangle Park, NC 27711. June 1985. 33p.

2. Salo, A.E., S. Witz, and R.D. MacPhee. Determination of Solvent Vapor Concentrations by Total Combustion Analysis: A Comparison of Infrared with Flame Ionization Detectors. Paper No. 75–33.2. (Presented at the 68th Annual Meeting of the Air Pollution Control Association. Boston, MA. June 15, 1975.) 14 p.

3. Salo, A.E., W.L. Oaks, and R.D. MacPhee. Measuring the Organic Carbon Content of Source Emissions for Air Pollution Control. Paper No. 74–190. (Presented at the 67th Annual Meeting of the Air Pollution Control Association. Denver, CO. June 9, 1974.) 25 p.

METHOD 11—DETERMINATION OF HYDROGEN SULFIDE CONTENT OF FUEL GAS STREAMS IN PETROLEUM REFINERIES

1. *Principle and Applicability*

1.1 Principle. Hydrogen sulfide (H_2S) is collected from a source in a series of midget impingers and absorbed in pH 3.0 cadmium sulfate ($CdSO_4$) solution to form cadmium sulfide (CdS). The latter compound is then measured iodometrically. An impinger containing hydrogen peroxide is included to remove SO_2 as an interfering species. This method is a revision of the H_2S method originally published in the FEDERAL REGISTER, Volume 39, No. 47, dated Friday, March 8, 1974.

1.2 Applicability. This method is applicable for the determination of the hydrogen sulfide content of fuel gas streams at petroleum refineries.

2. *Range and Sensitivity*

The lower limit of detection is approximately 8 mg/m^3 (6 ppm). The maximum of the range is 740 mg/m^3 (520 ppm).

3. *Interferences*

Any compound that reduces iodine or oxidizes iodide ion will interfere in this procedure, provided it is collected in the cadmium sulfate impingers. Sulfur dioxide in concentrations of up to 2,600 mg/m^3 is eliminated by the hydrogen peroxide solution. Thiols precipitate with hydrogen sulfide. In the absence of H_2S, only co-traces of thiols are collected. When methane- and ethanethiols at a total level of 300 mg/m^3 are present in addition to H_2S, the results vary from 2 percent low at an H_2S concentration of 400 mg/m^3 to 14 percent high at an H_2S concentration of 100 mg/m^3. Carbon oxysulfide at a concentration of 20 percent does not interfere. Certain carbonyl-containing compounds react with iodine and produce recurring end points. However, acetaldehyde and acetone at concentrations of 1 and 3 percent, respectively, do not interfere.

Entrained hydrogen peroxide produces a negative interference equivalent to 100 percent of that of an equimolar quantity of hydrogen sulfide. Avoid the ejection of hydrogen peroxide into the cadmium sulfate impingers.

4. *Precision and Accuracy*

Collaborative testing has shown the within-laboratory coefficient of variation to be 2.2 percent and the overall coefficient of variation to be 5 percent. The method bias was shown to be −4.8 percent when only H_2S was present. In the presence of the interferences cited in section 3, the bias was positive at low H_2S concentration and negative at higher concentrations. At 230 mg H_2S/m^3, the level of the compliance standard, the bias

was +2.7 percent. Thiols had no effect on the precision.

5. *Apparatus*

5.1 Sampling Apparatus.

5.1.1 Sampling Line. Six to 7 mm (¼ in.) Teflon[1] tubing to connect the sampling train to the sampling valve.

5.1.2 Impingers. Five midget impingers, each with 30 ml capacity. The internal diameter of the impinger tip must be 1 mm ±0.05 mm. The impinger tip must be positioned 4 to 6 mm from the bottom of the impinger.

5.1.3 Tubing. Glass or Teflon connecting tubing for the impingers.

5.1.4 Ice Bath Container. To maintain absorbing solution at a low temperature.

5.1.5 Drying Tube. Tube packed with 6- to 16-mesh indicating-type silica gel, or equivalent, to dry the gas sample and protect the meter and pump. If the silica gel has been used previously, dry at 175 °C (350 °F) for 2 hours. New silica gel may be used as received. Alternatively, other types of desiccants (equivalent or better) may be used, subject to approval of the Administrator.

NOTE: Do not use more than 30 g of silica gel. Silica gel absorbs gases such as propane from the fuel gas stream, and use of excessive amounts of silica gel could result in errors in the determination of sample volume.

5.1.6 Sampling Valve. Needle valve or equivalent to adjust gas flow rate. Stainless steel or other corrosion-resistant material.

5.1.7 Volume Meter. Dry gas meter, sufficiently accurate to measure the sample volume within 2 percent, calibrated at the selected flow rate (~1.0 liter/min) and conditions actually encountered during sampling. The meter shall be equipped with a temperature gauge (dial thermometer or equivalent) capable of measuring temperature to within 3 °C (5.4 °F). The gas meter should have a petcock, or equivalent, on the outlet connector which can be closed during the leak check. Gas volume for one revolution of the meter must not be more than 10 liters.

5.1.8 Flow Meter. Rotameter or equivalent, to measure flow rates in the range from 0.5 to 2 liters/min (1 to 4 cfh).

5.1.9 Graduated Cylinder, 25 ml size.

5.1.10 Barometer. Mercury, aneroid, or other barometer capable of measuring atmospheric pressure to within 2.5 mm Hg (0.1 in. Hg). In many cases, the barometric reading may be obtained from a nearby National Weather Service station, in which case, the station value (which is the absolute barometric pressure) shall be requested and an adjustment for elevation differences between the weather station and the sampling point shall be applied at a rate of minus 2.5 mm Hg (0.1 in. Hg) per 30 m (100 ft) elevation increase or vice-versa for elevation decrease.

5.1.11 U-tube Manometer. 0–30 cm water column. For leak check procedure.

5.1.12 Rubber Squeeze Bulb. To pressurize train for leak check.

5.1.13 Tee, Pinchclamp, and Connecting Tubing. For leak check.

5.1.14 Pump. Diaphragm pump, or equivalent. Insert a small surge tank between the pump and rate meter to eliminate the pulsation effect of the diaphragm pump on the rotameter. The pump is used for the air purge at the end of the sample run; the pump is not ordinarily used during sampling, because fuel gas streams are usually sufficiently pressurized to force sample gas through the train at the required flow rate. The pump need not be leak-free unless it is used for sampling.

5.1.15 Needle Valve or Critical Orifice. To set air purge flow to 1 liter/min.

5.1.16 Tube Packed With Active Carbon. To filter air during purge.

5.1.17 Volumetric Flask. One 1,000 ml.

5.1.18 Volumetric Pipette. One 15 ml.

5.1.19 Pressure-Reduction Regulator. Depending on the sampling stream pressure, a pressure-reduction regulator may be needed to reduce the pressure of the gas stream entering the Teflon sample line to a safe level.

5.1.20 Cold Trap. If condensed water or amine is present in the sample stream, a corrosion-resistant cold trap shall be used immediately after the sample tap. The trap shall not be operated below 0 °C (32 °F) to avoid condensation of C_3 or C_4 hydrocarbons.

5.2 Sample Recovery.

5.2.1 Sample Container. Iodine flask, glass-stoppered: 500 ml size.

5.2.2 Pipette. 50 ml volumetric type.

5.2.3 Graduated Cylinders. One each 25 and 250 ml.

5.2.4 Flasks. 125 ml, Erlenmeyer.

5.2.5 Wash Bottle.

5.2.6 Volumetric Flasks. Three 1,000 ml.

5.3 Analysis.

5.3.1 Flask. 500 ml glass-stoppered iodine flask.

5.3.2 Burette. 50 ml.

5.3.3 Flask. 125 ml, Erlenmeyer.

5.3.4 Pipettes, Volumetric. One 25 ml; two each 50 and 100 ml.

5.3.5 Volumetric Flasks. One 1,000 ml; two 500 ml.

5.3.6 Graduated Cylinders. One each 10 and 100 ml.

6. *Reagents*

Unless otherwise indicated, it is intended that all reagents conform to the specifications established by the Committee on Analytical Reagents of the American Chemical Society, where such specifications are available. Otherwise, use best available grade.

6.1 Sampling.

[1] Mention of trade names or specific products does not constitute endorsement by the Environmental Protection Agency.

6.1.1 Cadmium Sulfate Absorbing Solution. Dissolve 41 g of $3CdSO_4 \bullet 8H_2O$ and 15 ml of 0.1 M sulfuric acid in a 1-liter volumetric flask that contains approximately ¾ liter of deionized distilled water. Dilute to volume with deionized water. Mix thoroughly. pH should be 3±0.1. Add 10 drops of Dow-Corning Antifoam B. Shake well before use. If Antifoam B is not used, the alternative acidified iodine extraction procedure (Section 7.2.2) must be used.

6.1.2 Hydrogen Peroxide, 3 Percent. Dilute 30 percent hydrogen peroxide to 3 percent as needed. Prepare fresh daily.

6.1.3 Water. Deionized, distilled to conform to ASTM specifications D1193–72, Type 3. At the option of the analyst, the $KMnO_4$ test for oxidizable organic matter may be omitted when high concentrations of organic matter are not expected to be present.

6.2 Sample Recovery.

6.2.1 Hydrochloric Acid Solution (HCl), 3M. Add 240 ml of concentrated HCl (specific gravity 1.19) to 500 ml of deionized, distilled water in a 1-liter volumetric flask. Dilute to 1 liter with deionized water. Mix thoroughly.

6.2.2 Iodine Solution 0.1 N. Dissolve 24 g of potassium iodide (KI) in 30 ml of deionized, distilled water. Add 12.7 g of resublimed iodine (I_2) to the potassium iodide solution. Shake the mixture until the iodine is completely dissolved. If possible, let the solution stand overnight in the dark. Slowly dilute the solution to 1 liter with deionized, distilled water, with swirling. Filter the solution if it is cloudy. Store solution in a brown-glass reagent bottle.

6.2.3 Standard Iodine Solution, 0.01 N. Pipette 100.0 ml of the 0.1 N iodine solution into a 1-liter volumetric flask and dilute to volume with deionized, distilled water. Standardize daily as in Section 8.1.1. This solution must be protected from light. Reagent bottles and flasks must be kept tightly stoppered.

6.3 Analysis.

6.3.1 Sodium Thiosulfate Solution, Standard 0.1 N. Dissolve 24.8 g of sodium thiosulfate pentahydrate ($Na_2S_2O_3 \bullet 5H_2O$) or 15.8 g of anhydrous sodium thiosulfate ($Na_2S_2O_3$) in 1 liter of deionized, distilled water and add 0.01 g of anhydrous sodium carbonate (Na_2CO_3) and 0.4 ml of chloroform ($CHCl_3$) to stabilize. Mix thoroughly by shaking or by aerating with nitrogen for approximately 15 minutes and store in a glass-stoppered, reagent bottle. Standardize as in Section 8.1.2.

6.3.2 Sodium Thiosulfate Solution, Standard 0.01 N. Pipette 50.0 ml of the standard 0.1 N thiosulfate solution into a volumetric flask and dilute to 500 ml with distilled water.

NOTE: A 0.01 N phenylarsine oxide solution may be prepared instead of 0.01 N thiosulfate (see Section 6.3.3).

6.3.3 Phenylarsine Oxide Solution, Standard 0.01 N. Dissolve 1.80 g of phenylarsine oxide (C_6H_5AsO) in 150 ml of 0.3 N sodium hydroxide. After settling, decant 140 ml of this solution into 800 ml of distilled water. Bring the solution to pH 6–7 with 6N hydrochloric acid and dilute to 1 liter. Standardize as in Section 8.1.3.

6.3.4 Starch Indicator Solution. Suspend 10 g of soluble starch in 100 ml of deionized, distilled water and add 15 g of potassium hydroxide (KOH) pellets. Stir until dissolved, dilute with 900 ml of deionized distilled water and let stand for 1 hour. Neutralize the alkali with concentrated hydrochloric acid, using an indicator paper similar to Alkacid test ribbon, then add 2 ml of glacial acetic acid as a preservative.

NOTE: Test starch indicator solution for decomposition by titrating, with 0.01 N iodine solution, 4 ml of starch solution in 200 ml of distilled water that contains 1 g potassium iodide. If more than 4 drops of the 0.01 N iodine solution are required to obtain the blue color, a fresh solution must be prepared.

7. *Procedure*

7.1 Sampling.

7.1.1 Assemble the sampling train as shown in Figure 11–1, connecting the five midget impingers in series. Place 15 ml of 3 percent hydrogen peroxide solution in the first impinger. Leave the second impinger empty. Place 15 ml of the cadmium sulfate absorbing solution in the third, fourth, and fifth impingers. Place the impinger assembly in an ice bath container and place crushed ice around the impingers. Add more ice during the run, if needed.

7.1.2 Connect the rubber bulb and manometer to first impinger, as shown in Figure 11–1. Close the petcock on the dry gas meter outlet. Pressurize the train to 25-cm water pressure with the bulb and close off tubing connected to rubber bulb. The train must hold a 25-cm water pressure with not more than a 1-cm drop in pressure in a 1-minute interval. Stopcock grease is acceptable for sealing ground glass joints.

NOTE: This leak check procedure is optional at the beginning of the sample run, but is mandatory at the conclusion. Note also that if the pump is used for sampling, it is recommended (but not required) that the pump be leak-checked separately, using a method consistent with the leak-check procedure for diaphragm pumps outlined in Section 4.1.2 of Method 6, 40 CFR part 60, appendix A.

7.1.3 Purge the connecting line between the sampling valve and first impinger, by disconnecting the line from the first impinger, opening the sampling valve, and allowing process gas to flow through the line for a minute or two. Then, close the sampling valve and reconnect the line to the impinger train. Open the petcock on the dry

gas meter outlet. Record the initial dry gas meter reading.

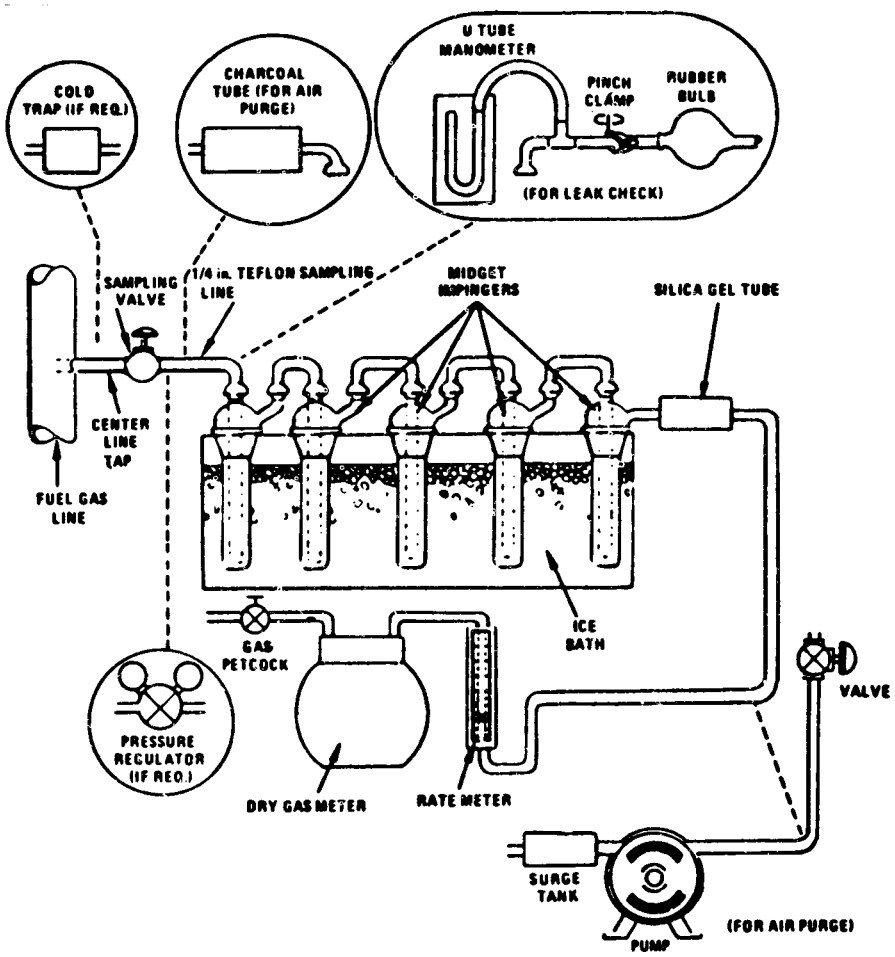

Figure 11-1. H_2S sampling train.

7.1.4 Open the sampling valve and then adjust the valve to obtain a rate of approximately 1 liter/min. Maintain a constant (±10 percent) flow rate during the test. Record the meter temperature.

7.1.5 Sample for at least 10 min. At the end of the sampling time, close the sampling valve and record the final volume and temperature readings. Conduct a leak check as described in Section 7.1.2 above.

7.1.6 Disconnect the impinger train from the sampling line. Connect the charcoal tube and the pump, as shown in Figure 11–1. Purge the train (at a rate of 1 liter/min) with clean ambient air for 15 minutes to ensure that all H_2S is removed from the hydrogen peroxide. For sample recovery, cap the open ends and remove the impinger train to a clean area that is away from sources of heat. The area should be well lighted, but not exposed to direct sunlight.

7.2 Sample Recovery.

7.2.1 Discard the contents of the hydrogen peroxide impinger. Carefully rinse the contents of the third, fourth, and fifth impingers into a 500 ml iodine flask.

NOTE: The impingers normally have only a thin film of cadmium sulfide remaining after a water rinse. If Antifoam B was not used or if significant quantities of yellow cadmium sulfide remain in the impingers, the alternative recovery procedure described below must be used.

7.2.2 Pipette exactly 50 ml of 0.01 N iodine solution into a 125 ml Erlenmeyer flask. Add 10 ml of 3 M HCl to the solution. Quantitatively rinse the acidified iodine into the iodine flask. Stopper the flask immediately and shake briefly.

7.2.2 (Alternative). Extract the remaining cadmium sulfide from the third, fourth, and fifth impingers using the acidified iodine solution. Immediately after pouring the acidified iodine into an impinger, stopper it and shake for a few moments, then transfer the liquid to the iodine flask. Do not transfer any rinse portion from one impinger to another; transfer it directly to the iodine flask. Once the acidified iodine solution has been poured into any glassware containing cadmium sulfide, the container must be tightly stoppered at all times except when adding more solution, and this must be done as quickly and carefully as possible. After adding any acidified iodine solution to the iodine flask, allow a few minutes for absorption of the H_2S before adding any further rinses. Repeat the iodine extraction until all cadmium sulfide is removed from the impingers. Extract that part of the connecting glassware that contains visible cadmium sulfide.

Quantitatively rinse all of the iodine from the impingers, connectors, and the beaker into the iodine flask using deionized, distilled water. Stopper the flask and shake briefly.

7.2.3 Allow the iodine flask to stand about 30 minutes in the dark for absorption of the H_2S into the iodine, then complete the titration analysis as in Section 7.3.

NOTE: Caution! Iodine evaporates from acidified iodine solutions. Samples to which acidified iodine have been added may not be stored, but must be analyzed in the time schedule stated in Section 7.2.3.

7.2.4 Prepare a blank by adding 45 ml of cadmium sulfate absorbing solution to an iodine flask. Pipette exactly 50 ml of 0.01 N iodine solution into a 125-ml Erlenmeyer flask. Add 10 ml of 3 M HCl. Follow the same impinger extracting and quantitative rinsing procedure carried out in sample analysis. Stopper the flask, shake briefly, let stand 30 minutes in the dark, and titrate with the samples.

NOTE: The blank must be handled by exactly the same procedure as that used for the samples.

7.3 Analysis.

NOTE: Titration analyses should be conducted at the sample-cleanup area in order to prevent loss of iodine from the sample. Titration should never be made in direct sunlight.

7.3.1 Using 0.01 N sodium thiosulfate solution (or 0.01 N phenylarsine oxide, if applicable), rapidly titrate each sample in an iodine flask using gentle mixing, until solution is light yellow. Add 4 ml of starch indicator solution and continue titrating slowly until the blue color just disappears. Record V_{TT}, the volume of sodium thiosulfate solution used, or V_{AT}, the volume of phenylarsine oxide solution used (ml).

7.3.2 Titrate the blanks in the same manner as the samples. Run blanks each day until replicate values agree within 0.05 ml. Average the replicate titration values which agree within 0.05 ml.

8. *Calibration and Standards*

8.1 Standardizations.

8.1.1 Standardize the 0.01 N iodine solution daily as follows: Pipette 25 ml of the iodine solution into a 125 ml Erlenmeyer flask. Add 2 ml of 3 M HCl. Titrate rapidly with standard 0.01 N thiosulfate solution or with 0.01 N phenylarsine oxide until the solution is light yellow, using gentle mixing. Add four drops of starch indicator solution and continue titrating slowly until the blue color just disappears. Record V_T, the volume of thiosulfate solution used, or V_{AS}, the volume of phenylarsine oxide solution used (ml). Repeat until replicate values agree within 0.05 ml. Average the replicate titration values which agree within 0.05 ml and calculate the exact normality of the iodine solution using Equation 11–3. Repeat the standardization daily.

8.1.2 Standardize the 0.1 N thiosulfate solution as follows: Oven-dry potassium dichromate ($K_2Cr_2O_7$) at 180 to 200 °C (360 to 390 °F). Weigh to the nearest milligram, 2 g of potassium dichromate. Transfer the dichromate to a 500 ml volumetric flask, dissolve in deionized, distilled water and dilute to exactly 500 ml. In a 500 ml iodine flask, dissolve approximately 3 g of potassium iodide (KI) in 45 ml of deionized, distilled water, then add 10 ml of 3 M hydrochloric acid solution. Pipette 50 ml of the dichromate solution into this mixture. Gently swirl the solution once and allow it to stand in the dark for 5 minutes. Dilute the solution with 100 to 200 ml of deionized distilled water, washing down the sides of the flask with part of the water. Titrate with 0.1 N thiosulfate until the solution is light yellow. Add 4 ml of starch indicator and continue titrating slowly to a green end point. Record V_S, the volume of thiosulfate solution used (ml). Repeat until replicate analyses agree within 0.05 ml. Calculate the normality using Equation 11–1. Repeat the standardization each week, or

after each test series, whichever time is shorter.

8.1.3 Standardize the 0.01 N Phenylarsine oxide (if applicable) as follows: oven dry potassium dichromate ($K_2Cr_2O_7$) at 180 to 200 °C (360 to 390 °F). Weigh to the nearest milligram, 2 g of the $K_2Cr_2O_7$; transfer the dichromate to a 500 ml volumetric flask, dissolve in deionized, distilled water, and dilute to exactly 500 ml. In a 500 ml iodine flask, dissolve approximately 0.3 g of potassium iodide (KI) in 45 ml of deionized, distilled water; add 10 ml of 3M hydrochloric acid. Pipette 5 ml of the $K_2Cr_2O_7$ solution into the iodine flask. Gently swirl the contents of the flask once and allow to stand in the dark for 5 minutes. Dilute the solution with 100 to 200 ml of deionized, distilled water, washing down the sides of the flask with part of the water. Titrate with 0.01 N phenylarsine oxide until the solution is light yellow. Add 4 ml of starch indicator and continue titrating slowly to a green end point. Record V_A, the volume of phenylarsine oxide used (ml). Repeat until replicate analyses agree within 0.05 ml. Calculate the normality using Equation 11–2. Repeat the standardization each week or after each test series, whichever time is shorter.

8.2 Sampling Train Calibration. Calibrate the sampling train components as follows:

8.2.1 Dry Gas Meter.

8.2.1.1 Initial Calibration. The dry gas meter shall be calibrated before its initial use in the field. Proceed as follows: First, assemble the following components in series: Drying tube, needle valve, pump, rotameter, and dry gas meter. Then, leak-check the system as follows: Place a vacuum gauge (at least 760 mm Hg) at the inlet to the drying tube and pull a vacuum of 250 mm (10 in.) Hg; plug or pinch off the outlet of the flow meter, and then turn off the pump. The vacuum shall remain stable for at least 30 seconds. Carefully release the vacuum gauge before releasing the flow meter end.

Next, calibrate the dry gas meter (at the sampling flow rate specified by the method) as follows: Connect an appropriately sized wet test meter (e.g., 1 liter per revolution) to the inlet of the drying tube. Make three independent calibration runs, using at least five revolutions of the dry gas meter per run. Calculate the calibration factor, *Y* (wet test meter calibration volume divided by the dry gas meter volume, both volumes adjusted to the same reference temperature and pressure), for each run, and average the results. If any *Y* value deviates by more than 2 percent from the average, the dry gas meter is unacceptable for use. Otherwise, use the average as the calibration factor for subsequent test runs.

8.2.1.2 Post-test Calibration Check. After each field test series, conduct a calibration check as in Section 8.2.1.1. above, except for the following variations: (a) The leak check is not to be conducted, (b) three or more revolutions of the dry gas meter may be used, and (c) only two independent runs need be made. If the calibration factor does not deviate by more than 5 percent from the initial calibration factor (determined in Section 8.2.1.1.), then the dry gas meter volumes obtained during the test series are acceptable. If the calibration factor deviates by more than 5 percent, recalibrate the dry gas meter as in Section 8.2.1.1, and for the calculations, use the calibration factor (initial or recalibration) that yields the lower gas volume for each test run.

8.2.2 Thermometers. Calibrate against mercury-in-glass thermometers.

8.2.3 Rotameter. The rotameter need not be calibrated, but should be cleaned and maintained according to the manufacturer's instruction.

8.2.4 Barometer. Calibrate against a mercury barometer.

9. *Calculations*

Carry out calculations retaining at least one extra decimal figure beyond that of the acquired data. Round off results only after the final calculation.

9.1 Normality of the Standard (~0.1 N) Thiosulfate Solution.

$$N_S = 2.039 W / V_S$$

Eq. 11–1

where:

W=Weight of $K_2Cr_2O_7$ used, g.
V_S=Volume of $Na_2S_2O_3$ solution used, ml.
N_S=Normality of standard thiosulfate solution, g-eq/liter.
2.039=Conversion factor

(6 eq. I_2/MOLE $K_2CR_2O_7$) (1,000 ML/LITER)/ (294.2 G $K_2CR_2O_7$/MOLE) (10 ALIQUOT FACTOR)

9.2 Normality of Standard Phenylarsine Oxide Solution (if applicable).

$$N_A = 0.2039\ W / V_A$$

Eq. 11–2

where:

W=Weight of $K_2Cr_2O_7$ used, g.
V_A=Volume of $C_6H_5A_sO$ used, ml.
N_A=Normality of standard phenylarsine oxide solution, g-eq/liter.
0.2039=Conversion factor

(6 eq. I_2/MOLE $K_2CR_2O_7$) (1,000 ML/LITER)/(249.2 G $K_2CR_2O_7$/MOLE) (100 ALIQUOT FACTOR)

9.3 Normality of Standard Iodine Solution.

$$N_I = N_T V_T / V_I$$

11–3

where:

N_I=Normality of standard iodine solution, g-eq/liter.
V_I=Volume of standard iodine solution used, ml.

N_T=Normality of standard (~0.01 N) thiosulfate solution; assumed to be 0.1 N_S, g-eq/liter.

V_T=Volume of thiosulfate solution used, ml.

NOTE: If phenylarsine oxide is used instead of thiosulfate, replace N_T and V_T in Equation 11–3 with N_A and V_{AS}, respectively (see Sections 8.1.1 and 8.1.3).

9.4 Dry Gas Volume. Correct the sample volume measured by the dry gas meter to standard conditions (20 °C and 760 mm Hg.)

$$V_{m(std)}=V_m\ Y\ [(T_{std}/T_m)\ (P_{bar}/P_{std})]$$

Eq. 11–4

Where:

$V_{m(std)}$=Volume at standard conditions of gas sample through the dry gas meter, standard liters.

V_m=Volume of gas sample through the dry gas meter (meter conditions), liters.

T_{std}=Absolute temperature at standard conditions, 293°K.

T_m=Average dry gas meter temperature, °K.

P_{bar}=Barometric pressure at the sampling site, mm Hg.

P_{std}=Absolute pressure at standard conditions, 760 mm Hg.

Y=Dry gas meter calibration factor.

9.5 Concentration of H_2S. Calculate the concentration of H_2S in the gas stream at standard conditions using the following equation:

$$C_{H2S}=K[(V_{IT}N_I-V_{TT}N_T)\ \text{sample}—(V_{IT}\ N_I-V_{TT}\ N_T)]/V_{m(std)}$$

Eq. 11–5

Where (metric units):

C_{H2S}=Concentration of H_2S at standard conditions, mg/dscm.

K=Conversion factor 17.04×10^3

(34.07 g/mole H_2S) (1,000 LITERS/M^3) (1,000 MG/G)/(1,000 ML/LITER) ($2H_2S$ EQ/MOLE)

V_{IT}=Volume of standard iodine solution=50.0 ml.

N_I=Normality of standard iodine solution, g-eq/liter.

V_{TT}=Volume of standard (~0.01 N) sodium thiosulfate solution, ml.

N_T=Normality of standard sodium thiosulfate solution, g-eq/liter.

$V_{m(std)}$=Dry gas volume at standard conditions, liters.

NOTE: If phenylarsine oxide is used instead of thiosulfate, replace N_T and V_{TT} in Equation 11–5 with N_A and V_{AT}, respectively (see Sections 7.3.1 and 8.1.3).

10. *Stability*

The absorbing solution is stable for at least 1 month. Sample recovery and analysis should begin within 1 hour of sampling to minimize oxidation of the acidified cadmium sulfide. Once iodine has been added to the sample, the remainder of the analysis procedure must be completed according to Sections 7.2.2 through 7.3.2.

11. *Bibliography*

1. Determination of Hydrogen Sulfide, Ammoniacal Cadmium Chloride Method. API Method 772–54. In: Manual on Disposal of Refinery Wastes, Vol. V: Sampling and Analysis of Waste Gases and Particulate Matter, American Petroleum Institute, Washington, DC. 1954.

2. Tentative Method of Determination of Hydrogen Sulfide and Mercaptan Sulfur in Natural Gas, Natural Gas Processors Association, Tulsa, OK. NGPA Publication No. 2265–65. 1965.

3. Knoll, J. E., and M. R. Midgett. Determination of Hydrogen Sulfide in Refinery Fuel Gases, Environmental Monitoring Series, Office of Research and Development, USEPA, Research Triangle Park, NC 27711, EPA 600/4–77–007.

4. Scheil, G. W., and M. C. Sharp. Standardization of Method 11 at a Petroleum Refinery, Midwest Research Institute Draft Report for USEPA, Office of Research and Development, Research Triangle Park, NC 27711, EPA Contract No. 68–02–1098. August 1976, EPA 600/4–77–088a (Volume 1) and EPA 600/4–77–088b (Volume 2).

METHOD 12—DETERMINATION OF INORGANIC LEAD EMISSIONS FROM STATIONARY SOURCES

1. *Principle and Applicability*

1.1 Applicability. This method applies to the determination of inorganic lead (Pb) emissions from specified stationary sources only.

1.2 Principle. Particulate and gaseous Pb emissions are withdrawn isokinetically from the source and collected on a filter and in dilute nitric acid. The collected samples are digested in acid solution and analyzed by atomic absorption spectrometry using an air acetylene flame.

2. *Range, Sensitivity, Precision, and Interferences*

2.1 Range. For a minimum analytical accuracy of ±10 percent, the lower limit of the range is 100 μg. The upper limit can be considerably extended by dilution.

2.2 Analytical Sensitivity. Typical sensitivities for a 1-percent change in absorption (0.0044 absorbance units) are 0.2 and 0.5 μg Pb/ml for the 217.0 and 283.3 nm lines, respectively.

2.3 Precision. The within-laboratory precision, as measured by the coefficient of variation ranges from 0.2 to 9.5 percent relative to a run-mean concentration. These values were based on tests conducted at a gray iron foundry, a lead storage battery manufacturing plant, a secondary lead smelter, and a

lead recovery furnace of an alkyl lead manufacturing plant. The concentrations encountered during these tests ranged from 0.61 to 123.3 mg Pb/m^3.

2.4 Interferences. Sample matrix effects may interfere with the analysis for Pb by flame atomic absorption. If this interference is suspected, the analyst may confirm the presence of these matrix effects and frequently eliminate the interference by using the Method of Standard Additions.

High concentrations of copper may interfere with the analysis of Pb at 217.0 nm. This interference can be avoided by analyzing the samples at 283.3 nm.

3. *Apparatus*

3.1 Sampling Train. A schematic of the sampling train is shown in Figure 12–1; it is similar to the Method 5 train. The sampling train consists of the following components:

3.1.1 Probe Nozzle, Probe Liner, Pitot Tube, Differential Pressure Gauge, Filter Holder, Filter Heating System, Metering System, Barometer, and Gas Density Determination Equipment. Same as Method 5, Sections 2.1.1 to 2.1.6 and 2.1.8 to 2.1.10, respectively.

3.1.2 Impingers. Four impingers connected in series with leak-free ground glass fittings or any similar leak-free noncontaminating fittings. For the first, third, and fourth impingers, use the Greenburg-Smith design, modified by replacing the tip with a 1.3 cm (½ in.) ID glass tube extending to about 1.3 cm (½ in.) from the bottom of the flask. For the second impinger, use the Greenburg-Smith design with the standard tip. Place a thermometer, capable of measuring temperature to within 1 °C (2 °F) at the outlet of the fourth impinger for monitoring purposes.

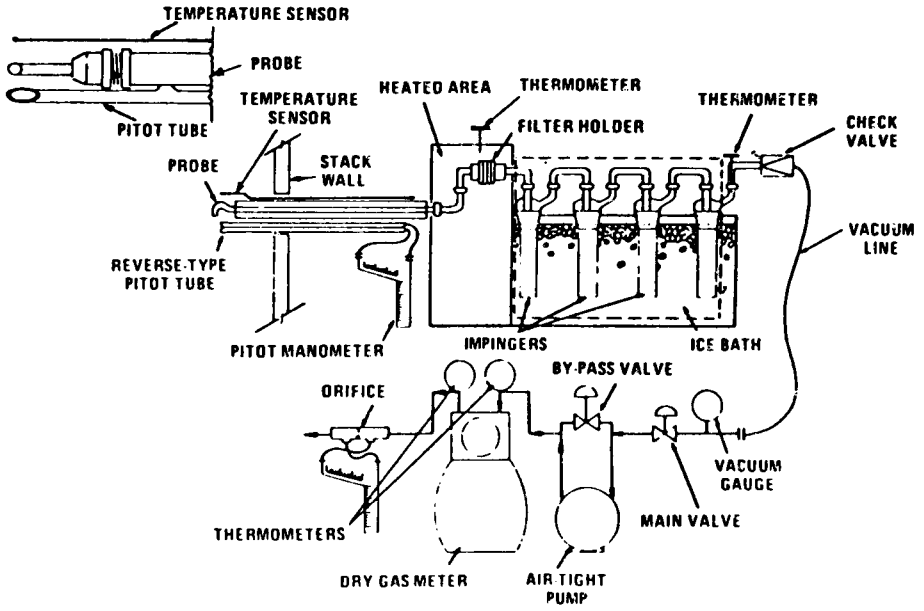

Figure 12-1. Inorganic lead sampling train.

3.2 Sample Recovery. The following items are needed:

3.2.1 Probe-Liner and Probe-Nozzle Brushes, Petri Dishes, Plastic Storage Containers, and Funnel and Rubber Policeman. Same as Method 5, Sections 2.2.1, 2.2.4, 2.2.6, and 2.2.7, respectively.

3.2.2 Wash Bottles. Glass (2).

3.2.3 Sample Storage Containers. Chemically resistant, borosilicate glass bottles, for 0.1 N nitric acid (HNO_3) impinger and probe solutions and washes, 1000-ml. Use screw-cap liners that are either rubber-backed Teflon*

*Mention of trade names or specific products does not constitute endorsement by the U.S. Environmental Protection Agency.

or leak-free and resistant to chemical attack by 0.1 N HNO_3. (Narrow mouth glass bottles have been found to be less prone to leakage.)

3.2.4 Graduated Cylinder and/or Balance. To measure condensed water to within 2 ml or 1 g. Use a graduated cylinder that has a minimum capacity of 500 ml, and subdivisions no greater than 5 ml. (Most laboratory balances are capable of weighing to the nearest 0.5 g or less.)

3.2.5 Funnel. Glass, to aid in sample recovery.

3.3 Analysis. The following equipment is needed:

3.3.1 Atomic Absorption Spectrophotometer. With lead hollow cathode lamp and burner for air/acetylene flame.

3.3.2 Hot Plate.

3.3.3 Erlenmeyer Flasks. 125-ml, 24/40 $.

3.3.4 Membrane Filters. Millipore SCWPO 4700 or equivalent.

3.3.5 Filtration Apparatus. Millipore vacuum filtration unit, or equivalent, for use with the above membrane filter.

3.3.6 Volumetric Flasks. 100-ml, 250-ml, and 1000-ml.

4. *Reagents*

4.1 Sampling. The reagents used in sampling are as follows:

4.1.1 Filter. Gelman Spectro Grade, Reeve Angel 934 AH, MSA 1106 BH, all with lot assay for Pb, or other high-purity glass fiber filters, without organic binder, exhibiting at least 99.95 percent efficiency (<0.05 percent penetration) on 0.3 micron dioctyl phthalate smoke particles. Conduct the filter efficiency test using ASTM Standard Method D2986–71 (incorporated by reference—see §60.17) or use test data from the supplier's quality control program.

4.1.2 Silica Gel, Crushed Ice, and Stopcock Grease. Same as Method 5, Sections 3.1.2, 3.1.4, and 3.1.5, respectively.

4.1.3 Water. Deionized distilled, to conform to ASTM Specification D1192–77 (incorporated by reference—see §60.17), Type 3. If high concentrations of organic matter are not expected to be present, the analyst may delete the potassium permanganate test for oxidizable organic matter.

4.1.4 Nitric Acid, 0.1 N. Dilute 6.5 ml of concentrated HNO_3 to 1 liter with deionized distilled water. (It may be desirable to run blanks before field use to eliminate a high blank on test samples.)

4.2 Pretest Preparation. 6 N HNO_3 is needed. Dilute 390 ml of concentrated HNO_3 to 1 liter with deionized distilled water.

4.3 Sample Recovery. 0.1 N HNO_3 (same as 4.1.4 above) is needed for sample recovery.

4.4 Analysis. The following reagents are needed for analysis (use ACS reagent grade chemicals or equivalent, unless otherwise specified):

4.4.1 Water. Same as 4.1.3 above.

4.4.2 Nitric Acid. Concentrated.

4.4.3 Nitric Acid, 50 percent (V/V). Dilute 500 ml of concentrated HNO_3 to 1 liter with deionized distilled water.

4.4.4 Stock Lead Standard Solution, 1000 µg Pb/ml. Dissolve 0.1598 g of lead nitrate [$Pb(NO_3)_2$] in about 60 ml of deionized distilled water, add 2 ml concentrated HNO_3, and dilute to 100 ml with deionized distilled water.

4.4.5 Working Lead Standards. Pipet 0.0, 1.0, 2.0, 3.0, 4.0, and 5.0 ml of the stock lead standard solution (4.4.4) into 250-ml volumetric flasks. Add 5 ml of concentrated HNO_3 to each flask and dilute to volume with deionized distilled water. These working standards contain 0.0, 4.0, 8.0, 12.0, 16.0, and 20.0 µg Pb/ml, respectively. Prepare, as needed, additional standards at other concentrations in a similar manner.

4.4.6 Air. Suitable quality for atomic absorption analysis.

4.4.7 Acetylene. Suitable quality for atomic absorption analysis.

4.4.8 Hydrogen Peroxide, 3 percent (V/V). Dilute 10 ml of 30 percent H_2O_2 to 100 ml with deionized distilled water.

5. *Procedure*

5.1 Sampling. The complexity of this method is such that, in order to obtain reliable results, testers should be trained and experienced with the test procedures.

5.1.1 Pretest Preparation. Follow the same general procedure given in Method 5, Section 4.1.1, except the filter need not be weighed.

5.1.2 Preliminary Determinations. Follow the same general procedure given in Method 5, Section 4.1.2.

5.1.3 Preparation of Collection Train. Follow the same general procedure given in Method 5, Section 4.1.3, except place 100 ml of 0.1 N HNO_3 in each of the first two impingers, leave the third impinger empty, and transfer approximately 200 to 300 g of preweighed silica gel from its container to the fourth impinger. Set up the train as shown in Figure 12–1.

5.1.4 Leak-Check Procedures. Follow the general leak-check procedures given in Method 5, Sections 4.1.4.1. (Pretest Leak-Check), 4.1.4.2 (Leak-Checks During the Sample Run), and 4.1.4.3 (Post-Test Leak-Check).

5.1.5 Sampling Train Operation. Follow the same general procedure given in Method 5, Section 4.1.5. For each run, record the data required on a data sheet such as the one shown in EPA Method 5, Figure 5–2.

5.1.6 Calculation of Percent Isokinetic. Same as Method 5, Section 4.1.6.

5.2 Sample Recovery. Begin proper cleanup procedure as soon as the probe is removed from the stack at the end of the sampling period.

Allow the probe to cool. When it can be safely handled, wipe off all external particulate matter near the tip of the probe nozzle and place a cap over it. Do not cap off the probe tip tightly while the sampling train is cooling down as this would create a vacuum in the filter holder, thus drawing liquid from the impingers into the filter.

Before moving the sampling train to the cleanup site, remove the probe from the sampling train, wipe off the silicone grease, and cap the open outlet of the probe. Be careful not to lose any condensate that might be present. Wipe off the silicone grease from the glassware inlet where the probe was fastened and cap the inlet. Remove the umbilical cord from the last impinger and cap the impinger. The tester may use ground-glass stoppers, plastic caps, or serum caps to close these openings.

Transfer the probe and filter-impinger assembly to a cleanup area, which is clean and protected from the wind so that the chances of contaminating or losing the sample are minimized.

Inspect the train prior to and during disassembly and note any abnormal conditions. Treat the samples as follows:

5.2.1 *Container No. 1* (Filter), Carefully remove the filter from the filter holder and place it in its identified petri dish container. If it is necessary to fold the filter, do so such that the sample-exposed side is inside the fold. Carefully transfer to the petri dish any visible sample matter and/or filter fibers that adhere to the filter holder gasket by using a dry Nylon bristle brush and/or a sharp-edged blade. Seal the container.

5.2.2 *Container No. 2* (Probe). Taking care that dust on the outside of the probe or other exterior surfaces does not get into the sample, quantitatively recover sample matter or any condensate from the probe nozzle, probe fitting, probe liner, and front half of the filter holder by washing these components with 0.1 N HNO_3 and placing the wash into a glass sample storage container. Measure and record (to the nearest 2-ml) the total amount of 0.1 N HNO_3 used for each rinse. Perform the 0.1 N HNO_3 rinses as follows:

Carefully remove the probe nozzle and rinse the inside surfaces with 0.1 N HNO_3 from a wash bottle while brushing with a stainless steel, Nylon-bristle brush. Brush until the 0.1 N HNO_3 rinse shows no visible particles, then make a final rinse of the inside surface.

Brush and rinse with 0.1 N HNO_3 the inside parts of the Swagelok fitting in a similar way until no visible particles remain.

Rinse the probe liner with 0.1 N HNO_3. While rotating the probe so that all inside surfaces will be rinsed with 0.1 N HNO_3, tilt the probe and squirt 0.1 N HNO_3 into its upper end. Let the 0.1 N HNO_3 drain from the lower end into the sample container. The tester may use a glass funnel to aid in transferring liquid washes to the container. Follow the rinse with a probe brush. Hold the probe in an inclined position, squirt 0.1 N HNO_3 into the upper end of the probe as the probe brush is being pushed with a twisting action through the probe; hold the sample container underneath the lower end of the probe and catch any 0.1 N HNO_3 and sample matter that is brushed from the probe. Run the brush through the probe three times or more until no visible sample matter is carried out with the 0.1 N HNO_3 and none remains on the probe liner on visual inspection. With stainless steel or other metal probes, run the brush through in the above prescribed manner at least six times, since metal probes have small crevices in which sample matter can be entrapped. Rinse the brush with 0.1 N HNO_3 and quantitatively collect these washings in the sample container. After the brushing make a final rinse of the probe as described above.

It is recommended that two people clean the probe to minimize loss of sample. Between sampling runs, keep brushes clean and protected from contamination.

After insuring that all joints are wiped clean of silicone grease, brush and rinse with 0.1 N HNO_3 the inside of the front half of the filter holder. Brush and rinse each surface three times or more, if needed, to remove visible sample matter. Make a final rinse of the brush and filter holder. After all 0.1 N HNO_3 washings and sample matter are collected in the sample container, tighten the lid on the sample container so that the fluid will not leak out when it is shipped to the laboratory. Mark the height of the fluid level to determine whether leakage occurs during transport. Label the container to clearly identify its contents.

5.2.3 *Container No. 3* (Silica Gel). Check the color of the indicating silica gel to determine if it has been completely spent and make a notation of its condition. Transfer the silica gel from the fourth impinger to the original container and seal. The tester may use a funnel to pour the silica gel and a rubber policeman to remove the silica gel from the impinger. It is not necessary to remove the small amount of particles that may adhere to the walls and are difficult to remove. Since the gain in weight is to be used for moisture calculations, do not use any water or other liquids to transfer the silica gel. If a balance is available in the field, the tester may follow procedure for Container No. 3 under Section 5.4 (Analysis).

5.2.4 *Container No. 4* (Impingers). Due to the large quantity of liquid involved, the tester may place the impinger solutions in several containers. Clean each of the first three impingers and connecting glassware in the following manner:

1. Wipe the impinger ball joints free of silicone grease and cap the joints.

2. Rotate and agitate each impinger, so that the impinger contents might serve as a rinse solution.

3. Transfer the contents of the impingers to a 500-ml graduated cylinder. Remove the outlet ball joint cap and drain the contents through this opening. Do not separate the impinger parts (inner and outer tubes) while transferring their contents to the cylinder. Measure the liquid volume to within ±2 ml. Alternatively, determine the weight of the liquid to within ±0.5 g. Record in the log the volume or weight of the liquid present, along with a notation of any color or film observed in the impinger catch. The liquid volume or weight is needed, along with the silica gel data, to calculate the stack gas moisture content (see Method 5, Figure 5–3).

4. Transfer the contents to Container No. 4.

5. Note: In steps 5 and 6 below, measure and record the total amount of 0.1 N HNO_3 used for rinsing. Pour approximately 30 ml of 0.1 N HNO_3 into each of the first three impingers and agitate the impingers. Drain the 0.1 N HNO_3 through the outlet arm of each impinger into Container No. 4. Repeat this operation a second time; inspect the impingers for any abnormal conditions.

6. Wipe the ball joints of the glassware connecting the impingers free of silicone grease and rinse each piece of glassware twice with 0.1 N HNO_3; transfer this rinse into Container No. 4. (*Do not rinse or brush the glass-fritted filter support.*) Mark the height of the fluid level to determine whether leakage occurs during transport. Label the container to clearly identify its contents.

5.2.5 Blanks. Save 200 ml of the 0.1 N HNO_3 used for sampling and cleanup as a blank. Take the solution directly from the bottle being used and place into a glass sample container labeled ''0.1 N HNO_3 blank.''

5.3 Sample Preparation.

5.3.1 *Container No. 1* (Filter). Cut the filter into strips and transfer the strips and all loose particulate matter into a 125-ml Erlenmeyer flask. Rinse the petri dish with 10 ml of 50 percent HNO_3 to insure a quantitative transfer and add to the flask. (Note: If the total volume required in Section 5.3.3 is expected to exceed 80 ml, use a 250-ml Erlenmeyer flask in place of the 125-ml flask.)

5.3.2 *Containers No. 2 and No. 4* (Probe and Impingers). (Check the liquid level in Containers No. 2 and/or No. 4 and confirm as to whether or not leakage occurred during transport; note observation on the analysis sheet. If a noticeable amount of leakage had occurred, either void the sample or take steps, subject to the approval of the Administrator, to adjust the final results.) Combine the contents of Containers No. 2 and No. 4 and take to dryness on a hot plate.

5.3.3 Sample Extraction for Lead. Based on the approximate stack gas particulate concentration and the total volume of stack gas sampled, estimate the total weight of particulate sample collected. Then transfer the residue from Containers No. 2 and No. 4 to the 125-ml Erlenmeyer flask that contains the filter using rubber policeman and 10 ml of 50 percent HNO_3 for every 100 mg of sample collected in the train or a minimum of 30 ml of 50 percent HNO_3 whichever is larger.

Place the Erlenmeyer flask on a hot plate and heat with periodic stirring for 30 min at a temperature just below boiling. If the sample volume falls below 15 ml, add more 50 percent HNO_3. Add 10 ml of 3 percent H_2O_2 and continue heating for 10 min. Add 50 ml of hot (80 °C) deionized distilled water and heat for 20 min. Remove the flask from the hot plate and allow to cool. Filter the sample through a Millipore membrane filter or equivalent and transfer the filtrate to a 250-ml volumetric flask. Dilute to volume with deionized distilled water.

5.3.4 Filter Blank. Determine a filter blank using two filters from each lot of filters used in the sampling train. Cut each filter into strips and place each filter in a separate 125-ml Erlenmeyer flask. Add 15 ml of 50 percent HNO_3 and treat as described in Section 5.3.3 using 10 ml of 3 percent H_2O_2 and 50 ml of hot, deionized distilled water. Filter and dilute to a total volume of 100 ml using deionized distilled water.

5.3.5 0.1 N HNO_3 Blank. Take the entire 200 ml of 0.1 N HNO_3 to dryness on a steam bath, add 15 ml of 50 percent HNO_3, and treat as described in Section 5.3.3 using 10 ml of 3 percent H_2O_2 and 50 ml of hot, deionized distilled water. Dilute to a total volume of 100 ml using deionized distilled water.

5.4 Analysis.

5.4.1 Lead Determination. Calibrate the spectrophotometer as described in Section 6.2 and determine the absorbance for each source sample, the filter blank, and 0.1 N HNO_3 blank. Analyze each sample three times in this manner. Make appropriate dilutions, as required, to bring all sample Pb concentrations into the linear absorbance range of the spectrophotometer.

If the Pb concentration of a sample is at the low end of the calibration curve and high accuracy is required, the sample can be taken to dryness on a hot plate and the residue dissolved in the appropriate volume of water to bring it into the optimum range of the calibration curve.

5.4.2 Check for Matrix Effects on the Lead Results. Since the analysis for Pb by atomic absorption is sensitive to the chemical composition and to the physical properties (viscosity, pH) of the sample (matrix effects), the analyst shall check at least one sample from each source using the method of additions as follows:

Add or spike an equal volume of standard solution to an aliquot of the sample solution, then measure the absorbance of the resulting solution and the absorbance of an aliquot of unspiked sample.

Next, calculate the Pb concentration C_s in µg/ml of the sample solution by using the following equation:

$$C_s = C_a \frac{A_s}{A_t - A_s} \qquad \text{Eq. 12-1}$$

Where:

C_a=Pb concentration of the standard solution, µg/ml.

A_s=Absorbance of the sample solution.

A_t=Absorbance of the spiked sample solution.

Volume corrections will not be required if the solutions as analyzed have been made to the same final volume. Therefore, C_s and C_a represent Pb concentration before dilutions.

Method of additions procedures described on pages 9–4 and 9–5 of the section entitled ''General Information'' of the Perkin Elmer Corporation Atomic Absorption Spectrophotometry Manual, Number 303–0152 (see Citation 1 of Bibliography) may also be used. In any event, if the results of the method of additions procedure used on the single source sample do not agree to within 5 percent of the value obtained by the routine atomic absorption analysis, then reanalyze all samples from the source using a method of additions procedure.

5.4.3 *Container No. 3* (Silica Gel). The tester may conduct this step in the field. Weigh the spent silica gel (or silica gel plus impinger) to the nearest 0.5 g; record this weight.

6. *Calibration*

Maintain a laboratory log of all calibrations.

6.1 Sampling Train Calibration. Calibrate the sampling train components according to the indicated sections of Method 5: Probe Nozzle (Section 5.1); Pitot Tube (Section 5.2); Metering System (Section 5.3); Probe Heater (Section 5.4); Temperature Gauges (Section 5.5); Leak-Check of the Metering System (Section 5.6); and Barometer (Section 5.7).

6.2 Spectrophotometer. Measure the absorbance of the standard solutions using the instrument settings recommended by the spectrophotometer manufacturer. Repeat until good agreement (±3 percent) is obtained between two consecutive readings. Plot the absorbance (y-axis) versus concentration in µg Pb/ml (x-axis). Draw or compute a straight line through the linear portion of the curve. Do not force the calibration curve through zero, but if the curve does not pass through the origin or at least lie closer to the origin than ±0.003 absorbance units, check for incorrectly prepared standards and for curvature in the calibration curve.

To determine stability of the calibration curve, run a blank and a standard after every five samples and recalibrate, as necessary.

7. *Calculations*

7.1 Dry Gas Volume. Using the data from this test, calculate $V_{m(std)}$, the total volume of dry gas metered corrected to standard conditions (20 °C and 760 mm Hg), by using Equation 5–1 of Method 5. If necessary, adjust $V_{w(std)}$ for leakages as outlined in Section 6.3 of Method 5. See the field data sheet for the average dry gas meter temperature and average orifice pressure drop.

7.2 Volume of Water Vapor and Moisture Content. Using data obtained in this test and Equations 5–2 and 5–3 of Method 5, calculate the volume of water vapor $V_{w(std)}$ and the moisture content B_{ws} of the stack gas.

7.3 Total Lead in Source Sample. For each source sample correct the average absorbance for the contribution of the filter blank and the 0.1 N HNO_3 blank. Use the calibration curve and this corrected absorbance to determine the µg Pb concentration in the sample aspirated into the spectrophotometer. Calculate the total Pb content $C°_{Pb}$ (in µg) in the original source sample; correct for all the dilutions that were made to bring the Pb concentration of the sample into the linear range of the spectrophotometer.

7.4 Lead Concentration. Calculate the stack gas Pb concentration C_{Pb} in mg/dscm as follows:

$$C_{Pb} = K \frac{C°_{Pb}}{V_{m(std)}} \qquad \text{Eq. 12-2}$$

Where:

K=0.001 mg/µg for metric units.

=2.205 lb/µg×10^{-9} for English units.

7.5 Isokinetic Variation and Acceptable Results. Same as Method 5, Sections 6.11 and 6.12, respectively. To calculate v_s, the average stack gas velocity, use Equation 2–9 of Method 2 and the data from this field test.

8. *Alternative Test Methods for Inorganic Lead*

8.1 Simultaneous Determination of Particulate and Lead Emissions. The tester may use Method 5 to simultaneously determine Pb provided that (1) he uses acetone to remove particulate from the probe and inside of the filter holder as specified by Method 5, (2) he uses 0.1 N HNO_3 in the impingers, (3) he uses a glass fiber filter with a low Pb background, and (4) he treats and analyzes the entire train contents, including the impingers, for Pb as described in Section 5 of this method.

8.2 Filter Location. The tester may use a filter between the third and fourth impinger provided that he includes the filter in the analysis for Pb.

8.3 In-stack Filter. The tester may use an in-stack filter provided that (1) he uses a glass-lined probe and at least two impingers, each containing 100 ml of 0.1 N HNO_3, after the in-stack filter and (2) he recovers and analyzes the probe and impinger contents for

Pb. Recover sample from the nozzle with acetone if a particulate analysis is to be made.

9. *Bibliography*

1. Perkin Elmer Corporation. Analytical Methods for Atomic Absorption Spectrophotometry. Norwalk, CT. September 1976.

2. American Society for Testing and Materials. Annual Book of ASTM Standards. Part 31; Water, Atmospheric Analysis. Philadelphia, PA. 1974. p. 40–42.

3. Klein, R. and C. Hach. Standard Additions—Uses and Limitations in Spectrophotometric Analysis. *Amer. Lab. 9:*21–27. 1977.

4. Mitchell, W.J. and M.R. Midgett. Determining Inorganic and Alkyl Lead Emissions from Stationary Sources. U.S. Environmental Protection Agency, Emission Monitoring and Support Laboratory. Research Triangle Park, NC. (Presented at National APCA Meeting. Houston. June 26, 1978).

5. Same as Method 5, Citations 2 to 5 and 7 of bibliography.

METHOD 13A—DETERMINATION OF TOTAL FLUORIDE EMISSIONS FROM STATIONARY SOURCES; SPADNS ZIRCONIUM LAKE METHOD

1. *Principle and Applicability*

1.1 Applicability. This method applies to the determination of fluoride (F) emissions from sources as specified in the regulations. It does not measure fluorocarbons, such as freons.

1.2 Principle. Gaseous and particulate F are withdrawn isokinetically from the source and collected in water and on a filter. The total F is then determined by the SPADNS Zirconium Lake Colorimetric Method.

2. *Range and Sensitivity*

The range of this method is 0 to 1.4 μg F/ml. Sensitivity has not been determined.

3. *Interferences*

Large quantities of chloride will interfere with the analysis, but this interference can be prevented by adding silver sulfate into the distillation flask (see Section 7.3.4). If chloride ion is present, it may be easier to use the Specific Ion Electrode Method (Method 13B). Grease on sample-exposed surfaces may cause low F results due to adsorption.

4. *Precision, Accuracy, and Stability*

4.1 Precision. The following estimates are based on a collaborative test done at a primary aluminum smelter. In the test, six laboratories each sampled the stack simultaneously using two sampling trains for a total of 12 samples per sampling run. Fluoride concentrations encountered during the test ranged from 0.1 to 1.4 mg F/m^3. The within-laboratory and between-laboratory standard deviations, which include sampling and analysis errors, were 0.044 mg F/m^{3}with 60 degrees of freedom and 0.064 mg F/m^{3}with five degrees of freedom, respectively.

4.2 Accuracy. The collaborative test did not find any bias in the analytical method.

4.3 Stability. After the sample and colorimetric reagent are mixed, the color formed is stable for approximately 2 hours. A 3 °C temperature difference between the sample and standard solutions produces an error of approximately 0.005 mg F/liter. To avoid this error, the absorbances of the sample and standard solutions must be measured at the same temperature.

5. *Apparatus*

5.1 Sampling Train. A schematic of the sampling train is shown in Figure 13A–1; it is similar to the Method 5 train except the filter position is interchangeable. The sampling train consists of the following components:

5.1.1 Probe Nozzle, Pitot Tube, Differential Pressure Gauge, Filter Heating System, Metering System, Barometer, and Gas Density Determination Equipment. Same as Method 5, Sections 2.1.1, 2.1.3, 2.1.4, 2.1.6, 2.1.8, 2.1.9, and 2.1.10. When moisture condensation is a problem, the filter heating system is used.

5.1.2 Probe Liner. Borosilicate glass or 316 stainless steel. When the filter is located immediately after the probe, the tester may use a probe heating system to prevent filter plugging resulting from moisture condensation, but the tester shall not allow the temperature in the probe to exceed 120±14 °C (248±25 °F).

5.1.3 Filter Holder. With positive seal against leakage from the outside or around the filter. If the filter is located between the probe and first impinger, use borosilicate glass or stainless steel with a 20-mesh stainless steel screen filter support and a silicone rubber gasket; do not use a glass frit or a sintered metal filter support. If the filter is located between the third and fourth impingers, the tester may use borosilicate glass with a glass frit filter support and a silicone rubber gasket. The tester may also use other materials of construction with approval from the Administrator.

5.1.4 Impingers. Four impingers connected as shown in Figure 13A–1 with ground-glass (or equivalent), vacuum-tight fittings. For the first, third, and fourth impingers, use the Greenburg-Smith design, modified by replacing the tip with a 1.3-cm-inside-diameter (½ in.) glass tube extending to 1.3 cm (½ in.) from the bottom of the flask. For the second impinger, use a Greenburg-Smith impinger with the standard tip. The tester may use modifications (e.g., flexible connections between the impingers or materials other than glass), subject to the approval of the Administrator. Place a thermometer, capable of measuring

temperature to within 1 °C (2 °F), at the outlet of the fourth impinger for monitoring purposes.

5.2 Sample Recovery. The following items are needed:

5.2.1 Probe-Liner and Probe-Nozzle Brushes, Wash Bottles, Graduated Cylinder and/or Balance, Plastic Storage Containers, Rubber Policeman, Funnel. Same as Method 5, Sections 2.2.1 to 2.2.2 and 2.2.5 to 2.2.8, respectively.

5.2.2 Sample Storage Container. Wide-mouth, high-density-polyethylene bottles for impinger water samples, 1-liter.

5.3 Analysis. The following equipment is needed:

5.3.1 Distillation Apparatus. Glass distillation apparatus assembled as shown in Figure 13A–2.

5.3.2 Bunsen Burner.

5.3.3 Electric Muffle Furnace. Capable of heating to 600 °C.

5.3.4 Crucibles. Nickel, 75- to 100-ml.

5.3.5 Beakers. 500-ml and 1500-ml.

5.3.6 Volumetric Flasks. 50-ml.

5.3.7 Erlenmeyer Flasks or Plastic Bottles. 500-ml.

5.3.8 Constant Temperature Bath. Capable of maintaining a constant temperature of ±1.0 °C at room temperature conditions.

5.3.9 Balance. 300-g capacity to measure to ±0.5 g.

5.3.10 Spectrophotometer. Instrument that measures absorbance at 570 nm and provides at least a 1-cm light path.

5.3.11 Spectrophotometer Cells. 1-cm pathlength.

6. *Reagents*

6.1 Sampling. Use ACS reagent-grade chemicals or equivalent, unless otherwise specified. The reagents used in sampling are as follows:

6.1.1 Filters.

6.1.1.1 If the filter is located between the third and fourth impingers, use a Whatman[1] No. 1 filter, or equivalent, sized to fit the filter holder.

[1] Mention of company or product names does not constitute endorsement by the U.S. Environmental Protection Agency.

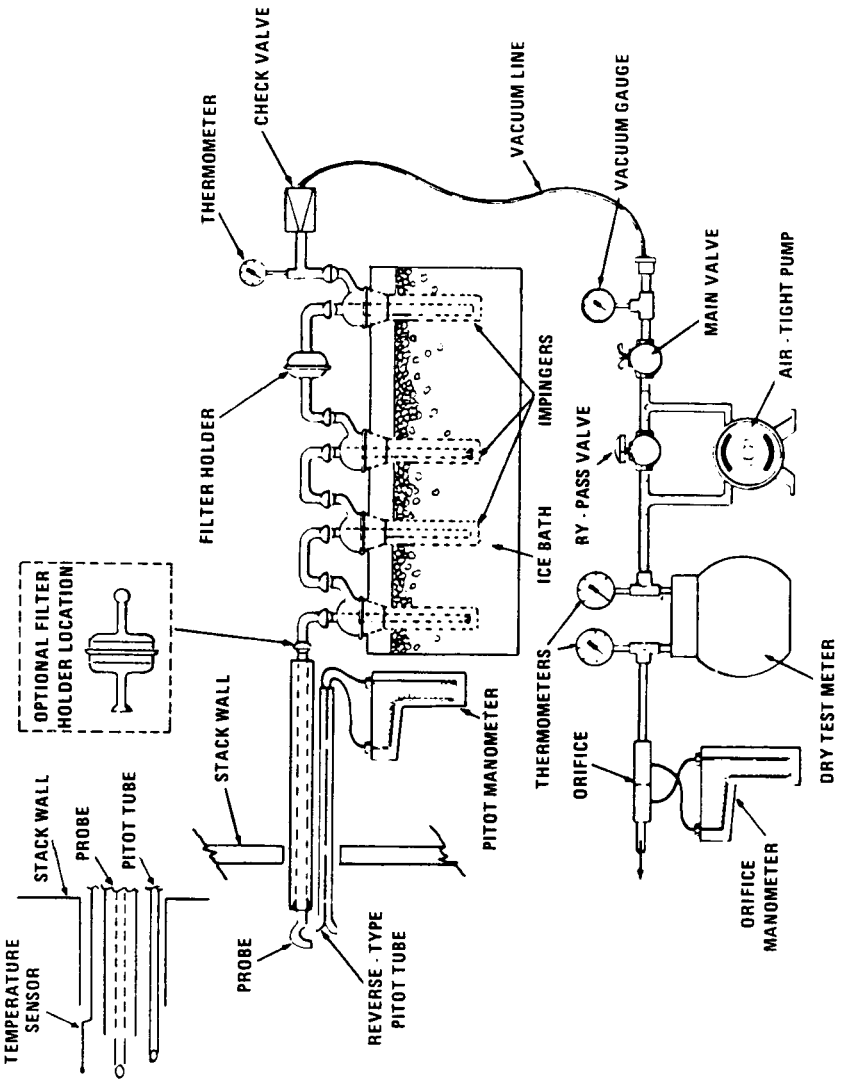

Figure 13A-1. Fluoride sampling train.

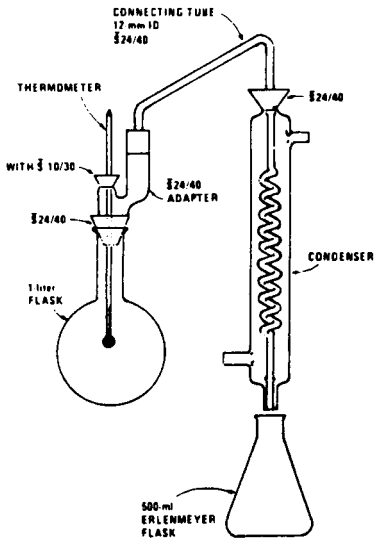

Figure 13A-2. Fluoride distillation apparatus.

6.1.1.2 If the filter is located between the probe and first impinger, use any suitable medium (e.g., paper, organic membrane) that conforms to the following specifications: (1) The filter can withstand prolonged exposure to temperatures up to 135 °C (275 °F). (2) The filter has at least 95 percent collection efficiency (≤5 percent penetration) for 0.3 μm dioctyl phthalate smoke particles. Conduct the filter efficiency test before the test series, using ASTM Standard Method D 2986–71, or use test data from the supplier's quality control program. (3) The filter has a low F blank value (≤0.015 mg F/$cm^2$of filter area). Before the test series, determine the average F blank value of at least three filters (from the lot to be used for sampling) using the applicable procedures described in Sections 7.3 and 7.4 of this method. In general, glass fiber filters have high and/or variable F blank values, and will not be acceptable for use.

6.1.2 Water. Deionized distilled, to conform to ASTM Specification D 1193–74, Type 3. If high concentrations of organic matter are not expected to be present, the analyst may delete the potassium permanganate test for oxidizable organic matter.

6.1.3 Silica Gel, Crushed Ice, and Stopcock Grease. Same as Method 5, Sections 3.1.2, 3.1.4, and 3.1.5, respectively.

6.2 Sample Recovery. Water, from same container as described in Section 6.1.2, is needed for sample recovery.

6.3 Sample Preparation and Analysis. The reagents needed for sample preparation and analysis are as follows:

6.3.1 Calcium Oxide (CaO). Certified grade containing 0.005 percent F or less.

6.3.2 Phenolphthalein Indicator. Dissolve 0.1 g of phenolphthalein in a mixture of 50 ml of 90 percent ethanol and 50 ml of deionized distilled water.

6.3.3 Silver Sulfate ($Ag_2 SO_4$).

6.3.4 Sodium Hydroxide (NaOH). Pellets.

6.3.5 Sulfuric Acid (H_2SO_4), Concentrated.

6.3.6 Sulfuric Acid, 25 percent (V/V). Mix 1 part of concentrated H_2SO_4 with 3 parts of deionized distilled water.

6.3.7 Filters. Whatman No. 541, or equivalent.

6.3.8 Hydrochloric Acid (HCl), Concentrated.

6.3.9 Water. From same container as described in Section 6.1.2.

6.3.10 Fluoride Standard Solution, 0.01 mg F/ml. Dry in an oven at 110 °C for at least 2 hours. Dissolve 0.2210 g of NaF in 1 liter of deionized distilled water. Dilute 100 ml of this solution to 1 liter with deionized distilled water.

6.3.11 SPADNS Solution [4, 5 dihydroxy-3-(p-sulfophenylazo)-2,7-naphthalene-disulfonic acid trisodium salt]. Dissolve 0.960±0.010 g of SPADNS reagent in 500 ml deionized distilled water. If stored in a well-sealed bottle protected from the sunlight, this solution is stable for at least 1 month.

6.3.12 Spectrophotometer Zero Reference Solution. Prepare daily. Add 10 ml of SPADNS solution (6.3.11) to 100 ml deionized distilled water, and acidify with a solution prepared by diluting 7 ml of concentrated HCl to 10 ml with deionized distilled water.

6.3.13 SPADNS Mixed Reagent. Dissolve 0.135±0.005 g of zirconyl chloride octahydrate ($ZrOCl_2.8H_2O$) in 25 ml of deionized distilled water. Add 350 ml of concentrated HCl, and dilute to 500 ml with deionized distilled water. Mix equal volumes of this solution and SPADNS solution to form a single reagent. This reagent is stable for at least 2 months.

7. *Procedure*

7.1 Sampling. Because of the complexity of this method, testers should be trained and experienced with the test procedures to assure reliable results.

7.1.1 Pretest Preparation. Follow the general procedure given in Method 5, Section 4.1.1, except the filter need not be weighed.

7.1.2 Preliminary Determinations. Follow the general procedure given in Method 5, Section 4.1.2., except the nozzle size selected must maintain isokinetic sampling rates below 28 liters/min (1.0 cfm).

7.1.3 Preparation of Collection Train. Follow the general procedure given in Method 5, Section 4.1.3, except for the following variations:

Place 100 ml of deionized distilled water in each of the first two impingers, and leave the

third impinger empty. Transfer approximately 200 to 300 g of preweighed silica gel from its container to the fourth impinger.

Assemble the train as shown in Figure 13A–1 with the filter between the third and fourth impingers. Alternatively, if a 20-mesh stainless steel screen is used for the filter support, the tester may place the filter between the probe and first impinger. The tester may also use a filter heating system to prevent moisture condensation, but shall not allow the temperature around the filter holder to exceed 120±14 °C (248±25 °F). Record the filter location on the data sheet.

7.1.4 Leak-Check Procedures. Follow the leak-check procedures given in Method 5, Sections 4.1.4.1 (Pretest Leak-Check), 4.1.4.2 (Leak-Checks During the Sample Run), and 4.1.4.3 (Post-Test Leak-Check).

7.1.5 Fluoride Train Operation. Follow the general procedure given in Method 5, Section 4.1.5, keeping the filter and probe temperatures (if applicable) at 120±14 °C (248±25 °F) and isokinetic sampling rates below 28 liters/min (1.0 cfm). For each run, record the data required on a data sheet such as the one shown in Method 5, Figure 5–2.

7.2 Sample Recovery. Begin proper cleanup procedure as soon as the probe is removed from the stack at the end of the sampling period.

Allow the probe to cool. When it can be safely handled, wipe off all external particulate matter near the tip of the probe nozzle and place a cap over it to keep from losing part of the sample. Do not cap off the probe tip tightly while the sampling train is cooling down, because a vacuum would form in the filter holder, thus drawing impinger water backwards.

Before moving the sample train to the cleanup site, remove the probe from the sample train, wipe off the silicone grease, and cap the open outlet of the probe. Be careful not to lose any condensate, if present. Remove the filter assembly, wipe off the silicone grease from the filter holder inlet, and cap this inlet. Remove the umbilical cord from the last impinger, and cap the impinger. After wiping off the silicone grease, cap off the filter holder outlet and any open impinger inlets and outlets. The tester may use ground-glass stoppers, plastic caps, or serum caps to close these openings.

Transfer the probe and filter-impinger assembly to an area that is clean and protected from the wind so that the chances of contaminating or losing the sample is minimized.

Inspect the train before and during disassembly, and note any abnormal conditions. Treat the samples as follows:

7.2.1 *Container No. 1* (Probe, Filter, and Impinger Catches). Using a graduated cylinder, measure to the nearest ml, and record the volume of the water in the first three impingers; include any condensate in the probe in this determination. Transfer the impinger water from the graduated cylinder into this polyethylene container. Add the filter to this container. (The filter may be handled separately using procedures subject to the Administrator's approval.) Taking care that dust on the outside of the probe or other exterior surfaces does not get into the sample, clean all sample-exposed surfaces (including the probe nozzle, probe fitting, probe liner, first three impingers, impinger connectors, and filter holder) with deionized distilled water. Use less than 500 ml for the entire wash. Add the washings to the sampler container. Perform the deionized distilled water rinses as follows:

Carefully remove the probe nozzle and rinse the inside surface with deionized distilled water from a wash bottle. Brush with a Nylon bristle brush, and rinse until the rinse shows no visible particles, after which make a final rinse of the inside surface. Brush and rinse the inside parts of the Swagelok fitting with deionized distilled water in a similar way.

Rinse the probe liner with deionized distilled water. While squirting the water into the upper end of the probe, tilt and rotate the probe so that all inside surfaces will be wetted with water. Let the water drain from the lower end into the sample container. The tester may use a funnel (glass or polyethylene) to aid in transferring the liquid washes to the container. Follow the rinse with a probe brush. Hold the probe in an inclined position, and squirt deionized distilled water into the upper end as the probe brush is being pushed with a twisting action through the probe. Hold the sample container underneath the lower end of the probe, and catch any water and particulate matter that is brushed from the probe. Run the brush through the probe three times or more. With stainless steel or other metal probes, run the brush through in the above prescribed manner at least six times since metal probes have small crevices in which particulate matter can be entrapped. Rinse the brush with deionized distilled water, and quantitatively collect these washings in the sample container. After the brushing, make a final rinse of the probe as described above.

It is recommended that two people clean the probe to minimize sample losses. Between sampling runs, keep brushes clean and protected from contamination.

Rinse the inside surface of each of the first three impingers (and connecting glassware) three separate times. Use a small portion of deionized distilled water for each rinse, and brush each sample-exposed surface with a Nylon bristle brush, to ensure recovery of fine particulate matter. Make a final rinse of each surface and of the brush.

After ensuring that all joints have been wiped clean of the silicone grease, brush and

rinse with deionized distilled water the inside of the filter holder (front-half only, if filter is positioned between the third and fourth impingers). Brush and rinse each surface three times or more if needed. Make a final rinse of the brush and filter holder.

After all water washings and particulate matter have been collected in the sample container, tighten the lid so that water will not leak out when it is shipped to the laboratory. Mark the height of the fluid level to determine whether leakage occurs during transport. Label the container clearly to identify its contents.

7.2.2 *Container No. 2* (Sample Blank). Prepare a blank by placing an unused filter in a polyethylene container and adding a volume of water equal to the total volume in Container No. 1. Process the blank in the same manner as for Container No. 1.

7.2.3 *Container No. 3* (Silica Gel). Note the color of the indicating silica gel to determine whether it has been completely spent and make a notation of its condition. Transfer the silica gel from the fourth impinger to its original container and seal. The tester may use a funnel to pour the silica gel and a rubber policeman to remove the silica gel from the impinger. It is not necessary to remove the small amount of dust particles that may adhere to the impinger wall and are difficult to remove. Since the gain in weight is to be used for moisture calculations, do not use any water or other liquids to transfer the silica gel. If a balance is available in the field, the tester may follow the analytical procedure for Container No. 3 in Section 7.4.2.

7.3 Sample Preparation and Distillation. (Note the liquid levels in Containers No. 1 and No. 2 and confirm on the analysis sheet whether or not leakage occurred during transport. If noticeable leakage had occurred, either void the sample or use methods, subject to the approval of the Administrator, to correct the final results.) Treat the contents of each sample container as described below:

7.3.1 *Container No. 1* (Probe, Filter, and Impinger Catches). Filter this container's contents, including the sampling filter, through Whatman No. 541 filter paper, or equivalent, into a 1500-ml beaker.

7.3.1.1 If the filtrate volume exceeds 900 ml, make the filtrate basic (red to phenolphthalein) with NaOH, and evaporate to less than 900 ml.

7.3.1.2 Place the filtered material (including sampling filter) in a nickel crucible, add a few ml of deionized distilled water, and macerate the filters with a glass rod.

Add 100 mg CaO to the crucible, and mix the contents thoroughly to form a slurry. Add two drops of phenolphthalein indicator. Place the crucible in a hood under infrared lamps or on a hot plate at low heat. Evaporate the water completely. During the evaporation of the water, keep the slurry basic (red to phenolphthalein) to avoid loss of F. If the indicator turns colorless (acidic) during the evaporation, add CaO until the color turns red again.

After evaporation of the water, place the crucible on a hot plate under a hood and slowly increase the temperature until the Whatman No. 541 and sampling filters char. It may take several hours to completely char the filters.

Place the crucible in a cold muffle furnace. Gradually (to prevent smoking) increase the temperature to 600 °C, and maintain until the contents are reduced to an ash. Remove the crucible from the furnace and allow to cool.

Add approximately 4 g of crushed NaOH to the crucible and mix. Return the crucible to the muffle furnace, and fuse the sample for 10 minutes at 600 °C.

Remove the sample from the furnace, and cool to ambient temperature. Using several rinsings of warm deionized distilled water, transfer the contents of the crucible to the beaker containing the filtrate. To assure complete sample removal, rinse finally with two 20-ml portions of 25 percent H_2SO_4, and carefully add to the beaker. Mix well, and transfer to a 1-liter volumetric flask. Dilute to volume with deionized distilled water, and mix thoroughly. Allow any undissolved solids to settle.

7.3.2 *Container No. 2* (Sample Blank). Treat in the same manner as described in Section 7.3.1 above.

7.3.3 Adjustment of Acid/Water Ratio in Distillation Flask. (Use a protective shield when carrying out this procedure.) Place 400 ml of deionized distilled water in the distillation flask, and add 200 ml of concentrated H_2SO_4. (Caution: Observe standard precautions when mixing H_2SO_4 with water. Slowly add the acid to the flask with constant swirling.) Add some soft glass beads and several small pieces of broken glass tubing, and assemble the apparatus as shown in Figure 13A–2. Heat the flask until it reaches a temperature of 175 °C to adjust the acid/water ratio for subsequent distillations. Discard the distillate.

7.3.4 Distillation. Cool the contents of the distillation flask to below 80 °C. Pipet an aliquot of sample containing less than 10.0 mg F directly into the distillation flask, and add deionized distilled water to make a total volume of 220 ml added to the distillation flask. (To estimate the appropriate aliquot size, select an aliquot of the solution and treat as described in Section 7.4.1. This will be an approximation of the F content because of possible interfering ions.)

NOTE: If the sample contains chloride, add 5 mg of $Ag_2 SO_4$ to the flask for every mg of chloride.

Place a 250-ml volumetric flask at the condenser exit. Heat the flask as rapidly as possible with a Bunsen burner, and collect all the distillate up to 175 °C. During heatup, play the burner flame up and down the side of the flask to prevent bumping. Conduct the distillation as rapidly as possible (15 minutes or less). Slow distillations have been found to produce low F recoveries. Caution: Be careful not to exceed 175 °C to avoid causing H_2SO_4 to distill over.

If F distillation in the mg range is to be followed by a distillation in the fractional mg range, add 220 ml of deionized distilled water and distill it over as in the acid adjustment step to remove residual F from the distillation system.

The tester may use the acid in the distillation flask until there is carry-over of interferences or poor F recovery. Check for these every tenth distillation using a deionized distilled water blank and a standard solution. Change the acid whenever the F recovery is less than 90 percent or the blank value exceeds 0.1 µg/ml.

7.4 Analysis.

7.4.1 Containers No. 1 and No. 2. After distilling suitable aliquots from Containers No. 1 and No. 2 according to Section 7.3.4, dilute the distillate in the volumetric flasks to exactly 250 ml with deionized distilled water, and mix thoroughly. Pipet a suitable aliquot of each sample distillate (containing 10 to 40 µg F/ml) into a beaker, and dilute to 50 ml with deionized distilled water. Use the same aliquot size for the blank. Add 10 ml of SPADNS mixed reagent (6.3.13), and mix thoroughly.

After mixing, place the sample in a constant-temperature bath containing the standard solutions (see Section 8.2) for 30 minutes before reading the absorbance on the spectrophotometer.

Set the spectrophotometer to zero absorbance at 570 nm with the reference solution (6.3.12), and check the spectrophotometer calibration with the standard solution. Determine the absorbance of the samples, and determine the concentration from the calibration curve. If the concentration does not fall within the range of the calibration curve, repeat the procedure using a different size aliquot.

7.4.2 *Container No. 3* (Silica Gel). Weigh the spent silica gel (or silica gel plus impinger) to the nearest 0.5 g using a balance. The tester may conduct this step in the field.

8. *Calibration*

Maintain a laboratory log of all calibrations.

8.1 Sampling Train. Calibrate the sampling train components according to the indicated sections in Method 5: Probe Nozzle (Section 5.1); Pitot Tube (Section 5.2); Metering System (Section 5.3); Probe Heater (Section 5.4); Temperature Gauges (Section 5.5); Leak Check of Metering System (Section 5.6); and Barometer (Section 5.7).

8.2 Spectrophotometer. Prepare the blank standard by adding 10 ml of SPADNS mixed reagent to 50 ml of deionized distilled water. Accurately prepare a series of standards from the 0.01 mg F/ml standard fluoride solution (6.3.10) by diluting 0, 2, 4, 6, 8, 10, 12, and 14 ml to 100 ml with deionized distilled water. Pipet 50 ml from each solution and transfer each to a separate 100-ml beaker. Then add 10 ml of SPADNS mixed reagent to each. These standards will contain 0, 10, 20, 30, 40 50, 60, and 70 µg F (0 to 1.4 µg/ml), respectively.

After mixing, place the reference standards and reference solution in a constant temperature bath for 30 minutes before reading the absorbance with the spectrophotometer. Adjust all samples to this same temperature before analyzing.

With the spectrophotometer at 570 nm, use the reference solution (6.3.12) to set the absorbance to zero.

Determine the absorbance of the standards. Prepare a calibration curve by plotting µg F/50 ml versus absorbance on linear graph paper. Prepare the standard curve initially and thereafter whenever the SPADNS mixed reagent is newly made. Also, run a calibration standard with each set of samples and if it differs from the calibration curve by ±2 percent, prepare a new standard curve.

9. *Calculations*

Carry out calculations, retaining at least one extra decimal figure beyond that of the acquired data. Round off figures after final calculation. Other forms of the equations may be used, provided that they yield equivalent results.

9.1 Nomenclature

A_d = Aliquot of distillate taken for color development, ml.

A_t = Aliquot of total sample added to still, ml.

B_{ws} = Water vapor in the gas stream, proportion by volume.

C_s = Concentration of F in stack gas, mg/m³ (mg/ft³), dry basis, corrected to standard conditions of 760 mm Hg (29.92 in. Hg) and 293°K (528°R).

F_t = Total F in sample, mg.

µg F = Concentration from the calibration curve, µg.

T_m = Absolute average dry gas meter temperature (see Figure 5–2 of Method 5), °K (°R).

T_s = Absolute average stack gas temperature (see Figure 5–2 of Method 5), °K (°R).

V_d = Volume of distillate as diluted, ml.

$V_{m(std)}$ = Volume of gas sample as measured by dry gas meter, corrected to standard conditions, dscm (dscf).

V_t = Total volume of F sample, after final dilution, ml.

$V_{w(std)}$ = Volume of water vapor in the gas sample, corrected to standard conditions, scm (scf).

9.2 Average Dry Gas Meter Temperature and Average Orifice Pressure Drop. See data sheet (Figure 5–2 of Method 5).

9.3 Dry Gas Volume. Calculate $V_{m(std)}$ and adjust for leakage, if necessary, using the equation in Section 6.3 of Method 5.

9.4 Volume of Water Vapor and Moisture Content. Calculate the volume of water vapor $V_{w(std)}$ and moisture content B_{ws} from the data obtained in this method (Figure 13A–1); use Equations 5–2 and 5–3 of Method 5.

9.5 Concentration.

9.5.1 Total Fluoride in Sample. Calculate the amount of F in the sample using the following equation:

$$F_t = 10^{-3} \frac{V_t}{A_t} \frac{V_d}{A_d} (\mu g\, F) \qquad \text{Eq. 13A-1}$$

9.5.2 Fluoride Concentration in Stack Gas. Determine the F concentration in the stack gas using the following equation:

$$C_s = \frac{F_t}{V_{m(std)}} \qquad \text{Eq. 13A-2}$$

9.6 Isokinetic Variation and Acceptable Results. Use Method 5, Sections 6.11 and 6.12.

10. *Bibliography*

1. Bellack, Ervin, Simplified Fluoride Distillation Method. Journal of the American Water Works Association. *50:*5306. 1958.

2. Mitchell, W. J., J. C. Suggs, and F. J. Bergman. Collaborative Study of EPA Method 13A and Method 13B. Publication No. EPA–600/4–77–050. Environmental Protection Agency. Research Triangle Park, NC. December 1977.

3. Mitchell, W. J. and M. R. Midgett. Adequacy of Sampling Trains and Analytical Procedures Used for Fluoride. Atm. Environ. *10:*865–872. 1976.

METHOD 13B—DETERMINATION OF TOTAL FLUORIDE EMISSIONS FROM STATIONARY SOURCES—SPECIFIC ION ELECTRODE METHOD

1. *Principle and Applicability*

1.1 Applicability. This method applies to the determination of fluoride (F) emissions from stationary sources as specified in the regulations. It does not measure fluorocarbons, such as freons.

1.2 Principle. Gaseous and particulate F are withdrawn isokinetically from the source and collected in water and on a filter. The total F is then determined by the specific ion electrode method.

2. *Range and Sensitivity*

The range of this method is 0.02 to 2,000 µg F/ml; however, measurements of less than 0.1 µg F/ml require extra care. Sensitivity has not been determined.

3. *Interferences*

Grease on sample-exposed surfaces may cause low F results because of adsorption.

4. *Precision and Accuracy*

4.1 Precision. The following estimates are based on a collaborative test done at a primary aluminum smelter. In the test, six laboratories each sampled the stack simultaneously using two sampling trains for a total of 12 samples per sampling run. Fluoride concentrations encountered during the test ranged from 0.1 to 1.4 mg F/m³. The within-laboratory and between-laboratory standard deviations, which include sampling and analysis errors, are 0.037 mg F/m³with 60 degrees of freedom and 0.056 mg F/m³with five degrees of freedom, respectively.

4.2 Accuracy. The collaborative test did not find any bias in the analytical method.

5. *Apparatus*

5.1 Sampling Train and Sample Recovery. Same as Method 13A, Sections 5.1 and 5.2, respectively.

5.2 Analysis. The following items are needed:

5.2.1 Distillation Apparatus, Bunsen Burner, Electric Muffle Furnace, Crucibles, Beakers, Volumetric Flasks, Erlenmeyer Flasks or Plastic Bottles, Constant Temperature Bath, and Balance. Same as Method 13A, Sections 5.3.1 to 5.3.9, respectively, except include also 100-ml polyethylene beakers.

5.2.2 Fluoride Ion Activity Sensing Electrode.

5.2.3 Reference Electrode. Single junction, sleeve type.

5.2.4 Electrometer. A pH meter with millivolt-scale capable of ±0.1-mv resolution, or a specific ion meter made specifically for specific ion use.

5.2.5 Magnetic Stirrer and TFE[2] Fluorocarbon-Coated Stirring Bars.

6. *Reagents*

6.1 Sampling and Sample Recovery. Same as Method 13A, Sections 6.1 and 6.2, respectively.

6.2 Analysis. Use ACS reagent grade chemicals (or equivalent), unless otherwise specified. The reagents needed for analysis are as follows:

6.2.1 Calcium Oxide (CaO). Certified grade containing 0.005 percent F or less.

6.2.2 Phenolphthalein Indicator. Dissolve 0.1 g of phenolphthalein in a mixture of 50 ml of 90 percent ethanol and 50 ml deionized distilled water.

6.2.3 Sodium Hydroxide (NaOH). Pellets.

[2] Mention of any trade name or specific product does not constitute endorsement by the U.S. Environmental Protection Agency.

6.2.4 Sulfuric Acid (H_2SO_4), Concentrated.

6.2.5 Filters. Whatman No. 541, or equivalent.

6.2.6 Water. From same container as 6.1.2 of Method 13A.

6.2.7 Sodium Hydroxide, 5 M. Dissolve 20 g of NaOH in 100 ml of deionized distilled water.

6.2.8 Sulfuric Acid, 25 percent (V/V). Mix 1 part of concentrated H_2SO_4 with 3 parts of deionized distilled water.

6.2.9 Total Ionic Strength Adjustment Buffer (TISAB). Place approximately 500 ml of deionized distilled water in a 1-liter beaker. Add 57 ml of glacial acetic acid, 58 g of sodium chloride, and 4 g of cyclohexylene dinitrilo tetraacetic acid. Stir to dissolve. Place the beaker in a water bath to cool it. Slowly add 5 M NaOH to the solution, measuring the pH continuously with a calibrated pH/reference electrode pair, until the pH is 5.3. Cool to room temperature. Pour into a 1-liter volumetric flask, and dilute to volume with deionized distilled water. Commercially prepared TISAB may be substituted for the above.

6.2.10 Fluoride Standard Solution, 0.1 M. Oven dry some sodium fluoride (NaF) for a minimum of 2 hours at 110 °C, and store in a desiccator. Then add 4.2 g of NaF to a 1-liter volumetric flask, and add enough deionized distilled water to dissolve. Dilute to volume with deionized distilled water.

7. *Procedure*

7.1 Sampling, Sample Recovery, and Sample Preparation and Distillation. Same as Method 13A, Sections 7.1, 7.2, and 7.3, respectively, except the notes concerning chloride and sulfate interferences are not applicable.

7.2 Analysis.

7.2.1 Containers No. 1 and No. 2. Distill suitable aliquots from Containers No. 1 and No. 2. Dilute the distillate in the volumetric flasks to exactly 250 ml with deionized distilled water and mix thoroughly. Pipet a 25-ml aliquot from each of the distillate and separate beakers. Add an equal volume of TISAB, and mix. The sample should be at the same temperature as the calibration standards when measurements are made. If ambient laboratory temperature fluctuates more than ±2 °C from the temperature at which the calibration standards were measured, condition samples and standards in a constant-temperature bath before measurement. Stir the sample with a magnetic stirrer during measurement to minimize electrode response time. If the stirrer generates enough heat to change solution temperature, place a piece of temperature insulating material such as cork, between the stirrer and the beaker. Hold dilute samples (below 10^{-4}M fluoride ion content) in polyethylene beakers during measurement.

Insert the fluoride and reference electrodes into the solution. When a steady millivolt reading is obtained, record it. This may take several minutes. Determine concentration from the calibration curve. Between electrode measurements, rinse the electrode with deionized distilled water.

7.2.2 Container No. 3 (Silica Gel). Same as Method 13A, Section 7.4.2.

8. *Calibration*

Maintain a laboratory log of all calibrations.

8.1 Sampling Train. Same as Method 13A.

8.2 Fluoride Electrode. Prepare fluoride standardizing solutions by serial dilution of the 0.1 M fluoride standard solution. Pipet 10 ml of 0.1 M fluoride standard solution into a 100-ml volumetric flask, and make up to the mark with deionized distilled water for a 10^{-2}M standard solution. Use 10 ml of 10^{-2}M solution to make a 10^{-3}M solution in the same manner. Repeat the dilution procedure and make $10^{-4}$and 10^{-5}solutions.

Pipet 50 ml of each standard into a separate beaker. Add 50 ml of TISAB to each beaker. Place the electrode in the most dilute standard solution. When a steady millivolt reading is obtained, plot the value on the linear axis of semilog graph paper versus concentration on the log axis. Plot the nominal value for concentration of the standard on the log axis, e.g., when 50 ml of 10^{-2}M standard is diluted with 50 ml of TISAB, the concentration is still designated "10^{-2}M."

Between measurements soak the fluoride sensing electrode in deionized distilled water for 30 seconds, and then remove and blot dry. Analyze the standards going from dilute to concentrated standards. A straight-line calibration curve will be obtained, with nominal concentrations of 10^{-4}, 10^{-3}, 10^{-2}, and 10^{-1}fluoride molarity on the log axis plotted versus electrode potential (in mv) on the linear scale. Some electrodes may be slightly nonlinear between $10^{-5}$and 10^{-4}M. If this occurs, use additional standards between these two concentrations.

Calibrate the fluoride electrode daily, and check it hourly. Prepare fresh fluoride standardizing solutions daily (10^{-2}M or less). Store fluoride standardizing solutions in polyethylene or polypropylene containers.

NOTE: Certain specific ion meters have been designed specifically for fluoride electrode use and give a direct readout of fluoride ion concentration. These meters may be used in lieu of calibration curves for fluoride measurements over narrow concentration ranges. Calibrate the meter according to the manufacturer's instructions.)

9. *Calculations*

Carry out calculations, retaining at least one extra decimal figure beyond that of the acquired data. Round off figures after final calculation.

9.1 Nomenclature. Same as Method 13A, Section 9.1. In addition:

M=F concentration from calibration curve, molarity.

9.2 Average Dry Gas Meter Temperature and Average Orifice Pressure Drop, Dry Gas Volume, Volume of Water Vapor and Moisture Content, Fluoride Concentration in Stack Gas, and Isokinetic Variation and Acceptable Results. Same as Method 13A, Sections 9.2 to 9.4, 9.5.2, and 9.6, respectively.

9.3 Fluoride in Sample. Calculate the amount of F in the sample using the following:

$$F_t = K \frac{V_t}{A_t} V_d M \qquad \text{Eq. 13B-1}$$

Where:

K=19 mg/millimole.

10. *Bibliography*

1. Same as Method 13A, Citations 1 and 2 of Bibliography.

2. MacLeod, Kathryn E. and Howard L. Crist. Comparison of the SPADNS—Zirconium Lake and Specific Ion Electrode Methods of Fluoride Determination in Stack Emission Samples. Analytical Chemistry. *45:*1272–1273. 1973.

METHOD 14—DETERMINATION OF FLUORIDE EMISSIONS FROM POTROOM ROOF MONITORS FOR PRIMARY ALUMINUM PLANTS

1. *Applicability and Principle*

1.1 Applicability. This method is applicable for the determination of fluoride emissions from stationary sources only when specified by the test procedures for determining compliance with new source performance standards.

1.2 Principle. Gaseous and particulate fluoride roof monitor emissions are drawn into a permanent sampling manifold through several large nozzles. The sample is transported from the sampling manifold to ground level through a duct. The gas in the duct is sampled using Method 13A or 13B—Determination of Total Fluoride Emissions from Stationary Sources. Effluent velocity and volumetric flow rate are determined with anemometers located in the roof monitor.

2. *Apparatus*

2.1 Velocity Measurement Apparatus.

2.1.1 Anemometers. Propeller anemometers, or equivalent. Each anemometer shall meet the following specifications: (1) Its propeller shall be made of polystyrene, or similar material of uniform density. To insure uniformity of performance among propellers, it is desirable that all propellers be made from the same mold; (2) The propeller shall be properly balanced, to optimize performance; (3) When the anemometer is mounted horizontally, its threshold velocity shall not exceed 15 m/min (50 fpm); (4) The measurement range of the anemometer shall extend to at least 600 m/min (2,000 fpm); (5) The anemometer shall be able to withstand prolonged exposure to dusty and corrosive environments; one way of achieving this is to continuously purge the bearings of the anemometer with filtered air during operation; (6) All anemometer components shall be properly shielded or encased, such that the performance of the anemometer is uninfluenced by potroom magnetic field effects; (7) A known relationship shall exist between the electrical output signal from the anemometer generator and the propeller shaft rpm, at a minimum of three evenly spaced rpm settings between 60 and 1800 rpm; for the 3 settings, use 60±15, 900±100, and 1800±100 rpm. Anemometers having other types of output signals (e.g., optical) may be used, subject to the approval of the Administrator. If other types of anemometers are used, there must be a known relationship (as described above) between output signal and shaft rpm; also, each anemometer must be equipped with a suitable readout system (See Section 2.1.3).

2.1.2 Installation of Anemometers.

2.1.2.1 If the affected facility consists of a single, isolated potroom (or potroom segment), install at least one anemometer for every 85 m of roof monitor length. If the length of the roof monitor divided by 85 m is not a whole number, round the fraction to the nearest whole number to determine the number of anemometers needed. For monitors that are less than 130 m in length, use at least two anemometers. Divide the monitor cross-section into as many equal areas as anemometers and locate an anemometer at the centroid of each equal area. See exception in Section 2.1.2.3.

2.1.2.2 If the affected facility consists of two or more potrooms (or potroom segments) ducted to a common control device, install anemometers in each potroom (or segment) that contains a sampling manifold. Install at least one anemometer for every 85 m of roof monitor length of the potroom (or segment). If the potroom (or segment) length divided by 85 is not a whole number, round the fraction to the nearest whole number to determine the number of anemometers needed. If the potroom (or segment) length is less than 130 m, use at least two anemometers. Divide the potroom (or segment) monitor cross-section into as many equal areas as anemometers and locate an anemometer at the centroid of each equal area. See exception in Section 2.1.2.3.

2.1.2.3 At least one anemometer shall be installed in the immediate vicinity (i.e., within 10 m) of the center of the manifold (See Section 2.2.1). For its placement in relation to the width of the monitor, there are two alternatives. The first is to make a velocity traverse of the width of the roof monitor where an anemometer is to be placed

and install the anemometer at a point of average velocity along this traverse. The traverse may be made with any suitable low velocity measuring device, and shall be made during normal process operating conditions.

The second alternative, at the option of the tester, is to install the anemometer halfway across the width of the roof monitor. In this latter case, the velocity traverse need not be conducted.

2.1.3 Recorders. Recorders, equipped with suitable auxiliary equipment (e.g. transducers) for converting the output signal from each anemometer to a continuous recording of air flow velocity, or to an integrated measure of volumetric flowrate. A suitable recorder is one that allows the output signal from the propeller anemometer to be read to within 1 percent when the velocity is between 100 and 120 m/min (350 and 400 fpm). For the purpose of recording velocity, ''continuous'' shall mean one readout per 15-minute or shorter time interval. A constant amount of time shall elapse between readings. Volumetric flow rate may be determined by an electrical count of anemometer revolutions. The recorders or counters shall permit identification of the velocities or flowrate measured by each individual anemometer.

2.1.4 Pitot Tube. Standard-type pitot tube, as described in Section 2.7 of Method 2, and having a coefficient of 0.99±0.01.

2.1.5 Pitot Tube (Optional). Isolated, Type S pitot, as described in Section 2.1 of Method 2. The pitot tube shall have a known coefficient, determined as outlined in Section 4.1 of Method 2.

2.1.6 Differential Pressure Gauge. Inclined manometer or equivalent, as described in Section 2.1.2 of Method 2.

2.2 Roof Monitor Air Sampling System.

2.2.1 Sampling Ductwork. A minimum of one manifold system shall be installed for each potroom group (as defined in Subpart S, Section 60.191). The manifold system and connecting duct shall be permanently installed to draw an air sample from the roof monitor to ground level. A typical installation of a duct for drawing a sample from a roof monitor to ground level is shown in Figure 14–1. A plan of a manifold system that is located in a roof monitor is shown in Figure 14.2. These drawings represent a typical installation for a generalized roof monitor. The dimensions on these figures may be altered slightly to make the manifold system fit into a particular roof monitor, but the general configuration shall be followed. There shall be eight nozzles, each having a diameter of 0.40 to 0.50 m. Unless otherwise specified by the Administrator, the length of the manifold system from the first nozzle to the eighth shall be 35 m or eight percent of the length of the potroom (or potroom segment) roof monitor, whichever is greater. The duct leading from the roof monitor manifold shall be round with a diameter of 0.30 to 0.40 m. As shown in Figure 14–2, each of the sample legs of the manifold shall have a device, such as a blast gate or valve, to enable adjustment of the flow into each sample nozzle.

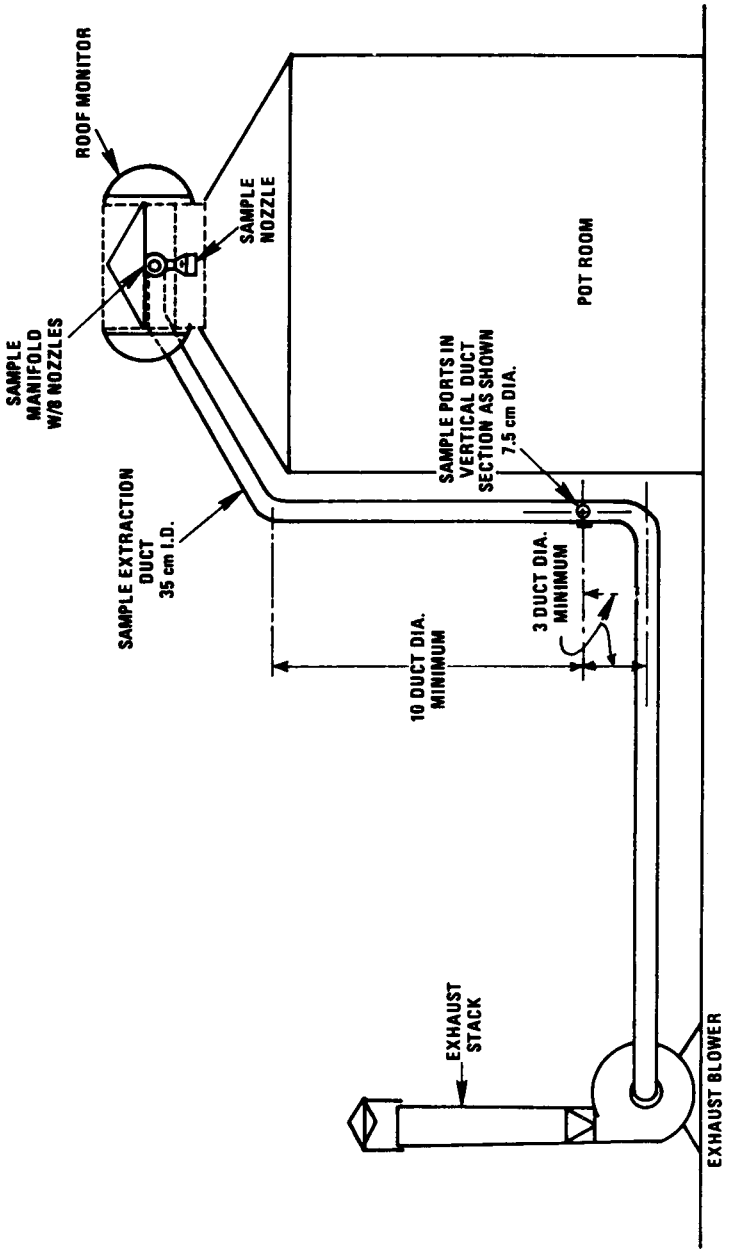

Figure 14-1. Roof monitor sampling system.

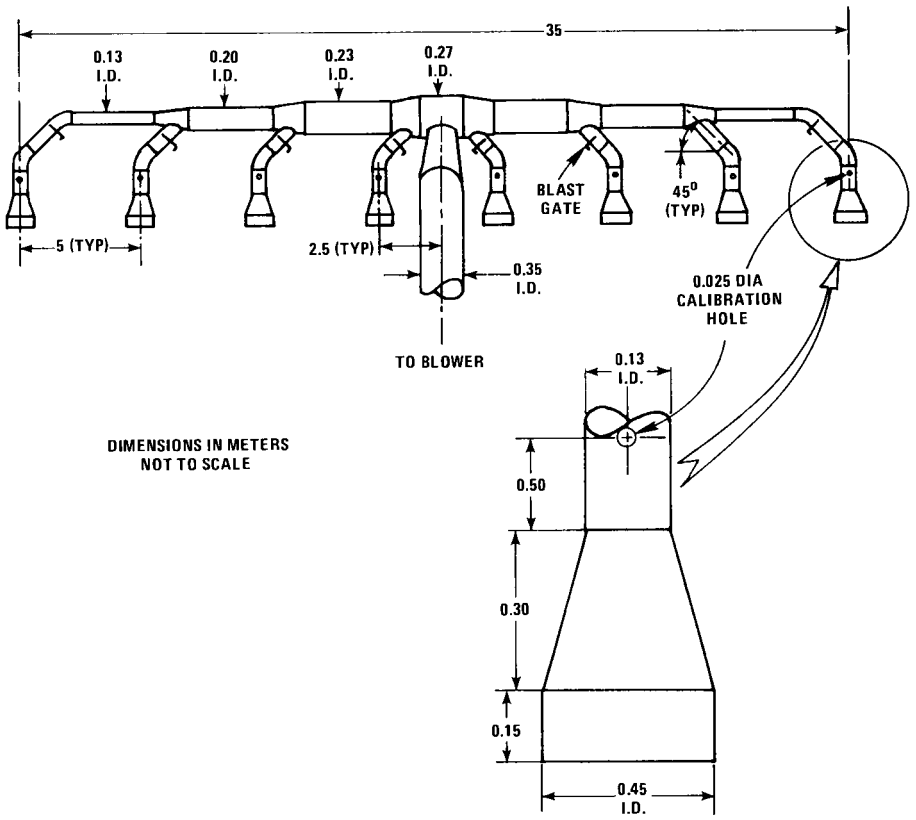

Figure 14-2. Sampling manifold and nozzles.

The manifold shall be located in the immediate vicinity of one of the propeller anemometers (see Section 2.1.2.3) and as close as possible to the midsection of the potroom (or potroom segment). Avoid locating the manifold near the end of a potroom or in a section where the aluminum reduction pot arrangement is not typical of the rest of the potroom (or potroom segment). Center the sample nozzles in the throat of the roof monitor (see Figure 14–1). Construct all sample-exposed surfaces within the nozzles, manifold and sample duct of 316 stainless steel. Aluminum may be used if a new ductwork system is conditioned with fluoride-laden roof monitor air for a period of six weeks prior to initial testing. Other materials of construction may be used if it is demonstrated through comparative testing that there is no loss of fluorides in the system. All connections in the ductwork shall be leak free.

Locate two sample ports in a vertical section of the duct between the roof monitor and exhaust fan. The sample ports shall be at least 10 duct diameters downstream and three diameters upstream from any flow disturbance such as a bend or contraction. The two sample ports shall be situated 90° apart. One of the sample ports shall be situated so that the duct can be traversed in the plane of the nearest upstream duct bend.

2.2.2 Exhaust Fan. An industrial fan or blower shall be attached to the sample duct at ground level (see Figure 14–1). This exhaust fan shall have a capacity such that a large enough volume of air can be pulled through the ductwork to maintain an isokinetic sampling rate in all the sample nozzles for all flow rates normally encountered in the roof monitor.

The exhaust fan volumetric flow rate shall be adjustable so that the roof monitor air can be drawn isokinetically into the sample

nozzles. This control of flow may be achieved by a damper on the inlet to the exhauster or by any other workable method.

2.3 Temperature Measurement Apparatus.

2.3.1 Thermocouple. Install a thermocouple in the roof monitor near the sample duct. The thermocouple shall conform to the specifications outlined in Section 2.3 of Method 2.

2.3.2 Signal Transducer. Transducer, to change the thermocouple voltage output to a temperature readout.

2.3.3 Thermocouple Wire. To reach from roof monitor to signal transducer and recorder.

2.3.4 Recorder. Suitable recorder to monitor the output from the thermocouple signal transducer.

2.4 Fluoride Sampling Train. Use the train described in Method 13A or 13B.

3. *Reagents*

3.1 Sampling and Analysis. Use reagents described in Method 13A or 13B.

4. *Calibration*

4.1 Initial Performance Checks. Conduct these checks within 60 days prior to the first performance test.

4.1.1 Propeller Anemometers. Anemometers which meet the specifications outlined in Section 2.1.1 need not be calibrated, provided that a reference performance curve relating anemometer signal output to air velocity (covering the velocity range of interest) is available from the manufacturer. For the purpose of this method, a ''reference'' performance curve is defined as one that has been derived from primary standard calibration data, with the anemometer mounted vertically. ''Primary standard'' data are obtainable by: (1) Direct calibration of one or more of the anemometers by the National Bureau of Standards (NBS); (2) NBS-traceable calibration; or (3) Calibration by direct measurement of fundamental parameters such as length and time (e.g., by moving the anemometers through still air at measured rates of speed, and recording the output signals). If a reference performance curve is not available from the manufacturer, such a curve shall be generated, using one of the three methods described as above. Conduct a performance-check as outlined in Sections 4.1.1.1 through 4.1.1.3, below. Alternatively, the tester may use any other suitable method, subject to the approval of the Administrator, that takes into account the signal output, propeller condition and threshold velocity of the anemometer.

4.1.1.1 Check the signal output of the anemometer by using an accurate rpm generator (see Figure 14–3) or synchronous motors to spin the propeller shaft at each of the three rpm settings described in Section 2.1.1 above (specification No. 7), and measuring the output signal at each setting. If, at each setting, the output signal is within ±5 percent of the manufacturer's value, the anemometer can be used. If the anemometer performance is unsatisfactory, the anemometer shall either be replaced or repaired.

4.1.1.2 Check the propeller condition, by visually inspecting the propeller, making note of any significant damage or warpage; damaged or deformed propellers shall be replaced.

4.1.1.3 Check the anemometer threshold velocity as follows: With the anemometer mounted as shown in Figure 14–4(A), fasten a known weight (a straight-pin will suffice) to the anemometer propeller at a fixed distance from the center of the propeller shaft. This will generate a known torque; for example, a 0.1 g weight, placed 10 cm from the center of the shaft, will generate a torque of 1.0 g-cm. If the known torque causes the propeller to rotate downward, approximately 90° [see Figure 14–4(B)], then the known torque is greater than or equal to the starting torque; if the propeller fails to rotate approximately 90°, the known torque is less than the starting torque. By trying different combinations of weight and distance, the starting torque of a particular anemometer can be satisfactorily estimated. Once an estimate of the starting torque has been obtained, the threshold velocity of the anemometer (for horizontal mounting) can be estimated from a graph such as Figure 14–5 (obtained from the manufacturer). If the horizontal threshold velocity is acceptable [<15 m/min (50 fpm), when this technique is used], the anemometer can be used. If the threshold velocity of an anemometer is found to be unacceptably high, the anemometer shall either be replaced or repaired.

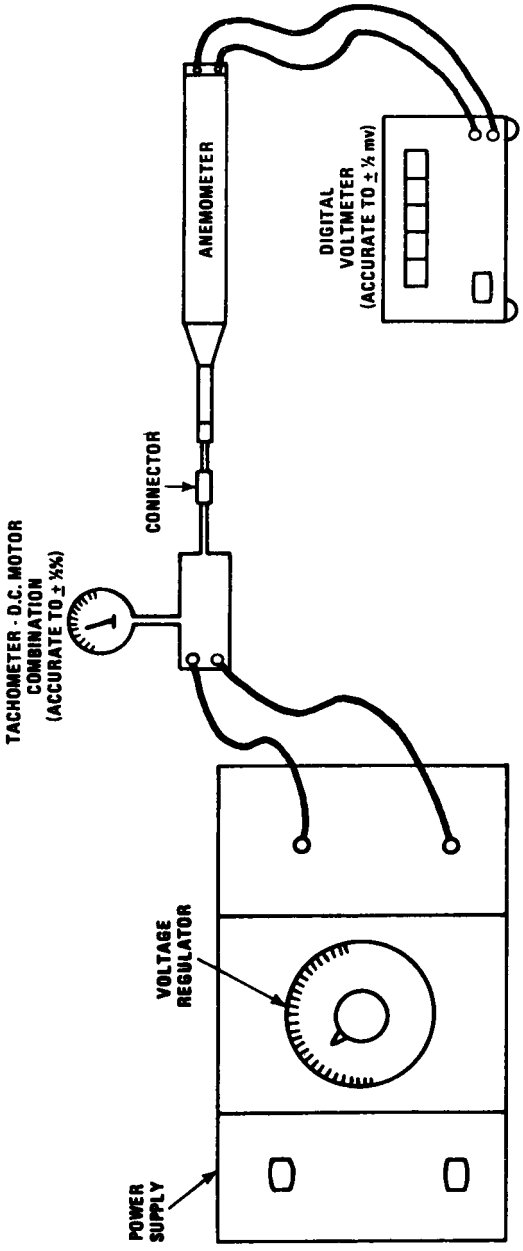

Figure 14-3. Typical RPM generator.

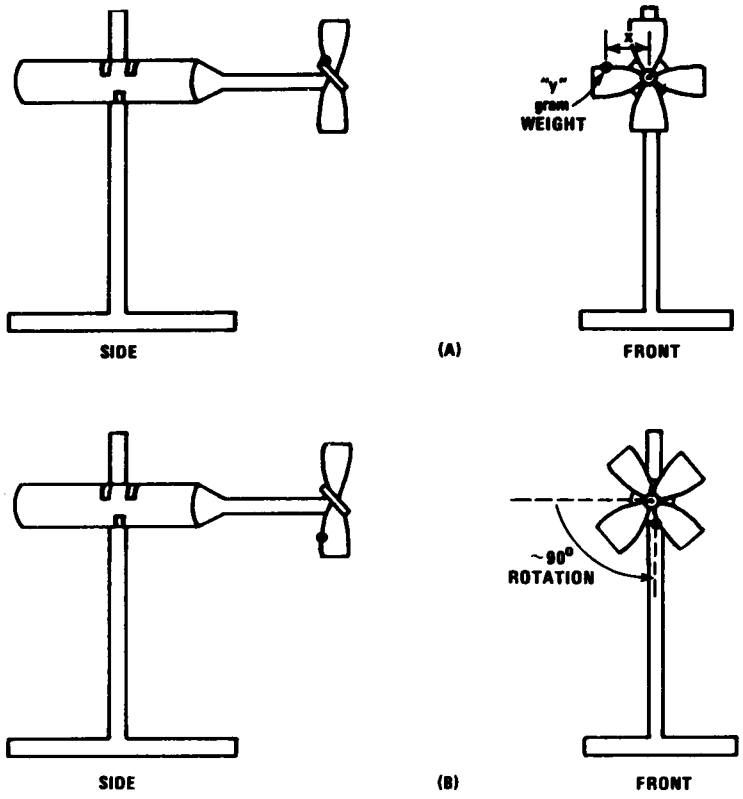

Figure 14-4. Check of anemometer starting torque. A "y" gram weight placed "x" centimeters from center of propeller shaft produces a torque of "xy" g-cm. The minimum torque which produces a 90° (approximately) rotation of the propeller is the "starting torque."

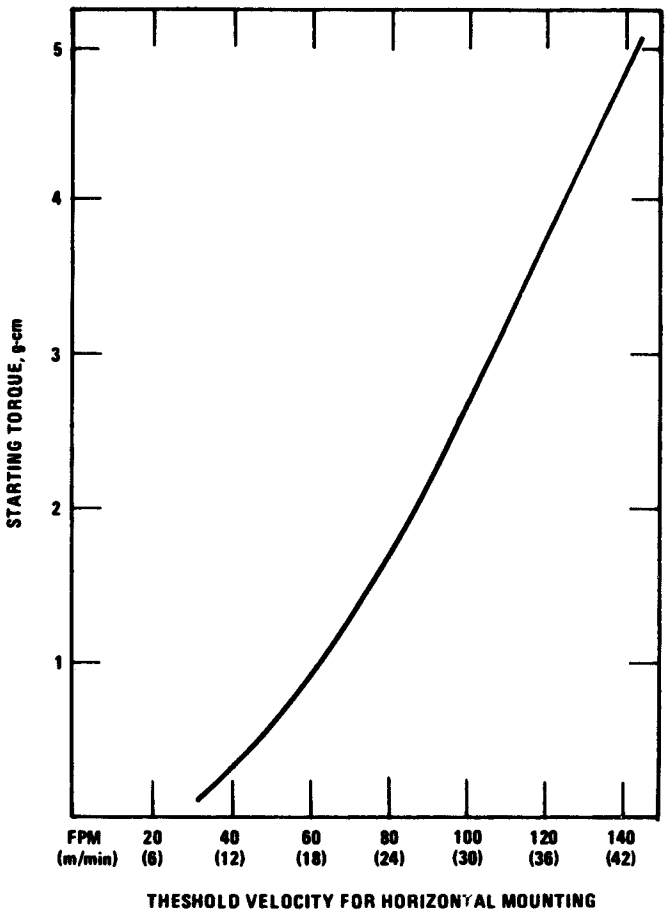

Figure 14-5. Typical curve of starting torque vs horizontal threshold velocity for propeller anemometers. Based on data obtained by R.M. Young Company, May, 1977.

4.1.2 Thermocouple. Check the calibration of the thermocouple-potentiometer system, using the procedures outlined in Section 4.3 of Method 2, at temperatures of 0, 100, and 150 °C. If the calibration is off by more than 5 °C at any of the temperatures, repair or replace the system; otherwise, the system can be used.

4.1.3 Recorders and/or Counters. Check the calibration of each recorder and/or counter (see Section 2.1.3) at a minimum of three points, approximately spanning the expected range of velocities. Use the calibration procedures recommended by the manufacturer, or other suitable procedures (subject to the approval of the Administrator). If a recorder or counter is found to be out of calibration, by an average amount greater than 5 percent for the three calibration points, replace or repair the system; otherwise, the system can be used.

4.1.4 Manifold Intake Nozzles. In order to balance the flow rates in the eight individual nozzles, proceed as follows: Adjust the exhaust fan to draw a volumetric flow rate (refer to Equation 14–1) such that the entrance velocity into each manifold nozzle approximates the average effluent velocity in the roof monitor. Measure the velocity of the air entering each nozzle by inserting a standard pitot tube into a 2.5 cm or less diameter hole (see Figure 14–2) located in the manifold

between each blast gate (or valve) and nozzle. Note that a standard pitot tube is used, rather than a type S, to eliminate possible velocity measurement errors due to cross-section blockage in the small (0.13 m diameter) manifold leg ducts. The pitot tube tip shall be positioned at the center of each manifold leg duct. Take care to insure that there is no leakage around the pitot tube, which could affect the indicated velocity in the manifold leg. If the velocity of air being drawn into each nozzle is not the same, open or close each blast gate (or valve) until the velocity in each nozzle is the same. Fasten each blast gate (or valve) so that it will remain in this position and close the pitot port holes. This calibration shall be performed when the manifold system is installed. Alternatively, the manifold may be preassembled and the flow rates balanced on the ground, before being installed.

4.2 Periodical Performance Checks. Twelve months after their initial installation, check the calibration of the propeller anemometers, thermocouple-potentiometer system, and the recorders and/or counters as in Section 4.1. If the above systems pass the performance checks, (i.e., if no repair or replacement of any component is necessary), continue with the performance checks on a 12-month interval basis. However, if any of the above systems fail the performance checks, repair or replace the system(s) that failed and conduct the periodical performance checks on a 3-month interval basis, until sufficient information (consult with the Administrator) is obtained to establish a modified performance check schedule and calculation procedure.

NOTE: If any of the above systems fail the initial performance checks, the data for the past year need not be recalculated.

5. *Procedure*

5.1 Roof Monitor Velocity Determination.

5.1.1 Velocity Estimate(s) for Setting Isokinetic Flow. To assist in setting isokinetic flow in the manifold sample nozzles, the anticipated average velocity in the section of the roof monitor containing the sampling manifold shall be estimated prior to each test run. The tester may use any convenient means to make this estimate (e.g., the velocity indicated by the anemometer in the section of the roof monitor containing the sampling manifold may be continuously monitored during the 24-hour period prior to the test run).

If there is question as to whether a single estimate of average velocity is adequate for an entire test run (e.g., if velocities are anticipated to be significantly different during different potroom operations), the tester may opt to divide the test run into two or more ''sub-runs,'' and to use a different estimated average velocity for each sub-run (see Section 5.3.2.2.)

5.1.2 Velocity Determination During a Test Run. During the actual test run, record the velocity or volumetric flowrate readings of each propeller anemometer in the roof monitor. Readings shall be taken for each anemometer every 15 minutes or at shorter equal time intervals (or continuously).

5.2 Temperature Recording. Record the temperature of the roof monitor every 2 hours during the test run.

5.3 Sampling.

5.3.1 Preliminary Air Flow in Duct. During 24 hours preceding the test, turn on the exhaust fan and draw roof monitor air through the manifold duct to condition the ductwork. Adjust the fan to draw a volumetric flow through the duct such that the velocity of gas entering the manifold nozzles approximates the average velocity of the air exiting the roof monitor in the vicinity of the sampling manifold.

5.3.2 Manifold Isokinetic Sample Rate Adjustment(s).

5.3.2.1 Initial Adjustment. Prior to the test run (or first sub-run, if applicable; see Sections 5.1.1 and 5.3.2.2), adjust the fan to provide the necessary volumetric flowrate in the sampling duct, so that air enters the manifold sample nozzles at a velocity equal to the appropriate estimated average velocity determined under Section 5.1.1. Equation 14–1 gives the correct stream velocity needed in the duct at the sampling location, in order for sample gas to be drawn isokinetically into the manifold nozzles. Next, verify that the correct stream velocity has been achieved, by performing a pitot tube traverse of the sample duct (using either a standard or type S pitot tube); use the procedure outlined in Method 2.

$$v_d = \frac{8(D_n)^2}{(D_d)^2}(v_m)\frac{1\,\text{min}}{60\,\text{sec}} \qquad \text{Eq. 14-1}$$

Where:

v_d=Desired velocity in duct at sampling location, m/sec.

D_n=Diameter of a roof monitor manifold nozzle, m.

D_d=Diameter of duct at sampling location, m.

v_m=Average velocity of the air stream in the roof monitor, m/min, as determined under Section 5.1.1.

5.3.2.2 Adjustments During Run. If the test run is divided into two or more ''sub-runs'' (see Section 5.1.1), additional isokinetic rate adjustment(s) may become necessary during the run. Any such adjustment shall be made just before the start of a sub-run, using the procedure outlined in Section 5.3.2.1 above.

NOTE: Isokinetic rate adjustments are not permissible during a sub-run.

5.3.3 Sample Train Operation. Sample the duct using the standard fluoride train and methods described in Methods 13A and 13B. Determine the number and location of the sampling points in accordance with Method 1. A single train shall be used for the entire sampling run. Alternatively, if two or more sub-runs are performed, a separate train may be used for each sub-run; note, however, that if this option is chosen, the area of the sampling nozzle shall be the same (± 2 percent) for each train. If the test run is divided into sub-runs, a complete traverse of the duct shall be performed during each sub-run.

5.3.4 Time Per Run. Each test run shall last 8 hours or more; if more than one run is to be performed, all runs shall be of approximately the same (± 10 percent) length. If question exists as to the representativeness of an 8-hour test, a longer period should be selected. Conduct each run during a period when all normal operations are performed underneath the sampling manifold. For most recently-constructed plants, 24 hours are required for all potroom operations and events to occur in the area beneath the sampling manifold. During the test period, all pots in the potroom group shall be operated such that emissions are representative of normal operating conditions in the potroom group.

5.3.5 Sample Recovery. Use the sample recovery procedure described in Method 13A or 13B.

5.4 Analysis. Use the analysis procedures described in Method 13A or 13B.

6. *Calculations*

6.1 Isokinetic Sampling Check.

6.1.1 Calculate the mean velocity (v_m) for the sampling run, as measured by the anemometer in the section of the roof monitor containing the sampling manifold. If two or more sub-runs have been performed, the tester may opt to calculate the mean velocity for each sub-run.

6.1.2 Using Equation 14–1, calculate the expected average velocity (v_d) in the sampling duct, corresponding to each value of v_m obtained under Section 6.1.1.

6.1.3 Calculate the actual average velocity (v_s) in the sampling duct for each run or sub-run, according to Equation 2–9 of Method 2, and using data obtained from Method 13.

6.1.4 Express each value v_s from Section 6.1.3 as a percentage of the corresponding v_d value from Section 6.1.2.

6.1.4.1 If v_s is less than or equal to 120 percent of v_d, the results are acceptable (note that in cases where the above calculations have been performed for each sub-run, the results are acceptable if the average percentage for all sub-runs is less than or equal to 120 percent).

6.1.4.2 If v_s is more than 120 percent of v_d, multiply the reported emission rate by the following factor.

$$1+\frac{(100\ v_s / v_d)-120}{200}$$

6.2 Average Velocity of Roof Monitor Gases. Calculate the average roof monitor velocity using all the velocity or volumetric flow readings from Section 5.1.2.

6.3 Roof Monitor Temperature. Calculate the mean value of the temperatures recorded in Section 5.2.

6.4 Concentration of Fluorides in Roof Monitor Air.

6.4.1 If a single sampling train was used throughout the run, calculate the average fluoride concentration for the roof monitor using Equation 13A–2 of Method 13A.

6.4.2 If two or more sampling trains were used (i.e., one per sub-run), calculate the average fluoride concentration for the run, as follows:

$$\bar{C}_S = \frac{\sum_{i=1}^{n} (F_t)_i}{\sum_{i=1}^{n} \left(V_{m(std)}\right)_i} \qquad \text{Eq. 14-2}$$

Where:

C_s=Average fluoride concentration in roof monitor air, mg F/dscm (mg F/dscf).

F_t=Total fluoride mass collected during a particular sub-run, mg F (from Equation 13A–1 of Method 13A or Equation 13B–1 of Method 13B).

$V_{m(std)}$=Total volume of sample gas passing through the dry gas meter during a particular sub-run, dscm (dscf) (see Equation 5–1 of Method 5).

n=Total number of sub-runs.

6.5 Average volumetric flow from the roof monitor of the potroom(s) (or potroom segment(s)) containing the anemometers is given in Equation 14–3.

$$Q_{sd} = \frac{V_{mt} M_d P_m (293^{\circ}K) A}{(t_m + 273^{\circ})(760\ \text{mm Hg})} \qquad \text{Eq. 14-3}$$

Where:

Q_{sd}=Average volumetric flow from roof monitor at standard conditions on a dry basis, m^3/min.

A=Roof monitor open area, m^2.

v_{mt}=Average velocity of air in the roof monitor, m/min, from Section 6.2.

P_m=Pressure in the roof monitor; equal to barometric pressure for this application, mm Hg.

t_m=Roof monitor temperature, °C, from Section 6.3.

M_d=Mole fraction of dry gas, which is given by:

$M_d=(1-B_{ws})$

NOTE: B_{ws} is the proportion by volume of water vapor in the gas stream, from Equation 5–3, Method 5.

6.6 Conversion Factors.

1 ft^3=0.02832 m^3

1 hr=60 min

7. *Bibliography*

1. Shigehara, R. T., A Guideline for Evaluating Compliance Test Results (Isokinetic Sampling Rate Criterion). U.S. Environmental Protection Agency, Emission Measurement Branch. Research Triangle Park, NC. August 1977.

METHOD 14A—DETERMINATION OF TOTAL FLUORIDE EMISSIONS FROM SELECTED SOURCES AT PRIMARY ALUMINUM PRODUCTION FACILITIES

NOTE: This method does not include all the specifications (e.g., equipment and supplies) and procedures (e.g., sampling) essential to its performance. Some material is incorporated by reference from other methods in this part. Therefore, to obtain reliable results, persons using this method should have a thorough knowledge of at least the following additional test methods: Method 5, Methods 13A and 13B, and Method 14 of this appendix.

1.0 *Scope and Application*

1.1 Analytes.

Analyte	CAS No.	Sensitivity
Total fluorides	None assigned	Not determined.
Includes hydrogen fluoride.	007664–39–3	Not determined.

1.2 Applicability. This method is applicable for the determination of total fluorides (TF) emissions from sources specified in the applicable regulation. This method was developed by consensus with the Aluminum Association and the U.S. Environmental Protection Agency (EPA).

2.0 *Summary of Method*

2.1 Total fluorides, in the form of solid and gaseous fluorides, are withdrawn from the ascending air stream inside of an aluminum reduction potroom and, prior to exiting the potroom roof monitor, into a specific cassette arrangement. The cassettes are connected by tubing to flowmeters and a manifold system that allows for the equal distribution of volume pulled through each cassette, and finally to a dry gas meter. The cassettes have a specific internal arrangement of one unaltered cellulose filter and support pad in the first section of the cassette for solid fluoride retention and two cellulose filters with support pads that are impregnated with sodium formate for the chemical absorption of gaseous fluorides in the following two sections of the cassette. A minimum of eight cassettes shall be used for a potline and shall be strategically located at equal intervals across the potroom roof so as to encompass a minimum of 8 percent of the total length of the potroom. A greater number of cassettes may be used should the regulated facility choose to do so. The mass flow rate of pollutants is determined with anemometers and temperature sensing devices located immediately below the opening of the roof monitor and spaced evenly within the cassette group.

3.0 *Definitions*

3.1 Cassette. A segmented, styrene acrylonitrile cassette configuration with three separate segments and a base, for the purpose of this method, to capture and retain fluoride from potroom gases.

3.2 Cassette arrangement. The cassettes, tubing, manifold system, flowmeters, dry gas meter, and any other related equipment associated with the actual extraction of the sample gas stream.

3.3 Cassette group. That section of the potroom roof monitor where a distinct group of cassettes is located.

3.4 Potline. A single, discrete group of electrolytic reduction cells electrically connected in series, in which alumina is reduced to form aluminum.

3.5 Potroom. A building unit that houses a group of electrolytic reduction cells in which aluminum is produced.

3.6 Potroom group. An uncontrolled potroom, a potroom that is controlled individually, or a group of potrooms or potroom segments ducted to a common primary control system.

3.7 Primary control system. The equipment used to capture the gases and particulate matter generated during the reduction process and the emission control device(s) used to remove pollutants prior to discharge of the cleaned gas to the atmosphere.

3.8 Roof monitor. That portion of the roof of a potroom building where gases, not captured at the cell, exit from the potroom.

3.9 Total fluorides (TF). Elemental fluorine and all fluoride compounds as measured by Methods 13A or 13B of this appendix or by an approved alternative method.

4.0 *Interferences and Known Limitations*

4.1 There are two principal categories of limitations that must be addressed when

using this method. The first category is sampling bias and the second is analytical bias. Biases in sampling can occur when there is an insufficient number of cassettes located along the roof monitor of a potroom or if the distribution of those cassettes is spatially unequal. Known sampling biases also can occur when there are leaks within the cassette arrangement and if anemometers and temperature devices are not providing accurate data. Applicable instruments must be properly calibrated to avoid sampling bias. Analytical biases can occur when instrumentation is not calibrated or fails calibration and the instrument is used out of proper calibration. Additionally, biases can occur in the laboratory if fusion crucibles retain residual fluorides over lengthy periods of use. This condition could result in falsely elevated fluoride values. Maintaining a clean work environment in the laboratory is crucial to producing accurate values.

4.2 Biases during sampling can be avoided by properly spacing the appropriate number of cassettes along the roof monitor, conducting leak checks of the cassette arrangement, calibrating the dry gas meter every 30 days, verifying the accuracy of individual flowmeters (so that there is no more than 5 percent difference in the volume pulled between any two flowmeters), and calibrating or replacing anemometers and temperature sensing devices as necessary to maintain true data generation.

4.3 Analytical biases can be avoided by calibrating instruments according to the manufacturer's specifications prior to conducting any analyses, by performing internal and external audits of up to 10 percent of all samples analyzed, and by rotating individual crucibles as the ''blank'' crucible to detect any potential residual fluoride carry-over to samples. Should any contamination be discovered in the blank crucible, the crucible shall be thoroughly cleaned to remove any detected residual fluorides and a ''blank'' analysis conducted again to evaluate the effectiveness of the cleaning. The crucible shall remain in service as long as no detectable residual fluorides are present.

5.0 *Safety*

5.1 This method may involve the handling of hazardous materials in the analytical phase. This method does not purport to address all of the potential safety hazards associated with its use. It is the responsibility of the user to establish appropriate safety and health practices and determine the applicability of regulatory limitations prior to performing this test method.

5.2 Corrosive reagents. The following reagents are hazardous. Personal protective equipment and safe procedures are useful in preventing chemical splashes. If contact occurs, immediately flush with copious amounts of water for at least 15 minutes. Remove clothing under shower and decontaminate. Treat residual chemical burn as thermal burn.

5.3 Sodium Hydroxide (NaOH). Causes severe damage to eyes and skin. Inhalation causes irritation to nose, throat, and lungs. Reacts exothermically with limited amounts of water.

5.4 Perchloric Acid ($HClO_4$). Corrosive to eyes, skin, nose, and throat. Provide ventilation to limit exposure. Very strong oxidizer. Keep separate from water and oxidizable materials to prevent vigorous evolution of heat, spontaneous combustion, or explosion. Heat solutions containing HClO4 only in hoods specifically designed for $HClO_4$.

6.0 *Equipment and Supplies*

6.1 Sampling.

6.1.1 Cassette arrangement. The cassette itself is a three-piece, styrene acrylonitrile cassette unit (a Gelman Sciences product), 37 millimeter (mm), with plastic connectors. In the first section (the intake section), an untreated Gelman Sciences 37 mm, 0.8 micrometer (μm) DM–800 metricel membrane filter and cellulose support pad, or equivalent, is situated. In the second and third segments of the cassette there is placed one each of Gelman Sciences 37 mm, 5 μm GLA–5000 low-ash PVC filter with a cellulose support pad or equivalent product. Each of these two filters and support pads shall have been immersed in a solution of 10 percent sodium formate (volume/volume in an ethyl alcohol solution). The impregnated pads shall be placed in the cassette segments while still wet and heated at 50 °C (122 °F) until the pad is completely dry. It is important to check for a proper fit of the filter and support pad to the cassette segment to ensure that there are no areas where gases could bypass the filter. Once all of the cassette segments have been prepared, the cassette shall be assembled and a plastic plug shall be inserted into the exhaust hole of the cassette. Prior to placing the cassette into service, the space between each segment shall be taped with an appropriately durable tape to prevent the infiltration of gases through the points of connection, and an aluminum nozzle shall be inserted into the intake hole of the cassette. The aluminum nozzle shall have a short section of tubing placed over the opening of the nozzle, with the tubing plugged to prevent dust from entering the nozzle and to prepare the nozzle for the cassette arrangement leak check. An alternate nozzle type can be used if historical results or scientific demonstration of applicability can be shown.

6.1.2 Anemometers and temperature sensing devices. To calculate the mass flow rate of TF from the roof monitor under standard conditions, anemometers that meet the specifications in section 2.1.1 in Method 14 of this appendix or an equivalent device yielding

equivalent information shall be used. A recording mechanism capable of accurately recording the exit gas temperature at least every 2 hours shall be used.

6.1.3 Barometer. To correct the volumetric flow from the potline roof monitor to standard conditions, a mercury (Hg), aneroid, or other barometer capable of measuring atmospheric pressure to within 2.5 mm [0.1 inch (in)] Hg shall be used.

NOTE: The barometric reading may be obtained from a nearby National Weather Service Station. In this case, the station value (which is absolute barometric pressure) shall be requested and an adjustment for elevation differences between the weather station and the sampling point shall be made at a rate of minus 2.5 mm (0.1 in) Hg per 30 meters (m) [100 feet (ft)] elevation increase or plus 2.5 mm (0.1 in) Hg per 30 m (100 ft) elevation decrease.

6.2 Sample recovery.

6.2.1 Hot plate.

6.2.2 Muffle furnace.

6.2.3 Nickel crucible.

6.2.4 Stirring rod. Teflon'.

6.2.5 Volumetric flask. 50-milliliter (ml).

6.2.6 Plastic vial. 50-ml.

6.3 Analysis.

6.3.1 Primary analytical method. An automated analyzer having the following components or equivalent: a multichannel proportioning pump, multiposition sampler, voltage stabilizer, colorimeter, instrument recording device, microdistillation apparatus, flexible Teflon® heating bath, vacuum pump, pulse suppressers and an air flow system.

6.3.2 Secondary analytical method. Specific Ion Electrode (SIE).

7.0 *Reagents and Standards*

7.1 Water. Deionized distilled to conform to ASTM Specification D 1193–77, Type 3 (incorporated by reference in §60.17(a)(22) of this part). The $KMnO_4$ test for oxidizable organic matter may be omitted when high concentrations of organic matter are not expected to be present.

7.2 Calcium oxide.

7.3 Sodium hydroxide (NaOH). Pellets.

7.4 Perchloric acid ($HClO_4$). Mix 1:1 with water. Sulfuric acid (H_2SO_4) may be used in place of $HClO_4$.

7.5 Audit samples. The audit samples discussed in section 9.1 shall be prepared from reagent grade, water soluble stock reagents, or purchased as an aqueous solution from a commercial supplier. If the audit stock solution is purchased from a commercial supplier, the standard solution must be accompanied by a certificate of analysis or an equivalent proof of fluoride concentration.

8.0 *Sample Collection and Analysis*

8.1 Preparing cassette arrangement for sampling. The cassettes are initially connected to flexible tubing. The tubing is connected to flowmeters and a manifold system. The manifold system is connected to a dry gas meter (Research Appliance Company model 201009 or equivalent). The length of tubing is managed by pneumatically or electrically operated hoists located in the roof monitor, and the travel of the tubing is controlled by encasing the tubing in aluminum conduit. The tubing is lowered for cassette insertion by operating a control box at floor level. Once the cassette has been securely inserted into the tubing and the leak check performed, the tubing and cassette are raised to the roof monitor level using the floor level control box. Arrangements similar to the one described are acceptable if the scientific sample collection principles are followed.

8.2 Test run sampling period. A test run shall comprise a minimum of a 24-hour sampling event encompassing at least eight cassettes per potline (or four cassettes per potroom group). Monthly compliance shall be based on three test runs during the month. Test runs of greater than 24 hours are allowed; however, three such runs shall be conducted during the month.

8.3 Leak-check procedures.

8.3.1 Pretest leak check. A pretest leak-check is recommended; however, it is not required. To perform a pretest leak-check after the cassettes have been inserted into the tubing, isolate the cassette to be leak-checked by turning the valves on the manifold to stop all flows to the other sampling points connected to the manifold and meter. The cassette, with the plugged tubing section securing the intake of the nozzle, is subjected to the highest vacuum expected during the run. If no leaks are detected, the tubing plug can be briefly removed as the dry gas meter is rapidly turned off.

8.3.2 Post-test leak check. A leak check is required at the conclusion of each test run for each cassette. The leak check shall be performed in accordance with the procedure outlined in section 8.3.1 of this method except that it shall be performed at a vacuum greater than the maximum vacuum reached during the test run. If the leakage rate is found to be no greater than 4 percent of the average sampling rate, the results are acceptable. If the leakage rate is greater than 4 percent of the average sampling rate, either record the leakage rate and correct the sampling volume as discussed in section 12.4 of this method or void the test run if the minimum number of cassettes were used. If the number of cassettes used was greater than the minimum required, discard the leaking cassette and use the remaining cassettes for the emission determination.

8.3.3 Anemometers and temperature sensing device placement. Install the recording mechanism to record the exit gas temperature. Anemometers shall be installed as required in section 6.1.2 of Method 14 of this appendix, except replace the word ''manifold'' with ''cassette group'' in section 6.1.2.3.

These two different instruments shall be located near each other along the roof monitor. See conceptual configurations in Figures 14A–1, 14A–2, and 14A–3 of this method. Fewer temperature devices than anemometers may be used if at least one temperature device is located within the span of the cassette group. Other anemometer location siting scenarios may be acceptable as long as the exit velocity of the roof monitor gases is representative of the entire section of the potline being sampled.

8.4 Sampling. The actual sample run shall begin with the removal of the tubing and plug from the cassette nozzle. Each cassette is then raised to the roof monitor area, the dry gas meter is turned on, and the flowmeters are set to the calibration point, which allows an equal volume of sampled gas to enter each cassette. The dry gas meter shall be set to a range suitable for the specific potroom type being sampled that will yield valid data known from previous experience or a range determined by the use of the calculation in section 12 of this method. Parameters related to the test run that shall be recorded, either during the test run or after the test run if recording devices are used, include: anemometer data, roof monitor exit gas temperature, dry gas meter temperature, dry gas meter volume, and barometric pressure. At the conclusion of the test run, the cassettes shall be lowered, the dry gas meter turned off, and the volume registered on the dry gas meter recorded. The post-test leak check procedures described in section 8.3.2 of this method shall be performed. All data relevant to the test shall be recorded on a field data sheet and maintained on file.

8.5 Sample recovery.

8.5.1 The cassettes shall be brought to the laboratory with the intake nozzle contents protected with the section of plugged tubing previously described. The exterior of cassettes shall carefully be wiped free of any dust or debris, making sure that any falling dust or debris does not present a potential laboratory contamination problem.

8.5.2 Carefully remove all tape from the cassettes and remove the initial filter, support pad, and all loose solids from the first (intake) section of the cassette. Fold the filter and support pad several times and, along with all loose solids removed from the interior of the first section of the cassette, place them into a nickel crucible. Using water, wash the interior of the nozzle into the same nickel crucible. Add 0.1 gram (g) [±0.1 milligram (mg)] of calcium oxide and a sufficient amount of water to make a loose slurry. Mix the contents of the crucible thoroughly with a Teflon'' stirring rod. After rinsing any adhering residue from the stirring rod back into the crucible, place the crucible on a hot plate or in a muffle furnace until all liquid is evaporated and allow the mixture to gradually char for 1 hour.

8.5.3 Transfer the crucible to a cold muffle furnace and ash at 600 °C (1,112 °F). Remove the crucible after the ashing phase and, after the crucible cools, add 3.0 g (±0.1 g) of NaOH pellets. Place this mixture in a muffle furnace at 600 °C (1,112 °F) for 3 minutes. Remove the crucible and roll the melt so as to reach all of the ash with the molten NaOH. Let the melt cool to room temperature. Add 10 to 15 ml of water to the crucible and place it on a hot plate at a low temperature setting until the melt is soft or suspended. Transfer the contents of the crucible to a 50-ml volumetric flask. Rinse the crucible with 20 ml of 1:1 perchloric acid or 20 ml of 1:1 sulfuric acid in two (2) 10 ml portions. Pour the acid rinse slowly into the volumetric flask and swirl the flask after each addition. Cool to room temperature. The product of this procedure is particulate fluorides.

8.5.4 Gaseous fluorides can be isolated for analysis by folding the gaseous fluoride filters and support pads to approximately ¼ of their original size and placing them in a 50-ml plastic vial. To the vial add exactly 10 ml of water and leach the sample for a minimum of 1 hour. The leachate from this process yields the gaseous fluorides for analysis.

9.0 *Quality Control*

9.1 Laboratory auditing. Laboratory audits of specific and known concentrations of fluoride shall be submitted to the laboratory with each group of samples submitted for analysis. An auditor shall prepare and present the audit samples as a ''blind'' evaluation of laboratory performance with each group of samples submitted to the laboratory. The audits shall be prepared to represent concentrations of fluoride that could be expected to be in the low, medium and high range of actual results. Average recoveries of all three audits must equal 90 to 110 percent for acceptable results; otherwise, the laboratory must investigate procedures and instruments for potential problems.

NOTE: The analytical procedure allows for the analysis of individual or combined filters and pads from the cassettes provided that equal volumes (±10 percent) are sampled through each cassette.

10.0 *Calibrations*

10.1 Equipment evaluations. To ensure the integrity of this method, periodic calibrations and equipment replacements are necessary.

10.1.1 Metering system. At 30-day intervals the metering system shall be calibrated. Connect the metering system inlet to the outlet of a wet test meter that is accurate to 1 percent. Refer to Figure 5–4 of Method 5 of this appendix. The wet-test meter shall have a capacity of 30 liters/revolution [1 cubic foot (ft^3)/revolution]. A spirometer of 400 liters (14 ft^3) or more capacity, or equivalent, may be used for calibration; however, a wet-test meter is usually more practical. The wet-test meter shall be periodically tested with a

spirometer or a liquid displacement meter to ensure the accuracy. Spirometers or wet-test meters of other sizes may be used, provided that the specified accuracies of the procedure are maintained. Run the metering system pump for about 15 min. with the orifice manometer indicating a median reading as expected in field use to allow the pump to warm up and to thoroughly wet the interior of the wet-test meter. Then, at each of a minimum of three orifice manometer settings, pass an exact quantity of gas through the wet-test meter and record the volume indicated by the dry gas meter. Also record the barometric pressure, the temperatures of the wet test meter, the inlet temperatures of the dry gas meter, and the temperatures of the outlet of the dry gas meter. Record all calibration data on a form similar to the one shown in Figure 5–5 of Method 5 of this appendix and calculate Y, the dry gas meter calibration factor, and ΔH@, the orifice calibration factor at each orifice setting. Allowable tolerances for Y and ΔH@ are given in Figure 5–6 of Method 5 of this appendix.

10.1.2 Estimating volumes for initial test runs. For a facility's initial test runs, the regulated facility must have a target or desired volume of gases to be sampled and a target range of volumes to use during the calibration of the dry gas meter. Use Equations 14A–1 and 14A–2 in section 12 of this method to derive the target dry gas meter volume (F_v) for these purposes.

10.1.3 Calibration of anemometers and temperature sensing devices. If the standard anemometers in Method 14 of this appendix are used, the calibration and integrity evaluations in sections 10.3.1.1 through 10.3.1.3 of Method 14 of this appendix shall be used as well as the recording device described in section 2.1.3 of Method 14. The calibrations or complete change-outs of anemometers shall take place at a minimum of once per year. The temperature sensing and recording devices shall be calibrated according to the manufacturer's specifications.

10.1.4 Calibration of flowmeters. The calibration of flowmeters is necessary to ensure that an equal volume of sampled gas is entering each of the individual cassettes and that no large differences, which could possibly bias the sample, exist between the cassettes.

10.1.4.1 Variable area, 65 mm flowmeters or equivalent shall be used. These flowmeters can be mounted on a common base for convenience. These flowmeters shall be calibrated by attaching a prepared cassette, complete with filters and pads, to the flowmeter and then to the system manifold. This manifold is an aluminum cylinder with valved inlets for connections to the flowmeters/cassettes and one outlet to a dry gas meter. The connection is then made to the wet-test meter and finally to a dry gas meter. All connections are made with tubing.

10.1.4.2 Turn the dry gas meter on for 15 min. in preparation for the calibration. Turn the dry gas meter off and plug the intake hole of the cassette. Turn the dry gas meter back on to evaluate the entire system for leaks. If the dry gas meter shows a leakage rate of less than 0.02 ft^3/min at 10 in. of Hg vacuum as noted on the dry gas meter, the system is acceptable to further calibration.

10.1.4.3 With the dry gas meter turned on and the flow indicator ball at a selected flow rate, record the exact amount of gas pulled through the flowmeter by taking measurements from the wet test meter after exactly 10 min. Record the room temperature and barometric pressure. Conduct this test for all flowmeters in the system with all flowmeters set at the same indicator ball reading. When all flowmeters have gone through the procedure above, correct the volume pulled through each flowmeter to standard conditions. The acceptable difference between the highest and lowest flowmeter rate is 5 percent. Should one or more flowmeters be outside of the acceptable limit of 5 percent, repeat the calibration procedure at a lower or higher indicator ball reading until all flowmeters show no more than 5 percent difference among them.

10.1.4.4 This flowmeter calibration shall be conducted at least once per year.

10.1.5 Miscellaneous equipment calibrations. Miscellaneous equipment used such as an automatic recorder/ printer used to measure dry gas meter temperatures shall be calibrated according to the manufacturer's specifications in order to maintain the accuracy of the equipment.

11.0 Analytical Procedure

11.1 The preferred primary analytical determination of the individual isolated samples or the combined particulate and gaseous samples shall be performed by an automated methodology. The analytical method for this technology shall be based on the manufacturer's instructions for equipment operation and shall also include the analysis of five standards with concentrations in the expected range of the actual samples. The results of the analysis of the five standards shall have a coefficient of correlation of at least 0.99. A check standard shall be analyzed as the last sample of the group to determine if instrument drift has occurred. The acceptable result for the check standard is 95 to 105 percent of the standard's true value.

11.2 The secondary analytical method shall be by specific ion electrode if the samples are distilled or if a TISAB IV buffer is used to eliminate aluminum interferences. Five standards with concentrations in the expected range of the actual samples shall be analyzed, and a coefficient of correlation of at least 0.99 is the minimum acceptable limit for linearity. An exception for this limit for

linearity is a condition when low-level standards in the range of 0.01 to 0.48 µg fluoride/ml are analyzed. In this situation, a minimum coefficient of correlation of 0.97 is required. TISAB II shall be used for low-level analyses.

12.0 *Data Analysis and Calculations*

12.1 Carry out calculations, retaining at least one extra decimal point beyond that of the acquired data. Round off values after the final calculation. Other forms of calculations may be used as long as they give equivalent results.

12.2 Estimating volumes for initial test runs.

$$F_v = \frac{(F_d)(X)}{F_e} \qquad \text{Eq. 14A-1}$$

Where

F_v = Desired volume of dry gas to be sampled, ft^3.

F_d = Desired or analytically optimum mass of TF per cassette, micrograms of TF per cassette (µg/cassette).

X = Number of cassettes used.

F_e = Typical concentration of TF in emissions to be sampled, $\mu g/ft^3$, calculated from Equation 14A–2.

$$F_e = \frac{(R_e)(R_p)(4.536\times10^8\,\mu g/lb)}{(A_r)(V_r)} \qquad \text{Eq. 14A-2}$$

Where

R_e = Typical emission rate from the facility, pounds of TF per ton (lb/ton) of aluminum.

R_p = Typical production rate of the facility, tons of aluminum per minute (ton/min).

V_r = Typical exit velocity of the roof monitor gases, feet per minute (ft/min).

A_r=Open area of the roof monitor, square feet (ft^2).

12.2.1 Example calculation. Assume that the typical emission rate (R_e) is 1.0 lb TF/ton of aluminum, the typical roof vent gas exit velocity (V_r) is 250 ft/min, the typical production rate (R_p) is 0.10 ton/min, the known open area for the roof monitor (A_r) is 8,700 ft^2, and the desired (analytically optimum) mass of TF per cassette is 1,500 µg. First calculate the concentration of TF per cassette (F_e) in $\mu g/ft^3$ using Equation 14A–2. Then calculate the desired volume of gas to be sampled (F_v) using Equation 14A–1.

$$F_e = 20.855 = \frac{(1.0\text{ lb/ton})(0.1\text{ tons/min})(4.536\times10^8\ \mu g/lb)}{(8{,}700\text{ ft}^2)(250\text{ ft/min})} \qquad \text{Eq. 14A-3}$$

$$F_v = 575.40\text{ ft}^3 = \frac{(1{,}500\ \mu g)(8\text{ cassettes})}{(20.855\ \mu g/\text{ft}^3)} \qquad \text{Eq. 14A-4}$$

This is a total of 575.40 ft^3 for eight cassettes or 71.925 ft^3/cassette.

12.3 Calculations of TF emissions from field and laboratory data that would yield a production related emission rate can be calculated as follows:

12.3.1 Obtain a standard cubic feet (scf) value for the volume pulled through the dry gas meter for all cassettes by using the field and calibration data and Equation 5–1 of Method 5 of this appendix.

12.3.2 Derive the average quantity of TF per cassette (in µg TF/cassette) by adding all

laboratory data for all cassettes and dividing this value by the total number of cassettes used. Divide this average TF value by the corrected dry gas meter volume for each cassette; this value then becomes TF_{std} (μg/ft³).

12.3.3 Calculate the production-based emission rate (R_e) in lb/ton using Equation 14A–5.

$$R_e = \frac{(TF_{std})(V_r)(A_r)(2.2\times10^{-9}\ \text{lb/}\mu\text{g})}{(R_p)} \qquad \text{Eq. 14A-5}$$

12.3.4 As an example calculation, assume eight cassettes located in a potline were used to sample for 72 hours during the run. The analysis of all eight cassettes yielded a total of 3,000 μg of TF. The dry gas meter volume was corrected to yield a total of 75 scf per cassette, which yields a value for TF_{std} of 3,000/75=5 μg/ft³. The open area of the roof monitor for the potline (A_r) is 17,400 ft². The exit velocity of the roof monitor gases (V_r) is 250 ft/min. The production rate of aluminum over the previous 720 hours was 5,000 tons, which is 6.94 tons/hr or 0.116 ton/min (R_p). Substituting these values into Equation 14A–5 yields:

$$R_e = \frac{(5\ \mu\text{g/ft}^3)(250\ \text{ft/min})(17{,}400\ \text{ft}^2)(2.2\times10^{-9}\ \text{lb/}\mu\text{g})}{(0.116\ \text{ton/min})} \qquad \text{Eq. 14A-6}$$

$$R_e = 0.41\ \text{lb/ton of aluminum produced.} \qquad \text{Eq. 14A-7}$$

12.4 Corrections to volumes due to leakage. Should the post-test leak check leakage rate exceed 4 percent as described in section 8.3.2 of this method, correct the volume as detailed in Case I in section 6.3 of Method 5 of this appendix.

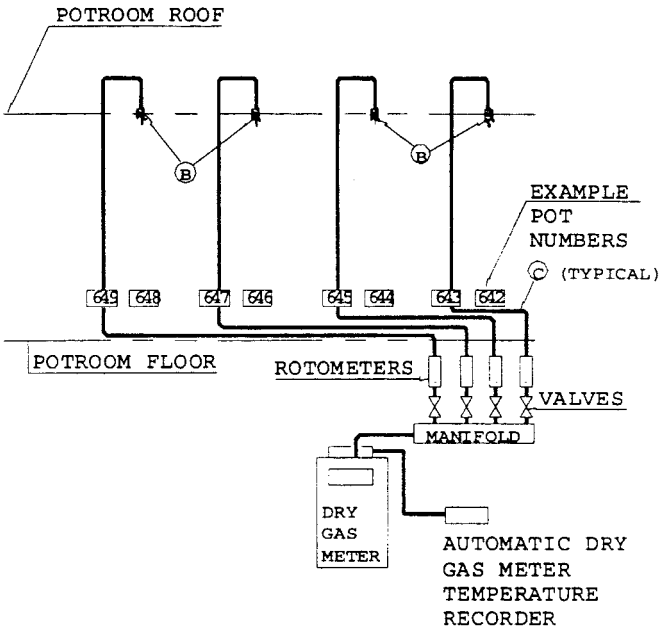

Ⓑ ALCAN CASSETTE EXAMPLE METHOD SAMPLING POINTS
Ⓒ POLYETHYLENE TUBING ENCLOSED IN CONDUIT

Figure 14A-1. Conceptual side view of arrangement of 4 cassettes for one-half of a potroom.

Note: This drawing does not reflect an equally acceptable arrangement of 8 cassettes in a cassette group located along at least 8 percent of the potroom roof.

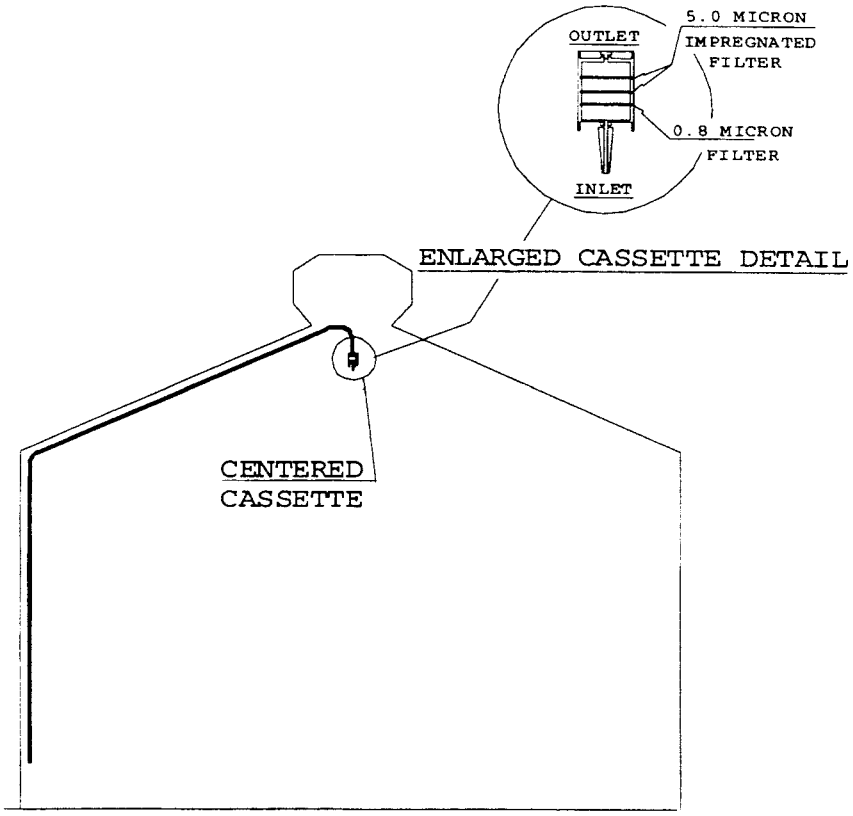

Figure 14A-2. Conceptual end view of cassette placement in a potroom roof.

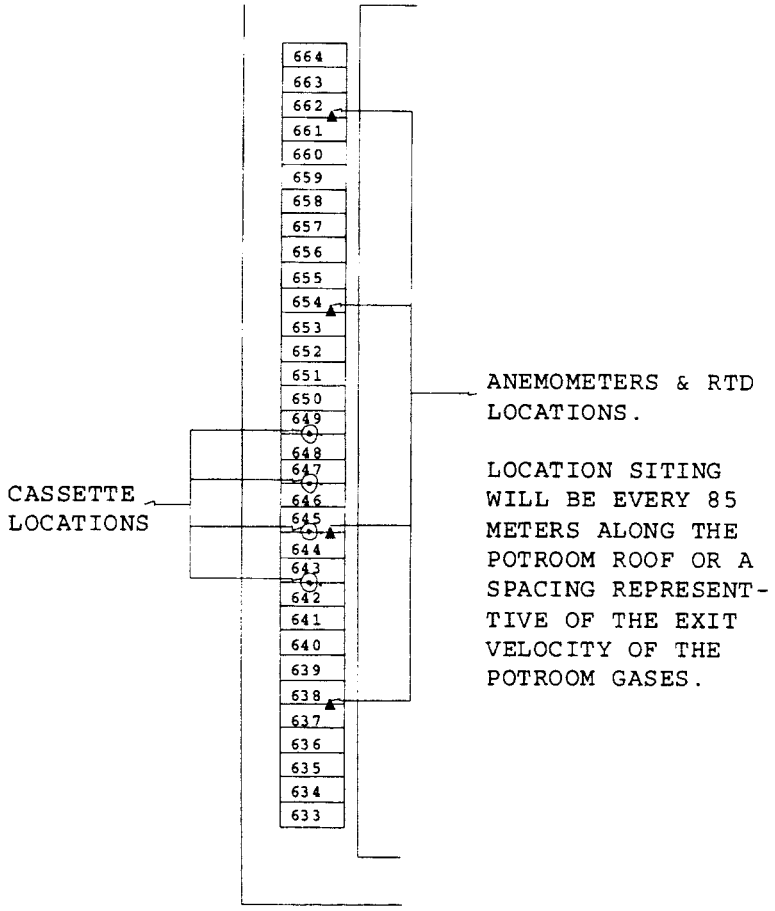

Figure 14A-3. Conceptual side view of positions of cassettes, anemometers, and RTDs in a typical half of a potroom.

Note: This drawing does not reflect other potentially acceptable arrangements.

METHOD 15—DETERMINATION OF HYDROGEN SULFIDE, CARBONYL SULFIDE, AND CARBON DISULFIDE EMISSIONS FROM STATIONARY SOURCES

Introduction

The method described below uses the principle of gas chromatographic separation and flame photometric detection (FPD). Since there are many systems or sets of operating conditions that represent useable methods of determining sulfur emissions, all systems which employ this principle, but differ only in details of equipment and operation, may be used as alternative methods, provided that the calibration precision and sample-line loss criteria are met.

1. *Principle and Applicability*

1.1 Principle. A gas sample is extracted from the emission source and diluted with clean dry air. An aliquot of the diluted sample is then analyzed for hydrogen sulfide (H_2S), carbonyl sulfide (COS), and carbon disulfide (CS_2) by gas chromatographic (GC) separation and flame photometric detection (FPD).

1.2 Applicability. This method is applicable for determination of the above sulfur compounds from tail gas control units of sulfur recovery plants.

2. *Range and Sensitivity*

2.1 Range. Coupled with a gas chromtographic system utilizing a 1-milliliter sample size, the maximum limit of the FPD for each sulfur compound is approximately 10 ppm. It may be necessary to dilute gas samples from sulfur recovery plants hundredfold (99:1) resulting in an upper limit of about 1000 ppm for each compound.

2.2 Sensitivity. The minimum detectable concentration of the FPD is also dependent on sample size and would be about 0.5 ppm for a 1 ml sample.

3. *Interferences*

3.1 Moisture Condensation. Moisture condensation in the sample delivery system, the analytical column, or the FPD burner block can cause losses or interferences. This potential is eliminated by heating the probe, filter box, and conncections, and by maintaining the SO_2 scrubber in an ice water bath. Moisture is removed in the SO_2 scrubber and heating the sample beyond this point is not necessary provided the ambient temperature is above 0 °C. Alternatively, moisture may be eliminated by heating the sample line, and by conditioning the sample with dry dilution air to lower its dew point below the operating temperature of the GC/FPD analytical system prior to analysis.

3.2 Carbon Monoxide and Carbon Dioxide. CO and CO_2 have substantial desensitizing effects on the flame photometric detector even after 9:1 dilution. (Acceptable systems must demonstrate that they have eliminated this interference by some procedure such as eluting CO and CO_2 before any of the sulfur compounds to be measured.) Compliance with this requirement can be demonstrated by submitting chromatograms of calibration gases with and without CO_2 in the diluent gas. The CO_2 level should be approximately 10 percent for the case with CO_2 present. The two chromatograms should show agreement within the precision limits of Section 4.1.

3.3 Elemental Sulfur. The condensation of sulfur vapor in the sampling system can lead to blockage of the particulate filter. This problem can be minimized by observing the filter for buildup and changing as needed.

3.4 Sulfur Dioxide (SO_2). Sulfur dioxide is not a specific interferent but may be present in such large amounts that it cannot be effectively separated from the other compounds of interest. The SO_2 scrubber described in Section 5.1.3 will effectively remove SO_2 from the sample.

3.5 Alkali Mist. Alkali mist in the emissions of some control devices may cause a rapid increase in the SO_2 scrubber pH to give low sample recoveries. Replacing the SO_2 scrubber contents after each run will minimize the chances of interference in these cases.

4. *Precision*

4.1 Calibration Precision. A series of three consecutive injections of the same calibration gas, at any dilution, shall produce results which do not vary by more than ±13 percent from the mean of the three injections.

4.2 Calibration Drift. The calibration drift determined from the mean of three injections made at the beginning and end of any run or series of runs within a 24-hour period shall not exceed ±5 percent.

5. *Apparatus*

5.1 Sampling (Figure 15–1).

5.1.1 Probe. The probe shall be made of Teflon or Teflon-lined stainless steel and heated to prevent moisture condensation. It shall be designed to allow calibration gas to enter the probe at or near the sample point entry. Any portion of the probe that contacts the stack gas must be heated to prevent moisture condensation. The probe described in Section 2.1.1 of Method 16A having a nozzle directed away from the gas stream is recommended for sources having particulate or mist emissions. Where very high stack temperatures prohibit the use of Teflon probe components, glass or quartz-lined probes may serve as substitutes.

NOTE.— Mention of trade names or specific products does not constitute an endorsement by the Environmental Protection Agency.

5.1.2 Particulate Filter. 50-mm Teflon filter holder and a 1- to 2-micron porosity Teflon filter (available through Savillex Corporation, 5325 Highway 101, Minnetonka, Minnesota 55343). The filter holder must be

maintained in a hot box at a temperature of at least 120°C (248°F).

5.1.3 SO_2 Scrubber.

5.1.3.1 Three 300-ml Teflon segment impingers connected in series with flexible, thick-walled, Teflon tubing. (Impinger parts and tubing available through Savillex.) The first two impingers contain 100 ml of citrate buffer, and the third impinger is initially dry. The tip of the tube inserted into the solution should be constricted to less than 3-mm (⅛-in.) ID and should be immersed to a depth of at least 5 cm (2 in.). Immerse the impingers in an ice water bath and maintain near 0°C. The scrubber solution will normally last for a 3-hour run before needing replacement. This will depend upon the effects of moisture and particulate matter on the solution strength and pH.

5.1.3.2 Connections between the probe, particulate filter, and $S0_2$ scrubber shall be made of Teflon and as short in length as possible. All portions of the probe, particulate filter, and connections prior to the $S0_2$ scrubber (or alternative point of moisture removal) shall be maintained at a temperature of at least 120 °C (248 °F).

5.1.4 Sample Line. Teflon, no greater than 1.3-cm (½-in.) ID. Alternative materials, such as virgin Nylon, may be used provided the line loss test is acceptable.

5.1.5 Sample Pump. The sample pump shall be a leakless Teflon-coated diaphragm type or equivalent.

5.2 Dilution System. The dilution system must be constructed such that all sample contacts are made of Teflon, glass, or stainless-steel. It must be capable of approximately a 9:1 dilution of the sample.

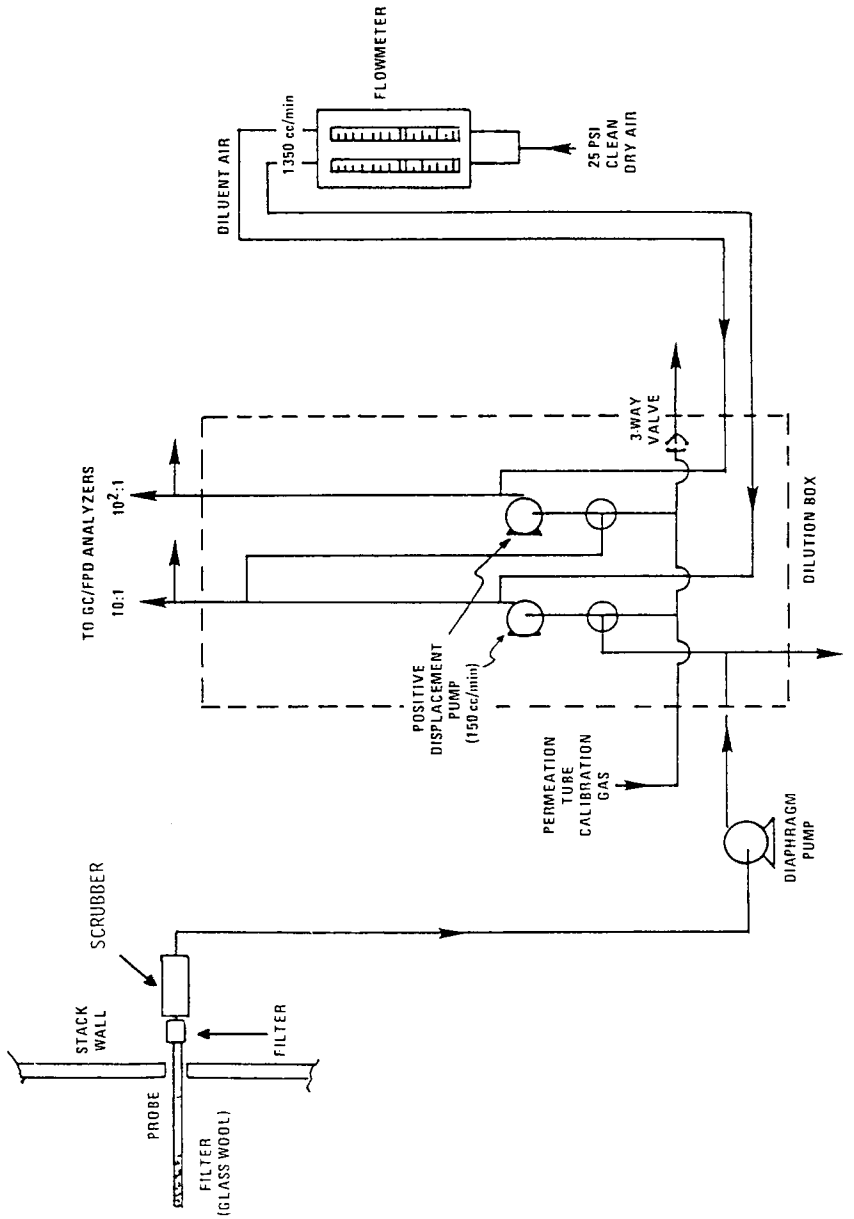

Figure 15-1. Sampling and dilution apparatus.

14a

5.3 Gas Chromatograph (Figure 15–2). The gas chromatograph must have at least the following components:

5.3.1 Oven. Capable of maintaining the separation column at the proper operating temperature ±1 °C.

5.3.2 Temperature Gauge. To monitor column oven, detector, and exhaust temperature ±1 °C.

5.3.3 Flow System. Gas metering system to measure sample, fuel, combustion gas, and carrier gas flows.

5.3.4 Flame Photometric Detector.

5.3.4.1 Electrometer. Capable of full scale amplification of linear ranges of 10^{-9} to 10^{-4}amperes full scale.

5.3.4.2 Power Supply. Capable of delivering up to 750 volts.

5.3.4.3 Recorder. Compatible with the output voltage range of the electrometer.

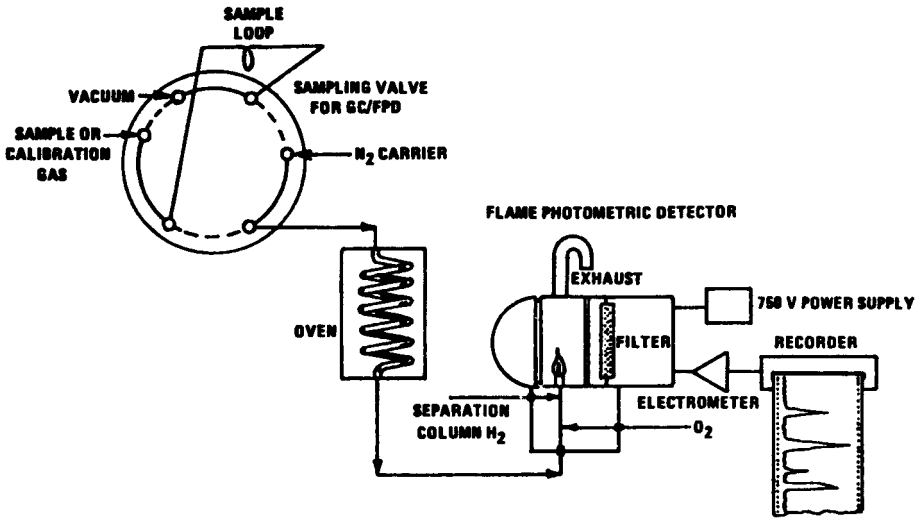

Figure 15-2. Gas chromatographic flame photometric analyzer.

5.3.4.4 Rotary Gas Valves. Multiport Teflon-lined valves equipped with sample loop. Sample loop volumes shall be chosen to provide the needed analytical range. Teflon tubing and fittings shall be used throughout to present an inert surface for sample gas. The gas chromatograph shall be calibrated with the sample loop used for sample analysis.

5.4 Gas Chromatograph Columns. The column system must be demonstrated to be capable of resolving three major reduced sulfur compounds: H_2S, COS, and CS_2.

To demonstrate that adequate resolution has been achieved the tester must submit a chromatogram of a calibration gas containing all three reduced sulfur compounds in the concentration range of the applicable standard. Adequate resolution will be defined as base line separation of adjacent peaks when the amplifier attenuation is set so that the smaller peak is at least 50 percent of full scale. Base line separation is defined as a return to zero ±5 percent in the interval between peaks. Systems not meeting this criteria may be considered alternate methods subject to the approval of the Administrator.

5.5 Calibration System (Figure 15–3). The calibration system must contain the following components.

5.5.1 Flow System. To measure air flow over permeation tubes within ±2 percent. Each flowmeter shall be calibrated after a complete test series with a wet-test meter. If the flow measuring device differs from the wet-test meter by more than 5 percent, the completed test shall be discarded. Alternatively, the tester may elect to use the flow data that will yield the lowest flow measurement. Calibration with a wet-test meter before a test is optional. Flow over the permeation device may also be determined using a soap bubble flowmeter.

5.5.2 Constant Temperature Bath. Device capable of maintaining the permeation tubes at the calibration temperature within 0.1 °C.

5.5.3 Temperature Gauge. Thermometer or equivalent to monitor bath temperature within 0.1 °C.

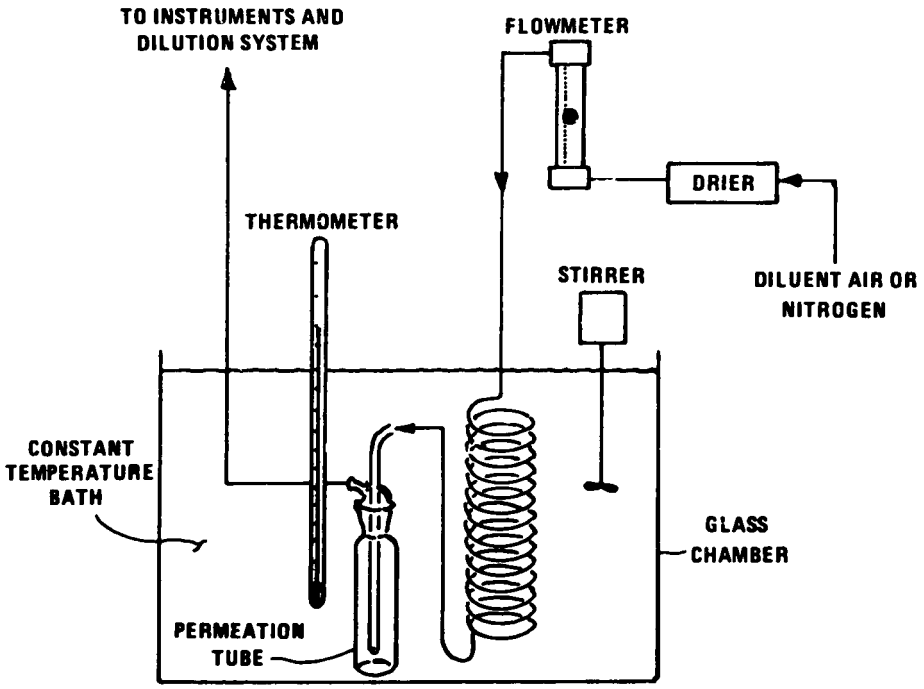

Figure 15-3. Apparatus for field calibration.

6. *Reagents*

6.1 Fuel. Hydrogen (H_2) prepurified grade or better.

6.2 Combustion Gas. Oxygen (O_2) or air, research purity or better.

6.3 Carrier Gas. Prepurified grade or better.

6.4 Diluent. Air containing less than 0.5 ppm total sulfur compounds and less than 10 ppm each of moisture and total hydrocarbons.

6.5 Calibration Gases. Permeation tubes, one each of H_2S, COS, and CS_2, gravimetrically calibrated and certified at some convenient operating temperature. These tubes consist of hermetically sealed FEP Teflon tubing in which a liquified gaseous substance is enclosed. The enclosed gas permeates through the tubing wall at a constant rate. When the temperature is constant, calibration gases covering a wide range of known concentrations can be generated by varying and accurately measuring the flow rate of diluent gas passing over the tubes. These calibration gases are used to calibrate the GC/FPD system and the dilution system.

6.6 Citrate Buffer. Dissolve 300 g of potassium citrate and 41 g of anhydrous citric acid in 1 liter of water. Alternatively, 284 g of sodium citrate may be substituted for the potassium citrate. Adjust the pH to between 5.4 and 5.6 with potassium citrate or citric acid, as required.

6.7 Sample Line Loss Gas (Optional). As an alternative, H_2S cylinder gas may be used for the sample line loss test. The gas shall be calibrated against permeation devices having known permeation rates or by the procedure in Section 7 of Method 16A.

7. *Pretest Procedures*

The following procedures are optional but would be helpful in preventing any problem which might occur later and invalidate the entire test.

7.1 After the complete measurement system has been set up at the site and deemed to be operational, the following procedures should be completed before sampling is initiated.

7.1.1 Leak Test. Appropriate leak test procedures should be employed to verify the integrity of all components, sample lines, and connections. The following leak test procedure is suggested: For components upstream of the sample pump, attach the probe end of

the sample line to a manometer or vacuum gauge, start the pump and pull greater than 50 mm (2 in.) Hg vacuum, close off the pump outlet, and then stop the pump and ascertain that there is no leak for 1 minute. For components after the pump, apply a slight positive pressure and check for leaks by applying a liquid (detergent in water, for example) at each joint. Bubbling indicates the presence of a leak. As an alternative to the initial leak-test, the sample line loss test described in Section 10.1 may be performed to verify the integrity of components.

7.1.2 System Performance. Since the complete system is calibrated following each test, the precise calibration of each component is not critical. However, these components should be verified to be operating properly. This verification can be performed by observing the response of flowmeters or of the GC output to changes in flow rates or calibration gas concentrations and ascertaining the response to be within predicted limits. If any component or the complete system fails to respond in a normal and predictable manner, the source of the discrepancy should be identified and corrected before proceeding.

8. *Calibration*

Prior to any sampling run, calibrate the system using the following procedures. (If more than one run is performed during any 24-hour period, a calibration need not be performed prior to the second and any subsequent runs. The calibration must, however, be verified as prescribed in Section 10, after the last run made within the 24-hour period.)

8.1 General Considerations. This section outlines steps to be followed for use of the GC/FPD and the dilution system. The procedure does not include detailed instructions because the operation of these systems is complex, and it requires an understanding of the individual system being used. Each system should include a written operating manual describing in detail the operating procedures associated with each component in the measurement system. In addition, the operator should be familiar with the operating principles of the components; particularly the GC/FPD. The citations in the Bibliography at the end of this method are recommended for review for this purpose.

8.2 Calibration Procedure. Insert the permeation tubes into the tube chamber. Check the bath temperature to assure agreement with the calibration temperature of the tubes within ±0.1 °C. Allow 24 hours for the tubes to equilibrate. Alternatively equilibration may be verified by injecting samples of calibration gas at 1-hour intervals. The permeation tubes can be assumed to have reached equilibrium when consecutive hourly samples agree within the precision limits of Section 4.1.

Vary the amount of air flowing over the tubes to produce the desired concentrations for calibrating the analytical and dilution systems. The air flow across the tubes must at all times exceed the flow requirement of the analytical systems. The concentration in parts per million generated by a tube containing a specific permeant can be calculated as follows:

$$C = K \times P_r / ML \qquad \text{Eq. 15–1}$$

Where:

C=Concentration of permeant produced in ppm.

P_r=Permeation rate of the tube in µg/min.

M=Molecular weight of the permeant: g/g-mole.

L=Flow rate, l/min, of air over permeant @ 20 °C, 760 mm Hg.

K=Gas constant at 20 °C and 760 mm Hg=24.04 l/g mole.

8.3 Calibration of Analysis System. Generate a series of three or more known concentrations spanning the linear range of the FPD (approximately 0.5 to 10 ppm for a 1—ml sample) for each of the three major sulfur compounds. Bypassing the dilution system, inject these standards into the GC/FPD analyzers and monitor the responses. Three injects for each concentration must yield the precision described in Section 4.1. Failure to attain this precision is an indication of a problem in the calibration or analytical system. Any such problem must be identified and corrected before proceeding.

8.4 Calibration Curves. Plot the GC/FPD response in current (amperes) versus their causative concentrations in ppm on log-log coordinate graph paper for each sulfur compound. Alternatively, a least squares equation may be generated from the calibration data. Alternatively, a least squares equation may be generated from the calibration data using concentrations versus the appropriate instrument response units.

8.5 Calibration of Dilution System. Generate a known concentration of hydrogen sulfied using the permeation tube system. Adjust the flow rate of diluent air for the first dilution stage so that the desired level of dilution is approximated. Inject the diluted calibration gas into the GC/FPD system and monitor its response. Three injections for each dilution must yield the precision described in Section 4.1. Failure to attain this precision in this step is an indication of a problem in the dilution system. Any such problem must be identified and corrected before proceeding. Using the calibration data for H_2S (developed under 8.3) determine the diluted calibration gas concentration in ppm. Then calculate the dilution factor as the ratio of the calibration gas concentration before dilution to the diluted calibration gas concentration determined under this section. Repeat this procedure for

each stage of dilution required. Alternatively, the GC/FPD system may be calibrated by generating a series of three or more concentrations of each sulfur compound and diluting these samples before injecting them into the GC/FPD system. This data will then serve as the calibration data for the unknown samples and a separate determination of the dilution factor will not be necessary. However, the precision requirements of Section 4.1 are still applicable.

9. *Sampling and Analysis Procedure*

9.1 Sampling. Insert the sampling probe into the test port making certain that no dilution air enters the stack through the port. Begin sampling and dilute the sample approximately 9:1 using the dilution system. Note that the precise dilution factor is that which is determined in section 8.5. Condition the entire system with sample for a minimum of 15 minutes prior to commencing analysis.

9.2 Analysis. Aliquots of diluted sample are injected into the GC/FPD analyzer for analysis.

9.2.1 Sample Run. A sample run is composed of 16 individual analyses (injects) performed over a period of not less than 3 hours or more than 6 hours.

9.2.2 Observation for Clogging of Probe or Filter. If reductions in sample concentrations are observed during a sample run that cannot be explained by process conditions, the sampling must be interrupted to determine if the probe or filter is clogged with particulate matter. If either is found to be clogged, the test must be stopped and the results up to that point discarded. Testing may resume after cleaning or replacing the probe and filter. After each run, the probe and filter shall be inspected and, if necessary, replaced.

10. *Post-Test Procedures*

10.1 Sample Line Loss. A known concentration of hydrogen sulfide at the level of the applicable standard, ±20 percent, must be introduced into the sampling system at the opening of the probe in sufficient quantities to ensure that there is an excess of sample which must be vented to the atmosphere. The sample must be transported through the entire sampling system to the measurement system in the normal manner. The resulting measured concentration should be compared to the known value to determine the sampling system loss. A sampling system loss of more than 20 percent is unacceptable. Sampling losses of 0–20 percent must be corrected by dividing the resulting sample concentration by the fraction of recovery. The known gas sample may be generated using permeation tubes. Alternatively, cylinders of hydrogen sulfide mixed in nitrogen and verified according to Section 6.7 may be used. The optional pretest procedures provide a good guideline for determining if there are leaks in the sampling system.

10.2 Recalibration. After each run, or after a series of runs made within a 24-hour period, perform a partial recalibration using the procedures in Section 8. Only H_2S (or other permeant) need be used to recalibrate the GC/FPD analysis system (8.3) and the dilution system (8.5).

10.3 Determination of Calibration Drift. Compare the calibration curves obtained prior to the runs, to the calibration curves obtained under Section 10.2. The calibration drift should not exceed the limits set forth in Section 4.2. If the drift exceeds this limit, the intervening run or runs should be considered not valid. The tester, however, may instead have the option of choosing the calibration data set which would give the highest sample values.

11. *Calculations*

11.1 Determine the concentrations of each reduced sulfur compound detected directly from the calibration curves. Alternatively, the concentrations may be calculated using the equation for the least squares line.

11.2 Calculation of SO_2 Equivalent. SO_2 equivalent will be determined for each analysis made by summing the concentrations of each reduced sulfur compound resolved during the given analysis.

SO_2 equivalent=$\Sigma(H_2S, COS, 2\ CS_2)d$

Eq. 15–2

Where:

SO_2 equivalent=The sum of the concentration of each of the measured compounds (COS, H_2S, CS_2) expressed as sulfur dioxide in ppm.

H_2S=Hydrogen sulfide, ppm.

COS=Carbonyl sulfide, ppm.

CS_2=Carbon disulfide, ppm.

d=Dilution factor, dimensionless.

11.3 Average SO_2 Equivalent. This is determined using the following equation. Systems that do not remove moisture from the sample but conditions the gas to prevent condensation must correct the average SO_2 equivalent for the fraction of water vapor present.

$$\text{Average } SO_2 \text{ equivalent} = \frac{\sum_{i=1}^{N} SO_2 \text{ equiv}_i}{N}$$

Eq. 15-3

where:

Average SO_2 equivalent = Average SO_2 equivalent in ppm, dry basis.

Average SO_2 equivalent $_i$ = SO_2 in ppm as determined by Equation 15–2.

N = Number of analyses performed.

12. *Bibliography*

12.1 O'Keeffe, A. E. and G. C. Ortman. ''Primary Standards for Trace Gas Analysis.'' Anal. Chem. 38,760 (1966).

12.2 Stevens, R. K., A. E. O'Keeffe, and G. C. Ortman. ''Absolute Calibration of a Flame Photometric Detector to Volatile Sulfur Compounds at Sub-Part-Per-Million Levels.'' Environmental Science and Technology 3:7 (July 1969).

12.3 Mulik, J. D., R. K. Stevens, and R. Baumgardner. ''An Analytical System Designed to Measure Multiple Malodorous Compounds Related to Kraft Mill Activities.'' Presented at the 12th Conference on Methods in Air Pollution and Industrial Hygiene Studies, University of Southern California, Los Angeles, CA, April 6–8, 1971.

12.4 Devonald, R. H., R. S. Serenius, and A. D. McIntyre. ''Evaluation of the Flame Photometric Detector for Analysis of Sulfur Compounds.'' Pulp and Paper Magazine of Canada, 73,3 (March, 1972).

12.5 Grimley, K. W., W. S. Smith, and R. M. Martin. ''The Use of a Dynamic Dilution System in the Conditioning of Stack Gases for Automated Analysis by a Mobile Sampling Van.'' Presented at the 63rd Annual APCA Meeting in St. Louis, MO. June 14–19, 1970.

12.6 General Reference. Standard Methods of Chemical Analysis Volume III A and B Instrumental Methods. Sixth Edition. Van Nostrand Reinhold Co.

METHOD 15A—DETERMINATION OF TOTAL REDUCED SULFUR EMISSIONS FROM SULFUR RECOVERY PLANTS IN PETROLEUM REFINERIES

1. *Applicability, Principle, Interferences, Precision, and Bias*

1.1 Applicability. This method is applicable to the determination of total reduced sulfur (TRS) emissions from sulfur recovery plants where the emissions are in a reducing atmosphere, such as in Stretford units. The lower detectable limit is 0.1 ppm of sulfur dioxide (SO_2) when sampling at 2 liters/min for 3 hours or 0.3 ppm when sampling at 2 liters/min for 1 hour. The upper concentration limit of the method exceeds TRS levels generally encountered in sulfur recovery plants.

1.2 Principle. An integrated gas sample is extracted from the stack, and combustion air is added to the oxygen (O_2)-deficient gas at a known rate. The TRS compounds (hydrogen sulfide, carbonyl sulfide, and carbon disulfide) are thermally oxidized to sulfur dioxide, collected in hydrogen peroxide as sulfate ion, and then analyzed according to the Method 6 barium-thorin titration procedure.

1.3 Interferences. Reduced sulfur compounds, other than TRS, that are present in the emissions will also be oxidized to SO_2. For example, thiophene has been identified in emissions from a Stretford unit and produced a positive bias of 30 percent in the Method 15A result. However, these biases may not affect the outcome of the test at units where emissions are low relative to the standard.

Calcium and aluminum have been shown to interfere in the Method 6 titration procedure. Since these metals have been identified in particulate matter emissions from Stretford units, a Teflon filter is required to remove this interference.

NOTE: Mention of trade name or commercial products in this publication does not constitute the endorsement or recommendation for use by the Environmental Protection Agency.

When used to sample emissions containing 7 percent moisture or less, the midget impingers have sufficient volume to contain the condensate collected during sampling. Dilution of the H_2O_2 does not affect the collection of SO_2. At higher moisture contents, the potassium citrate-citric acid buffer system used with Method 16A should be used to collect the condensate.

1.4 Precision and bias. Relative standard deviations of 2.8 and 6.9 percent at 41 ppm TRS have been obtained when sampling for 1 and 3 hours, respectively. Results obtained with this method are likely to contain a positive bias due to the presence of nonregulated sulfur compounds (that are present in petroleum) in the emissions.

2. *Apparatus*

2.1 Sampling. The sampling train is shown in Figure 15A–1, and component parts are discussed below. Modifications to this sampling train are acceptable provided that the system performance check is met.

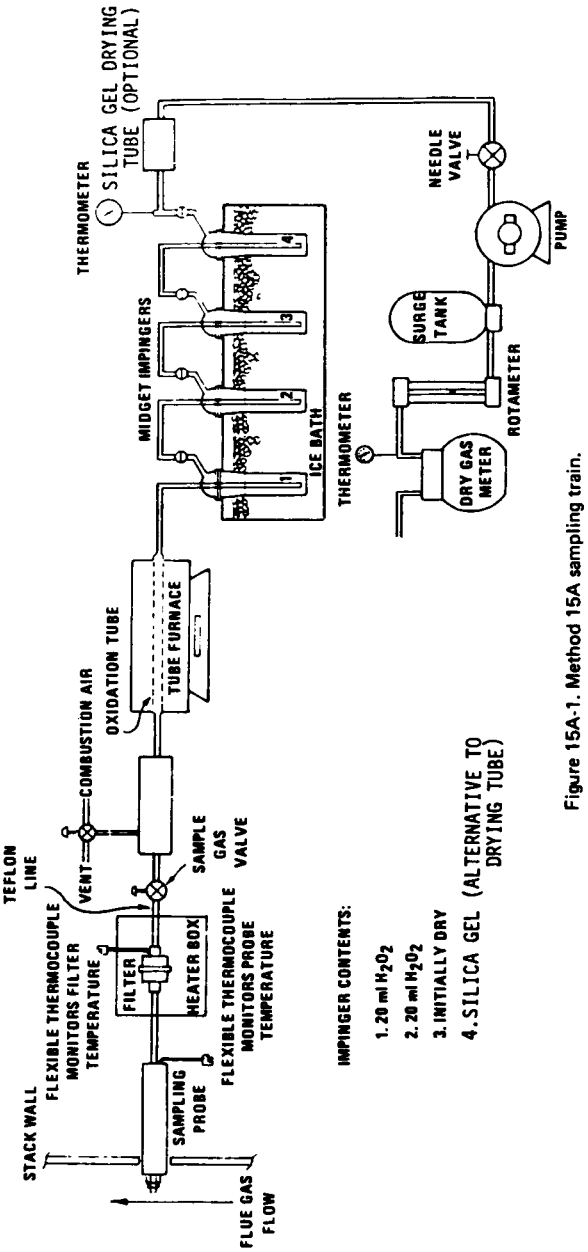

Figure 15A-1. Method 15A sampling train.

2.1.1 Probe. 0.6-cm (¼-in.) OD Teflon tubing sequentially wrapped with heat-resistant fiber strips, a rubberized heating tape (with a plug at one end), and heat-resistant adhesive tape. A flexible thermocouple or some other suitable temperature-measuring device shall be placed between the Teflon tubing and the fiber strips so that the temperature

can be monitored. The probe should be sheathed in stainless steel to provide in-stack rigidity. A series of bored-out stainless steel fittings placed at the front of the sheath will prevent flue gas from entering between the probe and sheath. The sampling probe is depicted in Figure 15A–2.

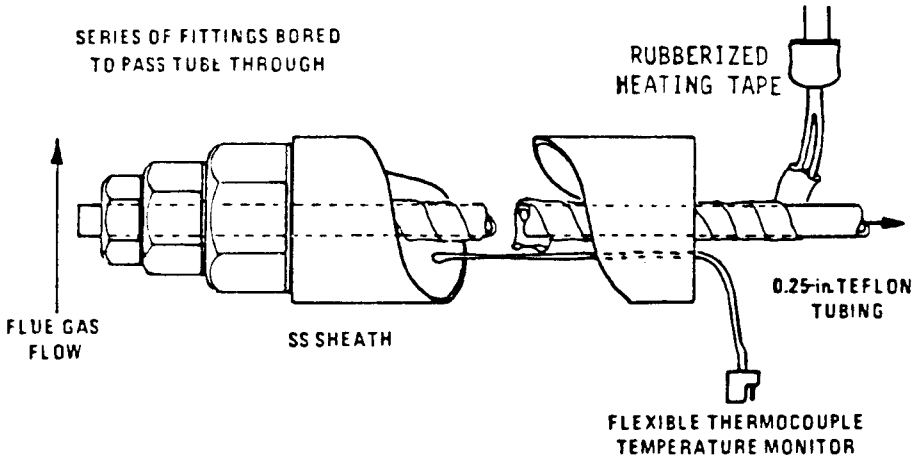

Figure 15A–2. Method 15A sampling probe.

2.1.2 Particulate filter. A 50-mm Teflon filter holder and a 1- to 2-μm porosity Teflon filter (available through Savillex Corporation, 5325 Highway 101, Minnetonka, Minnesota 55345). The filter holder must be maintained in a hot box at a high enough temperature to prevent condensation.

2.1.3 Combustion air delivery system. As shown in the schematic diagram in Figure 15A–3. The rotameter should be selected to measure an air flow rate of 0.5 liter/min.

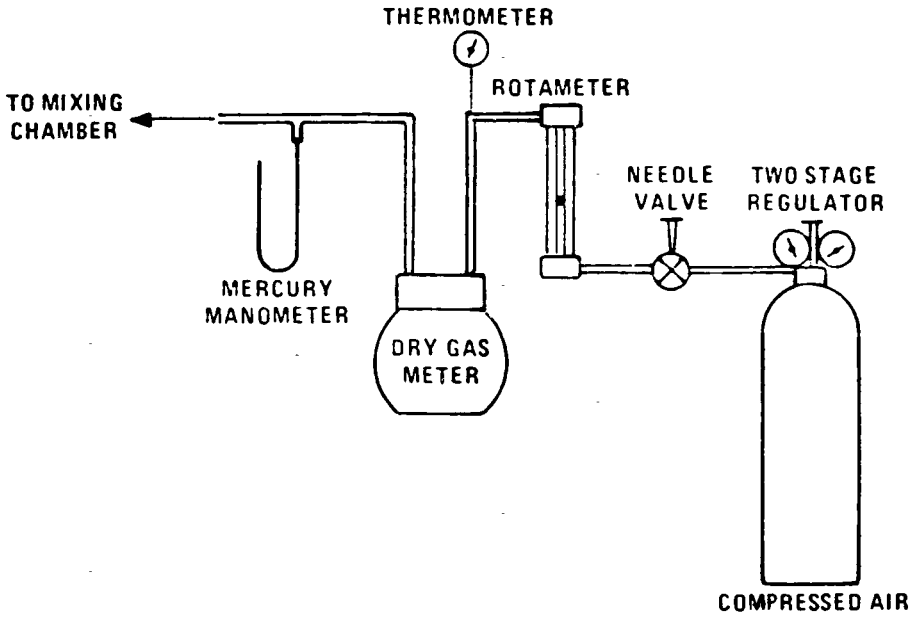

Figure 15A-3. Combustion air delivery system.

2.1.4 Combustion tube. Quartz glass tubing with an expanded combustion chamber 2.54 cm (1 in.) in diameter and at least 30.5 cm (12 in.) long. The tube ends should have an outside diameter of 0.6 cm (¼ in.) and be at least 15.3 cm (6 in.) long. This length is necessary to maintain the quartz-glass connector at ambient temperature and thereby avoid leaks. Alternatively, the outlet may be constructed with a 90-degree glass elbow and socket that would fit directly onto the inlet of the first peroxide impinger.

2.1.5 Furnace. Of sufficient size to enclose the combustion tube. The furnace shall have a temperature regulator capable of maintaining the temperature at 1100 ± 50°C. The furnace operating temperature shall be checked with a thermocouple to ensure accuracy. Lindberg furnaces have been found to be satisfactory.

2.1.6 Peroxide impingers, stopcock grease, thermometer, drying tube, valve, pump, barometer, and vacuum gauge. Same as in Method 6, Sections 2.1.2, 2.1.4, 2.1.5, 2.1.6, 2.1.7, 2.1.8, 2.1.11, and 2.1.12, respectively.

2.1.7 Rate meters. Rotameters (or equivalent) capable of measuring flow rate to within 5 percent of the selected flow rate and calibrated as in Section 5.2.

2.1.8 Volume meter. Dry gas meter capable of measuring the sample volume under the particular sampling conditions with an accuracy of ± 2 percent.

2.1.9 U-tube manometer. To measure the pressure at the exit of the combustion gas dry gas meter.

2.2 Sample recovery and analysis. Same as in Method 6, Sections 2.2 and 2.3, except a 10-ml buret with 0.05-ml graduations is required for titrant volumes of less than 10.0 ml, and the spectrophotometer is not needed.

3. *Reagents*

Unless otherwise indicated, all reagents must conform to the specifications established by the Committee on Analytical Reagents of the American Chemical Society. When such specifications are not available, the best available grade shall be used.

3.1 Sampling. The following reagents are needed:

3.1.1 Water. Same as in Method 6, Section 3.1.1.

3.1.2 Hydrogen peroxide, 3 percent. Same as in Method 6, Section 3.1.5 (40 ml is needed per sample).

3.1.3 Recovery check gas. Carbonyl sulfide (COS) in nitrogen (100 ppm or greater, if necessary) in an aluminum cylinder. Verify the

concentration by gas chromatography where the instrument is calibrated with a COS permeation tube.

3.1.4 Combustion gas. Air, contained in a gas cylinder equipped with a two-stage regulator. The gas should contain less than 50 ppb of reduced sulfur compounds and less than 10 ppm total hydrocarbons.

3.2 Sample recovery and analysis. Same as in Method 6, Sections 3.2 and 3.3.

4. *Procedure*

4.1 Sampling. Before any source sampling is done, conduct two 30-minute system performance checks in the field, as detailed in Section 4.3, to validate the sampling train components and procedures (optional).

4.1.1 Preparation of sampling train. For the Method 6 part of the train, measure 20 ml of 3 percent hydrogen peroxide into the first and second midget impingers. Leave the third midget impinger empty and add silica gel to the fourth impinger. Alternatively, a silica gel drying tube may be used in place of the fourth impinger. Place crushed ice and water around all impingers. Maintain the oxidation furnace at 1100 ± 50°C to ensure 100 percent oxidation of COS. Maintain the probe and filter temperatures at a high enough level (no visible condensation) to prevent moisture condensation and monitor the temperatures with a thermocouple.

4.1.2 Leak-check procedure. Assemble the sampling train and leak-check as described in Method 6, Section 4.1.2. Include the combustion air delivery system from the needle valve forward in the leak-check.

4.1.3 Sample collection. Adjust the pressure on the second stage of the regulator on the combustion air cylinder to 10 psig. Adjust the combustion air flow rate to 0.50 liter/min (±10 percent) before injecting combustion air into the sampling train. Then inject combustion air into the sampling train, start the sample pump, and open the stack sample gas valve. Carry out these three operations within 15 to 30 seconds to avoid pressurizing the sampling train. Adjust the total sample flow rate to 2.0 liters/min (±10 percent). The combustion air flow rate of 0.50 liter/min and the total sample flow rate of 2.0 liters/min produce an 0_2 concentration of 5.0 percent in the stack gas. This 0_2 concentration must be maintained constantly to allow oxidation of TRS to SO_2. Adjust these flow rates during sampling as necessary. Monitor and record the combustion air manometer reading at regular intervals during the sampling period. Sample for 1 or 3 hours. At the end of sampling, turn off the sample pump and combustion air simultaneously (within 15 to 30 seconds of each other). All other procedures are the same as in Method 6, Section 4.1.3, except that the sampling train should not be purged. After collecting the sample, remove the probe from the stack and conduct a leak-check (mandatory).

After each 3-hour test run (or after three 1-hour samples), conduct one system performance check (see Section 4.3). After this system performance check and before the next test run, it is recommended that the probe be rinsed and brushed and the filter replaced.

In Method 15, a test run is composed of 16 individual analyses (injects) performed over a period of not less than 3 hours or more than 6 hours. For Method 15A to be consistent with Method 15, the following may be used to obtain a test run: (1) Collect three 60-minute samples or (2) collect one 3-hour sample. (Three test runs constitute a test.)

4.2 Sample recovery. Recover the hydrogen peroxide-containing impingers as detailed in Method 6, Section 4.2.

4.3 System performance check. A system performance check is done (1) to validate the sampling train components and procedure (before testing, optional) and (2) to validate a test run (after a run). Perform a check in the field before testing consisting of at least two samples (optional), and perform an additional check after each 3-hour run or after three 1-hour samples (mandatory).

The checks involve sampling a known concentration of COS and comparing the analyzed concentration with the known concentration. Mix the recovery gas with N_2 as shown in Figure 15A–4 if dilution is required. Adjust the flow rates to generate a COS concentration in the range of the stack gas or within 20 percent of the applicable standard at a total flow rate of at least 2.5 liters/min. Use Equation 15A–4 to calculate the concentration of recovery gas generated. Calibrate the flow rate from both sources with a soap bubble flow tube so that the diluted concentration of COS can be accurately calculated. Collect 30-minute samples, and analyze in the normal manner. Collect the samples through the probe of the sampling train using a manifold or some other suitable device that will ensure extraction of a representative sample.

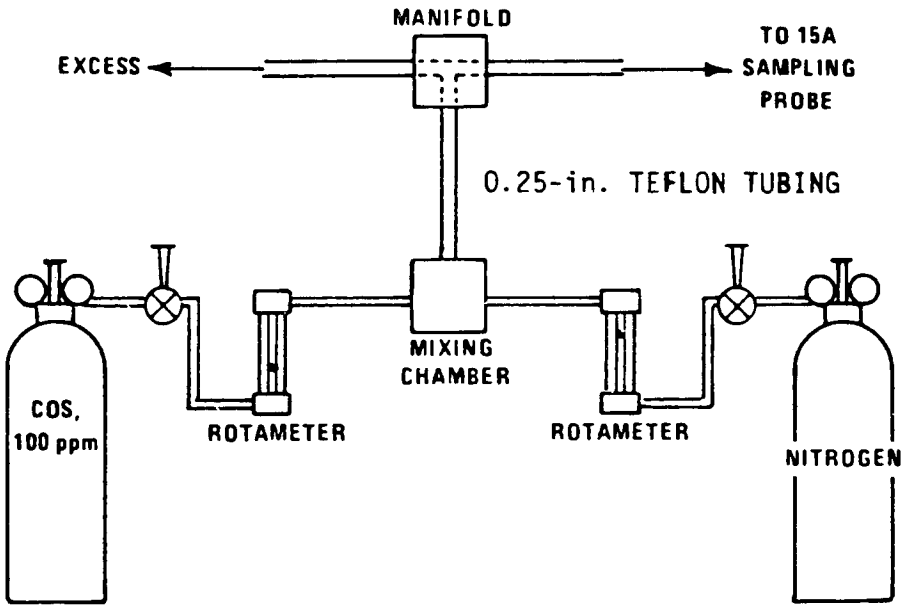

Figure 15A–4. COS recovery gas generator system.

The recovery check must be performed in the field before replacing the particulate filter and before cleaning the probe. A sample recovery of 100 ± 20 percent must be obtained for the data to be valid and should be reported with the emission data, but should not be used to correct the data. However, if the performance check results do not affect the compliance or noncompliance status of the affected facility, the Administrator may decide to accept the results of the compliance test. Use Equation 15A–5 to calculate the recovery efficiency.

4.4 Sample analysis. Same as in Method 6, Section 4.3. For compliance tests only, an EPA SO_2 field audit sample shall be analyzed with each set of samples. Such audit samples are available from the Quality Assurance Division, Environmental Monitoring Systems Laboratory, U.S. Environmental Protection Agency, Research Triangle Park, NC 27711.

5. *Calibration.*

5.1 Metering system, thermometers, barometer, and barium perchlorate solution. Calibration procedures are presented in Method 6, Sections 5.1, 5.2, 5.4, and 5.5.

5.2 Rotameters. Calibrate with a bubble flow tube.

6. *Calculations.*

In the calculations, retain at least one extra decimal figure beyond that of the acquired data. Round off figures after final calculations.

6.1 Nomenclature.

C_{TRS}=Concentration of TRS as SO_2, dry basis, corrected to standard conditions, ppm.

N=Normality of barium perchlorate titrant, milliequivalents/ml.

P_{bar}=Barometric pressure at exit orifice of the dry gas meter, mm Hg.

P_{std}=Standard absolute pressure, 760 mm Hg.

T_m=Average dry gas meter absolute temperature, °.

T_{std}=Standard absolute temperature, 293°.

V_a=Volume of sample aliquot titrated, ml.

V_{ms}=Dry gas volume as measured by the sample train dry gas meter, liters.

V_{mc}=Dry gas volume as measured by the combustion air dry gas meter, liters.

$V_{ms(std)}$=Dry gas volume measured by the sample train dry gas meter, corrected to standard conditions, liters.

$V_{mc(std)}$=Dry gas volume measured by the combustion air dry gas meter, corrected to standard conditions, liters.

V_{soln}=Total volume of solution in which the sulfur dioxide sample is contained, 100 ml.
V_t=Volume of barium perchlorate titrant used for the sample (average of replicate titrations), ml.
V_{tb}=Volume of barium perchlorate titrant used for the blank, ml.
Y=Calibration factor for sampling train dry gas meter.
Yc=Calibration factor for combustion air dry gas meter.
C_{RG}=Concentration of generated recovery gas, ppm.
C_{COS}=Concentration of COS recovery gas, ppm.
Q_{COS}=Flow rate of COS recovery gas, liters/min.
Q_{N2}=Flow rate of diluent N_2, liters/min.
R=Recovery efficiency for the system performance check, percent.
32.03=Equivalent weight of sulfur dioxide, mg/meq.

$$12025\frac{\mu l}{meq}=\frac{(32.03mg)}{(meq)}\frac{(24.05\,liters)}{(mole)}\frac{(mole)(1g)(10^3\,ml)(10^3\,\mu l)}{(64.06\,g)(10^3\,g)(liter)(ml)}$$

6.2 Dry Sample Gas Volume, Corrected to Standard Conditions.

$$V_{ms(std)}=\frac{V_{ms}Y(T_{std})(P_{bar})}{(T_m)(P_{std})}=\frac{K_1Y(V_m)(P_{bar})}{T_m}\qquad \text{Eq. 15A-1}$$

where: K_1=0.3858°K/mm Hg for metric units.

6.3 Combustion Air Gas Volume, Gorrected to Standard Conditions.

$$V_{mc(std)}=\frac{k_1Y_c(V_{mc})(P_{bar})}{T_m}\qquad \text{Eq. 15A-2}$$

NOTE: Correct P_{bar} for the average pressure of the manometer during the sampling period.

6.4 Concentration of TRS as ppm SO_2.

$$C_{TRS}=\frac{K_2(V_t-V_{tb})N(V_{soln}/V_a)}{V_{ms(std)}-V_{mc(std)}}\qquad \text{Eq. 15A-3}$$

where: K_2=12025 µl/meq for metric units.

6.5 Concentration of Generated Recovery Gas.

$$C_{RG}=\frac{(C_{COS})(Q_{COS})}{Q_{COS}+Q_{N2}}\qquad \text{Eq. 15A-4}$$

6.6 Recovery Efficiency.

$$R=\frac{C_{TRS}}{C_{RG}}\times 100\qquad \text{Eq. 15A-5}$$

7. *Bibliography*

1. *American Society for Testing and Materials* Annual Book of ASTM Standards. Part 31: Water, Atmospheric Analysis. Philadelphia, Pennsylvania. 1974. p. 40–42.

2. *Blosser, R.O., H.S. Oglesby, and A.K. Jain* A Study of Alternate SO_2 Scrubber Designs Used for TRS Monitoring. National Council of the Paper Industry for Air and Stream Improvement, Inc., New York, New York. Special Report 77–05. July 1977.

3. *Curtis, F., and G.D. McAlister* Development and Evaluation of an Oxidation/Method 6 TRS Emission Sampling Procedure. Emission Measurement Branch, Emission Standards and Engineering Division, U.S. Environmental Protection Agency,

Research Triangle Park, North Carolina 27711. February 1980.

4. *Gellman, I.*

A Laboratory and Field Study of Reduced Sulfur Sampling and Monitoring Systems.

National Council of the Paper Industry for Air and Stream Improvement, Inc., New York, New York. Atmospheric Quality Improvement Technical Bulletin No. 81. October 1975.

5. *Margeson, J.H., J.E. Knoll, M.R. Midgett, B.B. Ferguson, and P.J. Schworer*

A Manual Method for TRS Determination. Journal of Air Pollution Control Association. *35:*1280–1286. December 1985.

METHOD 16—SEMICONTINUOUS DETERMINATION OF SULFUR EMISSIONS FROM STATIONARY SOURCES

Introduction

The method described below uses the principle of gas chromatographic separation and flame photometric detection (FPD). Since there are many systems or sets of operating conditions that represent useable methods of determining sulfur emissions, all systems which employ this principle, but differ only in details of equipment and operation, may be used as alternative methods, provided that the calibration precision and sample line loss criteria are met.

1. *Principle and Applicability*

1.1 Principle. A gas sample is extracted from the emission source and an aliquot is analyzed for hydrogen sulfide (H_2S), methyl mercaptan (MeSH), dimethly sulfide (DMS), and dimethyl disulfide (DMDS) by gas chromatographic (GC) separation and flame photometric detection (FPD). These four compounds are know collectively as total reduced sulfur (TRS).

1.2 Applicability. This method is applicable for determination of TRS compounds from recovery furnaces, lime kilns, and smelt dissolving tanks at kraft pulp mills.

2. *Range and Sensitivity*

2.1 Range. The analytical range will vary with the sample loop size. Typically, the analytical range may extend from 0.1 to 100 ppm using 10 to 0.1-ml sample loop sizes. This eliminates the need for sample dilution in most cases.

2.2 Sensitivity. Using the 10-ml sample size, the minimum detectable concentration is approximately 50 ppb.

3. *Interferences*

3.1 Moisture Condensation. Moisture condensation in the sample delivery system, the analytical column, or the FPD burner block can cause losses or interferences. This is prevented by maintaining the probe, filter box, and connections at a temperature of at least 120 °C (248 °F). Moisture is removed in the SO_2 scrubber and heating the sample beyond this point is not necessary provided the ambient temperature is above 0 °C. Alternatively, moisture may be eliminated by heating the sample line, and by conditioning the sample with dry dilution air to lower its dew point below the operating temperature of the GC/FPD analytical system prior to analysis.

3.2 Carbon Monoxide and Carbon Dioxide. CO and CO_2 have a substantial desensitizing effect on the flame photometric detector even after dilution. Acceptable systems must demonstrate that they have eliminated this interference by some procedure such as eluting these compounds before any of the compounds to be measured. Compliance with this requirement can be demonstrated by submitting chromatograms of calibration gases with and without CO_2 in the diluent gas. The CO_2 level should be approximately 10 percent for the case with CO_2 present. The two chromatograms should show agreement within the precision limits of Section 4.1.

3.3 Particulate Matter. Particulate matter in gas samples can cause interference by eventual clogging of the analytical system. This interference is eliminated by using the Teflon filter after the probe.

3.4 Sulfur Dioxide (SO_2). Sulfur dioxide is not a specific interferent but may be present in such large amounts that it cannot be effectively separated from the other compounds of interest. The SO_2 scrubber described in Section 5.1.3 will effectively remove SO_2 from the sample.

4. *Precision and Accuracy*

4.1 GC/FPD Calibration Precision. A series of three consecutive injections of the same calibration gas, at any dilution, shall produce results which do not vary by more than ±5 percent from the mean of the three injections.

4.2 Calibration Drift. The calibration drift determined from the mean of three injections made at the beginning and end of any run or series of runs within a 24-hour period shall not exceed ±5 percent.

4.3 System Calibration Accuracy. Losses through the sample transport system must be measured and a correction factor developed to adjust the calibration accuracy to 100 percent.

5. *Apparatus*

5.1. Sampling.

5.1.1 Probe.

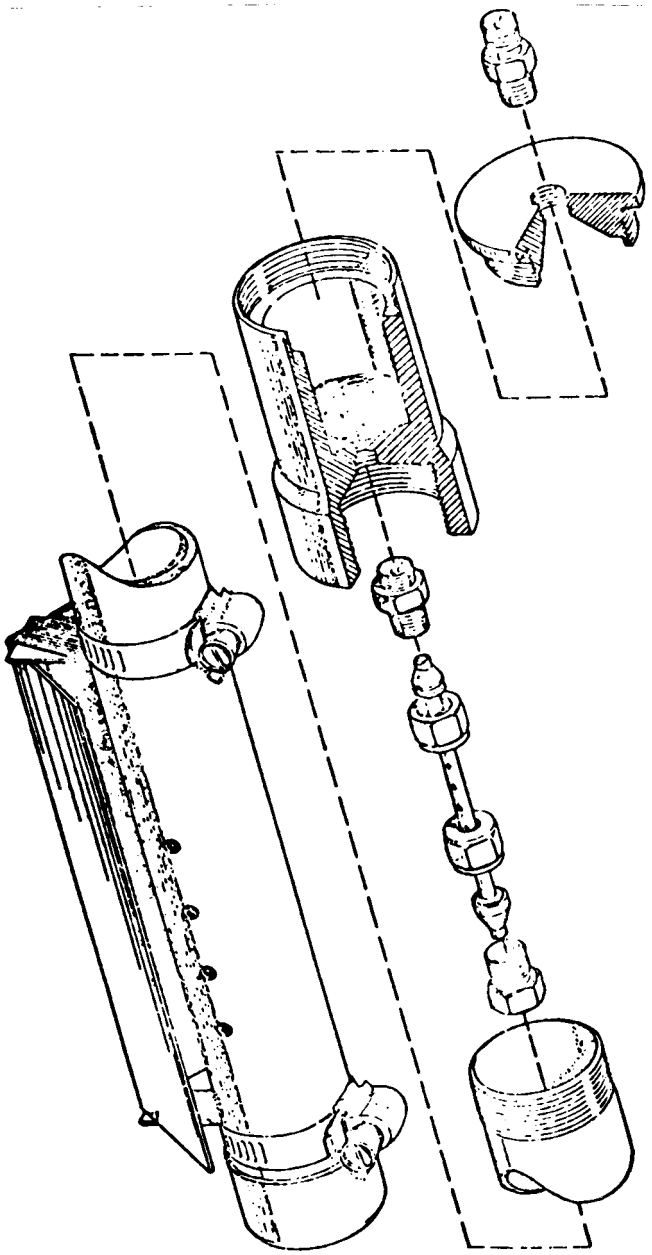

Figure 16-1. Probe used for sample gas containing high particulate loadings.

5.1.1.1 Teflon or Teflon-lined stainless steel. The probe must be heated to prevent moisture condensation. It shall be designed to allow calibration gas to enter the probe at or near the sample point entry. Any portion of the probe that contacts the stack gas must be heated to prevent moisture condensation.

5.1.1.2 Figure 16–1 illustrates the probe used in lime kilns and other sources where significant amounts of particulate matter are present. The probe is designed with the deflector shield placed between the sample and the gas inlet holes to reduce clogging of the filter and possible adsorption of sample gas. As an alternative, the probe described in Section 2.1.1 of Methods 16A having a nozzle directed away from the gas stream may be used at sources having significant amounts of particulate matter.

5.1.1.3 NOTE: Mention of trade names or specific products does not constitute an endorsement by the Environmental Protection Agency.

5.1.2 Particulate Filter. 50-mm Teflon filter holder and a 1- to 2-micron porosity Teflon filter (available through Savillex Corporation, 5325 Highway 101, Minnetonka, Minnesota 55343). The filter holder must be maintained in a hot box at a temperature of at least 120 °C (248 °F).

5.1.3 SO_2 Scrubber.

5.1.3.1 Three 300-ml Teflon segmented impingers connected in series with flexible, thick-walled, Teflon tubing. (Impinger parts and tubing available through Savillex.) The first two impingers contain 100 ml of citrate buffer and the third impinger is initially dry. The tip of the tube inserted into the solution should be constricted to less than 3-mm (⅛-in.) ID and should be immersed to a depth of at least 5 cm (2 in.). Immerse the impingers in an ice water bath and maintain near 0 °C. The scrubber solution will normally last for a 3-hour run before needing replacement. This will depend upon the effects of moisture and particulate matter on the solution strength and pH.

5.1.3.2 Connections between the probe, particulate filter, and SO_2 scrubber shall be made of Teflon and as short in length as possible. All portions of the probe, particulate filter, and connections prior to the SO_2 scrubber (or alternative point of moisture removal) shall be maintained at a temperature of at least 120 °C (248 °F).

5.1.4 Sample Line. Teflon, no greater than 1.3-cm (½-in.) ID. Alternative materials, such as virgin Nylon, may be used provided the line loss test is acceptable.

5.1.5 Sample Pump. The sample pump shall be leakless Teflon-coated diaphragm type or equivalent.

5.2 Dilution System. Needed only for high sample concentrations. The dilution system must be constructed such that all sample contacts are made of Teflon, glass, or stainless steel.

5.3 Gas Chromatograph. The gas chromatograph must have at least the following components:

5.3.1 Oven. Capable of maintaining the separation column at the proper operating temperature ±1 °C.

5.3.2 Temperature Gauge. To monitor column oven, detector, and exhaust temperature ±1 °C.

5.3.3 Flow System. Gas metering system to measure sample, fuel, combustion gas, and carrier gas flows.

5.3.4 Flame Photometric Detector.

5.3.4.1 Electrometer. Capable of full scale amplification of linear ranges of 10^{-9} to 10^{-4} amperes full scale.

5.3.4.2 Power Supply. Capable of delivering up to 750 volts.

5.3.4.3 Recorder. Compatible with the output voltage range of the electrometer.

5.3.4.4 Rotary Gas Valves. Multiport Teflon-lined valves equipped with sample loop. Sample loop volumes shall be chosen to provide the needed analytical range. Teflon tubing and fittings shall be used throughout to present an inert surface for sample gas. The gas chromatograph shall be calibrated with the sample loop used for sample analysis.

5.4 Gas Chromatogram Columns. The column system must be demonstrated to be capable of resolving the four major reduced sulfur compounds: H_2S, MeSH, DMS, and DMDS. It must also demonstrate freedom from known interferences.

To demonstrate that adequate resolution has been achieved, the tester must submit a chromatogram of a calibration gas containing all four of the TRS compounds in the concentration range of the applicable standard. Adequate resolution will be defined as base line separation of adjacent peaks when the amplifier attenuation is set so that the smaller peak is at least 50 percent of full scale. Baseline separation is defined as a return to zero ±5 percent in the interval between peaks. Systems not meeting this criteria may be considered alternate methods subject to the approval of the Administrator.

5.5 Calibration System. The calibration system must contain the following components. (Figure 16–2)

5.5.1 Tube Chamber. Chamber of glass or Teflon of sufficient dimensions to house permeation tubes.

5.5.2 Flow System. To measure air flow over permeation tubes at ±2 percent. Each flowmeter shall be calibrated after a complete test series with a wet test meter. If the flow measuring device differs from the wet test meter by 5 percent, the completed test shall be discarded. Alternatively, the tester may elect to use the flow data that would yield the lower flow measurement. Calibration with a wet test meter before a test is optional. Flow over the permeation device may also be determined using a soap bubble flowmeter.

5.5.3 Constant Temperature Bath. Device capable of maintaining the permeation tubes at the calibration temperature within ±0.1 °C.

5.5.4 Temperature Gauge. Thermometer or equivalent to monitor bath temperature within ±1 °C.

6. *Reagents*

6.1 Fuel. Hydrogen (H_2), prepurified grade or better.

6.2 Combustion Gas. Oxygen (O_2) or air, research purity or better.

6.3 Carrier Gas. Prepurified grade or better.

6.4 Diluent (If required). Air containing less than 50 ppb total sulfur compounds and less than 10 ppm each of moisture and total hydrocarbons.

6.5 Calibration Gases. Permeation tubes, one each of H_2S, MeSH, DMS, and DMDS, gravimetrically calibrated and certified at some convenient operating temperature. These tubes consist of hermetically sealed FEP Teflon tubing in which a liquified gaseous substance is enclosed. The enclosed gas permeates through the tubing wall at a constant rate. When the temperature is constant, calibration gases covering a wide range of known concentrations can be generated by varying and accurately measuring the flow rate of diluent gas passing over the tubes. These calibration gases are used to calibrate the GC/FPD system and the dilution system.

6.6 Citrate Buffer. Dissolve 300 grams of potassium citrate and 41 grams of anhydrous citric acid in 1 liter of deionized water. 284 grams of sodium citrate may be substituted for the potassium citrate. Adjust the pH to between 5.4 and 5.6 with potassium citrate or citric acid, as required.

6.7 Sample Line Loss Gas (Optional). As an alternative to permeation gas, H_2S cylinder gas may be used for the sample line loss test. The gas shall be calibrated against permeation devices having known permeation rates or by the procedure in Section 7 of Method 16A.

7. *Pretest Procedures*

The following procedures are optional but would be helpful in preventing any problem which might occur later and invalidate the entire test.

7.1 After the complete measurement system has been set up at the site and deemed to be operational, the following procedures should be completed before sampling is initiated.

7.1.1 Leak Test. Appropriate leak test procedures should be employed to verify the integrity of all components, sample lines, and connections. The following leak test procedure is suggested: For components upstream of the sample pump, attach the probe end of the sample line to a manometer or vacuum gauge, start the pump and pull greater than 50 mm (2 in.) Hg vacuum, close off the pump outlet, and then stop the pump and ascertain that there is no leak for 1 minute. For components after the pump, apply a slight positive pressure and check for leaks by applying a liquid (detergent in water, for example) at each joint. Bubbling indicates the presence of a leak. As an alternative to the initial leak-test, the sample line loss test described in Section 10.1 may be performed to verify the integrity of components.

7.1.2 System Performance. Since the complete system is calibrated following each test, the precise calibration of each component is not critical. However, these components should be verified to be operating properly. This verification can be performed by observing the response of flowmeters or of the GC output to changes in flow rates or calibration gas concentrations and ascertaining the response to be within predicted limits. In any component, or if the complete system fails to respond in a normal and predictable manner, the source of the discrepancy should be identified and corrected before proceeding.

8. *Calibration*

Prior to any sampling run, calibrate the system using the following procedures. (If more than one run is performed during any 24-hour period, a calibration need not be performed prior to the second and any subsequent runs. The calibration must, however, be verified as prescribed in Section 10, after the last run made within the 24-hour period.)

8.1 General Considerations. This section outlines steps to be followed for use of the GC/FPD and the dilution system (if applicable). The procedure does not include detailed instructions because the operation of these systems is complex, and it requires an understanding of the individual system being used. Each system should include a written operating manual describing in detail the operating procedures associated with each component in the measurement system. In addition, the operator should be familiar with the operating principles of the components, particularly the GC/FPD. The citations in the Bibliography at the end of this method are recommended for review for this purpose.

8.2 Calibration Procedure. Insert the permeation tubes into the tube chamber. Check the bath temperature to assure agreement with the calibration temperature of the tubes within ±0.1 °C. Allow 24 hours for the tubes to equilibrate. Alternatively equilibration may be verified by injecting samples of calibration gas at 1-hour intervals. The permeation tubes can be assumed to have reached equilibrium when consecutive hourly samples agree within the precision limits of Section 4.1.

Vary the amount of air flowing over the tubes to produce the desired concentrations for calibrating the analytical and dilution systems. The air flow across the tubes must at all times exceed the flow requirement of the analytical systems. The concentration in

parts per million generated by a tube containing a specific permeant can be calculated as follows:

$$C = K\frac{P_r}{ML} \qquad \text{Eq. 16-1}$$

Where:

C=Concentration of permeant produced in ppm.

P_r=Permeation rate of the tube in µg/min.

M=Molecular weight of the permeant (g/g-mole).

L=Flow rate, l/min, of air over permeant @ 20 °C, 760 mm Hg.

K=Gas constant at 20 °C and 760 mm Hg=24.04 l/g mole.

8.3 Calibration of Analysis System. Generate a series of three or more known concentrations spanning the linear range of the FPD (approximately 0.5 to 10 ppm for a 1-ml sample) for each of the four major sulfur compounds. Inject these standards into the GC/FPD analyzer and monitor the responses. Three injects for each concentration must not vary by more than 5 percent from the mean of the three injections. Failure to attain this precision is an indication of a problem in the calibration or analytical system. Any such problem must be identified and corrected before proceeding.

8.4 Calibration Curves. Plot the GC/FPD response in current (amperes) versus their causative concentrations in ppm on log-log coordinate graph paper for each sulfur compound. Alternatively, a least squares equation may be generated from the calibration data. Alternatively, a least squares equation may be generated from the calibration data using concentrations versus the appropriate instrument response units.

9. *Sampling and Analysis Procedure*

9.1 Sampling. Insert the sampling probe into the test port making certain that no dilution air enters the stack through the port. Begin sampling. Condition the entire system with sample for a minimum of 15 minutes prior to commencing analysis.

9.2 Analysis. Aliquots of sample are injected into the GC/FPD analyzer for analysis.

9.2.1 Sample Run. A sample run is composed of 16 individual analyses (injects) performed over a period of not less than 3 hours or more than 6 hours.

9.2.2 Observation for Clogging of Probe or Filter. If reductions in sample concentrations are observed during a sample run that cannot be explained by process conditions, the sampling must be interrupted to determine if the probe or filter is clogged with particulate matter. If either is found to be clogged, the test must be stopped and the results up to that point discarded. Testing may resume after cleaning or replacing the probe and filter. After each run, the probe and filter shall be inspected and, if necessary, replaced.

10. *Post-Test Procedures*

10.1 Sample line loss. A known concentration of hydrogen sulfide at the level of the applicable standard, ±20 percent, must be introduced into the sampling system at the opening of the probe in sufficient quantities to ensure that there is an excess of sample which must be vented to the atmosphere. The sample must be transported through the entire sampling system to the measurement system in the normal manner. (See figure 16–1). The resulting measured concentration should be compared to the known value to determine the sampling system loss.

For sampling losses greater than 20 percent in a sample run, the sample run is not to be used when determining the arithmetic mean of the performance test. For sampling losses of 0–20 percent, the sample concentration must be corrected by dividing the sample concentration by the fraction of recovery. The fraction of recovery is equal to one minus the ratio of the measured concentration to the known concentration of hydrogen sulfide in the sample line loss procedure. The known gas sample may be generated using permeation tubes. Alternatively, cylinders of hydrogen sulfide mixed in nitrogen and certified according to section 6.7 may be used. The optional pretest procedures provide a good guideline for determining if there are leaks in the sampling system.

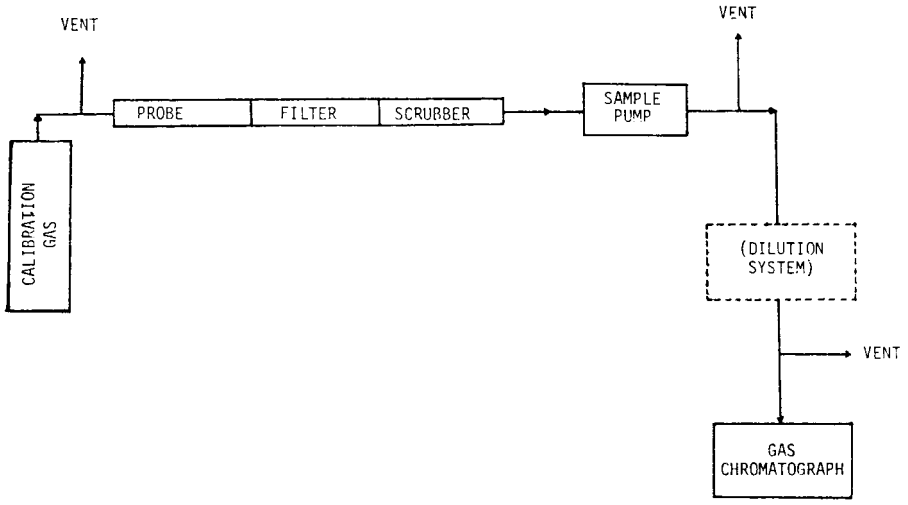

Figure 16-2. Determination of sample line loss.

10.2 Recalibration. After each run, or after a series of runs made within a 24-hour period, perform a partial recalibration using the procedures in Section 8. Only H_2S (or other calibration gas) need be used to recalibrate the GC/FPD analysis system (Section 8.3).

10.3 Determination of Calibration Drift. Compare the calibration curves obtained prior to the runs, to the calibration curves obtained under Section 10.2. The calibration drift should not exceed the limits set forth in Section 4.2. If the drift exceeds this limit, the intervening run or runs should be considered not valid. The tester, however, may instead have the option of choosing the calibration data set which would give the highest sample values.

11. *Calculations*

11.1 Determine the concentrations of each reduced sulfur compound detected directly from the calibration curves. Alternatively, the concentrations may be calculated using the equation for the least squares line.

11.2 Calculation of TRS. Total reduced sulfur will be determined for each analysis made by summing the concentrations of each reduced sulfur compound resolved during a given analysis.

$TRS=\Sigma(H_2S, MeSH, DMS, 2DMDS)d$ Eq. 16–2

Where:

TRS=Total reduced sulfur in ppm, dry basis.
H_2S=Hydrogen sulfide, ppm.
MeSH=Methyl mercaptan, ppm.
DMS=Dimethyl sulfide, ppm.
DMDS=Dimethyl disulfide, ppm.
d=Dilution factor, dimensionless.

11.3 Average TRS. The average TRS will be determined as follows:

$$\text{Average TRS} = \frac{\sum_{i=1}^{N} TRS_i}{N(1-B_{WO})}$$

Where:

Average TRS=Average total reduced sulfur in ppm, dry basis.
TRS_i=Total reduced sulfur in ppm as determined by Equation 16–2.
N=Number of samples.
B_{wo}=Fraction of volume of water vapor in the gas stream as determined by reference Method 4—Determination of Moisture in Stack Gases.

11.4 Average Concentration of Individual Reduced Sulfur Compounds.

$$C = \frac{\sum_{i=1}^{N} S_i}{N} \qquad \text{Eq. 16-4}$$

Where:

S_i=Concentration of any reduced sulfur compound from the ith sample injection, ppm.

C=Average concentration of any one of the reduced sulfur compounds for the entire run, ppm.

N=Number of injections in any run period.

12. *Bibliography*

12.1 O'Keeffe, A. E. and G. C. Ortman. ''Primary Standards for Trace Gas Analysis.'' Analytical Chemical Journal, 38,760 (1966).

12.2 Stevens, R. K., A. E. O'Keeffe, and G. C. Ortman. ''Absolute Calibration of a Flame Photometric Detector to Volatile Sulfur Compounds at Sub-Part-Per-Million Levels.'' Environmental Science and Technology, 3:7 (July, 1969).

12.3 Mulik, J. D., R. K. Stevens, and R. Baumgardner. ''An Analytical System Designed to Measure Multiple Malodorous Compounds Related to Kraft Mill Activities.'' Presented at the 12th Conference on Methods in Air Pollution and Industrial Hygiene Studies, University of Southern California, Los Angeles, CA. April 6–8, 1971.

12.4 Devonald, R. H., R. S. Serenius, and A. D. McIntyre. ''Evaluation of the Flame Photometric Detector for Analysis of Sulfur Compounds.'' Pulp and Paper Magazine of Canada, 73,3 (March, 1972).

12.5 Grimley, K. W., W. S. Smith, and R. M. Martin. ''The Use of a Dynamic Dilution System in the Conditioning of Stack Gases for Automated Analysis by a Mobile Sampling Van.'' Presented at the 63rd Annual APCA Meeting in St. Louis, MO. June 14–19, 1970.

12.6 General Reference. Standard Methods of Chemical Analysis Volume III A and B Instrumental Methods. Sixth Edition. Van Nostrand Reinhold Co.

METHOD 16A—DETERMINATION OF TOTAL REDUCED SULFUR EMISSIONS FROM STATIONARY SOURCES (IMPINGER TECHNIQUE)

1. *Applicability, Principle, Interferences, Precision, and Bias*

1.1 Applicability. This method is applicable to the determination of total reduced sulfur (TRS) emissions from recovery boilers, lime kilns, and smelt dissolving tanks at kraft pulp mills, and from other sources when specified in an applicable subpart of the regulations. The TRS compounds include hydrogen sulfide, methyl mercaptan, dimethyl sulfide, and dimethyl disulfide.

The flue gas must contain at least 1 percent oxygen for complete oxidation of all TRS to sulfur dioxide (SO_2). The lower detectable limit is 0.1 ppm SO_2 when sampling at 2 liters/min for 3 hours or 0.3 ppm when sampling at 2 liters/min for 1 hour. The upper concentration limit of the method exceeds TRS levels generally encountered at kraft pulp mills.

1.2 Principle. An integrated gas sample is extracted from the stack. SO_2 is removed selectively from the sample using a citrate buffer solution. TRS compounds are then thermally oxidized to SO_2, collected in hydrogen peroxide as sulfate, and analyzed by the Method 6 barium-thorin titration procedure.

1.3 Interferences. TRS compounds other than those regulated by the emission standards, if present, may be measured by this method. Therefore, carbonyl sulfide, which is partially oxidized to SO_2 and may be present in a lime kiln exit stack, would be a positive interferent.

Particulate matter from the lime kiln stack gas (primarily calcium carbonate) can cause a negative bias if it is allowed to enter the citrate scrubber; the particulate matter will cause the pH to rise and H_2S to be absorbed prior to oxidation. Furthermore, if the calcium carbonate enters the hydrogen peroxide impingers, the calcium will precipitate sulfate ion. Proper use of the particulate filter described in Section 2.1.3 will eliminate this interference.

1.4 Precision and Bias. Relative standard deviations of 2.0 and 2.6 percent were obtained when sampling a recovery boiler for 1 and 3 hours, respectively.

In a separate study at a recovery boiler, Method 16A was found to be unbiased relative to Method 16. Comparison of Method 16A with Method 16 at a lime kiln indicated that there was no bias in Method 16A. However, instability of the source emissions adversely affected the comparison. The precision of Method 16A at the lime kiln was similar to that obtained at the recovery boiler.

Relative standard deviations of 2.7 and 7.7 percent have been obtained for system performance checks.

2. *Apparatus*

2.1 Sampling. The sampling train is shown in Figure 16A–1 and component parts are discussed below. Modifications to this sampling train are acceptable provided the system performance check (Section 4.3) is met.

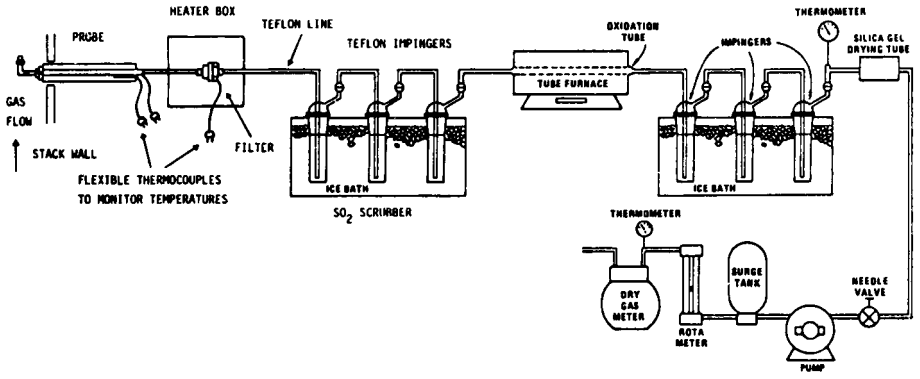

Figure 16A-1. Sampling Train

2.1.1 Probe. Teflon (mention of trade names or specific products does not constitute endorsement by the U.S. Environmental Protection Agency) tubing, 0.6-cm (¼-in.) diameter, sequentially wrapped with heat-resistant fiber strips, a rubberized heat tape (plug at one end), and heat-resistant adhesive tape. A flexible thermocouple or other suitable temperature measuring device should be placed between the Teflon tubing and the fiber strips so that the temperature can be monitored to prevent softening of the probe. The probe should be sheathed in stainless steel to provide in-stack rigidity. A series of bored-out stainless steel fittings placed at the front of the sheath will prevent moisture and particulate from entering between the probe and sheath. A 0.6-cm (¼-in.) Teflon elbow (bored out) should be attached to the inlet of the probe, and a 2.54-cm (1-in.) piece of Teflon tubing should be attached at the open end of the elbow to permit the opening of the probe to be turned away from the particulate stream; this will reduce the amount of particulate drawn into the sampling train. The sampling probe is depicted in Figure 16A–2.

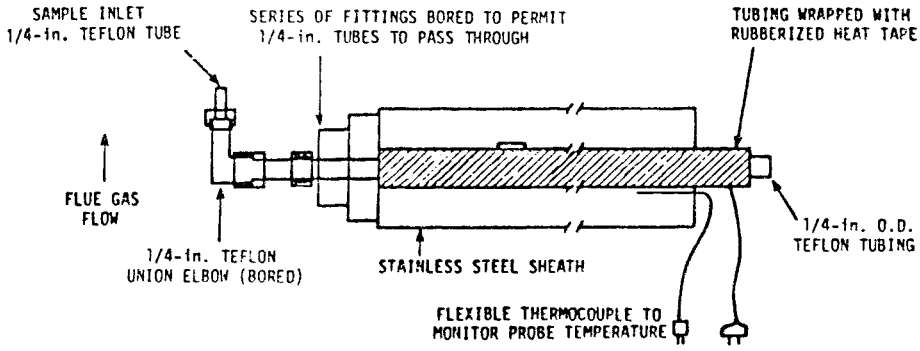

Figure 16A-2. Angled sampling probe

2.1.2 Probe Brush. Nylon bristle brush with handle inserted into a 3.2-mm (⅛-in.) Teflon tubing. The Teflon tubing should be long enough to pass the brush through the length of the probe.

2.1.3 Particulate Filter. 50-mm Teflon filter holder and a 1- to 2-μ porosity, Teflon filter (available through Savillex Corporation, 5325 Highway 101, Minnetonka, Minnesota 55343). The filter holder must be maintained in a hot box at a temperature sufficient to prevent moisture condensation. A temperature of 121 °C (250 °F) was found to be sufficient when testing a lime kiln under subfreezing ambient conditions.

2.1.4 SO_2 Scrubber. Three 300-ml Teflon segmented impingers connected in series with flexible, thick-walled, Teflon tubing. (Impinger parts and tubing available through Savillex.) The first two impingers contain 100 ml of citrate buffer and the third impinger is initially dry. The tip of the tube inserted into the solution should be constricted to less than 3 mm (⅛ in.) ID and should be immersed to a depth of at least 5 cm (2 in.).

2.1.5 Combustion Tube. Quartz glass tubing with an expanded combustion chamber 2.54 cm (1 in.) in diameter and at least 30.5 cm (12 in.) long. The tube ends should have an outside diameter of 0.6 cm (¼ in.) and be at least 15.3 cm (6 in.) long. This length is necessary to maintain the quartz-glass connector at ambient temperature and thereby avoid leaks. Alternatively, the outlet may be constructed with a 90-degree glass elbow and socket that would fit directly onto the inlet of the first peroxide impinger.

2.1.6 Furnace. A furnace of sufficient size to enclose the combustion chamber of the combustion tube with a temperature regulator capable of maintaining the temperature at 800±100 °C. The furnace operating temperature should be checked with a thermocouple to ensure accuracy.

2.1.7 Peroxide Impingers, Stopcock Grease, Thermometer, Drying Tube, Valve, Pump, Barometer, and Vacuum Gauge. Same as in Method 6, Sections 2.1.2, 2.1.4, 2.1.6, 2.1.7, 2.1.8, 2.1.11, and 2.1.12, respectively.

2.1.8 Rate Meter. Rotameter, or equivalent, accurate to within 5 percent at the selected flow rate of 2 liters/min.

2.1.9 Volume Meter. Dry gas meter capable of measuring the sample volume under the sampling conditions of 2 liters/min with an accuracy of ±2 percent.

2.1.10 Polyethylene Bottles. 250-ml bottles for hydrogen peroxide solution recovery.

2.2 Sample Preparation and Analysis. Same as in Method 6, Section 2.3, except a 10-ml buret with 0.05-ml graduations is required and the spectrophotometer is not needed.

3. *Reagents*

Unless otherwise indicated, all reagents must conform to the specifications established by the Committee on Analytical Reagents of the American Chemical Society. When such specifications are not available, the best available grade shall be used.

3.1 Sampling. The following reagents are needed:

3.1.1 Water. Same as in Method 6, Section 3.1.1.

3.1.2 Citrate Buffer. 300 g of potassium citrate (or 284 g of sodium citrate) and 41 g of anhydrous citric acid dissolved in 1 liter of water (200 ml is needed per test). Adjust the pH to between 5.4 and 5.6 with potassium citrate or citric acid, as required.

3.1.3 Hydrogen Peroxide, 3 percent. Same as in Method 6, Section 3.1.3 (40 ml is needed per sample).

3.1.4 Recovery Check Gas. Hydrogen sulfide (100 ppm or less) in nitrogen, stored in aluminum cylinders. Verify the concentration by Method 11 or by gas chromatography where the instrument is calibrated with an H_2S permeation tube as described below. For Method 11, the standard deviation should not exceed 5 percent on at least three 20-minute runs.

Alternatively, hydrogen sulfide recovery gas generated from a permeation device gravimetrically calibrated and certified at some convenient operating temperature may be used. The permeation rate of the device must be such that at a dilution gas flow rate of 3 liters/min, an H_2S concentration in the range of the stack gas or within 20 percent of the standard can be generated.

3.1.5 Combustion Gas. Gas containing less than 50 ppb reduced sulfur compounds and less than 10 ppm total hydrocarbons. The gas may be generated from a clean-air system that purifies ambient air and consists of the following components: Diaphragm pump, silica gel drying tube, activated charcoal tube, and flow rate measuring device. Flow from a compressed air cylinder is also acceptable.

3.2 Sample Recovery and Analysis. Same as in Method 6, Sections 3.2.1 and 3.3.

4. *Procedure*

4.1 Sampling. Before any source sampling is done, conduct two 30-minute system performance checks in the field as detailed in Section 4.3 to validate the sampling train components and procedure (optional).

4.1.1 Preparation of Collection Train. For the SO_2 scrubber, measure 100 ml of citrate buffer into the first and second impingers; leave the third impinger empty. Immerse the impingers in an ice bath, and locate them as close as possible to the filter heat box. The connecting tubing should be free of loops. Maintain the probe and filter temperatures sufficiently high to prevent moisture condensation, and monitor with a suitable temperature indicator.

For the Method 6 part of the train, measure 20 ml of 3 percent hydrogen peroxide into

the first and second midget impingers. Leave the third midget impinger empty, and place silica gel in the fourth midget impinger. Alternatively, a silica gel drying tube may be used in place of the fourth impinger. Maintain the oxidation furnace at 800±100 °C. Place crushed ice and water around all impingers.

4.1.2 Citrate Scrubber Conditioning Procedure. Condition the citrate buffer scrubbing solution by pulling stack gas through the Teflon impingers and bypassing all other sampling train components. A purge rate of 2 liters/min for 10 minutes has been found to be sufficient to obtain equilibrium. After the citrate scrubber has been conditioned, assemble the sampling train, and conduct (optional) a leak-check as described in Method 6, Section 4.1.2.

4.1.3 Sample Collection. Same as in Method 6, Section 4.1.3, except the sampling rate is 2 liters/min (± 10 percent) for 1 or 3 hours. After the sample is collected, remove the probe from the stack, and conduct (mandatory) a post-test leak check as described in Method 6, Section 4.1.2. The 15-minute purge of the train following collection should not be performed. After each 3-hour test run (or after three 1-hour samples), conduct one system performance check (see Section 4.3) to determine the reduced sulfur recovery efficiency through the sampling train. After this system performance check and before the next test run, rinse and brush the probe with water, replace the filter, and change the citrate scrubber (recommended but optional).

In Method 16, a test run is composed of 16 individual analyses (injects) performed over a period of not less than 3 hours or more than 6 hours. For Method 16A to be consistent with Method 16, the following may be used to obtain a test run: (1) collect three 60-minute samples or (2) collect one 3-hour sample. (Three test runs constitute a test.)

4.2 Sample Recovery. Disconnect the impingers. Quantitatively transfer the contents of the midget impingers of the Method 6 part of the train into a leak-free polyethylene bottle for shipment. Rinse the three midget impingers and the connecting tubes with water and add the washings to the same storage container. Mark the fluid level. Seal and identify the sample container.

4.3 System Performance Check. A system performance check is done (1) to validate the sampling train components and procedure (prior to testing; optional) and (2) to validate a test run (after a run). Perform a check in the field prior to testing consisting of a least two samples (optional), and perform an additional check after each 3-hour run or after three 1-hour samples (mandatory).

The checks involve sampling a known concentration of H_2S and comparing the analyzed concentration with the known concentration. Mix the H_2S recovery gas (Section 3.1.4) and combustion gas in a dilution system such as is shown in Figure 16A–3. Adjust the flow rates to generate an H_2S concentration in the range of the stack gas or within 20 percent of the applicable standard and an oxygen concentration greater than 1 percent at a total flow rate of at least 2.5 liters/min. Use Equation 16A–3 to calculate the concentration of recovery gas generated. Calibrate the flow rate from both sources with a soap bubble flow tube so that the diluted concentration of H_2S can be accurately calculated. Collect 30-minute samples, and analyze in the normal manner (as discussed in Section 4.1.3). Collect the sample through the probe of the sampling train using a manifold or some other suitable device that will ensure extraction of a representative sample.

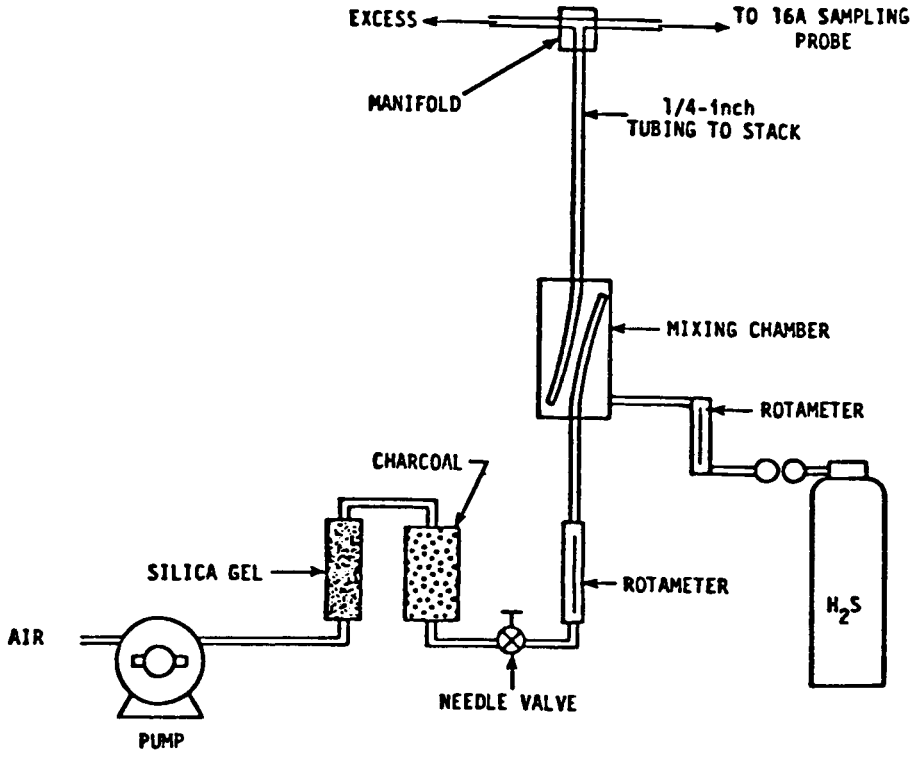

Figure 16A-3. Recovery gas dilution system.

The recovery check must be performed in the field prior to replacing the SO_2 scrubber and particulate filter and before the probe is cleaned. A sample recovery of 100 ±20 percent must be obtained for the data to be valid and should be reported with the emission data, but should not be used to correct the data. However, if the performance check results do not affect the compliance or noncompliance status of the affected facility, the Administrator may decide to accept the results of the compliance test. Use Equation 16A–4 to calculate the recovery efficiency.

4.4 Sample Analysis. Same as in Method 6, Section 4.3, except for 1-hour sampling, take a 40-ml aliquot, add 160 ml of 100 percent isopropanol, and four drops of thorin. Analyze an EPA SO_2 field audit sample with each set of samples. Such audit samples are available from the Source Branch, Quality Assurance Division, Environmental Monitoring Systems Laboratory, U. S. Environmental Protection Agency, Research Triangle Park, North Carolina 27711.

5. *Calibration*

5.1 Metering System, Thermometers, Rotameters, Barometers, and Barium Perchlorate Solution. Calibration procedures are presented in Method 6, Sections 5.1 through 5.5.

6. *Calculations*

In the calculations, at least one extra decimal figure should be retained beyond that of the acquired data. Figures should be rounded off after final calculations.

6.1 Nomenclature.

C_{TRS}=Concentration of TRS as SO_2, dry basis corrected to standard conditions, ppm.

C_{RG}=Concentration of recovery gas generated, ppm.

C_{H2S}=Verified concentration of H_2S recovery gas.

N=Normality of barium perchlorate titrant, milliequivalents/ml.

P_{bar}=Barometric pressure at exit orifice of the dry gas meter, mm Hg (in. Hg).

P_{std}=Standard absolute pressure, 760 mm Hg (29.92 in. Hg).

Q_{H2S}=Calibrated flow rate of H_2S recovery gas, liters/min.

Q_{CG}=Calibrated flow rate of combustion gas, liters/min.

R=Recovery efficiency for the system performance check, percent.

T_m=Average dry gas meter absolute temperature, °K (°R).

T_{std}=Standard absolute temperature, 293 °K, (528 °R).

V_a=Volume of sample aliquot titrated, ml.

V_m=Dry gas volume as measured by the dry gas meter, liters (dcf).

$V_{m(std)}$=Dry gas volume measured by the dry gas meter, corrected to standard conditions, liters (dscf).

V_{soln}=Total volume of solution in which the sulfur dioxide sample is contained, 100 ml.

V_t=Volume of barium perchlorate titrant used for the sample, ml (average of replicate titrations).

V_{tb}=Volume of barium perchlorate titrant used for the blank, ml.

Y=Dry gas meter calibration factor.

32.03=Equivalent weight of sulfur dioxide, mg/meq.

6.2 Dry Sample Gas Volume, Corrected to Standard Conditions.

$$V_{m(std)} = V_m Y \frac{T_{std}}{T_m} \frac{P_{bar}}{P_{std}} = K_1 Y \frac{V_m - P_{bar}}{T_m} \qquad \text{Eq. 16A-1}$$

Where: K_1=0.3858 °K/mm Hg for metric units.

6.3 Concentration of TRS as ppm SO_2.

$$C_{TRS(ppm)} = \frac{K_2 (V_t - V_{tb}) N (V_{soln}/V_a)}{V_{m(std)}} \qquad \text{Eq. 16A-2}$$

Where:

$$K_2 = \frac{32.03\,mg}{meq} \frac{24.05\,liters}{mole} \frac{1\,mole}{64.06\,g} \frac{1\,g}{1000\,mg} \frac{1000\,ml}{liter} \frac{1000\,\mu l}{1\,ml} = 12025 \frac{\mu l}{meq}$$

6.4 Concentration of Recovery Gas Generated in the System Performance Check.

$$C_{RG} = \frac{(Q_{H2S})(C_{H2S})}{Q_{H2S} + Q_{CG}} \qquad \text{Eq. 16A-3}$$

6.5 Recovery Efficiency for the System Performance Check.

$$R = \frac{C_{TRS}}{C_{RG}} \times 100 \qquad \text{Eq. 16A-4}$$

7. *Alternative Procedures*

7.1 *Determination of H_2S Content in Cylinder Gases.* As an alternative to the procedures specified in section 3.1.4, the following procedure may be used to verify the concentration of the recovery check gas. The H_2S is collected from the calibration gas cylinder and is absorbed in zinc acetate solution to form zinc sulfide. The latter compound is then measured iodometrically. The method has been examined in the range of 5 to 1500 ppm. There are no known interferences to this method when used to analyze cylinder gases containing H_2S in nitrogen. Laboratory tests have shown a relative standard deviation of less than 3 percent. The method showed no bias when compared to a gas chromatographic method that used gravimetrically certified permeation tubes for calibration.

7.1.1 *Sampling Apparatus.* The sampling train is shown in Figure 16A–4 and consists of the following components:

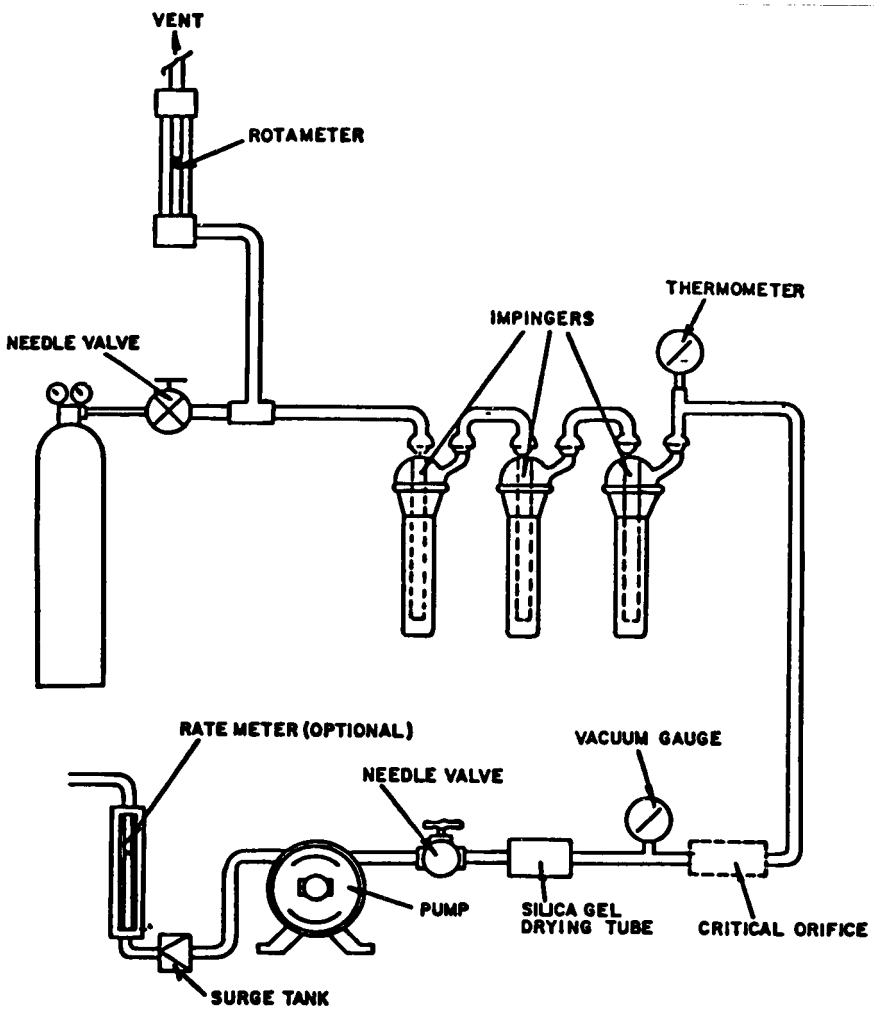

Figure 16A-4. Recovery check gas sampling train.

7.1.1.1 *Sampling Line.* Teflon tubing (¼-in.) to connect the cylinder regulator to the sampling valve.

7.1.1.2 *Needle Valve.* Stainless steel or Teflon needle valve to control the flow rate of gases to the impingers.

7.1.1.3 *Impingers.* Three impingers of approximately 100-ml capacity, constructed to permit the addition of reagents through the gas inlet stem. The impingers shall be connected in series with leak-free glass or Teflon connectors. The impinger bottoms have a standard 24/25 ground-glass fitting. The stems are from standard ¼-in. (0.64-cm) ball joint midget impingers, custom lengthened by about 1 in. When fitted together, the stem end should be approximately ½ in. (1.27-cm) from the bottom (Southern Scientific, Inc., Micanopy, Florida: Set Number S6962–048). The third in-line impinger acts as a drop-out bottle.

7.1.1.4 *Drying Tube,* Flowmeter, and Barometer. Same as in Method 11, Sections 5.1.5, 5.1.8, and 5.1.10.

7.1.1.5 *Cylinder Gas Regulator.* Stainless steel, to reduce the pressure of the gas stream entering the Teflon sampling line to a safe level.

7.1.1.6 *Soap Bubble Meter.* Calibrated for 100 and 500 ml, or two separate bubble meters.

7.1.1.7 *Critical Orifice.* For volume and rate measurements. The critical orifice may be fabricated according to Section 7.1.4.3 and must be calibrated as specified in Section 7.1.8.4.

7.1.1.8 *Graduated Cylinder.* 50-ml size.

7.1.1.9 *Volumetric Flask.* 1-liter size.

7.1.1.10 *Volumetric Pipette.* 15-ml size.

7.1.1.11 *Vacuum Gauge.* Minimum 20-in. Hg capacity.

7.1.1.12 *Stopwatch.*

7.1.2 *Sample Recovery and Analysis Apparatus.*

7.1.2.1 *Erlenmeyer Flasks.* 125- and 250-ml sizes.

7.1.2.2 *Pipettes.* 2-, 10-, 20-, and 100-ml volumetric.

7.1.2.3 *Burette.* 50-ml size.

7.1.2.4 *Volumetric Flask.* 1-liter size.

7.1.2.5 *Graduated Cylinder.* 50-ml size.

7.1.2.6 *Wash Bottle.*

7.1.2.7 *Stirring Plate and Bars.*

7.1.3 *Reagents.* Unless otherwise indicated, all reagents shall conform to the specifications established by the Committee on Analytical Reagents of the American Chemical Society, where such specifications are available. Otherwise, use the best available grade.

7.1.3.1 *Water.* Same as in Method 11, Section 6.1.3.

7.1.3.2 *Zinc Acetate Absorbing Solution.* Dissolve 20 g zinc acetate in water and dilute to 1 liter.

7.1.3.3 *Potassium Bi-iodate [$KH(IO_3)_2$ Solution, Standard 0.100 N.* Dissolve 3.249 g anhydrous $KH(IO_3)_2$ in water, and dilute to 1 liter.

7.1.3.4 *Sodium Thiosulfate ($Na_2S_2O_3$) Solution, Standard 0.1 N.* Same as in Method 11, Section 6.3.1. Standardize according to Section 7.1.8.2.

7.1.3.5 *$Na_2S_2O_3$ Solution, Standard 0.01 N.* Pipette 100.0 ml of 0.1 N $Na_2S_2O_3$ solution into a 1-liter volumetric flask, and dilute to the mark with water.

7.1.3.6 *Iodine Solution, 0.1 N.* Same as in Method 11, Section 6.2.2.

7.1.3.7 *Standard Iodine Solution, 0.01 N.* Same as in Method 11, Section 6.2.3. Standardize according to Section 7.1.8.3.

7.1.3.8 *Hydrochloric Acid (HCl) Solution, 10 Percent by Weight.* Add 230 ml concentrated HCl (specific gravity 1.19) to 770 ml water.

7.1.3.9 *Starch Indicator Solution.* To 5 g starch (potato, arrowroot, or soluble), add a little cold water, and grind in a mortar to a thin paste. Pour into 1 liter of boiling water, stir, and let settle overnight. Use the clear supernatant. Preserve with 1.25 g salicylic acid, 4 g zinc chloride, or a combination of 4 g sodium propionate and 2 g sodium azide per liter of starch solution. Some commercial starch substitutes are satisfactory.

7.1.4 *Sampling Procedure.*

7.1.4.1 *Selection of Gas Sample Volumes.* This procedure has been validated for estimating the volume of cylinder gas sample needed when the H_2S concentration is in the range of 5 to 1500 ppm. The sample volume ranges were selected in order to ensure a 35 to 60 percent consumption of the 20 ml of 0.01 N iodine (thus ensuring a 0.01 N $Na_2S_2O_3$ titer of approximately 7 to 12 ml). The sample volumes for various H_2S concentrations can be estimated by dividing the approximate ppm-liters desired for a given concentration range by the H_2S concentration stated by the manufacturer.

Approximate cylinder gas H_2S concentration (ppm)	Approximate ppm-liters desired
5 to <30	650
30 to <500	800
500 to <1500	1000

For example, for analyzing a cylinder gas containing approximately 10 ppm H_2S, the optimum sample volume is 65 liters (650 ppm-liters/10 ppm). For analyzing a cylinder gas containing approximately 1000 ppm H_2S, the optimum sample volume is 1 liter (1000 ppm-liters/1000 ppm).

7.1.4.2 *Critical Orifice Flow Rate Selection.* The following table shows the ranges of sample flow rates that are desirable in order to ensure capture of H_2S in the impinger solution. Slight deviations from these ranges will not have an impact on measured concentrations.

Cylinder gas H_2S concentration (ppm)	Critical orifice flow rate (ml/min)
5 to <50 ppm	1500 ± 500
50 to <250 ppm	500 ± 250
250 to <1000 ppm	200 ± 50
<1000 ppm	75 ± 25

7.1.4.3 *Critical Orifice Fabrication.* Critical orifice of desired flow rates may be fabricated by selecting an orifice tube of desired length and connecting 1/16-in. x 1/4-in. (0.16-cm x 0.64-cm) reducing fittings to both ends. The inside diameters and lengths of orifice tubes needed to obtain specific flow rates are shown below.

Tube (in. OD)	Tube (in. ID)	Length (in.)	Flow rate (ml/min)	Altech catalog No.[1]
1/16	0.007	1.2	85	301430
1/16	0.01	3.2	215	300530
1/16	0.01	1.2	350	300530
1/16	0.02	1.2	1400	300230

[1] Altech Associates, 2051 Waukegon Road., Deerfield, Illinois 60015.

7.1.4.4 *Determination of Critical Orifice Approximate Flow Rate.* Connect the critical orifice to the sampling system as shown in Figure 16A–4 but without the H_2S cylinder. Connect a rotameter in the line to the first impinger. Turn on the pump, and adjust the valve to give a reading of about half atmospheric pressure. Observe the rotameter reading. Slowly increase the vacuum until a stable flow rate is reached, and record this as the critical vacuum. The measured flow rate indicates the expected critical flow rate of the orifice. If this flow rate is in the range shown in Section 7.1.4.2, proceed with the critical orifice calibration according to Section 7.1.8.4.

7.1.4.5 *Determination of Approximate Sampling Time.* Determine the approximate sampling time for a cylinder of known concentration. Use the optimum sample volume obtained in Section 7.1.4.1.

$$\text{Approximate sampling time (min)} = \frac{\text{Optimum volume} \times 1000}{\text{Critical orifice flow rate (ml/min)}}$$

7.1.4.6 *Sample Collection.* Connect the Teflon tubing, Teflon tee, and rotameter to the flow control needle valve as shown in Figure 16A–4. Vent the rotameter to an exhaust hood. Plug the open end of the tee. Five to 10 minutes prior to sampling, open the cylinder valve while keeping the flow control needle valve closed. Adjust the delivery pressure to 20 psi. Open the needle valve slowly until the rotameter shows a flow rate approximately 50 to 100 ml above the flow rate of the critical orifice being used in the system.

Place 50 ml of zinc acetate solution in two of the impingers, connect them and the empty third impinger (dropout bottle) and the rest of the equipment as shown in Figure 16A–4. Make sure the ground-glass fittings are tight. The impingers can be easily stabilized by using a small cardboard box in which three holes have been cut, to act as a holder. Connect the Teflon sample line to the first impinger. Cover the impingers with a dark cloth or piece of plastic to protect the absorbing solution from light during sampling.

Record the temperature and barometric pressure. Note the gas flow rate through the rotameter. Open the closed end of the tee. Connect the sampling tube to the tee, ensuring a tight connection. Start the sampling pump and stopwatch simultaneously. Note the decrease in flow rate through the excess flow rotameter. This decrease should equal the known flow rate of the critical orifice being used. Continue sampling for the period determined in Section 7.1.4.5.

When sampling is complete, turn off the pump and stopwatch. Disconnect the sampling line from the tee and plug it. Close the needle valve followed by the cylinder valve. Record the sampling time.

7.1.5 *Blank Analysis.* While the sample is being collected, run a blank as follows: To a 250-ml Erlenmeyer flask, add 100 ml of zinc acetate solution, 20.0 ml. 0.01 N iodine solution, and 2 ml HCl solution. Titrate, while stirring, with 0.01 N $Na_2S_20_3$ until the solution is light yellow. Add starch, and continue titrating until the blue color disappears. Analyze a blank with each sample, as the blank titer has been observed to change over the course of a day.

NOTE: Iodine titration of zinc acetate solutions is difficult to perform because the solution turns slightly white in color near the end point, and the disappearance of the blue color is hard to recognize. In addition, a blue color may reappear in the solution about 30 to 45 seconds after the titration endpoint is reached. This should not be taken to mean the original endpoint was in error. It is recommended that persons conducting this test

perform several titrations to be able to correctly identify the endpoint. The importance of this should be recognized because the results of this analytical procedure are extremely sensitive to errors in titration.

7.1.6 *Sample Analysis.* Sample treatment is similar to the blank treatment. Before detaching the stems from the bottoms of the impingers, add 20.0 ml of 0.01 N iodine solution *through the stems* of the impingers holding the zinc acetate solution, dividing it between the two (add about 15 ml to the first impinger and the rest to the second). Add 2 ml HCl solution through the stems, dividing it as with the iodine. Disconnect the sampling line, and store the impingers for 30 minutes. At the end of 30 minutes, rinse the impinger stems into the impinger bottoms. Titrate the impinger contents with 0.01 N $Na_2S_20_3$. Do not transfer the contents of the impinger to a flask because this may result in a loss of iodine and cause a positive bias.

7.1.7 *Post-test Orifice Calibration.* Conduct a post-test critical orifice calibration run using the calibration procedures outlined in Section 7.1.8.4. If the Q_{std} obtained before and after the test differs by more than 5 percent, void the sample; if not, proceed to perform the calculations.

7.1.8 *Calibrations and Standardizations.*

7.1.8.1 *Rotameter and Barometer.* Same as in Method 11, Sections 8.2.3 and 8.2.4.

7.1.8.2 *$Na_2S_2O_3$ Solution, 0.1 N.* Standardize the 0.1 N $Na_2S_2O_3$ solution as follows: To 80 ml water, stirring constantly, add 1 ml concentrated H_2SO_4, 10.0 ml 0.100 N $KH(IO_3)_2$ and 1 g potassium iodide. Titrate immediately with 0.1 N $Na_2S_2O_3$ until the solution is light yellow. Add 3 ml starch solution, and titrate until the blue color just disappears. Repeat the titration until replicate analyses agree within 0.05 ml. Take the average volume of $Na_2S_2O_3$ consumed to calculate the normality to three decimal figures using Equation 16A–5.

7.1.8.3 *Iodine Solution, 0.01 N.* Standardize the 0.01 N iodine solution as follows: Pipet 20.0 ml of 0.01 N iodine solution into a 125-ml Erlenmeyer flask. Titrate with standard 0.01 N $Na_2S_2O_3$ solution until the solution is light yellow. Add 3 ml starch solution, and continue titrating until the blue color just disappears.

If the normality of the iodine tested is not 0.010, add a few ml of 0.1 N iodine solution if it is low, or a few ml of water if it is high, and standardize again. Repeat the titration until replicate values agree within 0.05 ml. Take the average volume to calculate the normality to three decimal figures using Equation 16A–6.

7.1.8.4 *Critical Orifice.* Calibrate the critical orifice using the sampling train shown in Figure 16A–4 but without the H_2S cylinder and vent rotameter. Connect the soap bubble meter to the Teflon line that is connected to the first impinger. Turn on the pump, and adjust the needle valve until the vaccum is higher than the critical vacuum determined in Section 7.1.4.4. Record the time required for gas flow to equal the soap bubble meter volume (use the 100-ml soap bubble meter for gas flow rates below 100 ml/min, otherwise use the 500-ml soap bubble meter). Make three runs, and record the data listed in Table 1. Use these data to calculate the volumetric flow rate of the orifice.

7.1.9 *Calculations.*

7.1.9.1 *Nomenclature.*

B_{wa}=Fraction of water vapor in ambient air during orifice calibration.

C_{H2S}=H_2S concentration in cylinder gas, ppm.

$$K = \text{Conversion factor} = 12025\ \text{ml/eq} = \frac{17.03\ \text{g}}{\text{g-eq}}\ \frac{24.05\ \text{liters}\ H_2S}{\text{mole}\ H_2S}\ \frac{1\ \text{mole}\ H_2S}{34.06\ \text{g}\ H_2S}\ \frac{10^3\ \text{ml}}{\text{liter}}$$

M_a=Molecular weight of ambient air saturated at impinger temperature, g/g-mole.

M_s=Molecular weight of sample gas (nitrogen) saturated at impinger temperature, g/g-mole. (For tests carried out in a laboratory where the impinger temperature is 25 °C, M_a=28.5 g/g-mole and M_s=27.7 g/g-mole.)

N_I=Normality of standard iodine solution (0.01 N), g-eq/liter.

N_T=Normality of standard $Na_2S_2O_3$ solution (0.01 N), g-eq/liter.

P_{bar}=Barometric pressure, mm Hg.

P_{std}=Standard absolute pressure, 760 mm Hg.

Q_{std}=Volumetric flow rate through critical orifice, liters/min.

Date

Critical orifice ID

Soap bubble meter volume, V_{sb} liters

Time, Θ_{sb}

Run no. 1	min	sec
Run no. 2	min	sec
Run no. 3	min	sec
Average	min	sec

Convert the seconds to fraction of minute:

Time = min + Sec/60 = min

Barometric pressure, P_{bar} = mm Hg
Ambient temperature, t_{amb} = 273 + °C = °K

Pump vacuum, = mm Hg. (This should be approximately 0.4 times barometric pressure.)

$$V_{sb(std)} = \frac{(V_{sb})(T_{std})(P_{bar})(10^{-3})}{(T_{amb})(P_{std})} = -----\text{liters}$$

$$Q_{std} = \frac{V_{sb(std)}}{\theta_{sb}} = ------ \text{ liters/min}$$

$$C_{H2S} = \frac{K N_T (V_{TB} - V_T)}{V_{m(std)}} \qquad \text{Eq. 16A-8}$$

TABLE 1—CRITICAL ORIFICE CALIBRATION DATA.

$Q_{std, average}$= Average standard flow rate through critical orifice, liters/min.
$Q_{std, before}$= Average standard flow rate through critical orifice determined before H_2S sampling (Section 7.1.4.4), liters/min.
$Q_{std, after=}$ Average standard flow rate through critical orifice determined after H_2S sampling (Section 7.1.7), liters/min.
T_{amb} = Absolute ambient temperature, °K.
T_{std} = Standard absolute temperature, 293 °K.
Θ_s = Sampling time, min.
Θ_{sb} = Time for soap bubble meter flow rate measurement, min.
$V_{m(std)}$ = Sample gas volume measured by the critical orifice, corrected to standard conditions, liters.
V_{sb} = Volume of gas as measured by the soap bubble meter, ml.
$V_{sb(std)}$ = Volume of gas as measured by the soap bubble meter, corrected to standard conditions, liters.
V_I = Volume of standard iodine solution (0.01 N) used, ml.
V_T = Volume of standard $Na_2S_2O_3$ solution (0.01 N) used, ml.
V_{TB} = Volume of standard $Na_2S_2O_3$ solution (0.01 N) used for the blank, ml.

7.1.9.2 Normality of Standard $Na_2S_2O_3$ Solution (0.1. N).

$$N_T = \frac{1}{\text{ml } Na_2S_2O_3 \text{ Consumed}} \qquad \text{Eq. 16A-5}$$

7.1.9.3 Normality of Standard Iodine Solution (0.01 N).

$$N_I = \frac{N_T V_T}{V_I} \qquad \text{Eq. 16A-6}$$

7.1.9.4 Sample Gas Volume.

$$V_{m(std)} = (\overline{Q}_{std})(\theta_s)(1 - B_{wa})\frac{M_a}{M_b} \qquad \text{Eq. 16A-7}$$

7.1.9.5 Concentration of H_2S in the Gas Cylinder.

8. Bibliography

1. American Public Health Association, American Water Works Association, and Water Pollution Control Federation. Standard Methods for the Examination of Water and Wastewater. Washington, DC. American Public Health Association. 1975. p. 316–317.

2. American Society for Testing and Materials. Annual Book of ASTM Standards. Part 31: Water, Atmospheric Analysis. Philadelphia, PA. 1974. p. 40–42.

3. Blosser, R.O. A Study of TRS Measurement Methods. National Council of the Paper Industry for Air and Stream Improvement, Inc., New York, NY. Technical Bulletin No. 434. May 1984. 14 p.

4. Blosser, R.O., H.S. Oglesby, and A.K. Jain. A Study of Alternate SO_2 Scrubber Designs Used for TRS Monitoring. A Special Report by the National Council of the Paper Industry for Air and Stream Improvement, Inc., New York, NY. July 1977.

5. Curtis, F., and G.D. McAlister. Development and Evaluation of an Oxidation/Method 6 TRS Emission Sampling Procedure. Emission Measurement Branch, Emission Standards and Engineering Division, U.S. Environmental Protection Agency, Research Triangle Park, NC 27711. February 1980.

6. Gellman, I. A Laboratory and Field Study of Reduced Sulfur Sampling and Monitoring Systems. National Council of the Paper Industry for Air and Stream Improvement, Inc., New York, NY. Atmospheric Quality Improvement Technical Bulletin No. 81. October 1975.

7. Margeson, J.H., J.E. Knoll, and M.R. Midgett. A Manual Method for TRS Determination. Draft Available from the authors. Source Branch, Quality Assurance Division, U.S. Environmental Protection Agency, Research Triangle Park, NC 27711.

8. National Council of the Paper Industry for Air and Stream Improvement. An Investigation of H_2S and SO_2 Calibration Cylinder Gas Stability and Their Standardization

Using Wet Chemical Techniques. Special Report 76–06. New York, NY. August 1976.

9. National Council of the Paper Industry for Air and Stream Improvement. Wet Chemical Method for Determining the H_2S Concentration of Calibration Cylinder Gases. Technical Bulletin Number 450. New York, NY. January 1985. 23 p.

10. National Council of the Paper Industry for Air and Stream Improvement. Modified Wet Chemcial Method for Determining the H_2S Concentration of Calibration Cylinder Gases. Draft Report. New York, NY. March 1987. 29 p.

METHOD 16B—DETERMINATION OF TOTAL REDUCED SULFUR EMISSIONS FROM STATIONARY SOURCES

1. *Applicability, Principle, Range and Sensitivity, Interferences, and Precision and Accuracy*

1.1 *Applicability.* This method is applicable to the determination of total reduced sulfur (TRS) emissions from recovery furnaces, lime kilns, and smelt dissolving tanks at kraft pulp mills, and from other sources when specified in an applicable subpart of the regulations. The TRS compounds include hydrogen sulfide (H_2S), methyl mercaptan, dimethyl sulfide, and dimethyl disulfide.

The flue gas must contain at least 1 percent oxygen for complete oxidation of all TRS to sulfur dioxide (SO_2).

1.2 *Principle.* An integrated gas sample is extracted from the stack. The SO_2 is removed selectively from the sample using a citrate buffer solution. The TRS compounds are then thermally oxidized to SO_2 and analyzed as SO_2 by gas chromatography (GC) using flame photometric detection (FPD).

1.3 *Range and Sensitivity.* Coupled with a GC utilizing a 1-ml sample size, the maximum limit of the FPD for SO_2 is approximately 10 ppm. This limit is expanded by dilution of the sample gas before analysis or by reducing the sample aliquot size. For sources with emission levels between 10 and 100 ppm, the measuring range can be best extended by reducing the sample size.

1.4 *Interferences.* The TRS compounds other than those regulated by the emission standards, if present, may be measured by this method. Therefore, carbonyl sulfide, which is partially oxidized to SO_2 and may be present in a lime kiln exit stack, would be a positive interferent.

Particulate matter from the lime kiln stack gas (primarily calcium carbonate) can cause a negative bias if it is allowed to enter the citrate scrubber; the particulate matter will cause the pH to rise and H_2S to be absorbed before oxidation. Proper use of the particulate filter, described in Section 2.1.3 of Method 16A, will eliminate this interference.

Carbon monoxide (CO) and carbon dioxide (CO_2) have substantial desensitizing effects on the FPD even after dilution. Acceptable systems must demonstrate that they have eliminated this interference by some procedure such as eluting these compounds before the SO_2. Compliance with this requirement can be demonstrated by submitting chromatograms of calibration gases with and without CO_2 in diluent gas. The CO_2 level should be approximately 10 percent for the case with CO_2 present. The two chromatograms should show agreement within the precision limits of Section 1.5.

1.5 *Precision and Accuracy.* The GC/FPD and dilution calibration precision and drift, and the system calibration accuracy are the same as in Method 16, Sections 4.1 to 4.3.

Field tests between this method and Method 16A showed an average difference of less than 4.0 percent. This difference was not determined to be significant.

2. *Apparatus*

2.1 *Sampling.* A sampling train is shown in Figure 16B–1. Modifications to the apparatus are accepted provided the system performance check is met.

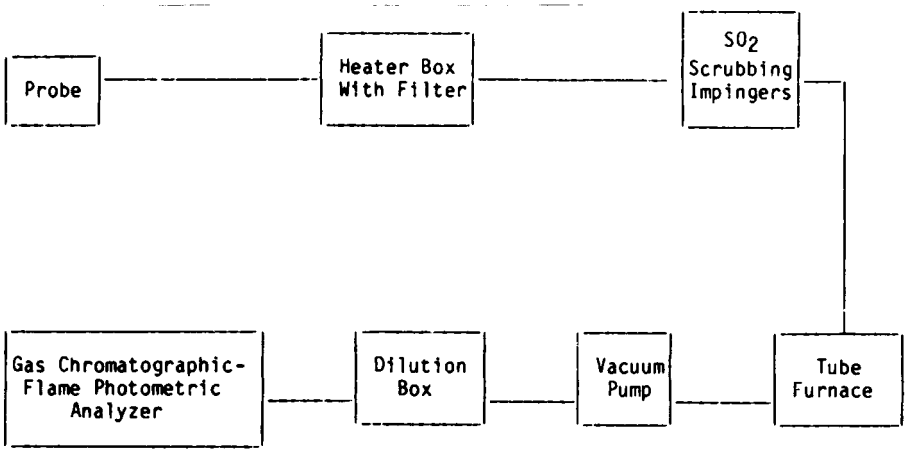

Figure 16B-1. Sampling train.

2.1.1 *Probe, Probe Brush, Particulate Filter, SO_2 Scrubber, Combustion Tube, and Furnace.* Same as in Method 16A, Sections 2.1.1 to 2.1.6.

2.1.2 *Sampling Pump.* Leakless Teflon-coated diaphragm type or equivalent.

2.2 *Analysis.*

2.2.1 *Dilution System (optional), Gas Chromatograph, Oven, Temperature Gauges, Flow System, Flame Photometric Detector, Electrometer, Power Supply, Recorder, Calibration System, Tube Chamber, Flow System, and Constant Temperature Bath.* Same as in Method 16, Sections 5.2, 5.4, and 5.5.

2.2.2 *Gas Chromatograph Columns.* Same as in Method 16, Section 12.1.4.1.1. Other columns with demonstrated ability to resolve SO_2 and be free from known interferences are acceptable alternatives.

3. *Reagents*

Same as in Method 16, Section 6, except the following:

3.1 *Calibration Gas.* SO_2 permeation tube gravimetrically calibrated and certified at some convenient operating temperature. These tubes consist of hermetically sealed FEP Teflon tubing in which a liquefied gaseous substance is enclosed. The enclosed gas permeates through the tubing wall at a constant rate. When the temperature is constant, calibration gases covering a wide range of known concentrations can be generated by varying and accurately measuring the flow rate of diluent gas passing over the tubes. In place of SO_2 permeation tubes, National Bureau of Standards traceable cylinder gases containing SO_2 in nitrogen may be used for calibration. The calibration gas is used to calibrate the GC/FPD system and the dilution system.

3.2 *Recovery Check Gas.* Hydrogen sulfide (100 ppm or less) in nitrogen, stored in aluminum cylinders. Verify the concentration by Method 11, the procedure discussed in Section 7.1 of Method 16A, or gas chromatography where the instrument is calibrated with an H_2S permeation tube as described below. For the wet-chemical methods, the standard deviation should not exceed 5 percent on at least three 20-minute runs.

Hydrogen sulfide recovery gas generated from a permeation device gravimetically calibrated and certified at some convenient operation temperature may be used. The permeation rate of the device must be such that at a dilution gas flow rate of 3 liters/min, an H_2S concentration in the range of the stack gas or within 20 percent of the standard can be generated.

3.3 *Combustion Gas.* Gas containing less than 50 ppb reduced sulfur compounds and less than 10 ppm total hydrocarbons. The gas may be generated from a clean-air system that purifies ambient air and consists of the following components: diaphragm pump, silica gel drying tube, activated charcoal tube, and flow rate measuring device. Gas from a compressed air cylinder is also acceptable.

4. *Pretest Procedures*

Same as in Method 16, Section 7.

5. *Calibration*

Same as in Method 16, Section 8, except SO_2 is used instead of H_2S.

6. *Sampling and Analysis Procedure*

6.1 *Sampling.* Before any source sampling is done, conduct a system performance check as detailed in Section 7.1 to validate the sampling train components and procedures. Although this test is optional, it would significantly reduce the possibility of rejecting tests as a result of failing the post-test performance check. At the completion of the pretest system performance check, insert the sampling probe into the test port making certain that no dilution air enters the stack through the port. Condition the entire system with sample for a minimum of 15 minutes before beginning analysis. If the sample is diluted, determine the precise dilution factor as in Section 8.5 of Method 16.

6.2 *Analysis.* Pass aliquots of diluted sample through the SO_2 scrubber and oxidation furnace, and then inject into the GC/FPD analyzer for analysis. The rest of the analysis is the same as in Method 16, Sections 9.2.1 and 9.2.2.

7. Post-Test Procedures

7.1 *System Performance Check.* Same as in Method 16A, Section 4.3. Sufficient numbers of sample injections should be made so that the precision requirements of Section 4.1 of Method 16 are satisfied.

7.2 *Recalibration.* Same as in Method 16, Section 10.2.

7.3 *Determination of Calibration Drift.* Same as in Method 16, Section 10.3.

8. Calculations

8.1 *Nomenclature.*

C_{SO2} = Sulfur dioxide concentration, ppm.
C_{TRS} = Total reduced sulfur concentration as determined by Equation 16B–1, ppm.
d = Dilution factor, dimensionless.
N = Number of samples.

8.2 SO_2 *Concentration.* Determine the concentration of SO_2 (C_{SO2}) directly from the calibration curves. Alternatively, the concentration may be calculated using the equation for the least-squares line.

8.3 *TRS Concentration.*

$$C_{TRS} = (C_{SO2})\,(d) \qquad \text{Eq. 16B–1}$$

8.4 *Average TRS Concentration.*

$$\text{Avg. } C_{TRS} = \frac{\sum_{i=1}^{n} C_{TRS}}{N} \qquad \text{Eq. 16B-2}$$

9. *Example System*

Same as in Method 16, Section 12. Single column systems using the column in Section 12.1.4.1.1 of Method 16 or a 7-ft Carbosorb B HT 100 column have been found satisfactory in resolving SO_2 from CO_2.

10. *Bibliography*

1. Same as in Method 16, Sections 13.1 to 13.6.

2. National Council of the Paper Industry for Air and Stream Improvement, Inc. A Study of TRS Measurement Methods. Technical Bulletin No. 434. New York, NY. May 1984. 12 p.

3. Margeson, J.H., J.E. Knoll, and M.R. Midgett. A Manual Method for TRS Determination. Draft available from the authors. Source Branch, Quality Assurance Division, U.S. Environmental Protection Agency, Research Triangle Park, NC 27711.

METHOD 17—DETERMINATION OF PARTICULATE EMISSIONS FROM STATIONARY SOURCES (IN-STACK FILTRATION METHOD)

Introduction

Particulate matter is not an absolute quantity; rather, it is a function of temperature and pressure. Therefore, to prevent variability in particulate matter emission regulations and/or associated test methods, the temperature and pressure at which particulate matter is to be measured must be carefully defined. Of the two variables (i.e., temperature and pressure), temperature has the greater effect upon the amount of particulate matter in an effluent gas stream; in most stationary source categories, the effect of pressure appears to be negligible.

In Method 5, 250 °F is established as a nominal reference temperature. Thus, where Method 5 is specified in an applicable subpart of the standards, particulate matter is defined with respect to temperature. In order to maintain a collection temperature of 250 °F, Method 5 employs a heated glass sample probe and a heated filter holder. This equipment is somewhat cumbersome and requires care in its operation. Therefore, where particulate matter concentrations (over the normal range of temperature associated with a specified source category) are known to be independent of temperature, it is desirable to eliminate the glass probe and heating systems, and sample at stack temperature.

This method describes an in-stack sampling system and sampling procedures for use in such cases. It is intended to be used only when specified by an applicable subpart of the standards, and only within the applicable temperature limits (if specified), or when otherwise approved by the Administrator.

1. *Principle and Applicability*

1.1 Principle. Particulate matter is withdrawn isokinetically from the source and collected on a glass fiber filter maintained at stack temperature. The particulate mass is determined gravimetrically after removal of uncombined water.

1.2 Applicability. This method applies to the determination of particulate emissions from stationary sources for determining compliance with new source performance standards, only when specifically provided for in an applicable subpart of the standards. This method is not applicable to stacks that contain liquid droplets or are saturated with water vapor. In addition, this method shall

not be used as written if the projected cross-sectional area of the probe extension-filter holder assembly covers more than 5 percent of the stack cross-sectional area (see Section 4.1.2).

2. *Apparatus*

2.1 Sampling Train. A schematic of the sampling train used in this method is shown in Figure 17–1. Construction details for many, but not all, of the train components are given in APTD–0581 (Citation 2 in Bibliography); for changes from the APTD–0581 document and for allowable modifications to Figure 17–1, consult with the Administrator.

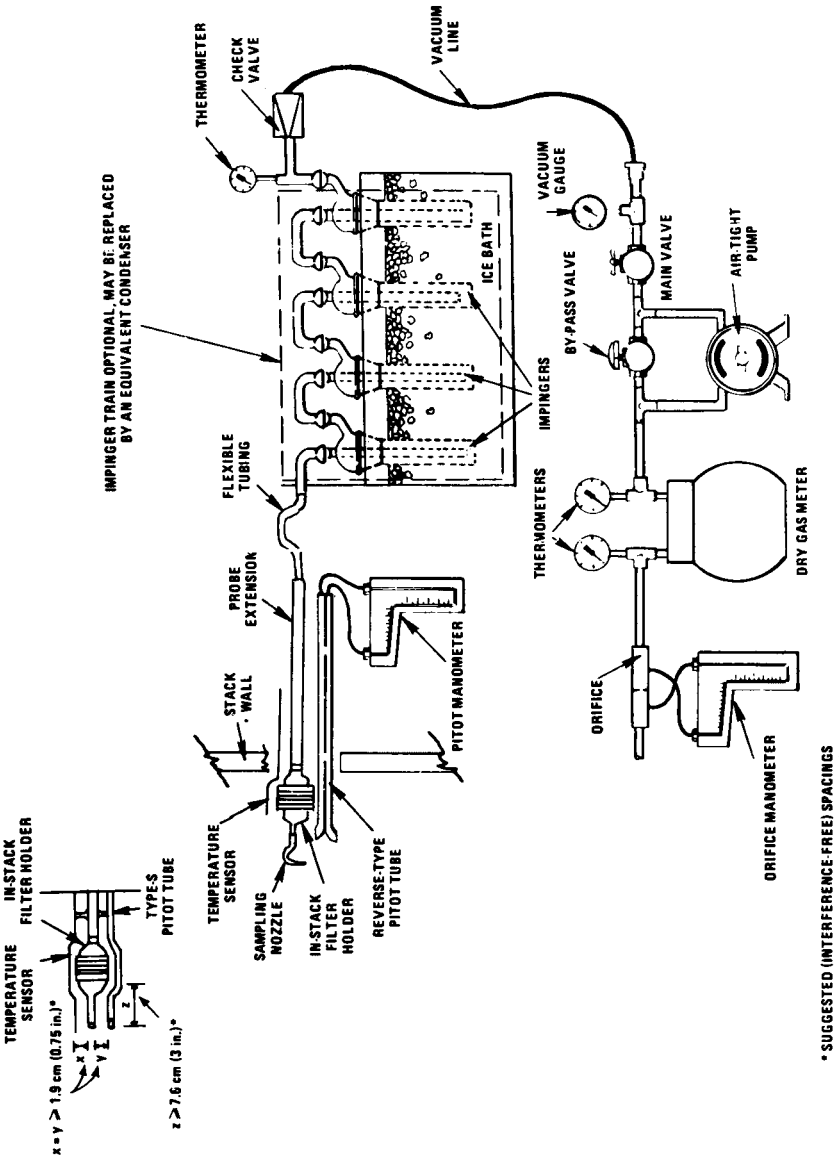

Figure 17-1. Particulate-Sampling Train, Equipped with In-Stack Filter.

The operating and maintenance procedures for many of the sampling train components are described in APTD–0576 (Citation 3 in Bibliography). Since correct usage is important in obtaining valid results, all users should read the APTD–0576 document and adopt the operating and maintenance procedures outlined in it, unless otherwise specified herein. The sampling train consists of the following components:

2.1.1 Probe Nozzle. Stainless steel (316) or glass, with sharp, tapered leading edge. The angle of taper shall be 30° and the taper shall be on the outside to preserve a constant internal diameter. The probe nozzle shall be of the button-hook or elbow design, unless otherwise specified by the Administrator. If made of stainless steel, the nozzle shall be constructed from seamless tubing. Other materials of construction may be used subject to the approval of the Administrator.

A range of sizes suitable for isokinetic sampling should be available, e.g., 0.32 to 1.27 cm (⅛ to ½ in.)—or larger if higher volume sampling trains are used—inside diameter (ID) nozzles in increments of 0.16 cm (1/16 in.). Each nozzle shall be calibrated according to the procedures outlined in Section 5.1.

2.1.2 Filter Holder. The in-stack filter holder shall be constructed of borosilicate or quartz glass, or stainless steel; if a gasket is used, it shall be made of silicone rubber, Teflon, or stainless steel. Other holder and gasket materials may be used subject to the approval of the Administrator. The filter holder shall be designed to provide a positive seal against leakage from the outside or around the filter.

2.1.3 Probe Extension. Any suitable rigid probe extension may be used after the filter holder.

2.1.4 Pitot Tube. Type S, as described in Section 2.1 of Method 2, or other device approved by the Administrator; the pitot tube shall be attached to the probe extension to allow constant monitoring of the stack gas velocity (see Figure 17–1). The impact (high pressure) opening plane of the pitot tube shall be even with or above the nozzle entry plane during sampling (see Method 2, Figure 2–6b). It is recommended: (1) that the pitot tube have a known baseline coefficient, determined as outlined in Section 4 of Method 2; and (2) that this known coefficient be preserved by placing the pitot tube in an interference-free arrangement with respect to the sampling nozzle, filter holder, and temperature sensor (see Figure 17–1). Note that the 1.9 cm (0.75 in.) free-space between the nozzle and pitot tube shown in Figure 17–1, is based on a 1.3 cm (0.5 in.) ID nozzle. If the sampling train is designed for sampling at higher flow rates than that described in APTD–0581, thus necessitating the use of larger sized nozzles, the free-space shall be 1.9 cm (0.75 in.) with the largest sized nozzle in place.

Source-sampling assemblies that do not meet the minimum spacing requirements of Figure 17–1 (or the equivalent of these requirements, e.g., Figure 2–7 of Method 2) may be used; however, the pitot tube coefficients of such assemblies shall be determined by calibration, using methods subject to the approval of the Administrator.

2.1.5 Differential Pressure Gauge. Inclined manometer or equivalent device (two), as described in Section 2.2 of Method 2. One manometer shall be used for velocity head (Δp) readings, and the other, for orifice differential pressure readings.

2.1.6 Condenser. It is recommended that the impinger system described in Method 5 be used to determine the moisture content of the stack gas. Alternatively, any system that allows measurement of both the water condensed and the moisture leaving the condenser, each to within 1 ml or 1 g, may be used. The moisture leaving the condenser can be measured either by: (1) monitoring the temperature and pressure at the exit of the condenser and using Dalton's law of partial pressures; or (2) passing the sample gas stream through a silica gel trap with exit gases kept below 20 °C (68 °F) and determining the weight gain.

Flexible tubing may be used between the probe extension and condenser. If means other than silica gel are used to determine the amount of moisture leaving the condenser, it is recommended that silica gel still be used between the condenser system and pump to prevent moisture condensation in the pump and metering devices and to avoid the need to make corrections for moisture in the metered volume.

2.1.7 Metering System. Vacuum gauge, leak-free pump, thermometers capable of measuring temperature to within 3 °C (5.4 °F), dry gas meter capable of measuring volume to within 2 percent, and related equipment, as shown in Figure 17–1. Other metering systems capable of maintaining sampling rates within 10 percent of isokinetic and of determining sample volumes to within 2 percent may be used, subject to the approval of the Administrator. When the metering system is used in conjunction with a pitot tube, the system shall enable checks of isokinetic rates.

Sampling trains utilizing metering systems designed for higher flow rates than that described in APTD–0581 or APTD–0576 may be used provided that the specifications of this method are met.

2.1.8 Barometer. Mercury, aneroid, or other barometer capable of measuring atmospheric pressure to within 2.5 mm Hg (0.1 in. Hg). In many cases, the barometric reading may be obtained from a nearby National Weather Service station, in which case the station value (which is the absolute barometric pressure) shall be requested and an adjustment for elevation differences between

the weather station and sampling point shall be applied at a rate of minus 2.5 mm Hg (0.1 in. Hg) per 30 m (100 ft) elevation increase or vice versa for elevation decrease.

2.1.9 Gas Density Determination Equipment. Temperature sensor and pressure gauge, as described in Sections 2.3 and 2.4 of Method 2, and gas analyzer, if necessary, as described in Method 3.

The temperature sensor shall be attached to either the pitot tube or to the probe extension, in a fixed configuration. If the temperature sensor is attached in the field, the sensor shall be placed in an interference-free arrangement with respect to the Type S pitot tube openings (as shown in Figure 17–1 or in Figure 2–7 of Method 2). Alternatively, the temperature sensor need not be attached to either the probe extension or pitot tube during sampling, provided that a difference of not more than 1 percent in the average velocity measurement is introduced. This alternative is subject to the approval of the Administrator.

2.2 Sample Recovery.

2.2.1 Probe Nozzle Brush. Nylon bristle brush with stainless steel wire handle. The brush shall be properly sized and shaped to brush out the probe nozzle.

2.2.2 Wash Bottles—Two. Glass wash bottles are recommended; polyethylene wash bottles may be used at the option of the tester. It is recommended that acetone not be stored in polyethylene bottles for longer than a month.

2.2.3 Glass Sample Storage Containers. Chemically resistant, borosilicate glass bottles, for acetone washes, 500 ml or 1000 ml. Screw cap liners shall either be rubber-backed Teflon or shall be constructed so as to be leak-free and resistant to chemical attack by acetone. (Narrow mouth glass bottles have been found to be less prone to leakage.) Alternatively, polyethylene bottles may be used.

2.2.4 Petri Dishes. For filter samples; glass or polyethylene, unless otherwise specified by the Administrator.

2.2.5 Graduated Cylinder and/or Balance. To measure condensed water to within 1 ml or 1 g. Graduated cylinders shall have subdivisions no greater than 2 ml. Most laboratory balances are capable of weighing to the nearest 0.5 g or less. Any of these balances is suitable for use here and in Section 2.3.4.

2.2.6 Plastic Storage Containers. Air tight containers to store silica gel.

2.2.7 Funnel and Rubber Policeman. To aid in transfer of silica gel to container; not necessary if silica gel is weighed in the field.

2.2.8 Funnel. Glass or polyethylene, to aid in sample recovery.

2.3 Analysis.

2.3.1 Glass Weighing Dishes.

2.3.2 Desiccator.

2.3.3 Analytical Balance. To measure to within 0.1 mg.

2.3.4 Balance. To measure to within 0.5 mg.

2.3.5 Beakers. 250 ml.

2.3.6 Hygrometer. To measure the relative humidity of the laboratory environment.

2.3.7 Temperature Gauge. To measure the temperature of the laboratory environment.

3. *Reagents*

3.1 Sampling.

3.1.1 Filters. The in-stack filters shall be glass mats or thimble fiber filters, without organic binders, and shall exhibit at least 99.95 percent efficiency (0.05 percent penetration) on 0.3 micron dioctyl phthalate smoke particles. The filter efficiency tests shall be conducted in accordance with ASTM Standard Method D2986–71 (Reapproved 1978) (incorporated by reference—see §60.17). Test data from the supplier's quality control program are sufficient for this purpose.

3.1.2 Silica Gel. Indicating type, 6- to 16-mesh. If previously used, dry at 175 °C (350 °F) for 2 hours. New silica gel may be used as received. Alternatively, other types of desiccants (equivalent or better) may be used, subject to the approval of the Administrator.

3.1.3 Crushed Ice.

3.1.4 Stopcock Grease. Acetone-insoluble, heat-stable silicone grease. This is not necessary if screw-on connectors with Teflon sleeves, or similar, are used. Alternatively, other types of stopcock grease may be used, subject to the approval of the Administrator.

3.1.5 Water. Same as in Method 5, section 3.1.3.

3.2 Sample Recovery. Acetone, reagent grade, 0.001 percent residue, in glass bottles. Acetone from metal containers generally has a high residue blank and should not be used. Sometimes, suppliers transfer acetone to glass bottles from metal containers. Thus, acetone blanks shall be run prior to field use and only acetone with low blank values (0.001 percent) shall be used. In no case shall a blank value of greater than 0.001 percent of the weight of acetone used be subtracted from the sample weight.

3.3 Analysis.

3.3.1 Acetone. Same as 3.2.

3.3.2 Desiccant. Anhydrous calcium sulfate, indicating type. Alternatively, other types of desiccants may be used, subject to the approval of the Administrator.

4. *Procedure*

4.1 Sampling. The complexity of this method is such that, in order to obtain reliable results, testers should be trained and experienced with the test procedures.

4.1.1 Pretest Preparation. All components shall be maintained and calibrated according to the procedure described in APTD–0576, unless otherwise specified herein.

Weigh several 200 to 300 g portions of silica gel in air-tight containers to the nearest 0.5 g. Record the total weight of the silica gel

plus container, on each container. As an alternative, the silica gel need not be preweighed, but may be weighed directly in its impinger or sampling holder just prior to train assembly.

Check filters visually against light for irregularities and flaws or pinhole leaks. Label filters of the proper size on the back side near the edge using numbering machine ink. As an alternative, label the shipping containers (glass or plastic petri dishes) and keep the filters in these containers at all times except during sampling and weighing.

Desiccate the filters at 20±5.6 °C (68±10 °F) and ambient pressure for at least 24 hours and weigh at intervals of at least 6 hours to a constant weight, i.e., 0.5 mg change from previous weighing; record results to the nearest 0.1 mg. During each weighing the filter must not be exposed to the laboratory atmosphere for a period greater than 2 minutes and a relative humidity above 50 percent. Alternatively (unless otherwise specified by the Administrator), the filters may be oven dried at 105 °C (220 °F) for 2 to 3 hours, desiccated for 2 hours, and weighed. Procedures other than those described, which account for relative humidity effects, may be used, subject to the approval of the Administrator.

4.1.2 Preliminary Determinations. Select the sampling site and the minimum number of sampling points according to Method 1 or as specified by the Administrator. Make a projected-area model of the probe extension-filter holder assembly, with the pitot tube face openings positioned along the centerline of the stack, as shown in Figure 17–2. Calculate the estimated cross-section blockage, as shown in Figure 17–2. If the blockage exceeds 5 percent of the duct cross sectional area, the tester has the following options: (1) a suitable out-of-stack filtration method may be used instead of in-stack filtration; or (2) a special in-stack arrangement, in which the sampling and velocity measurement sites are separate, may be used; for details concerning this approach, consult with the Administrator (see also Citation 10 in Bibliography). Determine the stack pressure, temperature, and the range of velocity heads using Method 2; it is recommended that a leak-check of the pitot lines (see Method 2, Section 3.1) be performed. Determine the moisture content using Approximation Method 4 or its alternatives for the purpose of making isokinetic sampling rate settings. Determine the stack gas dry molecular weight, as described in Method 2, Section 3.6; if integrated Method 3 sampling is used for molecular weight determination, the integrated bag sample shall be taken simultaneously with, and for the same total length of time as, the particulate sample run.

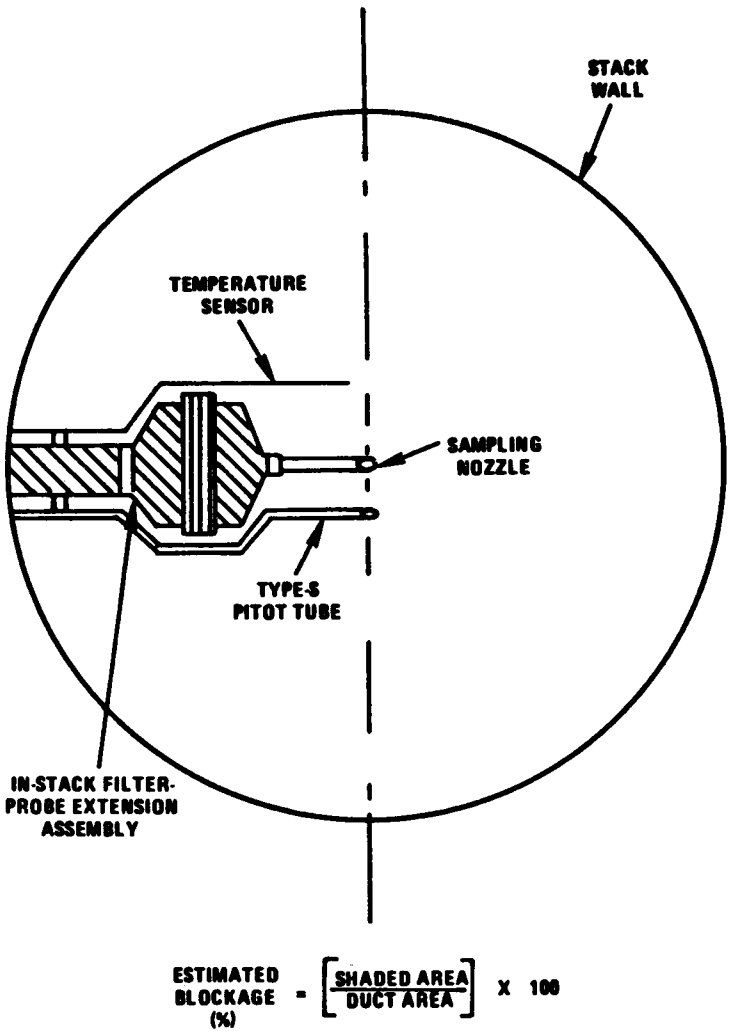

Figure 17-2. Projected-area model of cross-section blockage (approximate average for a sample traverse) caused by an in-stack filter holder-probe extension assembly.

Select a nozzle size based on the range of velocity heads, such that it is not necessary to change the nozzle size in order to maintain isokinetic sampling rates. During the run, do not change the nozzle size. Ensure that the proper differential pressure gauge is chosen for the range of velocity heads encountered (see Section 2.2 of Method 2).

Select a probe extension length such that all traverse points can be sampled. For large stacks, consider sampling from opposite

sides of the stack to reduce the length of probes.

Select a total sampling time greater than or equal to the minimum total sampling time specified in the test procedures for the specific industry such that (1) the sampling time per point is not less than 2 minutes (or some greater time interval if specified by the Administrator), and (2) the sample volume taken (corrected to standard conditions) will exceed the required minimum total gas sample volume. The latter is based on an approximate average sampling rate.

It is recommended that the number of minutes sampled at each point be an integer or an integer plus one-half minute, in order to avoid timekeeping errors.

In some circumstances, e.g., batch cycles, it may be necessary to sample for shorter times at the traverse points and to obtain smaller gas sample volumes. In these cases, the Administrator's approval must first be obtained.

4.1.3 Preparation of Collection Train. During preparation and assembly of the sampling train, keep all openings where contamination can occur covered until just prior to assembly or until sampling is about to begin.

If impingers are used to condense stack gas moisture, prepare them as follows: place 100 ml of water in each of the first two impingers, leave the third impinger empty, and transfer approximately 200 to 300 g of preweighed silica gel from its container to the fourth impinger. More silica gel may be used, but care should be taken to ensure that it is not entrained and carried out from the impinger during sampling. Place the container in a clean place for later use in the sample recovery. Alternatively, the weight of the silica gel plus impinger may be determined to the nearest 0.5 g and recorded.

If some means other than impingers is used to condense moisture, prepare the condenser (and, if appropriate, silica gel for condenser outlet) for use.

Using a tweezer or clean disposable surgical gloves, place a labeled (identified) and weighed filter in the filter holder. Be sure that the filter is properly centered and the gasket properly placed so as not to allow the sample gas stream to circumvent the filter. Check filter for tears after assembly is completed. Mark the probe extension with heat resistant tape or by some other method to denote the proper distance into the stack or duct for each sampling point.

Assemble the train as in Figure 17–1, using a very light coat of silicone grease on all ground glass joints and greasing only the outer portion (see APTD–0576) to avoid possibility of contamination by the silicone grease. Place crushed ice around the impingers.

4.1.4 Leak Check Procedures.

4.1.4.1 Pretest Leak-Check. A pretest leak-check is recommended, but not required. If the tester opts to conduct the pretest leak-check, the following procedure shall be used.

After the sampling train has been assembled, plug the inlet to the probe nozzle with a material that will be able to withstand the stack temperature. Insert the filter holder into the stack and wait approximately 5 minutes (or longer, if necessary) to allow the system to come to equilibrium with the temperature of the stack gas stream. Turn on the pump and draw a vacuum of at least 380 mm Hg (15 in. Hg); note that a lower vacuum may be used, provided that it is not exceeded during the test. Determine the leakage rate. A leakage rate in excess of 4 percent of the average sampling rate or 0.00057 m^3/min. (0.02 cfm), whichever is less, is unacceptable.

The following leak-check instructions for the sampling train described in APTD–0576 and APTD–0581 may be helpful. Start the pump with by-pass valve fully open and coarse adjust valve completely closed. Partially open the coarse adjust valve and slowly close the by-pass valve until the desired vacuum is reached. Do not reverse direction of by-pass valve. If the desired vacuum is exceeded, either leak-check at this higher vacuum or end the leak-check as shown below and start over.

When the leak-check is completed, first slowly remove the plug from the inlet to the probe nozzle and immediately turn off the vacuum pump. This prevents water from being forced backward and keeps silica gel from being entrained backward.

4.1.4.2 Leak-Checks During Sample Run. If, during the sampling run, a component (e.g., filter assembly or impinger) change becomes necessary, a leak-check shall be conducted immediately before the change is made. The leak-check shall be done according to the procedure outlined in Section 4.1.4.1 above, except that it shall be done at a vacuum equal to or greater than the maximum value recorded up to that point in the test. If the leakage rate is found to be no greater than 0.00057 m^3/min (0.02 cfm) or 4 percent of the average sampling rate (whichever is less), the results are acceptable, and no correction will need to be applied to the total volume of dry gas metered; if, however, a higher leakage rate is obtained, the tester shall either record the leakage rate and plan to correct the sample volume as shown in Section 6.3 of this method, or shall void the sampling run.

Immediately after component changes, leak-checks are optional; if such leak-checks are done, the procedure outlined in Section 4.1.4.1 above shall be used.

4.1.4.3 Post-Test Leak-Check. A leak-check is mandatory at the conclusion of each sampling run. The leak-check shall be done in accordance with the procedures outlined

in Section 4.1.4.1, except that it shall be conducted at a vacuum equal to or greater than the maximum value reached during the sampling run. If the leakage rate is found to be no greater than 0.00057 m^3/min (0.02 cfm) or 4 percent of the average sampling rate (whichever is less), the results are acceptable, and no correction need be applied to the total volume of dry gas metered. If, however, a higher leakage rate is obtained, the tester shall either record the leakage rate and correct the sample volume as shown in Section 6.3 of this method, or shall void the sampling run.

4.1.5 Particulate Train Operation. During the sampling run, maintain a sampling rate such that sampling is within 10 percent of true isokinetic, unless otherwise specified by the Administrator.

For each run, record the data required on the example data sheet shown in Figure 17–3. Be sure to record the initial dry gas meter reading. Record the dry gas meter readings at the beginning and end of each sampling time increment, when changes in flow rates are made, before and after each leak check, and when sampling is halted. Take other readings required by Figure 17–3 at least once at each sample point during each time increment and additional readings when significant changes (20 percent variation in velocity head readings) necessitate additional adjustments in flow rate. Level and zero the manometer. Because the manometer level and zero may drift due to vibrations and temperature changes, make periodic checks during the traverse.

FIGURE 17–3—PARTICULATE FIELD DATA

Plant .....
Location .....
Operator .....
Date .....
Run No .....
Sample box No .....
Meter box No .....
Meter Δ H@ .....
C factor.
Pitot tube coefficient, Cp.

Barometric pressure .....
Assumed moisture, % .....
Probe extension length, m (ft.) .....
Nozzle identification No. .....
Average calibrated nozzle diameter cm (in.) .....
Filter No. .....
Leak rate, m^3/min, (cfm) .....
Static pressure, mm Hg (in. Hg) .....

.

SCHEMATIC OF STACK CROSS SECTION

Traverse point number	Sampling time	Vacuum	Stack temperature (T_S)	Velocity head (Δ P)	Pressure differential-across orifice meter	Gas sample volume	Gas sample temperature at dry gas meter		Temperature of gas leaving condenser or last impinger
							Inlet	Outlet	
	(θ), min.	mm Hg (in. Hg)	°C (°F)	mm H_20 (in H_20)	mm H_20 (in H_20)	m^3 (ft^3)	°C (°F)	°C (°F)	°C (°F)
Total									
Average									

Clean the portholes prior to the test run to minimize the chance of sampling the deposited material. To begin sampling, remove the nozzle cap and verify that the pitot tube and probe extension are properly positioned. Position the nozzle at the first traverse point with the tip pointing directly into the gas stream. Immediately start the pump and adjust the flow to isokinetic conditions. Nomographs are available, which aid in the rapid adjustment to the isokinetic sampling rate without excessive computations. These nomographs are designed for use when the Type S pitot tube coefficient is 0.85±0.02, and the stack gas equivalent density (dry molecular weight) is equal to 29±4. APTD–0576 details the procedure for using the nomographs. If C_p and M_d are outside the above stated ranges, do not use the nomographs unless appropriate steps (see Citation 7 in Bibliography) are taken to compensate for the deviations.

When the stack is under significant negative pressure (height of impinger stem), take care to close the coarse adjust valve before inserting the probe extension assembly into the stack to prevent water from being forced backward. If necessary, the pump may be turned on with the coarse adjust valve closed.

When the probe is in position, block off the openings around the probe and porthole to prevent unrepresentative dilution of the gas stream.

Traverse the stack cross section, as required by Method 1 or as specified by the Administrator, being careful not to bump the probe nozzle into the stack walls when sampling near the walls or when removing or inserting the probe extension through the portholes, to minimize chance of extracting deposited material.

During the test run, take appropriate steps (e.g., adding crushed ice to the impinger ice bath) to maintain a temperature of less than 20 °C (68 °F) at the condenser outlet; this will prevent excessive moisture losses. Also, periodically check the level and zero of the manometer.

If the pressure drop across the filter becomes too high, making isokinetic sampling difficult to maintain, the filter may be replaced in the midst of a sample run. It is recommended that another complete filter holder assembly be used rather than attempting to change the filter itself. Before a new filter holder is installed, conduct a leak check, as outlined in Section 4.1.4.2. The total particulate weight shall include the summation of all filter assembly catches.

A single train shall be used for the entire sample run, except in cases where simultaneous sampling is required in two or more separate ducts or at two or more different locations within the same duct, or, in cases where equipment failure necessitates a change of trains. In all other situations, the use of two or more trains will be subject to the approval of the Administrator. Note that when two or more trains are used, a separate analysis of the collected particulate from each train shall be performed, unless identical nozzle sizes were used on all trains, in which case the particulate catches from the individual trains may be combined and a single analysis performed.

At the end of the sample run, turn off the pump, remove the probe extension assembly from the stack, and record the final dry gas meter reading. Perform a leak-check, as outlined in Section 4.1.4.3. Also, leak-check the pitot lines as described in Section 3.1 of Method 2; the lines must pass this leak-check, in order to validate the velocity head data.

4.1.6 Calculation of Percent Isokinetic. Calculate percent isokinetic (see Section 6.11) to determine whether another test run should be made. If there is difficulty in maintaining isokinetic rates due to source conditions, consult with the Administrator for possible variance on the isokinetic rates.

4.2 Sample Recovery. Proper cleanup procedure begins as soon as the probe extension assembly is removed from the stack at the end of the sampling period. Allow the assembly to cool.

When the assembly can be safely handled, wipe off all external particulate matter near the tip of the probe nozzle and place a cap over it to prevent losing or gaining particulate matter. Do not cap off the probe tip tightly while the sampling train is cooling down as this would create a vacuum in the filter holder, forcing condenser water backward.

Before moving the sample train to the cleanup site, disconnect the filter holder-probe nozzle assembly from the probe extension; cap the open inlet of the probe extension. Be careful not to lose any condensate, if present. Remove the umbilical cord from the condenser outlet and cap the outlet. If a flexible line is used between the first impinger (or condenser) and the probe extension, disconnect the line at the probe extension and let any condensed water or liquid drain into the impingers or condenser. Disconnect the probe extension from the condenser; cap the probe extension outlet. After wiping off the silicone grease, cap off the condenser inlet. Ground glass stoppers, plastic caps, or serum caps (whichever are appropriate) may be used to close these openings.

Transfer both the filter holder-probe nozzle assembly and the condenser to the cleanup area. This area should be clean and protected from the wind so that the chances of contaminating or losing the sample will be minimized.

Save a portion of the acetone used for cleanup as a blank. Take 200 ml of this acetone directly from the wash bottle being

used and place it in a glass sample container labeled ''acetone blank.''

Inspect the train prior to and during disassembly and note any abnormal conditions. Treat the samples as follows:

Container No. 1. Carefully remove the filter from the filter holder and place it in its identified petri dish container. Use a pair of tweezers and/or clean disposable surgical gloves to handle the filter. If it is necessary to fold the filter, do so such that the particulate cake is inside the fold. Carefully transfer to the petri dish any particulate matter and/or filter fibers which adhere to the filter holder gasket, by using a dry Nylon bristle brush and/or a sharp-edged blade. Seal the container.

Container No. 2. Taking care to see that dust on the outside of the probe nozzle or other exterior surfaces does not get into the sample, quantitatively recover particulate matter or any condensate from the probe nozzle, fitting, and front half of the filter holder by washing these components with acetone and placing the wash in a glass container. Distilled water may be used instead of acetone when approved by the Administrator and shall be used when specified by the Administrator; in these cases, save a water blank and follow Administrator's directions on analysis. Perform the acetone rinses as follows:

Carefully remove the probe nozzle and clean the inside surface by rinsing with acetone from a wash bottle and brushing with a Nylon bristle brush. Brush until acetone rinse shows no visible particles, after which make a final rinse of the inside surface with acetone.

Brush and rinse with acetone the inside parts of the fitting in a similar way until no visible particles remain. A funnel (glass or polyethylene) may be used to aid in transferring liquid washes to the container. Rinse the brush with acetone and quantitatively collect these washings in the sample container. Between sampling runs, keep brushes clean and protected from contamination.

After ensuring that all joints are wiped clean of silicone grease (if applicable), clean the inside of the front half of the filter holder by rubbing the surfaces with a Nylon bristle brush and rinsing with acetone. Rinse each surface three times or more if needed to remove visible particulate. Make final rinse of the brush and filter holder. After all acetone washings and particulate matter are collected in the sample container, tighten the lid on the sample container so that acetone will not leak out when it is shipped to the laboratory. Mark the height of the fluid level to determine whether or not leakage occurred during transport. Label the container to clearly identify its contents.

Container No. 3. If silica gel is used in the condenser system for mositure content determination, note the color of the gel to determine if it has been completely spent; make a notation of its condition. Transfer the silica gel back to its original container and seal. A funnel may make it easier to pour the silica gel without spilling, and a rubber policeman may be used as an aid in removing the silica gel. It is not necessary to remove the small amount of dust particles that may adhere to the walls and are difficult to remove. Since the gain in weight is to be used for moisture calculations, do not use any water or other liquids to transfer the silica gel. If a balance is available in the field, follow the procedure for Container No. 3 under ''Analysis.''

Condenser Water. Treat the condenser or impinger water as follows: make a notation of any color or film in the liquid catch. Measure the liquid volume to within ±1 ml by using a graduated cylinder or, if a balance is available, determine the liquid weight to within ±0.5 g. Record the total volume or weight of liquid present. This information is required to calculate the moisture content of the effluent gas. Discard the liquid after measuring and recording the volume or weight.

4.3 Analysis. Record the data required on the example sheet shown in Figure 17–4. Handle each sample container as follows:

Container No. 1. Leave the contents in the shipping container or transfer the filter and any loose particulate from the sample container to a tared glass weighing dish. Desiccate for 24 hours in a desiccator containing anhydrous calcium sulfate. Weigh to a constant weight and report the results to the nearest 0.1 mg. For purposes of this Section, 4.3, the term ''constant weight'' means a difference of no more than 0.5 mg or 1 percent of total weight less tare weight, whichever is greater, between two consecutive weighings, with no less than 6 hours of desiccation time between weighings.

Alternatively, the sample may be oven dried at the average stack temperature or 105 °C (220 °F), whichever is less, for 2 to 3 hours, cooled in the desiccator, and weighed to a constant weight, unless otherwise specified by the Administrator. The tester may also opt to oven dry the sample at the average stack temperature or 105 °C (220 °F), whichever is less, for 2 to 3 hours, weigh the sample, and use this weight as a final weight.

FIGURE 17–4—ANALYTICAL DATA

Plant
Date
Run No.
Filter No.
Amount liquid lost during transport
Acetone blank volume, ml
Acetone wash volume, ml
Acetone blank concentration, mg/mg (Equation 17–4)
Acetone wash blank, mg (Equation 17–5)

Container number	Weight of particulate collected, mg		
	Final weight	Tare weight	Weight gain
1.			
2.			
Total.			
Less acetone blank.			
Weight of particulate matter.			

	Volume of liquid water collected	
	Impinger volume, ml	Silica gel weight, g
Final.		
Initial.		
Liquid collected.		
Total volume collected		g* ml

*Convert weight of water to volume by dividing total weight increase by density of water (1 g/ml).

$$\frac{\text{Increase, g}}{\text{(1 g/ml)}} = \text{Volume water, ml}$$

Container No. 2. Note the level of liquid in the container and confirm on the analysis sheet whether or not leakage occurred during transport. If a noticeable amount of leakage has occurred, either void the sample or use methods, subject to the approval of the Administrator, to correct the final results. Measure the liquid in this container either volumetrically to ±1 ml or gravimetrically to ±0.5 g. Transfer the contents to a tared 250-ml beaker and evaporate to dryness at ambient temperature and pressure. Desiccate for 24 hours and weigh to a constant weight. Report the results to the nearest 0.1 mg.

Container No. 3. This step may be conducted in the field. Weigh the spent silica gel (or silica gel plus impinger) to the nearest 0.5 g using a balance.

''Acetone Blank'' Container. Measure acetone in this container either volumetrically or gravimetrically. Transfer the acetone to a tared 250-ml beaker and evaporate to dryness at ambient temperature and pressure. Desiccate for 24 hours and weigh to a constant weight. Report the results to the nearest 0.1 mg.

NOTE: At the option of the tester, the contents of Container No. 2 as well as the acetone blank container may be evaporated at temperatures higher than ambient. If evaporation is done at an elevated temperature, the temperature must be below the boiling point of the solvent; also, to prevent ''bumping,'' the evaporation process must be closely supervised, and the contents of the beaker must be swirled occasionally to maintain an even temperature. Use extreme care, as acetone is highly flammable and has a low flash point.

5. *Calibration*

Maintain a laboratory log of all calibrations.

5.1 Probe Nozzle. Probe nozzles shall be calibrated before their initial use in the field. Using a micrometer, measure the inside diameter of the nozzle to the nearest 0.025 mm (0.001 in.). Make three separate measurements using different diameters each time, and obtain the average of the measurements. The difference between the high and low numbers shall not exceed 0.1 mm (0.004 in.). When nozzles become nicked, dented, or corroded, they shall be reshaped, sharpened, and recalibrated before use. Each nozzle shall be permanently and uniquely identified.

5.2 Pitot Tube. If the pitot tube is placed in an interference-free arrangement with respect to the other probe assembly components, its baseline (isolated tube) coefficient shall be determined as outlined in Section 4 of Method 2. If the probe assembly is not interference-free, the pitot tube assembly coefficient shall be determined by calibration, using methods subject to the approval of the Administrator.

5.3 Metering System. Before its initial use in the field, the metering system shall be calibrated according to the procedure outlined in APTD–0576. Instead of physically adjusting the dry gas meter dial readings to correspond to the wet test meter readings, calibration factors may be used to mathematically correct the gas meter dial readings to the proper values.

Before calibrating the metering system, it is suggested that a leak-check be conducted. For metering systems having diaphragm pumps, the normal leak-check procedure will not detect leakages within the pump. For these cases the following leak-check procedure is suggested: make a 10-minute calibration run at 0.00057 m^3/min (0.02 cfm); at the end of the run, take the difference of the measured wet test meter and dry gas meter volumes; divide the difference by 10, to get the leak rate. The leak rate should not exceed 0.00057 m^3/min (0.02 cfm).

After each field use, the calibration of the metering system shall be checked by performing three calibration runs at a single, intermediate orifice setting (based on the previous field test), with the vacuum set at the maximum value reached during the test series. To adjust the vacuum, insert a valve between the wet test meter and the inlet of the metering system. Calculate the average

value of the calibration factor. If the calibration has changed by more than 5 percent, recalibrate the meter over the full range of orifice settings, as outlined in APTD–0576.

Alternative procedures, e.g., using the orifice meter coefficients, may be used, subject to the approval of the Administrator.

NOTE: If the dry gas meter coefficient values obtained before and after a test series differ by more than 5 percent, the test series shall either be voided, or calculations for the test series shall be performed using whichever meter coefficient value (i.e., before or after) gives the lower value of total sample volume.

5.4 Temperature Gauges. Use the procedure in Section 4.3 of Method 2 to calibrate in-stack temperature gauges. Dial thermometers, such as are used for the dry gas meter and condenser outlet, shall be calibrated against mercury-in-glass thermometers.

5.5 Leak Check of Metering System Shown in Figure 17–1. That portion of the sampling train from the pump to the orifice meter should be leak checked prior to initial use and after each shipment. Leakage after the pump will result in less volume being recorded than is actually sampled. The following procedure is suggested (see Figure 17–5). Close the main valve on the meter box. Insert a one-hole rubber stopper with rubber tubing attached into the orifice exhaust pipe. Disconnect and vent the low side of the orifice manometer. Close off the low side orifice tap. Pressurize the system to 13 to 18 cm (5 to 7 in.) water column by blowing into the rubber tubing. Pinch off the tubing and observe the manometer for one minute. A loss of pressure on the manometer indicates a leak in the meter box; leaks, if present, must be corrected.

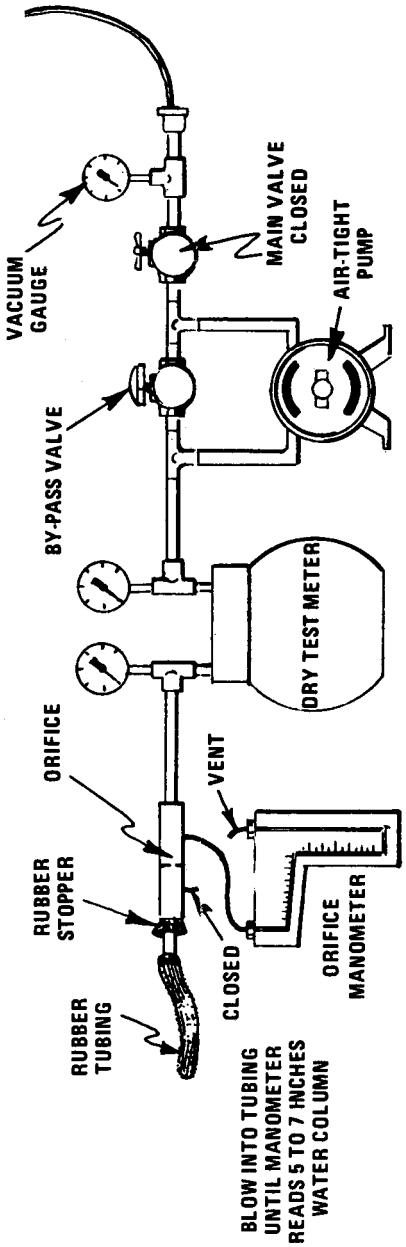

Figure 17-5. Leak check of meter box.

5.6 Barometer. Calibrate against a mercury barometer.

6. *Calculations*

Carry out calculations, retaining at least one extra decimal figure beyond that of the acquired data. Round off figures after the

final calculation. Other forms of the equations may be used as long as they give equivalent results.

6.1 Nomenclature.

A_n=Cross-sectional area of nozzle, m^2(ft^2).
B_{ws}=Water vapor in the gas stream, proportion by volume.
C_a=Acetone blank residue concentration, mg/mg.
c_s=Concentration of particulate matter in stack gas, dry basis, corrected to standard conditions, g/dscm (g/dscf).
I=Percent of isokinetic sampling.
L_a=Maximum acceptable leakage rate for either a pretest leak check or for a leak check following a component change; equal to 0.00057 m^3/min (0.02 cfm) or 4 percent of the average sampling rate, whichever is less.
L_i=Individual leakage rate observed during the leak check conducted prior to the "i^{th}" component change (i=1, 2, 3 . . . n), m^3/min (cfm).
L_p=Leakage rate observed during the post-test leak check, m^3/min (cfm).
m_a=Mass of residue of acetone after evaporation, mg.
m_n=Total amount of particulate matter collected, mg.
M_w=Molecular weight of water, 18.0 g/g-mole (18.0 lb/lb-mole).
P_{bar}=Barometric pressure at the sampling site, mm Hg (in. Hg).
P_s=Absolute stack gas pressure, mm Hg (in. Hg).
P_{std}=Standard absolute pressure, 760 mm Hg (29.92 in. Hg).
R=Ideal gas constant, 0.06236 mm Hg-m^3/°K-g-mole (21.85 in. Hg-ft^3/°R-lb-mole).
T_m=Absolute average dry gas meter temperature (see Figure 17–3), °K (°R).
T_s=Absolute average stack gas temperature (see Figure 17–3), °K (°R).
T_{std}=Standard absolute temperature, 293°K (528°R).
V_a=Volume of acetone blank, ml.
V_{aw}=Volume of acetone used in wash, ml.
V_{lc}=Total volume of liquid collected in impingers and silica gel (see Figure 17–4), ml.
V_m=Volume of gas sample as measured by dry gas meter, dcm (dcf).
$V_{m(std)}$=Volume of gas sample measured by the dry gas meter, corrected to standard conditions, dscm (dscf).
$V_{w(std)}$=Volume of water vapor in the gas sample, corrected to standard conditions, scm (scf).
v_s=Stack gas velocity, calculated by Method 2, Equation 2–9, using data obtained from Method 17, m/sec (ft/sec).
W_a=Weight of residue in acetone wash, mg.
Y=Dry gas meter calibration coefficient.
ΔH=Average pressure differential across the orifice meter (see Figure 17–3), mm H_2O (in. H_2O).
ρ_a=Density of acetone, mg/ml (see label on bottle).
ρ_w=Density of water, 0.9982 g/ml (0.002201 lb/ml).
θ=Total sampling time, min.
θ_1=Sampling time interval, from the beginning of a run until the first component change, min.
θ_i=Sampling time interval, between two successive component changes, beginning with the interval between the first and second changes, min.
θ_p=Sampling time interval, from the final (n^{th}) component change until the end of the sampling run, min.
13.6=Specific gravity of mercury.
60=Sec/min.
100=Conversion to percent.

6.2 Average Dry Gas Meter Temperature and Average Orifice Pressure Drop. See data sheet (Figure 17–3).

6.3 Dry Gas Volume. Correct the sample volume measured by the dry gas meter to standard conditions (20 °C, 760 mm Hg or 68 °F, 29.92 in. Hg) by using Equation 17–1.

$$V_{m(std)} = V_m Y \left(\frac{T_{std}}{T_m}\right)\left[\frac{P_{bar} + \frac{\Delta H}{13.6}}{P_{std}}\right]$$

$$= K_1 V_m Y \frac{P_{bar} + (\Delta H/13.6)}{T_m}$$

Eq. 17–1

Where:

K_1=0.3858°K/mm Hg for metric units; 17.64°R/in. Hg for English units.

NOTE: Equation 17–1 can be used as written unless the leakage rate observed during any of the mandatory leak checks (i.e., the post-test leak check or leak checks conducted prior to component changes) exceeds L_a. If L_p or L_i exceeds L_a, Equation 17–1 must be modified as follows:

(a) Case I. No component changes made during sampling run. In this case, replace V_m in Equation 17–1 with the expression:

$[V_m-(L_p-L_a)\theta]$

(b) Case II. One or more component changes made during the sampling run. In this case, replace V_m in Equation 17–1 by the expression:

$$\left[V_m - (L_1 - L_a)\theta_1 - \sum_{i=2}^{n} (L_i - L_a)\theta_i - (L_p - L_a)\theta_p\right]$$

and substitute only for those leakage rates (L_i or L_p) which exceed L_a.

6.4 Volume of Water Vapor.

$$V_{w(std)} = V_{lc}\left(\frac{\rho_w}{M_w}\right)\left(\frac{RT_{std}}{P_{std}}\right) = K_2 V_{lc}$$

Eq. 17–2

Where:

K_2=0.001333 m^3/ml for metric units; 0.04707 ft^3/ml for English units.

6.5 Moisture Content.

$$B_{ws} = \frac{V_{w(std)}}{V_{m(std)} + V_{w(std)}} \qquad \text{Eq. 17-3}$$

6.6 Acetone Blank Concentration.

$$C_a = \frac{M_a}{V_a \rho_a} \qquad \text{Eq. 17-4}$$

6.7 Acetone Wash Blank.

$W_a = C_a V_{aw} \rho_a$

Eq. 17–5

6.8 Total Particulate Weight. Determine the total particulate catch from the sum of the weights obtained from Containers 1 and 2 less the acetone blank (see Figure 17–4).

NOTE: Refer to Section 4.1.5 to assist in calculation of results involving two or more filter assemblies or two or more sampling trains.

6.9 Particulate Concentration.

$c_s = (0.001\ g/mg)\ (m_n/V_{m(std)})$

Eq. 17–6

6.10 Conversion Factors:

From	To	Multiply by
scf	m^3	0.02832
g/ft^3	gr/ft^3	15.43
g/ft^3	lb/ft^3	2.205×10^{-3}
g/ft^3	g/m^3	35.31

6.11 Isokinetic Variation.

6.11.1 Calculation from Raw Data.

$$I = \frac{100\, T_s \left[K_3 V_{lc} + (V_m Y / T_m)\left(P_{bar} + \Delta H/13.6\right)\right]}{60\, \theta v_s P_s A_n}$$

Eq. 17–7

Where:

K_3=0.003454 mm Hg–m^3/ml–°K for metric units; 0.002669 in. Hg-ft^3/ml–°R for English units.

6.11.2 Calculation from Intermediate Values.

$$I = \frac{T_s V_{m(std)} P_{std}\, 100}{T_{std} v_s \theta A_n P_s 60 (1-B_{ws})}$$

$$= K_4 \frac{T_s V_{m(std)}}{P_s v_s A_n \theta (1-B_{ws})}$$

Eq. 17–8

Where:

K_4=4.320 for metric units; 0.09450 for English units.

6.12 Acceptable Results. If 90 percent < I <110 percent, the results are acceptable. If the results are low in comparison to the standard and I is beyond the acceptable range, or, if I is less than 90 percent, the Administrator may opt to accept the results. Use Citation 4 in Bibliography to make judgments. Otherwise, reject the results and repeat the test.

7. *Bibliography*

1. Addendum to Specifications for Incinerator Testing at Federal Facilities. PHS, NCAPC. December 6, 1967.

2. Martin, Robert M., Construction Details of Isokinetic Source-Sampling Equipment. Environmental Protection Agency. Research Triangle Park, NC, APTD–0581. April, 1971.

3. Rom, Jerome J., Maintenance, Calibration, and Operation of Isokinetic Source-Sampling Equipment. Environmental Protection Agency. Research Triangle Park, NC APTD–0576. March, 1972.

4. Smith, W. S., R. T. Shigehara, and W. F. Todd. A Method of Interpreting Stack Sampling Data. Paper Presented at the 63rd Annual Meeting of the Air Pollution Control Association, St. Louis, MO June 14–19, 1970.

5. Smith, W. S., et al., Stack Gas Sampling Improved and Simplified with New Equipment. APCA Paper No. 67–119. 1967.

6. Specifications for Incinerator Testing at Federal Facilities. PHS, NCAPC. 1967.

7. Shigehara, R. T., Adjustments in the EPA Nomograph for Different Pitot Tube Coefficients and Dry Molecular Weights. Stack Sampling News 2:4–11. October, 1974.

8. Vollaro, R. F., A Survey of Commercially Available Instrumentation for the Measurement of Low-Range Gas Velocities. U.S. Environmental Protection Agency, Emission Measurement Branch. Research Triangle Park, NC, November, 1976 (unpublished paper).

9. Annual Book of ASTM Standards. Part 26. Gaseous Fuels; Coal and Coke; Atmospheric Analysis. American Society for Testing and Materials. Philadelphia, PA 1974. pp. 617–622.

10. Vollaro, R. F., Recommended Procedure for Sample Traverses in Ducts Smaller than 12 Inches in Diameter. U.S. Environmental Protection Agency, Emission Measurement Branch. Research Triangle Park, NC, November, 1976.

METHOD 18—MEASUREMENT OF GASEOUS ORGANIC COMPOUND EMISSIONS BY GAS CHROMATOGRAPHY

Introduction

This method should not be attempted by persons unfamiliar with the performance characteristics of gas chromatography, nor by those persons who are unfamiliar with

source sampling. Particular care should be exercised in the area of safety concerning choice of equipment and operation in potentially explosive atmospheres.

1. *Applicability and Principle*

1.1 Applicability. This method applies to the analysis of approximately 90 percent of the total gaseous organics emitted from an industrial source. It does not include techniques to identify and measure trace amounts of organic compounds, such as those found in building air and fugitive emission sources.

This method will not determine compounds that (1) are polymeric (high molecular weight), (2) can polymerize before analysis, or (3) have very low vapor pressures at stack or instrument conditions.

1.2 Principle.

The major organic components of a gas mixture are separated by gas chromatography (GC) and individually quantified by flame ionization, photoionization, electron capture, or other appropriate detection principles.

The retention times of each separated component are compared with those of known compounds under identical conditions. Therefore, the analyst confirms the identity and approximate concentrations of the organic emission components beforehand. With this information, the analyst then prepares or purchases commercially available standard mixtures to calibrate the GC under conditions identical to those of the samples. The analyst also determines the need for sample dilution to avoid detector saturation, gas stream filtration to eliminate particulate matter, and prevention of moisture condensation.

2. *Range and Sensitivity*

2.1 Range. The lower range of this method is determined by the sampling system; adsorbents may be used to concentrate the sample, thus lowering the limit of detection below the 1 part per million (ppm) typically achievable with direct interface or bag sampling. The upper limit is governed by GC detector saturation or column overloading; the upper range can be extended by dilution of sample with an inert gas or by using smaller volume gas sampling loops. The upper limit can also be governed by condensation of higher boiling compounds.

2.2 Sensitivity. The sensitivity limit for a compound is defined as the minimum detectable concentration of that compound, or the concentration that produces a signal-to-noise ratio of three to one. The minimum detectable concentration is determined during the presurvey calibration for each compound.

3. *Precision and Accuracy*

Gas chromatographic techniques typically provide a precision of 5 to 10 percent relative standard deviation (RSD), but an experienced GC operator with a reliable instrument can readily achieve 5 percent RSD. For this method, the following combined GC/operator values are required.

(a) Precision. Duplicate analyses are within 5 percent of their mean value.

(b) Accuracy. Analysis results of prepared audit samples are within 10 percent of preparation values.

(c) Recovery. After developing an appropriate sampling and analytical system for the pollutants of interest, conduct the procedure in Section 7.6. Conduct the appropriate recovery study in Section 7.6 at each sampling point where the method is being applied. Submit the data and results of the recovery procedure with the reporting of results under Section 7.5.

4. *Interferences*

Resolution interferences that may occur can be eliminated by appropriate GC column and detector choice or by shifting the retention times through changes in the column flow rate and the use of temperature programming.

The analytical system is demonstrated to be essentially free from contaminants by periodically analyzing blanks that consist of hydrocarbon-free air or nitrogen.

Sample cross-contamination that occurs when high-level and low-level samples or standards are analyzed alternately, is best dealt with by thorough purging of the GC sample loop between samples.

To assure consistent detector response, calibration gases are contained in dry air. To adjust gaseous organic concentrations when water vapor is present in the sample, water vapor concentrations are determined for those samples, and a correction factor is applied.

5. *Presurvey and Presurvey Sampling.*

Perform a presurvey for each source to be tested. Refer to Figure 18–1. Some of the information can be collected from literature surveys and source personnel. Collect gas samples that can be analyzed to confirm the identities and approximate concentrations of the organic emissions.

5.1 Apparatus. This apparatus list also applies to Sections 6 and 7.

5.1.1 Teflon Tubing. (Mention of trade names or specific products does not constitute endorsement by the U.S. Environmental Protection Agency.) Diameter and length determined by connection requirements of cylinder regulators and the GC. Additional tubing is necessary to connect the GC sample loop to the sample.

5.1.2 Gas Chromatograph. GC with suitable detector, columns, temperature-controlled sample loop and valve assembly, and temperature programable oven, if necessary. The GC shall achieve sensitivity requirements for the compounds under study.

5.1.3 Pump. Capable of pumping 100 ml/min. For flushing sample loop.

5.1.4 Flowmeters. To measure flow rates.

5.1.5 Regulators. Used on gas cylinders for GC and for cylinder standards.

5.1.6 Recorder. Recorder with linear strip chart is minimum acceptable. Integrator (optional) is recommended.

5.1.7 Syringes. 0.5-ml, 1.0- and 10-microliter sizes, calibrated, maximum accuracy (gas tight), for preparing calibration standards. Other appropriate sizes can be used.

5.1.8 Tubing Fittings. To plumb GC and gas cylinders.

5.1.9 Septums. For syringe injections.

5.1.10 Glass Jars. If necessary, clean-colored glass jars with Teflon-lined lids for condensate sample collection. Size depends on volume of condensate.

5.1.11 Soap Film Flow Meter. To determine flow rates.

5.1.12 Tedlar Bags. 10- and 50-liter capacity, for preparation of standards.

5.1.13 Dry Gas Meter with Temperature and Pressure Gauges. Accurate to ±2 percent, for perparation of gas standards.

5.1.14 Midget Impinger/Hot Plate Assembly. For preparation of gas standards.

5.1.15 Sample Flasks. For presurvey samples, must have gas-tight seals.

5.1.16 Adsorption Tubes. If necessary, blank tubes filled with necessary adsorbent (charcoal, Tenax, XAD–2, etc.) for presurvey samples.

5.1.17 Personnel Sampling Pump. Calibrated, for collecting adsorbent tube presurvey samples.

5.1.18 Dilution System. Calibrated, the dilution system is to be constructed following the specifications of an acceptable method.

5.1.19 Sample Probes. Pyrex or stainless steel, of sufficient length to reach centroid of stack, or a point no closer to the walls than 1 m.

5.1.20 Barometer. To measure barometric pressure.

5.2 Reagents.

5.2.1 Deionized Distilled Water.

5.2.2 Methylene Dichloride.

5.2.3 Calibration Gases. A series of standards prepared for every compound of interest.

5.2.4 Organic Compound Solutions. Pure (99.9 percent), or as pure as can reasonably be obtained, liquid samples of all the organic compounds needed to prepare calibration standards.

5.2.5 Extraction Solvents. For extraction of adsorbent tube samples in preparation for analysis.

5.2.6 Fuel. As recommended by the manufacturer for operation of the GC.

5.2.7 Carrier Gas. Hydrocarbon free, as recommended by the manufacturer for operation of the detector and compatability with the column.

5.2.8 Zero Gas. Hydrocarbon free air or nitrogen, to be used for dilutions, blank preparation, and standard preparation.

5.3 Sampling.

5.3.1 Collection of Samples with Glass Sampling Flasks. Presurvey samples can be collected in precleaned 250-ml double-ended glass sampling flasks. Teflon stopcocks, without grease, are preferred. Flasks should be cleaned as follows: Remove the stopcocks from both ends of the flasks, and wipe the parts to remove any grease. Clean the stopcocks, barrels, and receivers with methylene dichloride. Clean all glass ports with a soap solution, then rinse with tap and deionized distilled water. Place the flask in a cool glass annealing furnace and apply heat up to 500 °C. Maintain at this temperature for 1 hour. After this time period, shut off and open the furnace to allow the flask to cool. Grease the stopcocks with stopcock grease and return them to the flask receivers. Purge the assembly with high-purity nitrogen for 2 to 5 minutes. Close off the stopcocks after purging to maintain a slight positive nitrogen pressure. Secure the stopcocks with tape.

Presurvey samples can be obtained either by drawing the gases into the previously evacuated flask or by drawing the gases into and purging the flask with a rubber suction bulb.

5.3.1.1 Evacuated Flask Procedure. Use a high-vacuum pump to evacuate the flask to the capacity of the pump; then close off the stopcock leading to the pump. Attach a 6-mm outside diameter (OD) glass tee to the flask inlet with a short piece of Teflon tubing. Select a 6-mm OD borosilicate sampling probe, enlarged at one end to a 12-mm OD and of sufficient length to reach the centroid of the duct to be sampled. Insert a glass wool plug in the enlarged end of the probe to remove particulate matter. Attach the other end of the probe to the tee with a short piece of Teflon tubing. Connect a rubber suction bulb to the third leg of the tee. Place the filter end of the probe at the centroid of the duct, or at a point no closer to the walls than 1 m, and purge the probe with the rubber suction bulb. After the probe is completely purged and filled with duct gases, open the stopcock to the grab flask until the pressure in the flask reaches duct pressure. Close off the stopcock, and remove the probe from the duct. Remove the tee from the flask and tape the stopcocks to prevent leaks during shipment. Measure and record the duct temperature and pressure.

5.3.1.2 Purged Flask Procedure. Attach one end of the sampling flask to a rubber suction bulb. Attach the other end to a 6-mm OD glass probe as described in Section 5.3.1.1. Place the filter end of the probe at the centroid of the duct, or at a point no closer to the walls than 1 m, and apply suction with the bulb to completely purge the probe and

flask. After the flask has been purged, close off the stopcock near the suction bulb, and then close the stopcock near the probe. Remove the probe from the duct, and disconnect both the probe and suction bulb. Tape the stopcocks to prevent leakage during shipment. Measure and record the duct temperature and pressure.

5.3.2 Flexible Bag Procedure. Tedlar or aluminized Mylar bags can also be used to obtain the presurvey sample. Use new bags, and leak check them before field use. In addition, check the bag before use for contamination by filling it with nitrogen or air, and analyzing the gas by GC at high sensitivity. Experience indicates that it is desirable to allow the inert gas to remain in the bag about 24 hours or longer to check for desorption of organics from the bag. Follow the leak check and sample collection procedures given in Section 7.1.

5.3.3 Determination of Moisture Content. For combustion or water-controlled processes, obtain the moisture content from plant personnel or by measurement during the presurvey. If the source is below 59 °C, measure the wet bulb and dry bulb temperatures, and calculate the moisture content using a psychrometric chart. At higher temperatures, use Method 4 to determine the moisture content.

5.4 Determination of Static Pressure. Obtain the static pressure from the plant personnel or measurement. If a type S pitot tube and an inclined manometer are used, take care to align the pitot tube 90° from the direction of the flow. Disconnect one of the tubes to the manometer, and read the static pressure; note whether the reading is positive or negative.

5.5 Collection of Presurvey Samples with Adsorption Tube. Follow Section 7.4 for presurvey sampling.

6. *Analysis Development*

6.1 Selection of GC Parameters.

6.1.1 Column Choice. Based on the initial contact with plant personnel concerning the plant process and the anticipated emissions, choose a column that provides good resolution and rapid analysis time. The choice of an appropriate column can be aided by a literature search, contact with manufacturers of GC columns, and discussion with personnel at the emission source.

Most column manufacturers keep excellent records of their products. Their technical service departments may be able to recommend appropriate columns and detector type for separating the anticipated compounds, and they may be able to provide information on interferences, optimum operating conditions, and column limitations.

Plants with analytical laboratories may also be able to provide information on appropriate analytical procedures.

6.1.2 Preliminary GC Adjustment. Using the standards and column obtained in Section 6.1.1, perform initial tests to determine appropriate GC conditions that provide good resolution and minimum analysis time for the compounds of interest.

6.1.3 Preparation of Presurvey Samples. If the samples were collected on an adsorbent, extract the sample as recommended by the manufacturer for removal of the compounds with a solvent suitable to the type of GC analysis. Prepare other samples in an appropriate manner.

6.1.4 Presurvey Sample Analysis. Before analysis, heat the presurvey sample to the duct temperature to vaporize any condensed material. Analyze the samples by the GC procedure, and compare the retention times against those of the calibration samples that contain the components expected to be in the stream. If any compounds cannot be identified with certainty by this procedure, identify them by other means such as GC/mass spectroscopy (GC/MS) or GC/infrared techniques. A GC/MS system is recommended.

Use the GC conditions determined by the procedures of Section 6.1.2 for the first injection. Vary the GC parameters during subsequent injections to determine the optimum settings. Once the optimum settings have been determined, perform repeat injections of the sample to determine the retention time of each compound. To inject a sample, draw sample through the loop at a constant rate (100 ml/min for 30 seconds). Be careful not to pressurize the gas in the loop. Turn off the pump and allow the gas in the sample loop to come to ambient pressure. Activate the sample valve, and record injection time, loop temperature, column temperature, carrier flow rate, chart speed, and attenuator setting. Calculate the retention time of each peak using the distance from injection to the peak maximum divided by the chart speed. Retention times should be repeatable within 0.5 seconds.

If the concentrations are too high for appropriate detector response, a smaller sample loop or dilutions may be used for gas samples, and, for liquid samples, dilution with solvent is appropriate. Use the standard curves (Section 6.3) to obtain an estimate of the concentrations.

Identify all peaks by comparing the known retention times of compounds expected to be in the retention times of peaks in the sample. Identify any remaining unidentified peaks which have areas larger than 5 percent of the total using a GC/MS, or estimation of possible compounds by their retention times compared to known compounds, with confirmation by further GC analysis.

6.2 Calibration Standards. Prepare or obtain enough calibration standards so that there are three different concentrations of

each organic compound expected to be measured in the source sample. For each organic compound, select those concentrations that bracket the concentrations expected in the source samples. A calibration standard may contain more than one organic compound. If available, commercial cylinder gases may be used if their concentrations have been certified by direct analysis.

If samples are collected in adsorbent tubes (charcoal, XAD–2, Tenax, etc.), prepare or obtain standards in the same solvent used for the sample extraction procedure. Refer to Section 7.4.3.

Verify the stability of all standards for the time periods they are used. If gas standards are prepared in the laboratory, use one or more of the following procedures.

6.2.1 Preparation of Standards from High Concentration Cylinder Standards. Obtain enough high concentration cylinder standards to represent all the organic compounds expected in the source samples.

Use these high concentration standards to prepare lower concentration standards by dilution, as shown by Figures 18–5 and 18–6.

To prepare the diluted calibration samples, calibrated rotameters are normally used to meter both the high concentration calibration gas and the diluent gas. Other types of flowmeters and commercially available dilution systems can also be used.

Calibrate each flowmeter before use by placing it between the diluent gas supply and suitably sized bubble meter, spirometer, or wet test meter. Record all data shown on Figure 18–4. While it is desirable to calibrate the cylinder gas flowmeter with cylinder gas, the available quantity and cost may preclude it. The error introduced by using the diluent gas for calibration is insignificant for gas mixtures of up to 1,000 to 2,000 ppm of each organic component.

Once the flowmeters are calibrated, connect the flowmeters to the calibration and diluent gas supplies using 6-mm Teflon tubing. Connect the outlet side of the flowmeters through a connector to a leak-free Tedlar bag as shown in Figure 18–5. (See Section 7.1 for bag leak-check procedures.) Adjust the gas flow to provide the desired dilution, and fill the bag with sufficient gas for GC calibration. Be careful not to overfill and cause the bag to apply additional pressure on the dilution system. Record the flow rates of both flowmeters, and the laboratory temperature and atmospheric pressure. Calculate the concentration C_s in ppm of each organic in the diluted gas as follows:

$$C_s = \frac{10^6 (\bar{X} q_c)}{q_c + q_d}$$

Eq. 18-1

where:

10^6=Conversion to ppm.

X=Mole or volume fraction of the organic in the calibration gas to be diluted.

q_c=Flow rate of the calibration gas to be diluted.

q_d=Diluent gas flow rate.

Single-stage dilutions should be used to prepare calibration mixtures up to about 1:20 dilution factor.

For greater dilutions, a double dilution system is recommended, as shown in Figure 18–6. Fill the Tedlar bag with the dilute gas from the second stage. Record the laboratory temperature, barometric pressure, and static pressure readings. Correct the flow reading for temperature and pressure. Calculate the concentration C_s in ppm of the organic in the final gas mixture as follows:

$$C_s = 10^6 \bar{X} \left(\frac{q_{c1}}{q_{c1} + q_{d1}}\right)\left(\frac{q_{c2}}{q_{c2} + q_{d2}}\right)$$

Eq. 18-2

Where:

10^6=Conversion to ppm.

X=Mole or volume fraction of the organic in the calibration gas to be diluted.

q_{c1}=Flow rate of the calibration gas to be diluted in stage 1.

q_{c2}=Flow rate of the calibration gas to be diluted in stage 2.

q_{d1}=Flow rate of diluent gas in stage 1.

q_{d2}=Flow rate of diluent gas in stage 2.

Further details of the calibration methods for flowmeters and the dilution system can be found in Citation 21 in the Bibliography.

6.2.2 Preparation of Standards from Volatile Materials. Record all data shown on Figure 18–3.

6.2.2.1 Gas Injection Technique. This procedure is applicable to organic compounds that exist entirely as a gas at ambient conditions. Evacuate a 10-liter Tedlar bag that has

passed a leak-check (see Section 7.1), and meter in 5.0 liters of air or nitrogen through a dry gas meter that has been calibrated in a manner consistent with the procedure described in Section 5.1.1 of Method 5. While the bag is filling use a 0.5-ml syringe to inject a known quantity of ''pure'' gas of the organic compound through the wall of the bag, or through a septum-capped tee at the bag inlet. Withdraw the syringe needle, and immediately cover the resulting hole with a piece of masking tape. In a like manner, prepare dilutions having other concentrations. Prepare a minimum of three concentrations. Place each bag on a smooth surface, and alternately depress opposite sides of the bag 50 times to mix the gases. Record the average meter temperature and pressure, the gas volume and the barometric pressure. Record the syringe temperature and pressure before injection.

Calculate each organic standard concentration C_s in ppm as follows:

$$C_s = \frac{G_v \times 10^6 \frac{293}{T_s} \frac{P_s}{760}}{V_m Y \frac{293}{T_m} \frac{P_m}{760} 1000} = \frac{G_v \times 10^3 \frac{P_s}{T_s} \frac{T_m}{P_m}}{V_m Y} \qquad \text{Eq. 18-3}$$

where:

G_v=Gas volume or organic compound injected, ml.

10^6=Conversion to ppm.

P_s=Absolute pressure of syringe before injection, mm Hg.

T_s=Absolute temperature of syringe before injection, °K.

V_m=Gas volume indicated by dry gas meter, liters.

Y=Dry gas meter calibration factor, dimensionless.

P_m=Absolute pressure of dry gas meter, mm Hg.

T_m=Absolute temperature of dry gas meter, °K.

1000=Conversion factor, ml/liter.

6.2.2.2 Liquid Injection Technique. Use the equipment shown in Figure 18–8. Calibrate the dry gas meter as described in Section 6.2.2.1 with a wet test meter or a spirometer. Use a water manometer for the pressure gauge and glass, Teflon, brass, or stainless steel for all connections. Connect a valve to the inlet of the 50-liter Tedlar bag.

To prepare the standards, assemble the equipment as shown in Figure 18–8, and leak-check the system. Completely evacuate the bag. Fill the bag with hydrocarbon-free air, and evacuate the bag again. Close the inlet valve.

Turn on the hot plate, and allow the water to reach boiling, Connect the bag to the impinger outlet. Record the initial meter reading, open the bag inlet valve, and open the cylinder. Adjust the rate so that the bag will be completely filled in approximately 15 minutes. Record meter pressure and temperature, and local barometric pressure.

Allow the liquid organic to equilibrate to room temperature. Fill the 1.0- or 10-microliter syringe to the desired liquid volume with the organic. Place the syringe needle into the impinger inlet using the septum provided, and inject the liquid into the flowing air stream. Use a needle of sufficient length to permit injection of the liquid below the air inlet branch of the tee. Remove the syringe.

When the bag is filled, stop the pump, and close the bag inlet valve. Record the final meter reading, temperature, and pressure.

Disconnect the bag from the impinger outlet, and either set it aside for at least 1 hour, or massage the bag to insure complete mixing.

Measure the solvent liquid density at room temperature by accurately weighing a known volume of the material on an analytical balance to the nearest 1.0 milligram. A ground-glass stoppered 25-mil volumetric flask or a glass-stoppered specific gravity bottle is suitable for weighing. Calculate the result in terms of g/ml. As an alternative, literature values of the density of the liquid at 20 °C may be used.

Calculate each organic standard concentration C_s in ppm as follows:

$$C_s = \frac{\frac{L_v \rho}{M}(24.055 \times 10^6)}{V_m Y \frac{293}{T_m} \frac{P_m}{760} 1000} = 6.24 \times 10^4 \frac{L_v \rho T_m}{M V_m Y P_m} \quad \text{Eq. 18-4}$$

where:

L_v=Liquid volume of organic injected, µl.

µl=Liquid organic density as determined, g/ml.

M=Molecular weight of organic, g/g-mole.

24.055=Ideal gas molar volume at 293 °K and 760 mm Hg, liters/g-mole.

10^6=Conversion to ppm.

1000=Conversion factor, µl/ml.

6.3 Preparation of Calibration Curves. Establish proper GC conditions, then flush the sampling loop for 30 seconds at a rate of 100 ml/min. Allow the sample loop pressure to equilibrate to atmospheric pressure, and activate the injection valve. Record the standard concentration, attenuator factor, injection time, chart speed, retention time, peak area, sample loop temperature, column temperature, and carrier gas flow rate. Repeat the standard injection until two consecutive injections give area counts within 5 percent of their average. The average value multipled by the attenuator factor is then the calibration area value for the concentration.

Repeat this procedure for each standard. Prepare a graphical plot of concentration (C_s) versus the calibration area values. Perform a regression analysis, and draw the least squares line.

6.4 Relative Response Factors. The calibration curve generated from the standards for a single organic can usually be related to each of the individual GC response curves that are developed in the laboratory for all the compounds in the source. In the field, standards for that single organic can then be used to ''calibrate'' the GC for all the organics present. This procedure should first be confirmed in the laboratory by preparing and analyzing calibration standards containing multiple organic compounds.

6.5 Quality Assurance for Laboratory Procedures. Immediately after the preparation of the calibration curves and prior to the presurvey sample analysis, the analysis audit described in 40 CFR Part 61, Appendix C, Procedure 2: ''Procedure for Field Auditing GC Analysis,'' should be performed. The information required to document the analysis of the audit samples has been included on the example data sheets shown in Figures 18–3 and 18–7. The audit analyses should agree with the audit concentrations within 10 percent. When available, the tester may obtain audit cylinders by contacting: U.S. Environmental Protection Agency, Environmental Monitoring Systems Laboratory, Quality Assurance Division (MD–77), Research Triangle Park, North Carolina 27711. Audit cylinders obtained from a commercial gas manufacturer may be used provided that (a) the gas manufacturer certifies the audit cylinder in a manner similar to the procedure described in 40 CFR Part 61, Appendix B, Method 106, Section 5.2.3.1, and (b) the gas manufacturer obtains an independent analysis of the audit cylinders to verify this analysis. Independent analysis is defined as an analysis performed by an individual other than the individual who performs the gas manufacturer's analysis, while using calibration standards and analysis equipment different from those used for the gas manufacturer's analysis. Verification is complete and acceptable when the independent analysis concentration is within 5 percent of the gas manufacturer's concentration.

7. *Final Sampling and Analysis Procedure*

Considering safety (flame hazards) and the source conditions, select an appropriate sampling and analysis procedure (Sections 7.1, 7.2, 7.3, or 7.4). In situations where a hydrogen flame is a hazard and no intrinsically safe GC is suitable, use the flexible bag collection technique or an adsorption technique. If the source temperature is below 100 °C, and the organic concentrations are suitable for the detector to be used, use the direct interface method. If the source gases require dilution, use a dilution interface and either the bag sample or adsorption tubes. The choice between these two techniques will depend on the physical layout of the site, the source temperature, and the storage stability of the compounds if collected in the bag. Sample polar compounds by direct interfacing or dilution interfacing to prevent sample loss by adsorption on the bag.

7.1 Integrated Bag Sampling and Analysis.

7.1.1 Evacuated Container Sampling Procedure. In this procedure, the bags are filled by evacuating the rigid air-tight containers that hold the bags. Use a field sample data sheet as shown in Figure 18–10. Collect triplicate sample from each sample location.

7.1.1.1 Apparatus.

7.1.1.1.1 Probe. Stainless steel, Pyrex glass, or Teflon tubing probe, according to the duct temperature, with 6.4-mm OD Teflon tubing of sufficient length to connect to

the sample bag. Use stainless steel or Teflon unions to connect probe and sample line.

7.1.1.1.2 Quick Connects. Male (2) and female (2) of stainless steel construction.

7.1.1.1.3 Needle Valve. To control gas flow.

7.1.1.1.4 Pump. Leakless Teflon-coated diaphragm-type pump or equivalent. To deliver at least 1 liter/min.

7.1.1.1.5 Charcoal Adsorption Tube. Tube filled with activated charcoal, with glass wool plugs at each end, to adsorb organic vapors.

7.1.1.1.6 Flowmeter. 0 to 500-ml flow range; with manufacturer's calibration curve.

7.1.1.2 Sampling Procedure. To obtain a sample, assemble the sample train as shown in Figure 18–9. Leak check both the bag and the container. Connect the vacuum line from the needle valve to the Teflon sample line from the probe. Place the end of the probe at the centroid of the stack, or at a point no closer to the walls than 1 m, and start the pump with the needle valve adjusted to yield a flow of 0.5 liter/minute. After allowing sufficient time to purge the line several times, connect the vacuum line to the bag, and evacuate until the rotameter indicates no flow. Then position the sample and vacuum lines for sampling, and begin the actual sampling, keeping the rate proportional to the stack velocity. As a precaution, direct the gas exiting the rotameter away from sampling personnel. At the end of the sample period, shut off the pump, disconnect the sample line from the bag, and disconnect the vacuum line from the bag container, Record the source temperature, barometric pressure, ambient temperature, sampling flow rate, and initial and final sampling time on the data sheet shown in Figure 18–10. Protect the Tedlar bag and its container from sunlight. When possible, perform the analysis within 2 hours of sample collection.

7.1.2 Direct Pump Sampling Procedure. Follow 7.1.1, except place the pump and needle valve between the probe and the bag. Use a pump and needle valve constructed of stainless steel or some other material not affected by the stack gas. Leak check the system, and then purge with stack gas before the connecting to the previously evacuated bag.

7.1.3 Explosion Risk Area Bag Sampling Procedure. Follow 7.1.1 except replace the pump with another evacuated can (see Figure 18–9a). Use this method whenever there is a possibility of an explosion due to pumps, heated probes, or other flame producing equipment.

7.1.4 Other Modified Bag Sampling Procedures. In the event that condensation is observed in the bag while collecting the sample and a direct interface system cannot be used, heat the bag during collection, and maintain it at a suitably elevated temperature during all subsequent operations. (Note: Take care to leak check the system prior to the dilutions so as not to create a potentially explosive atmosphere.) As an alternative, collect the sample gas, and simultaneously dilute it in the Tedlar bag.

In the first procedure, heat the box containing the sample bag to the source temperature, provided the components of the bag and the surrounding box can withstand this temperature. Then transport the bag as rapidly as possible to the analytical area while maintaining the heating, or cover the box with an insulating blanket. In the analytical area, keep the box heated to source temperature until analysis. Be sure that the method of heating the box and the control for the heating circuit are compatible with the safety restrictions required in each area.

To use the second procedure, prefill the Tedlar bag with a known quantity of inert gas. Meter the inert gas into the bag according to the procedure for the preparation of gas concentration standards of volatile liquid materials (Section 6.2.2.2), but eliminate the midget impinger section. Take the partly filled bag to the source, and meter the source gas into the bag through heated sampling lines and a heated flowmeter, or Teflon positive displacement pump. Verify the dilution factors periodically through dilution and analysis of gases of known concentration.

7.1.5 Analysis of Bag Samples.

7.1.5.1 Apparatus. Same as Section 5. A minimum of three gas standards are required.

7.1.5.2 Procedure. Establish proper GC operating conditions as described in Section 6.3, and record all data listed in Figure 18–7. Prepare the GC so that gas can be drawn through the sample valve. Flush the sample loop with gas from one of the three calibration mixtures, and activate the valve. Obtain at least two chromatograms for the mixture. The results are acceptable when the peak areas from two consecutive injections agree to within 5 percent of their average. If they do not, run additional analyses or correct the analytical techniques until this requirement is met. Then analyze the other two calibration mixtures in the same manner. Prepare a calibration curve as described in the same manner. Prepare a calibration curve as described in Section 6.3.

Analyze the source gas samples by connecting each bag to the sampling valve with a piece of Teflon tubing identified for that bag. Follow the specifications on replicate analyses specified for the calibration gases. Record the data listed in Figure 18–11. If certain items do not apply, use the notation ''N.A.'' After all samples have been analyzed, repeat the analyses of the calibration gas mixtures, and generate a second calibration curve. Use an average of the two curves to determine the sample gas concentrations. If the two calibration curves differ by more than 5 percent from their mean value, then

report the final results by comparison to both calibration curves.

7.1.6 Determination of Bag Water Vapor Content. Measure and record the ambient temperature and barometric pressure near the bag. From a water saturation vapor pressure table, determine and record the water vapor content as a decimal figure. (Assume the relative humidity to be 100 percent unless a lesser value is known.) If the bag has been maintained at an elevated temperature as described in Section 7.1.4, determine the stack gas water content by Method 4.

7.1.7 Quality Assurance. Immediately prior to the analysis of the stack gas samples, perform audit analyses as described in Section 6.5. The audit analyses must agree with the audit concentrations within 10 percent. If the results are acceptable, proceed with the analyses of the source samples. If they do not agree within 10 percent, then determine the reason for the discrepancy, and take corrective action before proceeding.

7.1.8 Emission Calculations. From the average calibration curve described in Section 7.1.5., select the value of C_s that corresponds to the peak area. Calculate the concentration C_c in ppm, dry basis, of each organic in the sample as follows:

$$C_c = \frac{C_s P_r T_i F_r}{P_i T_r (1-B_{ws})} \quad \text{Eq. 18-5}$$

where:

C_s=Concentration of the organic from the calibration curve, ppm.

P_r=Reference pressure, the barometric pressure or absolute sample loop pressure recorded during calibration, mm Hg.

T_i=Sample loop temperature at the time of sample analysis, °K.

F_r=Relative response factor (if applicable, see Section 6.4).

P_i=Barometric or absolute sample loop pressure at time of sample analysis, mm Hg.

T_r=Reference temperature, the termperature of the sample loop recorded during calibration, °K.

B_{ws}=Water vapor content of the bag sample or stack gas, proportion by volume.

7.2 Direct Interface Sampling and Analysis Procedure. The direct interface procedure can be used provided that the moisture content of the gas does not interfere with the analysis procedure, the physical requirements of the equipment can be met at the site, and the source gas concentration is low enough that detector saturation is not a problem. Adhere to all safety requirements with this method.

7.2.1 Apparatus.

7.2.1.1 Probe. Constructed of stainless steel, Pyrex glass, or Teflon tubing as required by duct temperature, 6.4-mm OD, enlarged at duct end to contain glass wool plug. If necessary, heat the probe with heating tape or a special heating unit capable of maintaining duct temperature.

7.2.1.2 Sample Lines. 6.4-mm OD Teflon lines, heat-traced to prevent condensation of material.

7.2.1.3 Quick Connects. To connect sample line to gas sampling valve on GC instrument and to pump unit used to withdraw source gas. Use a quick connect or equivalent on the cylinder or bag containing calibration gas to allow connection of the calibration gas to the gas sampling valve.

7.2.1.4 Thermocouple Readout Device. Potentiometer or digital thermometer, to measure source temperature and probe temperature.

7.2.1.5 Heated Gas Sampling Valve. Of two-position, six-port design, to allow sample loop to be purged with source gas or to direct source gas into the GC instrument.

7.2.1.6 Needle Valve. To control gas sampling rate from the source.

7.2.1.7 Pump. Leakless Teflon-coated diaphragm-type pump or equivalent, capable of at least 1 liter/minute sampling rate.

7.2.1.8 Flowmeter. Of suitable range to measure sampling rate.

7.2.1.9 Charcoal Adsorber. To adsorb organic vapor collected from the source to prevent exposure of personnel to source gas.

7.2.1.10 Gas Cylinders. Carrier gas (helium or nitrogen), and oxygen and hydrogen for a flame ionization detector (FID) if one is used.

7.2.1.11 Gas Chromatograph. Capable of being moved into the field, with detector, heated gas sampling valve, column required to complete separation of desired components, and option for temperature programming.

7.2.1.12 Recorder/Integrator. To record results.

7.2.2 Procedure. To obtain a sample, assemble the sampling system as shown in Figure 18–12. Make sure all connections are tight. Turn on the probe and sample line heaters. As the temperature of the probe and heated line approaches the source temperature as indicated on the thermocouple readout device, control the heating to maintain a temperature of 0 to 3 °C above the source temperature. While the probe and heated line are being heated, disconnect the sample line from the gas sampling valve, and attach the line from the calibration gas mixture. Flush the sample loop with calibration gas and analyze a portion of that gas. Record the results. After the calibration gas sample has been flushed into the GC instrument, turn the gas sampling valve to flush position, then reconnect the probe sample line to the valve. Place the inlet of the probe at the centroid of the duct, or at a point no closer to the walls than 1 m, and draw source gas into the probe, heated line, and sample loop. After thorough flushing, analyze the sample

using the same conditions as for the calibration gas mixture. Repeat the analysis on an additional sample. Measure the peak areas for the two samples, and if they do not agree to within 5 percent of their mean value, analyze additional samples until two consecutive analyses meet this criteria. Record the data. After consistent results are obtained, remove the probe from the source and analyze a second calibration gas mixture. Record this calibration data and the other required data on the data sheet shown in Figure 18–11, deleting the dilution gas information.

(NOTE: Take care to draw all samples, calibration mixtures, and audits through the sample loop at the same pressure.)

7.2.3 Determination of Stack Gas Moisture Content. Use Method 4 to measure the stack gas moisture content.

7.2.4 Quality Assurance. Same as Section 7.1.7. Introduce the audit gases in the sample line immediately following the probe.

7.2.5 Emission Calculations. Same as Section 7.1.8.

7.3 Dilution Interface Sampling and Analysis Procedure. Source samples that contain a high concentration of organic materials may require dilution prior to analysis to prevent saturating the GC detector. The apparatus required for this direct interface procedure is basically the same as that described in the Section 7.2, except a dilution system is added between the heated sample line and the gas sampling valve. The apparatus is arranged so that either a 10:1 or 100:1 dilution of the source gas can be directed to the chromatograph. A pump of larger capacity is also required, and this pump must be heated and placed in the system between the sample line and the dilution apparatus.

7.3.1 Apparatus. The equipment required in addition to that specified for the direct interface system is as follows:

7.3.1.1 Sample Pump. Leakless Teflon-coated diaphragm-type that can withstand being heated to 120 °C and deliver 1.5 liters/minute.

7.3.1.2 Dilution Pumps. Two Model A–150 Komhyr Teflon positive displacement type delivering 150 cc/minute, or equivalent. As an option, calibrated flowmeters can be used in conjunction with Teflon-coated diaphragm pumps.

7.3.1.3 Valves. Two Teflon three-way valves, suitable for connecting to 6.4-mm OD Teflon tubing.

7.3.1.4 Flowmeters. Two, for measurement of diluent gas, expected delivery flow rate to be 1,350 cc/min.

7.3.1.5 Diluent Gas with Cylinders and Regulators. Gas can be nitrogen or clean dry air, depending on the nature of the source gases.

7.3.1.6 Heated Box. Suitable for being heated to 120 °C, to contain the three pumps, three-way valves, and associated connections. The box should be equipped with quick connect fittings to facilitate connection of: (1) The heated sample line from the probe, (2) the gas sampling valve, (3) the calibration gas mixtures, and (4) diluent gas lines. A schematic diagram of the components and connections is shown in Figure 18–13.

(NOTE: Care must be taken to leak check the system prior to the dilutions so as not to create a potentially explosive atmosphere.)

The heated box shown in Figure 18–13 is designed to receive a heated line from the probe. An optional design is to build a probe unit that attaches directly to the heated box. In this way, the heated box contains the controls for the probe heaters, or, if the box is placed against the duct being sampled, it may be possible to eliminate the probe heaters. In either case, a heated Teflon line is used to connect the heated box to the gas sampling valve on the chromatograph.

7.3.2 Procedure. Assemble the apparatus by connecting the heated box, shown in Figure 18–13, between the heated sample line from the probe and the gas sampling valve on the chromatograph. Vent the source gas from the gas sampling valve directly to the charcoal filter, eliminating the pump and rotameter. Heat the sample probe, sample line, and heated box. Insert the probe and source thermocouple to the centroid of the duct, or to a point no closer to the walls than 1 m. Measure the source temperature, and adjust all heating units to a temperature 0 to 3 °C above this temperature. If this temperature is above the safe operating temperature of the Teflon components, adjust the heating to maintain a temperature high enough to prevent condensation of water and organic compounds. Verify the operation of the dilution system by analyzing a high concentration gas of known composition through either the 10:1 or 100:1 dilution stages, as appropriate. (If necessary, vary the flow of the diluent gas to obtain other dilution ratios.) Determine the concentration of the diluted calibration gas using the dilution factor and the calibration curves prepared in the laboratory. Record the pertinent data on the data sheet shown in Figure 18–11. If the data on the diluted calibration gas are not within 10 percent of the expected values, determine whether the chromatograph or the dilution system is in error, and correct it. Verify the GC operation using a low concentration standard by diverting the gas into the sample loop, bypassing the dilution system. If these analyses are not within acceptable limits, correct the dilution system to provide the desired dilution factors. Make this correction by diluting a high-concentration standard gas mixture to adjust the dilution ratio as required.

Once the dilution system and GC operations are satisfactory, proceed with the analysis of source gas, maintaining the same dilution settings as used for the standards.

Repeat the analyses until two consecutive values do not vary by more than 5 percent from their mean value are obtained.

Repeat the analysis of the calibration gas mixtures to verify equipment operation. Analyze the two field audit samples using either the dilution system, or directly connect to the gas sampling valve as required. Record all data and report the results to the audit supervisor.

7.3.3 Determination of Stack Gas Moisture Content. Same as Section 7.2.3.

7.3.4 Quality Assurance. Same as Section 7.2.4.

7.3.5 Emission Calculations. Same as Section 7.2.5, with the dilution factor applied.

7.4 Adsorption Tube Procedure (Alternative Procedure). It is suggested that the tester refer to the National Institute of Occupational Safety and Health (NIOSH) method for the particular organics to be sampled. The principal interferent will be water vapor. If water vapor is present at concentrations above 3 percent, silica gel should be used in front of the charcoal. Where more than one compound is present in the emissions, then develop relative adsorptive capacity information.

7.4.1 Additional Apparatus. In addition to the equipment listed in the NIOSH method for the particular organic(s) to be sampled, the following items (or equivalent) are suggested.

7.4.1.1 Probe (Optional). Borosilicate glass or stainless steel, approximately 6-mm ID, with a heating system if water condensation is a problem, and a filter (either in-stack or out-stack heated to stack temperature) to remove particulate matter. In most instances, a plug of glass wool is a satisfactory filter.

7.4.1.2 Flexible Tubing. To connect probe to adsorption tubes. Use a material that exhibits minimal sample adsorption.

7.4.1.3 Leakless Sample Pump. Flow controlled, constant rate pump, with a set of limiting (sonic) orifices to provide pumping rates from approximately 10 to 100 cc/min.

7.4.1.4 Bubble-Tube Flowmeter. Volume accuracy within ± 1 percent, to calibrate pump.

7.4.1.5 Stopwatch. To time sampling and pump rate calibration.

7.4.1.6 Adsorption Tubes. Similar to ones specified by NIOSH, except the amounts of adsorbent per primary/backup sections are 800/200 mg for charcoal tubes and 1040/260 mg for silica gel tubes. As an alternative, the tubes may contain a porous polymer adsorbent such as Tenax GC or XAD–2.

7.4.1.7 Barometer. Accurate to 5 mm Hg, to measure atmospheric pressure during sampling and pump calibration.

7.4.1.8 Rotameter. 0 to 100 cc/min, to detect changes in flow rate during sampling.

7.4.2 Sampling and Analysis. It is suggested that the tester follow the sampling and analysis portion of the respective NIOSH method section entitled ''Procedure.'' Calibrate the pump and limiting orifice flow rate through adsorption tubes with the bubble tube flowmeter before sampling. The sample system can be operated as a ''recirculating loop'' for this operation. Record the ambient temperature and barometric pressure. Then, during sampling, use the rotameter to verify that the pump and orifice sampling rate remains constant.

Use a sample probe, if required, to obtain the sample at the centroid of the duct, or at a point no closer to the walls than 1 m. Minimize the length of flexible tubing between the probe and adsorption tubes. Several adsorption tubes can be connected in series, if the extra adsorptive capacity is needed. Provide the gas sample to the sample system at a pressure sufficient for the limiting orifice to function as a sonic orifice. Record the total time and sample flow rate (or the number of pump strokes), the barometric pressure, and ambient temperature. Obtain a total sample volume commensurate with the expected concentration(s) of the volatile organic(s) present, and recommended sample loading factors (weight sample per weight adsorption media). Laboratory tests prior to actual sampling may be necessary to predetermine this volume. When more than one organic is present in the emissions, then develop relative adsorptive capacity information. If water vapor is present in the sample at concentrations above 2 to 3 percent, the adsorptive capacity may be severely reduced. Operate the gas chromatograph according to the manufacture's instructions. After establishing optimum conditions, verify and document these conditions during all operations. Analyze the audit samples (see Section 7.4.4.3), then the emission samples. Repeat the analysis of each sample until the relative deviation of two consecutive injections does not exceed 5 percent.

7.4.3 Standards and Calibration. The standards can be prepared according to the respective NIOSH method. Use a minimum of three different standards; select the concentrations to bracket the expected average sample concentration. Perform the calibration before and after each day's sample analyses. Prepare the calibration curve by using the least squares method.

7.4.4 Quality Assurance.

7.4.4.1 Determine the recovery efficiency of the pollutants of interest according to Section 7.6.

7.4.4.2 Determination of Sample Collection Efficiency. For the source samples, analyze the primary and backup portions of the adsorption tubes separately. If the backup portion exceeds 10 percent of the total amount (primary and backup), repeat the sampling with a larger sampling portion.

7.4.4.3 Analysis Audit. Immediately before the sample analyses, analyze the two audits

in accordance with Section 7.4.2. The analysis audit shall agree with the audit concentration within 10 percent.

7.4.4.4 Pump Leak Checks and Volume Flow Rate Checks. Perform both of these checks immediately after sampling with all sampling train components in place. Perform all leak checks according to the manufacturer's instructions, and record the results. Use the bubble-tube flowmeter to measure the pump volume flow rate with the orifice used in the test sampling, and the result. If it has changed by more than 5 but less than 20 percent, calculate an average flow rate for the test. If the flow rate has changed by more than 20 percent, recalibrate the pump and repeat the sampling.

7.4.4.5 Calculations. All calculations can be performed according to the respective NIOSH method. Correct all sample volumes to standard conditions. If a sample dilution system has been used, multiply the results by the appropriate dilution ratio. Correct all results according to the applicable procedure in Section 7.6. Report results as ppm by volume, dry basis.

7.5 Reporting of Results. At the completion of the field analysis portion of the study, ensure that the data sheets shown in Figure 18–11 have been completed. Summarize this data on the data sheets shown in Figure 18–15.

7.6 Recovery Study. After conducting the presurvey and identifying all of the pollutants of interest, conduct the appropriate recovery study during the test based on the sampling system chosen for the compounds of interest.

7.6.1 Recovery Study for Direct Interface or Dilution Interface Sampling. If the procedures in Section 7.2 or 7.3 are to be used to analyze the stack gas, conduct the calibration procedure as stated in Section 7.2.2 or 7.3.2, as appropriate. Upon successful completion of the appropriate calibration procedure, attach the mid-level calibration gas for at least one target compound to the inlet of the probe or as close as possible to the inlet of the probe, but before the filter. Repeat the calibration procedure by sampling and analyzing the mid-level calibration gas through the entire sampling and analytical system until two consecutive samples are within 5 percent of their mean value. The mean of the calibration gas response directly to the analyzer and the mean of the calibration gas response sampled through the probe shall be within 10 percent of each other. If the difference in the two means is greater than 10 percent, check for leaks throughout the sampling system and repeat the analysis of the standard through the sampling system until this criterion is met.

7.6.2 Recovery Study for Bag Sampling. Follow the procedures for bag sampling and analysis in Section 7.1. After analyzing all three bag samples, choose one of the bag samples and analyze twice more (this bag will become the spiked bag). Spike the chosen bag sample with a known mixture (gaseous or liquid) of all of the target pollutants. Follow a procedure similar to the calibration standard preparation procedure listed in Section 6.2, as appropriate. The theoretical concentration, in ppm, of each spiked compound in the bag shall be 40 to 60 percent of the average concentration measured in the three bag samples. If a target compound was not detected in the bag samples, the concentration of that compound to be spiked shall be 5 times the limit of detection for that compound. Analyze the bag three times after spiking. Calculate the average fraction recovered (R) of each spiked target compound with the following equation:

$$R = \frac{t - u}{s}$$

where

t = measured average concentration (ppm) of target compound and source sample (analysis results subsequent to bag spiking)

u = source sample average concentration (ppm) of target compound in the bag (analysis results before bag spiking)

s = theoretical concentration (ppm) of spiked target compound in the bag

For the bag sampling technique to be considered valid for a compound, $0.70 \leq R \leq 1.30$. If the R value does not meet this criterion for a target compound, the sampling technique is not acceptable for that compound, and therefore another sampling technique shall be evaluated for acceptance (by repeating the recovery study with another sampling technique). Report the R value in the test report and correct all field measurements with the calculated R value for that compound by using the following equation:

$$\text{Reported Result} = \frac{\text{Measured Concentration (ppm)}}{R}$$

7.6.3 Recovery Study for Adsorption Tube Sampling. If following the adsorption tube procedure in Section 7.4, conduct a recovery study of the compounds of interest during

the actual field test. Set up two identical sampling trains. Collocate the two sampling probes in the stack. The probes shall be placed in the same horizontal plane, where the first probe tip is 2.5 cm from the outside edge of the other and with a pitot tube on the outside of each probe. One of the sampling trains shall be designated the spiked train and the other the unspiked train. Spike all of the compounds of interest (in gaseous or liquid form) onto the adsorbent tube(s) in the spiked train before sampling. The mass of each spiked compound shall be 40 to 60 percent of the mass expected to be collected with the unspiked train. Sample the stack gas into the two trains simultaneously. Analyze the adsorbents from the two trains utilizing the same analytical procedure and instrumentation. Determine the fraction of spiked compound recovered (R) using the following equations.

$$m_v = \frac{m_s}{v_s} - \frac{m_u}{v_u}$$

where

m_v = mass per volume of spiked compound measured (μg/L).

m_s = total mass of compound measured on adsorbent with spiked train (μg).

v_s = volume of stack gas sampled with spiked train (L).

m_u = total mass of compound measured on adsorbent with unspiked train (μg).

v_u = volume of stack gas sampled with unspiked train (L).

$$R = \frac{m_v \times v_s}{S}$$

where S = theoretical mass of compound spiked onto adsorbent in spiked train (μg).

7.6.3.1 Repeat the procedure in Section 7.6.3 twice more, for a total of three runs. In order for the adsorbent tube sampling and analytical procedure to be acceptable for a compound, $0.70 \leq R \leq 1.30$ (R in this case is the average of three runs). If the average R value does not meet this criterion for a target compound, the sampling technique is not acceptable for that compound, and therefore another sampling technique shall be evaluated for acceptance (by repeating the recovery study with another sampling technique). Report the R value in the test report and correct all field measurements with the calculated R value for that compound by using the following equation:

$$\text{Reported Result} = \frac{\text{Measured Concentration (ppm)}}{R}$$

8. *Bibliography*

1. American Society for Testing and Materials. C_1 Through C_5 Hydrocarbons in the Atmosphere by Gas Chromatography. ASTM D 2820–72, Part 23. Philadelphia, Pa. 23:950–958. 1973.

2. Corazon, V. V. Methodology for Collecting and Analyzing Organic Air Pollutants. U.S. Environmental Protection Agency. Publication No. EPA–600/2–79–042. February 1979.

3. Dravnieks, A., B. K. Krotoszynski, J. Whitfield, A. O'Donnell, and T. Burgwald. Environmental Science and Technology. *5*(12):1200–1222. 1971.

4. Eggertsen, F. T., and F. M. Nelsen. Gas Chromatographic Analysis of Engine Exhaust and Atmosphere. Analytical Chemistry. *30*(6): 1040–1043. 1958.

5. Feairheller, W. R., P. J. Marn, D. H. Harris, and D. L. Harris. Technical Manual for Process Sampling Strategies for Organic Materials. U.S. Environmental Protection Agency. Research Triangle Park, NC. Publication No. EPA 600/2–76–122. April 1976. 172 p.

6. FR, 39 FR 9319–9323. 1974.

7. FR, 39 FR 32857–32860. 1974.

8. FR, 41 FR 23069–23072 and 23076–23090. 1976.

9. FR, 41 FR 46569–46571. 1976.

10. FR, 42 FR 41771–41776. 1977.

11. Fishbein, L. Chromatography of Environmental Hazards, Volume II. Elsevier Scientific Publishing Company. NY, NY. 1973.

12. Hamersma, J. W., S. L. Reynolds, and R. F. Maddalone. EPA/IERL–RTP Procedures Manual: Level 1 Environmental Assessment. U.S. Environmental Protection Agency. Research Triangle Park, NC. Publication No. EPA 600/276–160a. June 1976. 130 p.

13. Harris, J. C., M. J. Hayes, P. L. Levins, and D. B. Lindsay. EPA/IERL–RTP Procedures for Level 2 Sampling and Analysis of Organic Materials. U.S. Environmental Protection Agency. Research Triangle Park, NC. Publication No. EPA 600/7–79–033. February 1979. 154 p.

14. Harris, W. E., H. W. Habgood. Programmed Temperature Gas Chromatography. John Wiley & Sons, Inc. New York. 1966.

15. Intersociety Committee. Methods of Air Sampling and Analysis. American Health Association. Washington, DC. 1972.

16. Jones, P. W., R. D. Grammar, P. E. Strup, and T. B. Stanford. Environmental Science and Technology.------ *10:*806–810. 1976.

17. McNair Han Bunelli, E. J. Basic Gas Chromatography. Consolidated Printers. Berkeley. 1969.

18. Nelson, G. O. Controlled Test Atmospheres, Principles and Techniques. Ann Arbor. Ann Arbor Science Publishers. 1971. 247 p.

19. NIOSH Manual of Analytical Methods, Volumes 1, 2, 3, 4, 5, 6, 7. U.S. Department of Health and Human Services National Institute for Occupational Safety and Health. Center for Disease Control. 4676 Columbia Parkway, Cincinnati, Ohio 45226. April 1977–August 1981. May be available from the Superintendent of Documents, Government Printing Office, Washington, DC 20402. Stock Number/Price: Volume 1—017–033–00267–3/$13, Volume 2—017–033–00260–6/$11, Volume 3—017–033–00261–4/$14, Volume 4—017–033–00317–3/$7.25, Volume 5—017–033–00349–1/$10, Volume 6—017–033–00369–6/$9, and Volume 7—017–033–00396–5/$7. Prices subject to change. Foreign orders add 25 percent.

20. Schuetzle, D., T. J. Prater, and S. R. Ruddell. Sampling and Analysis of Emissions from Stationary Sources; I. Odor and Total Hydrocarbons. Journal of the Air Pollution Control Association. *25*(9):925–932. 1975.

21. Snyder, A. D., F. N. Hodgson, M. A. Kemmer and J. R. McKendree. Utility of Solid Sorbents for Sampling Organic Emissions from Stationary Sources. U.S. Environmental Protection Agency. Research Triangle Park, NC Publication No. EPA 600/2–76–201. July 1976. 71 p.

22. Tentative Method for Continuous Analysis of Total Hydrocarbons in the Atmosphere. Intersociety Committee, American Public Health Association. Washington, DC 1972. p. 184–186.

23. Zwerg, G., CRC Handbook of Chromatography, Volumes I and II. Sherma, Joseph (ed.). CRC Press. Cleveland. 1972.

I. Name of company _____ Date _____
Address _____
_____
Contacts _____ Phone_____
_____ _____
Process to be sampled_____
_____
_____
Duct or vent to be sampled_____
_____

II. Process description _____
_____
_____
_____
_____
Raw material _____
_____
_____
Products _____
_____
_____
Operating cycle
Check: Batch _____ Continuous _____ Cyclic _____
Timing of batch or cycle _____
Best time to test _____

Figure 18-1. Preliminary survey data sheet.

III. Sampling site

A. Description

Site description _____

Duct shape and size _____

Material _____

Wall thickness _____inches

Upstream distance _____inches _____diameter

Downstream distance_____inches _____diameter

Size of port _____

Size of access area _____

Hazards _____Ambient temp. _____°F

B. Properties of gas stream

Temperature _____°C _____°F, Data source _____

Velocity _____, Data source _____

Static pressure ___inches H_2O, Data source _____

Moisture content _____%, Data source _____

Particulate content _____, Data source _____

Gaseous components

N_2	_____%	Hydrocarbons	_____ ppm
O_2	_____%	_____	_____
CO	_____%	_____	_____
CO_2	_____%	_____	_____
SO_2	_____%	_____	_____

Hydrocarbon components

_____	_____ ppm
_____	_____ ppm
_____	_____ ppm
_____	_____ ppm
_____	_____ ppm
_____	_____ ppm

Figure 18-1 (continued). Preliminary survey data sheet.

C. Sampling considerations

Location to set up GC _____

_____

Special hazards to be considered _____

_____

Power available at duct _____

Power available for GC _____

Plant safety requirements _____

_____

Vehicle traffic rules _____

_____

Plant entry requirements _____

_____

Security agreements _____

_____

Potential problems _____

_____

D. Site diagrams. (Attach additional sheets if required).

Figure 18-1 (continued). Preliminary survey data sheet.

Components to be analyzed	Expected concentration

Suggested chromatographic column _____

_____

Column flow rate ____ml/min Head pressure____ mm Hg

Column temperature:

Isothermal _____°C

Programmed from _____°C to ____°C at ____°C/min

Injection port/sample loop temperature _____°C

Detector temperature _____°C

Detector flow rates: Hydrogen _____ml/min.

head pressure____ mm Hg

Air/Oxygen _____ml/min,

head pressure____ mm Hg

Chart speed _____ inches/minute

Compound data:

Compound	Retention time	Attenuation

Figure 18-2. Chromatographic conditions data sheet.

Preparation of Standards in Tedlar Bags
and Calibration Curve

Standards Preparation Data:	Standards Mixture #1	Standards Mixture #2	Standards Mixture #3
Organic: _____			
Bag number or identification			
Dry gas meter calibration factor			
Final meter reading (liters)			
Initial meter reading (liters)			
Metered volume (liters)			
Average meter temperature (°K)			
Average meter pressure, gauge (mm Hg)			
Average atmospheric pressure (mm Hg)			
Average meter pressure, absolute (mm Hg)			
Syringe temperature (°K) (Section 6.2.2.1)			
Syringe pressure, absolute (mm Hg) (Section 6.2.2.1)			
Volume of gas in syringe (ml) (Section 6.2.2.1)			
Density of liquid organic (g/ml) (Section 6.2.2.2)			
Volume of liquid in syringe (µl) (Section 6.2.2.2)			
GC Operating Conditions:			
Sample loop volume (ml)			
Sample loop temperature (°C)			
Carrier gas flow rate (ml/min)			
Column temperature			
Initial (°C)			
Rate change (°C/min)			
Final (°C)			
Organic Peak Identification and Calculated Concentrations:			
Injection time (24-hr clock)			
Distance to peak (cm)			
Chart speed (cm/min)			
Organic retention time (min)			
Attenuation factor			
Peak height (mm)			
Peak area (mm^2)			
Peak area x attenuation factor (mm^2)			
Calculated concentration (ppm) (Equation 18-3 or 18-4)			

Plot peak area x attenuation factor against calculated concentration to obtain calibration curve.

Figure 18-3. Standards prepared in Tedlar bags and calibration curve.

Flowmeter Calibration

Flowmeter number or identification _____
Flowmeter type _____
Calibration device (x): Bubble meter___ Spirometer___ Wet test meter___
Readings at laboratory conditions:
Laboratory temperature (T_{lab}) _____ °K
Laboratory barometric pressure (P_{lab}) _____ mm Hg
Flow data:

Flowmeter			Calibration device		
reading (as marked)	temp. (°K)	pressure (absolute)	Time (min)	gas volume[a]	flow rate[b]

a = Volume of gas measured by calibration device, corrected to standard conditions (liters).

b = Calibration device gas volume/time.

Plot flowmeter reading against flow rate (standard conditions), and draw a smooth curve. If the flowmeter being calibrated is a rotameter or other flow device that is viscosity dependent, it may be necessary to generate a "family" of calibration curves that cover the operating pressure and temperature ranges of the flowmeter.

While the following technique should be verified before application, it may be possible to calculate flow rate readings for rotameters at standard conditions Q_{std} as follows:

$$Q_{std} = Q_{lab}\left(\frac{760 \times T_{lab}}{P_{lab} \times 293}\right)^{1/2}$$

Flow rate (laboratory conditions)	Flow rate (standard conditions)

Figure 18-4. Flowmeter calibration.

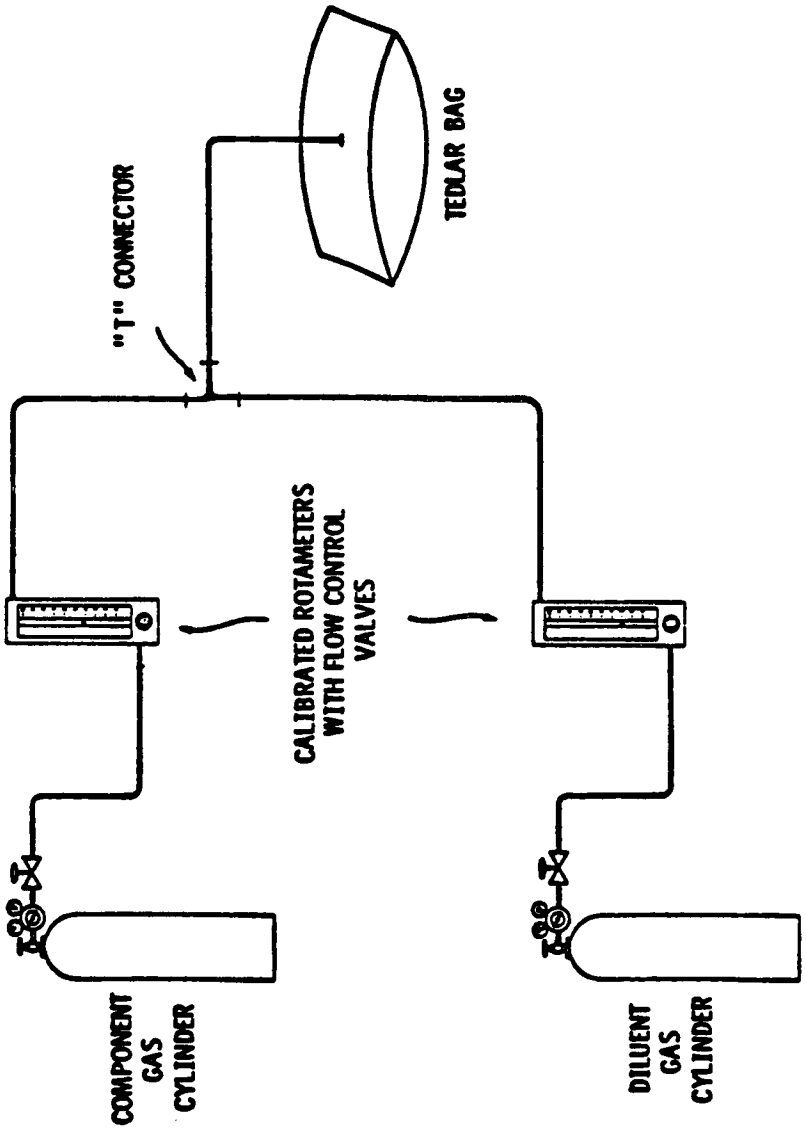

Figure 18-5. Single-stage calibration gas dilution system.

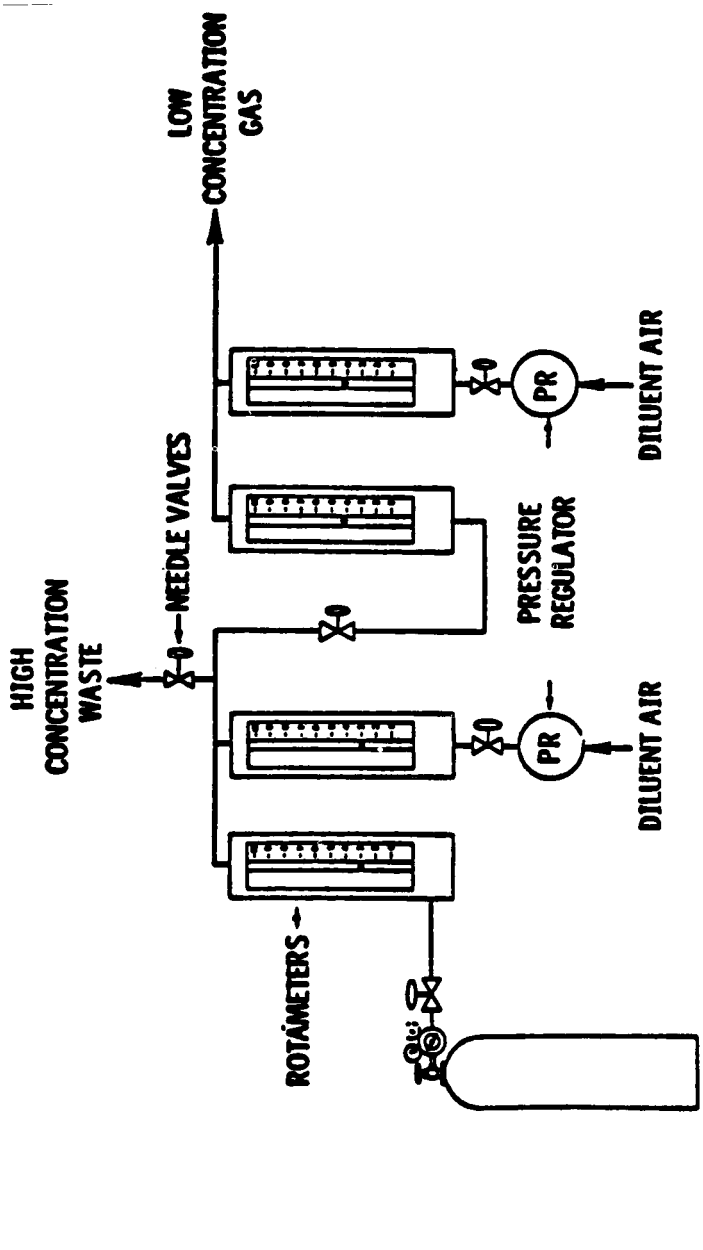

Figure 18-6. Two-stage dilution apparatus.

Preparation of Standards by Dilution of Cylinder Standard

Cylinder standard: Organic _____ Certified concentration _____ ppm

Standards Preparation Data: Date _____

Stage 1	Mixture 1	Mixture 2	Mixture 3
Standard gas flowmeter reading			
Diluent gas flowmeter reading			
Laboratory temperature (°K)			
Barometric pressure (mm Hg)			
Flowmeter gage pressure (mm Hg)			
Flow rate cylinder gas at standard conditions (ml/min)			
Flow rate diluent gas at standard conditions (ml/min)			
Calculated concentration (ppm)			
Stage 2 (if used)			
Standard gas flowmeter reading			
Diluent gas flowmeter reading			
Flow rate stage 1 gas at standard conditions (ml/min)			
Flow rate diluent gas at standard conditions (ml/min)			
Calculated concentration (ppm)			
GC Operating Conditions:			
Sample loop volume (ml)			
Sample loop temperature (°C)			
Carrier gas flow rate (ml/min)			
Column temperature:			
Initial (°C)			
Program rate (°C/min)			
Final (°C)			
Organic Peak Identification and Calculated Concentrations:			
Injection time (24-hr clock)			
Distance to peak (cm)			
Chart speed (cm/min)			
Retention time (min)			
Attenuation factor			
Peak area (mm^2)			
Peak area x attenuation factor			

Plot peak area x attenuation factor against calculated concentration to obtain calibration curve.

Figure 18-7. Standards prepared by dilution of cylinder standard.

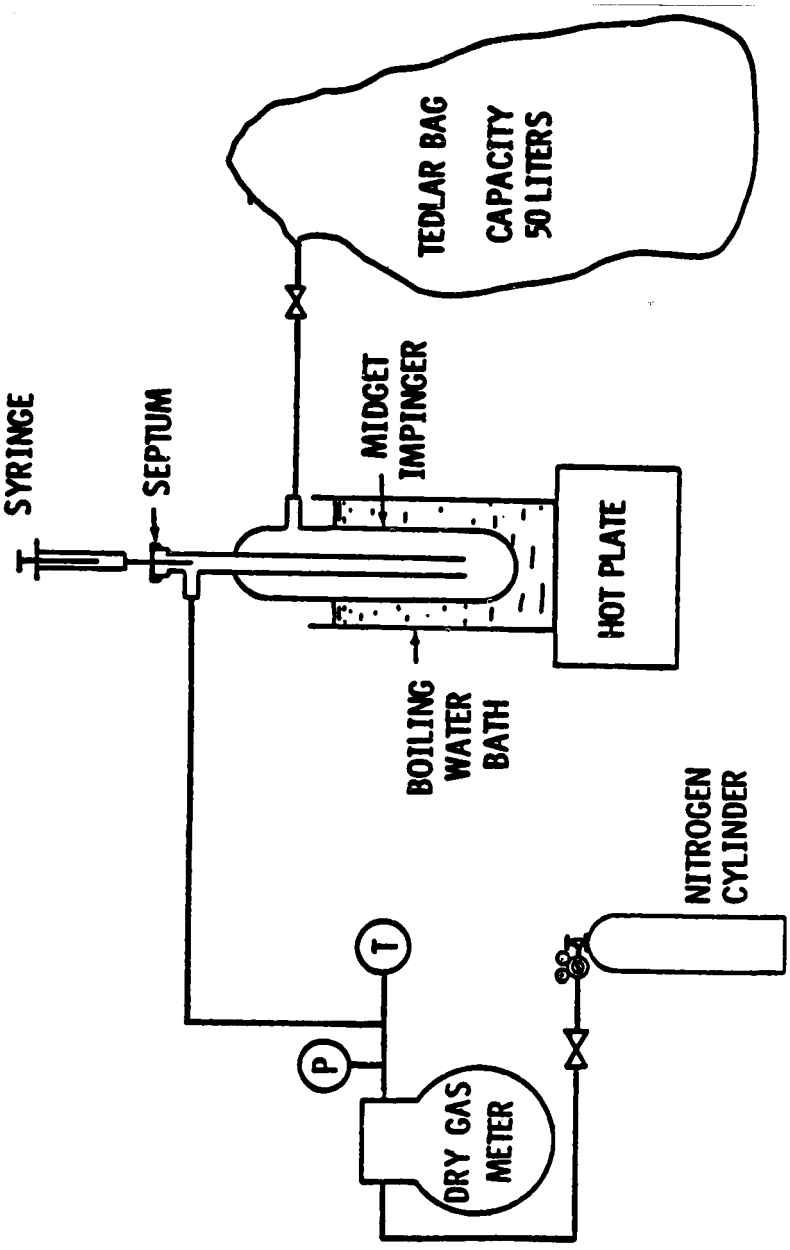

Figure 18-8. Apparatus for preparation of liquid materials.

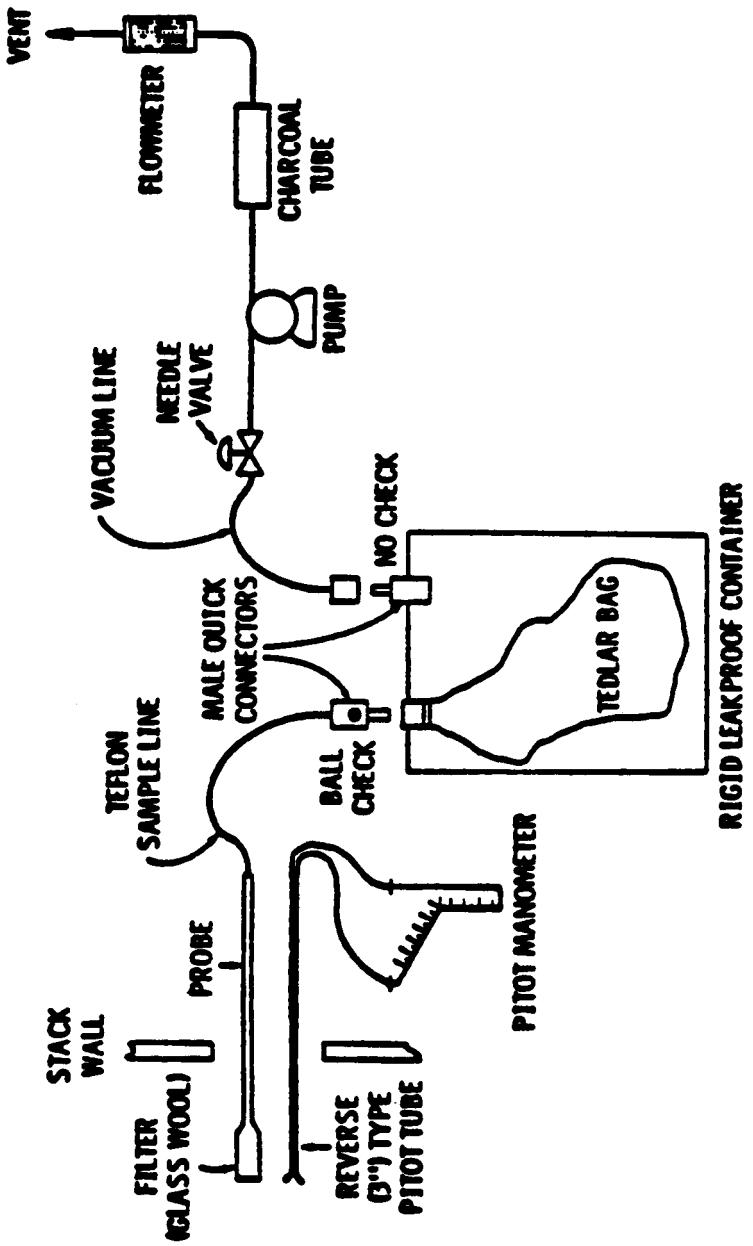

Figure 18-9. Integrated bag sampling train.

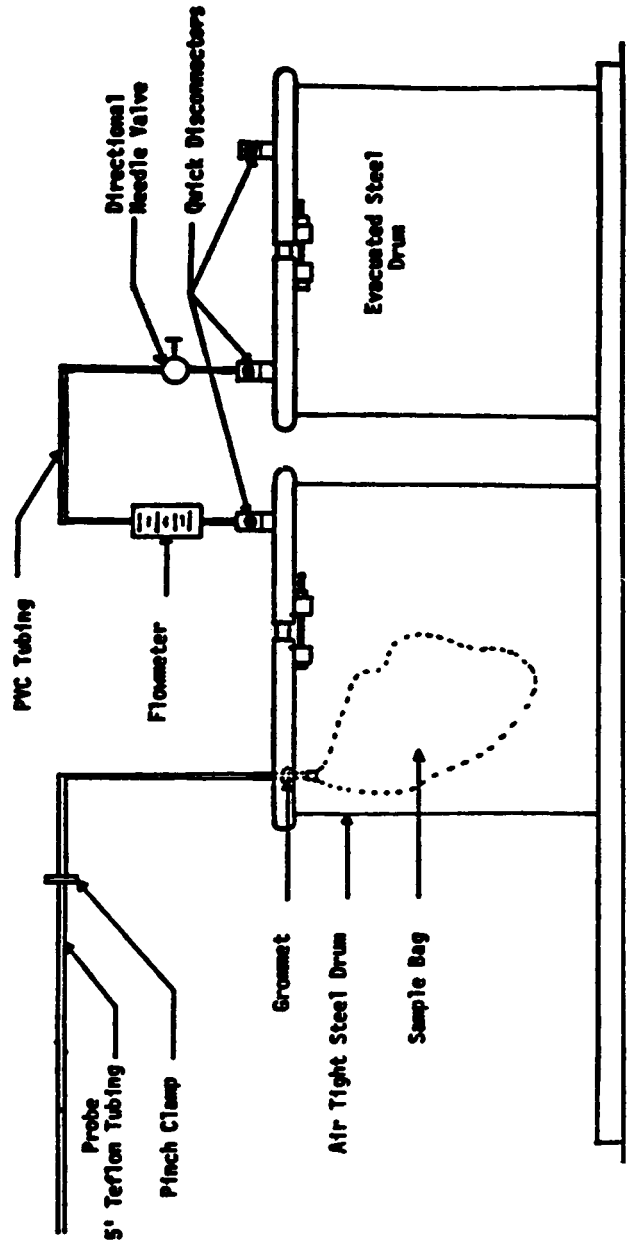

Figure 18-9a. Explosion risk gas sampling method.

Plant_____ Date_____

Site_____

	Sample 1	Sample 2	Sample 3
Source temperature (°C)			
Barometric pressure (mm Hg)			
Ambient temperature (°C)			
Sample flow rate (appr.)			
Bag number			
Start time			
Finish time			

Figure 18-10. Field sample data sheet - Tedlar bag collection method.

Plant_____ Date_____

Location_____

1. General information

Source temperature (°C)	_____
Probe temperature (°C)	_____
Ambient temperature (°C)	_____
Atmospheric pressure (mm)	_____
Source pressure (°Hg)	_____
Absolute source pressure (mm)	_____
Sampling rate (liter/min)	_____
Sample loop volume (ml)	_____
Sample loop temperature (°C)	_____
Columnar temperature:	
Initial (°C)/time (min)	_____
Program rate (°C/min)	_____
Final (°C)/time (min)	_____
Carrier gas flow rate (ml/min)	_____
Detector temperature (°C)	_____
Injection time (24-hour basis)	_____
Chart speed (mm/min)	_____
Dilution gas flow rate (ml/min)	_____
Dilution Gas used (symbol)	_____
Dilution ratio	_____

Figure 18-11. Field analysis data sheets.

2. Field Analysis Data - Calibration Gas

Run No._____ Time_____

Components	Area	Attenuation	A x A Factor	Conc. (ppm)

Run No._____ Time_____

Components	Area	Attenuation	A x A Factor	Conc. (ppm)

Run No._____ Time_____

Components	Area	Attenuation	A x A Factor	Conc. (ppm)

Figure 18-11 (continued). Field analysis data sheets.

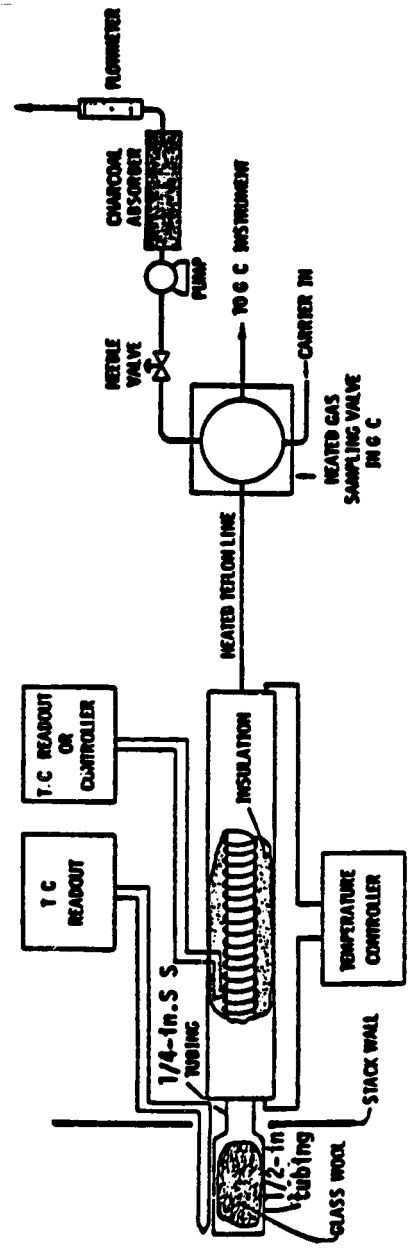

Figure 18-12. Direct interface sampling system.

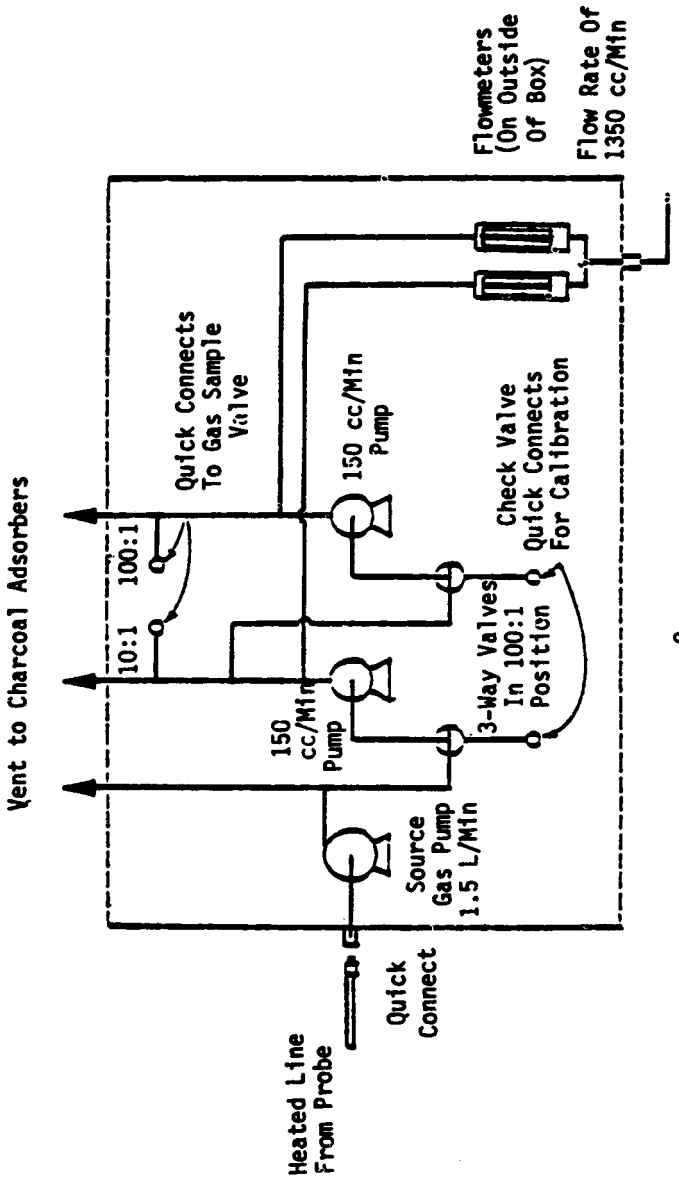

Figure 18-13. Schematic diagram of the heated box required for dilution of sample gas.

GASEOUS ORGANIC SAMPLING AND ANALYSIS CHECK LIST

(Respond with initials or number as appropriate)

		Date
1. Presurvey data:		
A. Grab sample collected	☐	
B. Grab sample analyzed for composition	☐	
Method GC	☐	☐
GC/MS	☐	☐
Other	☐	☐
C. GC–FID analysis performed	☐	
2. Laboratory calibration data:		
A. Calibration curves prepared	☐	
Number of components	☐	☐
Number of concentrations/component (3 required)	☐	☐
B. Audit samples (optional):		
Analysis completed	☐	
Verified for concentration	☐	
OK obtained for field work	☐	
3. Sampling procedures:		
A. Method:		
Bag sample	☐	☐
Direct interface	☐	☐
Dilution interface	☐	☐
B. Number of samples collected	☐	
4. Field analysis:		
A. Total hydrocarbon analysis performed	☐	
B. Calibration curve prepared	☐	
Number of components	☐	☐
Number of concentrations per component (3 required)	☐	☐

Figure 18–14. Sampling and analysis check.

GASEOUS ORGANIC SAMPLING AND ANALYSIS DATA

Plant
Date
Location

	Source sample 1	Source sample 2	Source sample 3
1. General information:			
Source temperature (°C)			
Probe temperature (°C)			
Ambient temperature (°C)			
Atmospheric pressure (mm Hg)			
Source pressure (mm Hg)			
Sampling rate (ml/min)			
Sample loop volume (ml)			
Sample loop temperature (°C)			
Sample collection time (24-hr basis)			
Column temperature:			
Initial (°C)			
Program rate (°C/min)			
Final (°C)			
Carrier gas flow rate (ml/min)			
Detector temperature (°C)			
Chart speed (cm/min)			
Dilution gas flow rate (ml/min)			
Diluent gas used (symbol)			
Dilution ratio			
Performed by (signature):			
Date:			

Figure 18–14. Sampling and analysis sheet.

METHOD 19—DETERMINATION OF SULFUR DIOXIDE REMOVAL EFFICIENCY AND PARTICULATE MATTER, SULFUR DIOXIDE, AND NITROGEN OXIDES EMISSION RATES

1. Applicability and Principle

1.1 Applicability. This method is applicable for (a) determining particulate matter (PM), sulfur dioxide (SO_2), and nitrogen oxides (NO_x) emission rates; (b) determining sulfur removal efficiencies of fuel pretreatment and SO_2 control devices; (c) determining overall reduction of potential SO_2 emissions from steam generating units or other sources as specified in applicable regulations; and (d) determining SO_2 rates based on fuel sampling and analysis procedures.

1.2 Principle.

1.2.1 Pollutant emission rates are determined from concentrations of PM, SO_2, or NO_x, and oxygen (O_2) or carbon dioxide (CO_2) along with F factors (ratios of combustion gas volumes to heat inputs).

1.2.2 An overall SO_2 emission reduction efficiency is computed from the efficiency of fuel pretreatment systems (optional) and the efficiency of SO_2 control devices.

1.2.3 The sulfur removal efficiency of a fuel pretreatment system is determined by fuel sampling and analysis of the sulfur and heat contents of the fuel before and after the pretreatment system.

1.2.4 The SO_2 removal efficiency of a control device is determined by measuring the SO_2 rates before and after the control device.

1.2.5 The inlet rates to SO_2 control systems and when SO_2 control systems are not

used, SO_2 emission rates to the atmosphere may be determined by fuel sampling and analysis (optional).

2. Emission Rates of Particulate Matter, Sulfur Dioxide, and Nitrogen Oxides

Select from the following sections the applicable procedure to compute the PM, SO_2, or NO_x emission rate (E) in ng/J (lb/million Btu). The pollutant concentration must be in ng/scm (lb/scf) and the F factor must be in scm/J (scf/million Btu). If the pollutant concentration (C) is not in the appropriate units, use the following table to make the proper conversion:

CONVERSION FACTORS FOR CONCENTRATION

From	To	Multiply by
g/scm	ng/scm	10^9
mg/scm	ng/scm	10^6
lb/scf	ng/scm	1.602×10^{13}
ppm SO_2	ng/scm	2.66×10^6
ppm NO_x	ng/scm	1.912×10^6
ppm SO_2	lb/scf	1.660×10^{-7}
ppm NO_x	lb/scf	1.194×10^{-7}

An F factor is the ratio of the gas volume of the products of combustion to the heat content of the fuel. The dry F factor (F_d) includes all components of combustion less water, the wet F factor (F_w) includes all components of combustion, and the carbon F factor (F_c) includes only carbon dioxide.

NOTE: Since F_w factors include water resulting only from the combustion of hydrogen in the fuel, the procedures using F_w factors are not applicable for computing E from steam generating units with wet scrubbers or with other processes that add water (e.g., steam injection)

2.1 Oxygen-Based F Factor, Dry Basis. When measurements are on a dry basis for both O_2 ($\%O_{2d}$) and pollutant (C_d) concentrations, use the following equation:

$$E=C_d\ F_d\ [20.9/(20.9-\%O_{2d})]$$

Eq. 19–1

2.2 Oxygen-Based F Factor, Wet Basis. When measurements are on a wet basis for both O_2 ($\%O_{2w}$) and pollutant (C_w) concentrations, use either of the following:

2.2.1 If the moisture fraction of ambient air (B_{wa}) is measured:

$$E=[C_w\ F_w 20.9]/[20.9(1-B_{wa})-\%O_{2w}]$$

Eq. 19–2

Instead of actual measurement, B_{wa} may be estimated according to the procedure below.

(NOTE: The estimates are selected to ensure that negative errors will not be larger than −1.5 percent. However, positive errors, or over-estimation of emissions, of as much as 5 percent may be introduced depending upon the geographic location of the facility and the associated range of ambient moisture):

2.2.1.1 B_{wa}=0.027. This value may be used at any location at all times.

2.2.1.2 B_{wa}=Highest monthly average of B_{wa} that occurred within the previous calendar year at the nearest Weather Service Station. This value shall be determined annually and may be used as an estimate for the entire current calendar year.

2.2.1.3 B_{wa}=Highest daily average of B_{wa} that occurred within a calendar month at the nearest Weather Service Station, calculated from the data from the past 3 years. This value shall be computed for each month and may be used as an estimate for the current respective calendar month.

2.2.2 If the moisture fraction (B_{ws}) of the effluent gas is measured:

$$E=C_w\ F_d\ \{20.9/[20.9(1-B_{ws})-\%O_{2w}]\}$$

Eq. 19–3

2.3 Oxygen-Based F Factor, Dry/Wet Basis.

2.3.1 When the pollutant concentration is measured on a wet basis (C_w) and O_2 concentration is measured on a dry basis ($\%O_{2d}$), use the following equation:

$$E=[(C_w\ F_d)/(1-B_{ws})]/[20.9/(20.9-\%O_{2d})]$$

Eq. 19–4

2.3.2 When the pollutant concentration is measured on a dry basis (C_d) and the O_2 concentration is measured on a wet basis ($\%O_{2w}$), use the following equation:

$$E=[C_d\ F_d 20.9]/[20.9-O_{2w}/(1-B_{ws})]$$

Eq. 19–5

2.4 Carbon Dioxide-Based F Factor, Dry Basis. When measurements are on a dry basis for both CO_2 ($\%CO_{2d}$) and pollutant (C_d) concentrations, use the following equation:

$$E=C_d\ F_c(100/\%CO_{2d})$$

Eq. 19–6

2.5 Carbon Dioxide-Based F Factor, Wet Basis. When measurements are on a wet basis for both CO_2 ($\%CO_{2w}$) and pollutant (C_w) concentrations, use the following equation:

$$E=C_w\ F_c\ (100/\%CO_{2w})$$

Eq. 19–7

2.6 Carbon Dioxide-Based F Factor, Dry/Wet Basis.

2.6.1 When the pollutant concentration is measured on a wet basis (C_w) and CO_2 concentration is measured on a dry basis ($\%CO_{2d}$), use the following equation:

$$E=[C_w\ F_c/(1-B_{ws})]\ (100/\%CO_{2d})$$

Eq. 19–8

2.6.2 When the pollutant concentration is measured on a dry basis (C_d) and CO_2 concentration is measured on a wet basis ($\%CO_{2w}$), use the following equation:

$$E=C_d(1-B_{ws})F_c(100/\%CO_{2w})$$

Eq. 19–9

2.7 Direct-Fired Reheat Fuel Burning. The effect of direct-fired reheat fuel burning (for the purpose of raising the temperature of the exhaust effluent from wet scrubbers to above the moisture dew-point) on emission rates will be less than ±1.0 percent and, therefore, may be ignored.

2.8 Combined Cycle-Gas Turbine Systems. For gas turbine-steam generator combined cycle systems, determine the emissions from the steam generating unit or the percent reduction in potential SO_2 emissions as follows:

2.8.1 Compute the emission rate from the steam generating unit using the following equation:

$$E_{bo}=E_{co}+(H_g/H_b)(E_{co}-E_g)$$

Eq. 19–10

where:

E_{bo}=pollutant emission rate from the steam generating unit, ng/J (lb/million Btu).

E_{co}=pollutant emission rate in combined effluent, ng/J (lb/million Btu).

E_g=pollutant rate from gas turbine, ng/J (lb/million Btu).

H_b=heat input rate to the steam generating unit from fuels fired in the steam generating unit, J/hr (million Btu/hr).

H_g=heat input rate to gas turbine from all fuels fired in the gas turbine, J/hr (million Btu/hr).

2.8.1.1 Use the test methods and procedures section of Subpart GG to obtain E_{co} and E_g. Do not use F_w factors for determining E_g or E_{co}. If an SO_2 control device is used, measure E_{co} after the control device.

2.8.1.2 Suitable methods shall be used to determine the heat input rates to the steam generating units (H_b) and the gas turbine (H_g).

2.8.2 If a control device is used, compute the percent of potential SO_2 emissions (% P_s) using the following equations:

$$E_{bi}=E_{ci}-(H_g/H_b)(E_{ci}-E_g)$$

Eq. 19–11

$$\%\ P_s=100\ (1-E_{bo}/E_{bi})$$

Eq. 19–12

where:

E_{bi}=pollutant rate from the steam generating unit, ng/J (lb/million Btu)

E_{ci}=pollutant rate in combined effluent, ng/J (lb/million Btu).

Use the test methods and procedures section of Subpart GG to obtain E_{ci} and E_g. Do not use F_w factors for determining E_g or E_{ci}.

3. F Factors

Use an average F factor according to Section 3.1 or determine an applicable F factor according to Section 3.2. If combined fuels are fired, prorate the applicable F factors using the procedure in Section 3.3.

3.1 Average F Factors. Average F factors (F_d, F_w, or F_c) from Table 19–1 may be used.

TABLE 19–1—F FACTORS FOR VARIOUS FUELS [1]

Fuel type	F_d		F_w		F_c	
	dscm/J	dscf/10^6 Btu	wscm/J	wscf/10^6 Btu	scm/J	scf/10^6 Btu
Coal:						
Anthracite [2]	2.71×10^{-7}	10,100	2.83×10^{-7}	10,540	0.530×10^{-7}	1,970
Bituminous [2]	2.63×10^{-7}	9,780	2.86×10^{-7}	10,640	0.484×10^{-7}	1,800
Lignite	2.65×10^{-7}	9,860	3.21×10^{-7}	11,950	0.513×10^{-7}	1,910
Oil [3]	2.47×10^{-7}	9,190	2.77×10^{-7}	10,320	0.383×10^{-7}	1,420
Gas:						
Natural	2.43×10^{-7}	8,710	2.85×10^{-7}	10,610	0.287×10^{-7}	1,040
Propane	2.34×10^{-7}	8,710	2.74×10^{-7}	10,200	0.321×10^{-7}	1,190
Butane	2.34×10^{-7}	8,710	2.79×10^{-7}	10,390	0.337×10^{-7}	1,250
Wood	2.48×10^{-7}	9,240	.....	.....	0.492×10^{-7}	1,830
Wood Bark	2.58×10^{-7}	9,600	.....	.....	0.516×10^{-7}	1,920
Municipal	2.57×10^{-7}	9,570	.....	.....	0.488×10^{-7}	1,820
Solid Waste	.....					

[1] Determined at standard conditions: 20 °C (68 °F) and 760 mm Hg (29.92 in. Hg).
[2] As classified according to ASTM D388–77.
[3] Crude, residual, or distillate.

3.2 Determined F Factors. If the fuel burned is not listed in Table 19–1 or if the owner or operator chooses to determine an F factor rather than use the values in Table 19–1, use the procedure below:

3.2.1 Equations. Use the equations below, as appropriate, to compute the F factors:

$$F_d = K[(K_{hd}\%H) + (K_c\%C) + (K_s\%S) + (K_n\%N) - (K_o\%0)]/GCV_w$$

Eq. 19–13

$$F_w = K[(K_{hw}\%H) + (K_c\%C) + (K_s\%S) + (K_n\%N) - (K_o\%0) + (K_w\%H_2O)]/GCV_w$$

Eq. 19–14

$$F_c=K(K_{cc}\%C)/GCV$$

Eq. 19–15

(NOTE.— Omit the $\%H_2O$ term in the equations for F_w if %H and %0 include the unavailable hydrogen and oxygen in the form of H_2O.)

where:

F_d, F_w, F_c=volumes of combustion components per unit of heat content, scm/J (scf/million Btu).

%H, %C, %S, %N, %0, and $\%H_2O$=concentrations of hydrogen, carbon, sulfur, nitrogen, oxygen, and water from an ultimate analysis of fuel, weight percent.

GCV=gross calorific value of the fuel consistent with the ultimate analysis, kJ/kg (Btu/lb).

K=conversion factor, 10^{-5} (kJ/J)/(%) [10^6 Btu/million Btu].

K_{hd}=22.7 (scm/kg))[(3.64 (scf/lb)/(%)].

K_c=9.57 (scm/kg)[(1.53 (scf/lb)/(%)].

K_s=3.54 (scm/kg) [(0.57 (scf/lb)/(%)].

K_n=0.86 (scm/kg [0.14 (scf/lb)/(%)].

K_o=2.85 (scm/kg) [0.46 (scf/lb)/(%)].

K_{hw}=34.74 (scm/kg) [(5.57 (scf/lb)/(%)].

K_w=1.30 (scm/kg) [(0.21 (scf/lb)/(%)].

K_{cc}=2.0 (scm/kg) [(0.321 (scf/lb)/(%)].

3.2.2 Use applicable sampling procedures in Section 5.2.1 or 5.2.2 to obtain samples for analyses.

3.2.3 Use ASTM D3176–74 (incorporated by reference—see §60.17) for ultimate analysis of the fuel.

3.2.4 Use applicable methods in Section 5.2.1 or 5.2.2 to determine the heat content of solid or liquid fuels. For gaseous fuels, use ASTM D1826–77 (IBR—see §60.17) to determine the heat content.

3.3 F Factors for Combination of Fuels. If combinations of fuels are burned, use the following equations, as applicable unless otherwise specified in applicable subpart:

$$F_d = \sum_{k=1}^{n} X_k F_{dk}$$

Eq. 19-16

$$F_w = \sum_{k=1}^{n} X_k F_{wk}$$

Eq. 19-17

$$F_c = \sum_{k=1}^{n} X_k F_{ck}$$

Eq. 19-18

where:

X_k=fraction of total heat input from each type of fuel k.

n=number of fuels being burned in combination.

4. Determination of Average Pollutant Rates

4.1 Average Pollutant Rates from Hourly Values. When hourly average pollutant rates (E_h), inlet or outlet, are obtained (e.g., CEMS values), compute the average pollutant rate (E_a) for the performance test period (e.g., 30 days) specified in the applicable regulation using the following equation:

$$E_a = (1/H) \sum_{j=1}^{n} E_{hj}$$

Eq. 19-19

where:

E_a=average pollutant rate for the specified performance test period, ng/J (lb/million Btu).

E_h=hourly average pollutant, ng/J (lb/million Btu).

H=total number of operating hours for which pollutant rates are determined in the performance test period.

4.2 Average Pollutant Rates from Other than Hourly Averages. When pollutant rates

are determined from measured values representing longer than 1-hour periods (e.g., daily fuel sampling and analyses or Method 6B values), or when pollutant rates are determined from combinations of 1-hour and longer than 1-hour periods (e.g., CEMS and Method 6B values), compute the average pollutant rate (E_a) for the performance test period (e.g., 30 days) specified in the applicable regulation using the following equation:

$$E_a = \left[\sum_{j=1}^{D} (n_d E_d)_j\right] / \sum_{j=1}^{D} n_{dj} \qquad \text{Eq. 19-20}$$

where:

E_d=average pollutant rate for each sampling period (e.g., 24-hr Method 6B sample or 24-hr fuel sample) or for each fuel lot (e.g., amount of fuel bunkered), ng/J (lb/million Btu).

n_d=number of operating hours of the affected facility within the performance test period for each E_d determined.

D=number of sampling periods during the performance test period.

4.3 Daily Geometric Average Pollutant Rates from Hourly Values. The geometric average pollutant rate (E_{ga}) is computed using the following equation:

$$E_{ga} = \mathrm{EXP}\left[\left(\frac{1}{n}\right)\sum_{j=1}^{n}\left[\ln(E_{hj})\right]\right] \qquad \text{Eq. 19-20a}$$

where:

E_{ga} = daily geometric average pollutant rate, ng/J (lbs/million Btu) or ppm corrected to 7 percent O_2.

E_{hj} = hourly arithmetic average pollutant rate for hour ''j,'' ng/J (lb/million Btu) or ppm corrected to 7 percent O_2.

n = total number of hourly averages for which pollutant rates are available within the 24 hr midnight to midnight daily period.

ln = natural log of indicated value.

EXP = the natural logarithmic base (2.718) raised to the value enclosed by brackets.

5. Determination of Overall Reduction in Potential Sulfur Dioxide Emission

5.1 Overall Percent Reduction. Compute the overall percent SO_2 reduction ($\%R_o$) using the following equation:

$$\%R_o = 100\ [1.0 - (1.0 - \%R_f/100)(1.0 - \%R_g/100)] \qquad \text{Eq. 19–21}$$

where:

$\%R_f$=SO_2 removal efficiency from fuel pretreatment, percent.

$\%R_g$=SO_2 removal efficiency of the control device, percent.

5.2 Pretreatment Removal Efficiency (Optional). Compute the SO_2 removal efficiency from fuel pretreatment ($\%R_f$) for the averaging period (e.g., 90 days) as specified in the applicable regulation using the following equation:

$$\%R_f = 100\ (1.0 - [\sum_{j=1}^{n} (\%S_{pj}/GCV_{pj})\ L_{pj}]/[\sum_{j=1}^{n} (\%S_{rj}/GCV_{rj})\ L_{rj}]) \qquad \text{Eq. 19-22}$$

where:

$\%S_p$, $\%S_r$=sulfur content of the product and raw fuel lots, respectively, dry basis weight percent.

GCV_p, GCV_r=gross calorific value for the product and raw fuel lots, respectively, dry basis, kg/kg (Btu/lb).

L_p, L_r=weight of the product and raw fuel lots, respectively, metric ton (ton).

n=number of fuel lots during the averaging period.

NOTE: In calculating $\%R_f$, include %S and GCV values for all fuel lots that are not pretreated and are used during the averaging period.

5.2.1 Solid Fossil (Including Waste) Fuel—Sampling and Analysis.

NOTE: For the purposes of this method, raw fuel (coal or oil) is the fuel delivered to the desulfurization (pretreatment) facility. For oil, the input oil to the oil desulfurization process (e.g., hydrotreatment) is considered to be the raw fuel.

5.2.1.1 Sample Increment Collection. Use ASTM D2234–76 (IBR—see §60.17), Type I, Conditions A, B, or C, and systematic spacing. As used in this method, systematic spacing is intended to include evenly spaced increments in time or increments based on equal weights of coal passing the collection area.

As a minimum, determine the number and weight of increments required per gross sample representing each coal lot according to Table 2 or Paragraph 7.1.5.2 of ASTM D2234–76. Collect one gross sample for each lot of raw coal and one gross sample for each lot of product coal.

5.2.1.2 ASTM Lot Size. For the purpose of Section 5.2 (fuel pretreatment), the lot size of product coal is the weight of product coal from one type of raw coal. The lot size of raw coal is the weight of raw coal used to produce one lot of product coal. Typically, the lot size is the weight of coal processed in a 1-day (24-hour) period. If more than one type of coal is treated and produced in 1 day, then gross samples must be collected and analyzed for each type of coal. A coal lot size equaling the 90-day quarterly fuel quantity for a steam generating unit may be used if representative sampling can be conducted for each raw coal and product coal.

NOTE: Alternative definitions of lot sizes may be used, subject to prior approval of the Administrator.

5.2.1.3 Gross Sample Analysis. Use ASTM D2013–72 to prepare the sample, ASTM D3177–75 or ASTM D4239–85 to determine sulfur content (%S), ASTM D3173–73 to determine moisture content, and ASTM D2015–77 or ASTM D3286–85 to determine gross calorific value (GCV) (all methods cited IBR—see §60.17) on a dry basis for each gross sample.

5.2.2 Liquid Fossil Fuel—Sampling and Analysis. See NOTE under Section 5.2.1.

5.2.2.1 Sample Collection. Follow the procedures for continuous sampling in ASTM D270–65 (Reapproved 1975) (IBR—see §60.17) for each gross sample from each fuel lot.

5.2.2.2 Lot Size. For the purpose of Section 5.2 (fuel pretreatment), the lot size of a product oil is the weight of product oil from one pretreatment facility and intended as one shipment (ship load, barge load, etc.). The lot size of raw oil is the weight of each crude liquid fuel type used to produce a lot of product oil.

NOTE: Alternative definitions of lot sizes may be used, subject to prior approval of the Administrator.

5.2.2.3 Sample Analysis. Use ASTM D129–64 (Reapproved 1978), ASTM D1552–83, or ASTM D4057–81 to determine the sulfur content (%S) and ASTM D240–76 (all methods cited IBR—see §60.17) to determine the GCV of each gross sample. These values may be assumed to be on a dry basis. The owner or operator of an affected facility may elect to determine the GCV by sampling the oil combusted on the first steam generating unit operating day of each calendar month and then using the lowest GCV value of the three GCV values per quarter for the GCV of all oil combusted in that calendar quarter.

5.2.3 Use appropriate procedures, subject to the approval of the Administrator, to determine the fraction of total mass input derived from each type of fuel.

5.3 Control Device Removal Efficiency. Compute the percent removal efficiency ($\%R_g$ of the control device using the following equation:

$$\%R_g = 100[1.0 - E_{ao}/E_{ai}] \qquad \text{Eq. 19–23}$$

where:

E_{ao}, E_{ai}=average pollutant rate of the control device, outlet and inlet, respectively, for the performance test period, ng/J (lb/million Btu).

5.3.1 Use continuous emission monitoring systems or test methods, as appropriate, to determine the outlet SO_2 rates and, if appropriate, the inlet SO_2 rates. The rates may be determined as hourly (E_h) or other sampling period averages (E_d). Then, compute the average pollutant rates for the performance test period (E_{ao} and E_{ai}) using the procedures in Section 4.

5.3.2 As an alternative, as-fired fuel sampling and analysis may be used to determine inlet SO_2 rates as follows:

5.3.2.1 Compute the average inlet SO_2 rate (E_{di}) for each sampling period using the following equation:

$$E_{di} = K\,(\%S/GCV) \qquad \text{Eq. 19–24}$$

where:

E_{di}=average inlet SO_2 rate for each sampling period d, ng/J (lb/million Btu)

% S=sulfur content of as-fired fuel lot, dry basis, weight percent.

GCV=gross calorific value of the fuel lot consistent with the sulfur analysis, kJ/kg (Btu/lb).

$K = 2\times10^7[(kg)(ng)/(\%)(J)]\{2\times10^4(lb)(Btu/(\%))(million\ Btu)\}$

After calculating E_{di} use the procedures in Section 4.2 to determine the average inlet SO_2 rate for the performance test period (E_{ai}).

5.3.2.2 Collect the fuel samples from a location in the fuel handling system that provides a sample representative of the fuel bunkered or consumed during a steam generating unit operating day.

For the purpose of as-fired fuel sampling under Section 5.3.2 or Section 6, the lot size for coal is the weight of coal bunkered or consumed during each steam generating unit operating day. The lot size for oil is the weight of oil supplied to the ''day'' tank or consumed during each steam generating unit operating day.

For reporting and calculation purposes, the gross sample shall be identified with the calendar day on which sampling began. For steam generating unit operating days when a coal-fired steam generating unit is operated without coal being added to the bunkers, the coal analysis from the previous ''as bunkered'' coal sample shall be used until coal is bunkered again. For steam generating unit operating days when an oil-fired steam generating unit is operated without oil being added to the oil ''day'' tank, the oil analysis from the previous day shall be used until the ''day'' tank is filled again.

Alternative definitions of fuel lot size may be used, subject to prior approval of the Administrator.

5.3.2.3 Use ASTM procedures specified in Section 5.2.1 or 5.2.2 to determine the sulfur contents (%S) and gross calorific values (GCV).

5.4 Daily Geometric Average Percent Reduction from Hourly Values. The geometric average percent reduction ($\%R_{ga}$) is computed using the following equation:

$$\%R_{ga} = 100\left[1 - EXP\left[\left(\frac{1}{n}\right)\sum_{j=1}^{n} 1n\left(E_{jo} / E_{ji}\right)\right]\right] \qquad \text{Eq. 19-24a}$$

where:

$\%R_{ga}$ = daily geometric average percent reduction.

E_{jo}, E_{ji} = matched pair hourly arithmetic average pollutant rate, outlet and inlet, respectively, ng/J (lb/million Btu) or ppm corrected to 7 percent O_2.

n = total number of hourly averages for which paired inlet and outlet pollutant rates are available within the 24-hr midnight to midnight daily period.

ln = natural log of indicated value.

EXP = the natural logarithmic base (2.718) raised to the value enclosed by brackets.

NOTE: The calculation includes only paired data sets (hourly average) for the inlet and outlet pollutant measurements.

6. Sulfur Retention Credit for Compliance Fuel

If fuel sampling and analysis procedures in Section 5.2.1 are being used to determine average SO_2 emission rates (E_{as}) to the atmosphere from a coal-fired steam generating unit when there is no SO_2 control device, the following equation may be used to adjust the emission rate for sulfur retention credits (no credits are allowed for oil-fired systems) (E_{di}) for each sampling period using the following equation:

$$E_{di} = 0.97\ K\ (\%S/GCV) \qquad \text{Eq. 19–25}$$

where:

E_{di} = average inlet SO_2 rate for each sampling period d, ng/J (lb/million Btu)

%S = sulfur content of as-fired fuel lot, dry basis, weight percent.

GCV = gross calorific value of the fuel lot consistent with the sulfur analysis, kJ/kg (Btu/lb).

$K = 2\times10^7$ [(kg)(ng)/(%)(J)] {2×10^4(lb)(Btu/(%))(million Btu)}

After calculating E_{di} use the procedures in Section 4–2 to determine the average SO_2 emission rate to the atmosphere for the performance test period (E_{ao}).

7. Determination of Compliance When Minimum Data Requirement Is Not Met

7.1 Adjusted Emission Rates and Control Device Removal Efficiency. When the minimum data requirement is not met, the Administrator may use the following adjusted emission rates or control device removal efficiencies to determine compliance with the applicable standards.

7.1.1 Emission Rate. Compliance with the emission rate standard may be determined by using the lower confidence limit of the emission rate (E_{ao}*) as follows:

$$E_{ao}^* = E_{ao} - t_{0.95}\ S_o \qquad \text{Eq. 19–26}$$

where:

S_o = standard deviation of the hourly average emission rates for each performance test period, ng/J (lb/million Btu).

$t_{0.95}$ = values shown in Table 19–2 for the indicated number of data points n.

7.1.2 Control Device Removal Efficiency. Compliance with the overall emission reduction ($\%R_o$) may be determined by using the lower confidence limit of the emission rate (E_{ao}*) and the upper confidence limit of the inlet pollutant rate (E_{ai}*) in calculating the

control device removal efficiency ($\%R_g$) as follows:

$$\%R_g = 100\ [1.0 - E_{ao}^*/E_{ai}^*] \qquad \text{Eq. 19–27}$$

$$E_{ai}^* = E_{ai} + t_{0.95}\ S_i$$

Eq. 19–28

where:

S_i=standard deviation of the hourly average inlet pollutant rates for each performance test period, ng/J (lb/million Btu).

TABLE 19–2—VALUES FOR $T_{0.95}$

n[1]	$t_{0.95}$	n[1]	$t_{0.95}$	n[1]	$t_{0.95}$
2	6.31	8	1.89	22–26	1.71
3	2.42	9	1.86	27–31	1.70
4	2.35	10	1.83	32–51	1.68
5	2.13	11	1.81	59–91	1.67
6	2.02	12–16	1.77	92–151	1.66
7	1.94	17–21	1.73	152 or more	1.65

[1] The values of this table are corrected for n-1 degrees of freedom. Use n equal to the number (H) of hourly average data points.

7.2 Standard Deviation of Hourly Average Pollutant Rates. Compute the standard deviation (S_e) of the hourly average pollutant rates using the following equation:

$$S_e = \sqrt{(1/H) - (1/H_r)} \quad \left(\sqrt{\left[\sum_{j=1}^{H} (E_{hj} - E_a)^2\right]/(H - 1)}\ \right) \qquad \text{Eq. 19-29}$$

where:

S=standard deviation of the hourly average pollutant rates for each performance test period, ng/J (lb/million Btu).

H_r=total numbers of hours in the performance test period (e.g., 720 hours for 30-day performance test period).

Equation 19–29 may be used to compute the standard deviation for both the outlet (S_o) and, if applicable, inlet (S_i) pollutant rates.

METHOD 20—DETERMINATION OF NITROGEN OXIDES, SULFUR DIOXIDE, AND DILUENT EMISSIONS FROM STATIONARY GAS TURBINES

1. *Principle and Applicability*

1.1 Applicability. This method is applicable for the determination of nitrogen oxides (NO_x), sulfur dioxide (SO_2), and a diluent gas, either oxygen (O_2) or carbon dioxide (CO_2), emissions from stationary gas turbines. For the NO_x and diluent concentration determinations, this method includes: (1) Measurement system design criteria; (2) Analyzer performance specifications and performance test procedures; and (3) Procedures for emission testing.

1.2 Principle. A gas sample is continuously extracted from the exhaust stream of a stationary gas turbine; a portion of the sample stream is conveyed to instrumental analyzers for determination of NO_x and diluent content. During each NO_x and diluent determination, a separate measurement of SO_2 emissions is made, using Method 6, or its equivalent. The diluent determination is used to adjust the NO_x and SO_2 concentrations to a reference condition.

2. *Definitions*

2.1 Measurement System. The total equipment required for the determination of a gas concentration or a gas emission rate. The system consists of the following major subsystems:

2.1.1 Sample Interface. That portion of a system that is used for one or more of the following: sample acquisition, sample transportation, sample conditioning, or protection of the analyzers from the effects of the stack effluent.

2.1.2 NO_x Analyzer. That portion of the system that senses NO_x and generates an output proportional to the gas concentration.

2.1.3 O_2 Analyzer. That portion of the system that senses O_2 and generates an output proportional to the gas concentration.

2.1.4 CO_2 Analyzer. That portion of the system that senses CO_2 and generates an output proportional to the gas concentration.

2.1.5 Data Recorder. That portion of the measurement system that provides a permanent record of the analyzer(s) output. The data recorder may include automatic data reduction capabilities.

2.2 Span Value. The upper limit of a gas concentration measurement range that is specified for affected source categories in the applicable part of the regulations.

2.3 Calibration Gas. A known concentration of a gas in an appropriate diluent gas.

2.4 Calibration Error. The difference between the gas concentration indicated by the measurement system and the known concentration of the calibration gas.

2.5 Zero Drift. The difference in the measurement system output readings from zero after a stated period of operation during which no unscheduled maintenance, repair, or adjustment took place and the input concentration at the time of the measurements was zero.

2.6 Calibration Drift. The difference in the measurement system output readings from the known concentration of the calibration gas after a stated period of operation during which no unscheduled maintenance, repair, or adjustment took place and the input at the time of the measurements was a high-level value.

2.7 Response Time. The amount of time required for the measurement system to display on the data output 95 percent of a step change in pollutant concentration.

2.8 Interference Response. The output response of the measurement system to a component in the sample gas, other than the gas component being measured.

3. *Measurement System Performance Specifications*

3.1 NO_2 to NO Converter. Greater than 90 percent conversion efficiency of NO_2 to NO.

3.2 Interference Response. Less than ±2 percent of the span value.

3.3 Response Time. No greater than 30 seconds.

3.4 Zero Drift. Less than ±2 percent of the span value over the period of each test run.

3.5 Calibration Drift. Less than ±2 percent of the span value over the period of each test run.

4. *Apparatus and Reagents*

4.1 Measurement System. Use any measurement system for NO_x and diluent that is expected to meet the specifications in this method. A schematic of an acceptable measurement system is shown in Figure 20–1. The essential components of the measurement system are described below:

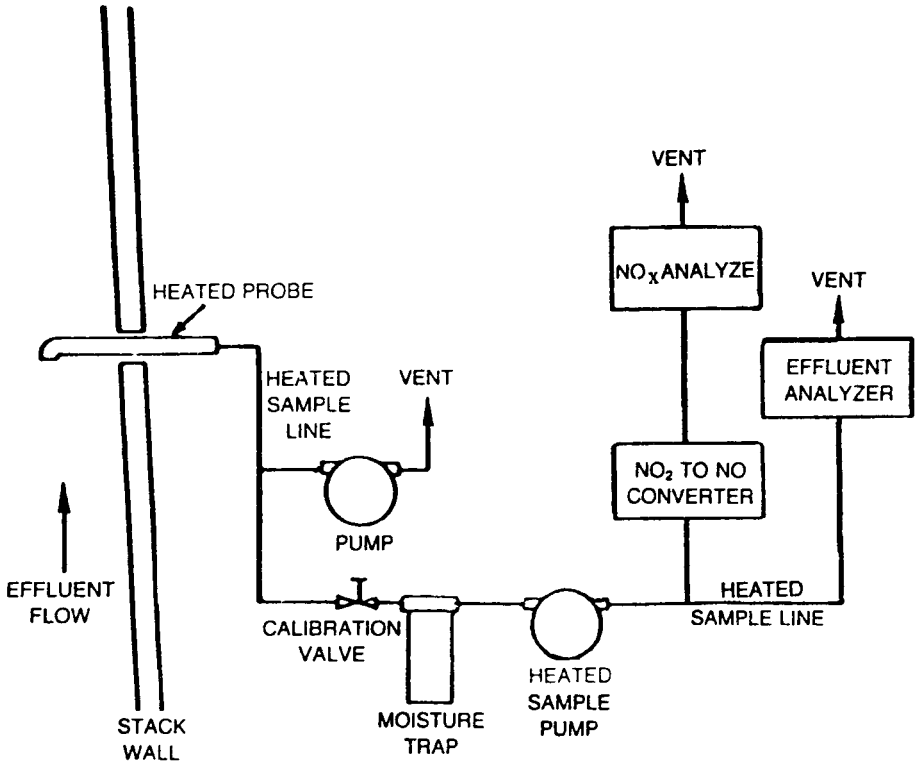

Figure 20.1. Measurement system design.

4.1.1 Sample Probe. Heated stainless steel, or equivalent, open-ended, straight tube of sufficient length to traverse the sample points.

4.1.2 Sample Line. Heated (>95 °C) stainless steel or Teflon tubing to transport the sample gas to the sample conditioners and analyzers.

4.1.3 Calibration Valve Assembly. A three-way valve assembly to direct the zero and calibration gases to the sample conditioners and to the analyzers. The calibration valve assembly shall be capable of blocking the sample gas flow and of introducing calibration gases to the measurement system when in the calibration mode.

4.1.4 NO_2 to NO Converter. That portion of the system that converts the nitrogen dioxide (NO_2) in the sample gas to nitrogen oxide (NO). Some analyzers are designed to measure NO_x as NO_2 on a wet basis and can be used without an NO_2 to NO converter or a moisture removal trap provided the sample line to the analyzer is heated (>95 °C) to the inlet of the analyzer. In addition, an NO_2 to NO converter is not necessary if the NO_2 portion of the exhaust gas is less than 5 percent of the total NO_x concentration. As a guideline, an NO_2 to NO converter is not necessary if the gas turbine is operated at 90 percent or more of peak load capacity. A converter is necessary under lower load conditions.

4.1.5 Moisture Removal Trap. A refrigerator-type condenser or other type device designed to continuously remove condensate from the sample gas while maintaining minimal contact between any condensate and the sample gas. The moisture removal trap is not necessary for analyzers that can measure NO_x concentrations on a wet basis; for these analyzers, (a) heat the sample line up to the inlet of the analyzers, (b) determine the moisture content using methods subject to the approval of the Administrator, and (c) correct the NO_x and diluent concentrations to a dry basis.

4.1.6 Particulate Filter. An in-stack or an out-of-stack glass fiber filter, of the type specified in EPA Method 5; however, an out-

of-stack filter is recommended when the stack gas temperature exceeds 250 to 300 °C.

4.1.7 Sample Pump. A nonreactive leak-free sample pump to pull the sample gas through the system at a flow rate sufficient to minimize transport delay. The pump shall be made from stainless steel or coated with Teflon or equivalent.

4.1.8 Sample Gas Manifold. A sample gas manifold to divert portions of the sample gas stream to the analyzers. The manifold may be constructed of glass, Teflon, stainless steel, or equivalent.

4.1.9 Diluent Gas Analyzer. An analyzer to determine the percent O_2 or CO_2 concentration of the sample gas.

4.1.10 Nitrogen Oxides Analyzer. An analyzer to determine the ppm NO_x concentration in the sample gas stream.

4.1.11 Data Recorder. A strip-chart recorder, analog computer, or digital recorder for recording measurement data.

4.2 Sulfur Dioxide Analysis. EPA Method 6 apparatus and reagents.

4.3 NO_x Calibration Gases. The calibration gases for the NO_x analyzer shall be NO in N_2. Use four calibration gas mixtures as specified below:

4.3.1 High-level Gas. A gas concentration that is equivalent to 80 to 90 percent of the span value.

4.3.2 Mid-level Gas. A gas concentration that is equivalent to 45 to 55 percent of the span value.

4.3.3 Low-level Gas. A gas concentration that is equivalent to 20 to 30 percent of the span value.

4.3.4 Zero Gas. A gas concentration of less than 0.25 percent of the span value. Ambient air may be used for the NO_x zero gas.

4.4 Diluent Calibration Gases.

4.4.1 For O_2 calibration gases, use purified air at 20.9 percent O_2 as the high-level O_2 gas. Use a gas concentration between 11 and 15 percent O_2 in nitrogen for the mid-level gas, and use purified nitrogen for the zero gas.

4.4.2 For CO_2 calibration gases, use a gas concentration between 8 and 12 percent CO_2 in air for the high-level calibration gas. Use a gas concentration between 2 and 5 percent CO_2 in air for the mid-level calibration gas, and use purified air (<100 ppm CO_2) as the zero level calibration gas.

5. *Measurement System Performance Test Procedures*

Perform the following procedures prior to measurement of emissions (Section 6) and only once for each test program, i.e., the series of all test runs for a given gas turbine engine.

5.1 Calibration Gas Checks. There are two alternatives for checking the concentrations of the calibration gases. (a) The first is to use calibration gases that are documented traceable to National Bureau of Standards Reference Materials. Use *Traceability Protocol for Establishing True Concentrations of Gases Used for Calibrations and Audits of Continuous Source Emission Monitors* (Protocol Number 1) that is available from the Environmental Monitoring Systems Laboratory, Quality Assurance Branch, Mail Drop 77, Environmental Protection Agency, Research Triangle Park, NC 27711. Obtain a certification from the gas manufacturer that the protocol was followed. These calibration gases are not to be analyzed with the Reference Methods. (b) The second alternative is to use calibration gases not prepared according to the protocol. If this alternative is chosen, within 1 month prior to the emission test, analyze each of the calibration gas mixtures in triplicate using Method 7 or the procedure outlined in Citation 1 for NO_x and use Method 3 for O_2 or CO_2. Record the results on a data sheet (example is shown in Figure 20–2). For the low-level, mid-level, or high-level gas mixtures, each of the individual NO_x analytical results must be within 10 percent (or 10 ppm, whichever is greater) of the triplicate set average (O_2 or CO_2 test results must be within 0.5 percent O_2 or CO_2); otherwise, discard the entire set and repeat the triplicate analyses. If the average of the triplicate reference method test results is within 5 percent for NO_x gas or 0.5 percent O_2 or CO_2 for the O_2 or CO_2 gas of the calibration gas manufacturer's tag value, use the tag value; otherwise, conduct at least three additional reference method test analyses until the results of six individual NO_x runs (the three original plus three additional) agree within 10 percent (or 10 ppm, whichever is greater) of the average (O_2 or CO_2 test results must be within 0.5 percent O_2 or CO_2). Then use this average for the cylinder value.

5.2 Measurement System Preparation. Prior to the emission test, assemble the measurement system following the manufacturer's written instructions in preparing and operating the NO_2 to NO converter, the NO_x analyzer, the diluent analyzer, and other components.

FIGURE 20–2—ANALYSIS OF CALIBRATION GASES

Date ———— (Must be within 1 month prior to the test period)

Reference method used

Sample run	Gas concentration, ppm		
	Low level[a]	Mid level[b]	High level[c]
1			
2			
3			
Average			
Maximum % deviation[d].			

[a] Average must be 20 to 30% of span value.

[b] Average must be 45 to 55% of span value.
[c] Average must be 80 to 90% of span value.
[d] Must be ≤±10% of applicable average or 10 ppm, whichever is greater.

5.3 Calibration Check. Conduct the calibration checks for both the NO_x and the diluent analyzers as follows:

5.3.1 After the measurement system has been prepared for use (Section 5.2), introduce zero gases and the mid-level calibration gases; set the analyzer output responses to the appropriate levels. Then introduce each of the remainder of the calibration gases described in Sections 4.3 or 4.4, one at a time, to the measurement system. Record the responses on a form similar to Figure 20–3.

5.3.2 If the linear curve determined from the zero and mid-level calibration gas responses does not predict the actual response of the low-level (not applicable for the diluent analyzer) and high-level gases within 2 percent of the span value, the calibration shall be considered invalid. Take corrective measures on the measurement system before proceeding with the test.

5.4 Interference Response. Introduce the gaseous components listed in Table 20–1 into the measurement system separately, or as gas mixtures. Determine the total interference output response of the system to these components in concentration units; record the values on a form similar to Figure 20–4. If the sum of the interference responses of the test gases for either the NO_x or diluent analyzers is greater than 2 percent of the applicable span value, take corrective measure on the measurement system.

FIGURE 20–3—ZERO AND CALIBRATION DATA

Turbine type ..... Identification number.
Date ..... Test number.
Analyzer type ..... Identification number.

	Cylinder value, ppm or %	Initial analyzer response, ppm or %	Final analyzer responses, ppm or %	Difference: initial-final, ppm or %
Zero gas.				
Low-level gas.				
Mid-level gas.				
High-level gas.				

$$\text{Percent drift} = \frac{\text{Absolute difference}}{\text{Span value}} \times 100$$

TABLE 20–1—INTERFERENCE TEST GAS CONCENTRATION

CO	500±50 ppm	CO_2	10±1 percent.
SO_2	200±20 ppm	O_2	20.9±1 percent.

FIGURE 20–4—INTERFERENCE RESPONSE

Date of test ————
Analyzer type
Serial No.

Test gas type	Concentration, ppm	Analyzer output response	% of span

$$\%\,\text{of span} = \frac{\text{Analyzer output response}}{\text{Instrument span}} \times 100$$

Conduct an interference response test of each analyzer prior to its initial use in the field. Thereafter, recheck the measurement system if changes are made in the instrumentation that could alter the interference response, e.g., changes in the type of gas detector.

In lieu of conducting the interference response test, instrument vendor data, which demonstrate that for the test gases of Table

20–1 the interference performance specification is not exceeded, are acceptable.

5.5 Response Time. To determine response time, first introduce zero gas into the system at the calibration valve until all readings are stable; then, switch to monitor the stack effluent until a stable reading can be obtained. Record the upscale response time. Next, introduce high-level calibration gas into the system. Once the system has stabilized at the high-level concentration, switch to monitor the stack effluent and wait until a stable value is reached. Record the downscale response time. Repeat the procedure three times. A stable value is equivalent to a change of less than 1 percent of span value for 30 seconds or less than 5 percent of the measured average concentration for 2 minutes. Record the response time data on a form similar to Figure 20–5, the readings of the upscale or downscale reponse time, and report the greater time as the ''response time'' for the analyzer. Conduct a response time test prior to the initial field use of the measurement system, and repeat if changes are made in the measurement system.

FIGURE 20–5—RESPONSE TIME

Date of test ————

Analyzer type

S/N

Span gas concentration: ———— ppm.
Analyzer span setting: ———— ppm.
Upscale:
1 ———— seconds.
2 ———— seconds.
3 ———— seconds.
Average upscale response —— seconds.

Downscale:
1 ———— seconds.
2 ———— seconds.
3 ———— seconds.
Average downscale response —— seconds.

System response time=
slower average time=
———— seconds.

5.6 NO_2 to NO Conversion Efficiency.

5.6.1 Add gas from the mid-level NO in N_2 calibration gas cylinder to a clean, evacuated, leak-tight Tedlar bag. Dilute this gas approximately 1:1 with 20.9 percent O_2, purified air. Immediately attach the bag outlet to the calibration valve assembly and begin operation of the sampling system. Operate the sampling system, recording the NO_x response, for at least 30 minutes. If the NO_2 to NO conversion is 100 percent, the instrument response will be stable at the highest peak value observed. If the response at the end of 30 minutes decreases more than 2.0 percent of the highest peak value, the system is not acceptable and corrections must be made before repeating the check.

5.6.2 Alternatively, the NO_2 to NO converter check described in Title 40, Part 86: Certification and Test Procedures for Heavy-duty Engines for 1979 and Later Model Years may be used. Other alternative procedures may be used with approval of the Administrator.

6. *Emission Measurement Test Procedure*

6.1 Preliminaries.

6.1.1 Selection of a Sampling Site. Select a sampling site as close as practical to the exhaust of the turbine. Turbine geometry, stack configuration, internal baffling, and point of introduction of dilution air will vary for different turbine designs. Thus, each of these factors must be given special consideration in order to obtain a representative sample. Whenever possible, the sampling site shall be located upstream of the point of introduction of dilution air into the duct. Sample ports may be located before or after the upturn elbow, in order to accommodate the configuration of the turning vanes and baffles and to permit a complete, unobstructed traverse of the stack. The sample ports shall not be located within 5 feet or 2 diameters (whichever is less) of the gas discharge to atmosphere. For supplementary-fired, combined-cycle plants, the sampling site shall be located between the gas turbine and the boiler. The diameter of the sample ports shall be sufficient to allow entry of the sample probe.

6.1.2 A preliminary O_2 or CO_2 traverse is made for the purpose of selecting sampling points of low O_2 or high CO_2 concentrations, as appropriate for the measurement system. Conduct this test at the turbine operating condition that is the lowest percentage of peak load operation included in the test program. Follow the procedure below, or use an alternative procedure subject to the approval of the Administrator.

6.1.2.1 Minimum Number of Points. Select a minimum number of points as follows: (1) Eight, for stacks having cross-sectional areas less than 1.5 m^2 (16.1 ft^2); (2) eight plus one additional sample point for each 0.2 m^2 (2.2 ft^2 of areas, for stacks of 1.5 m^2 to 10.0 m^2 (16.1–107.6 ft^2) in cross-sectional area; and (3) 49 sample points (48 for circular stacks) for stacks greater than 10.0 m^2 (107.6 ft^2) in cross-sectional area. Note that for circular ducts, the number of sample points must be a multiple of 4, and for rectangular ducts, the number of points must be one of those listed in Table 20–2; therefore, round off the number of points (upward), when appropriate.

6.1.2.2 Cross-sectional Layout and Location of Traverse Points. After the number of traverse points for the preliminary diluent sampling has been determined, use Method 1 to located the traverse points.

6.1.2.3 Preliminary Diluent Measurement. While the gas turbine is operating at the

lowest percent of peak load, conduct a preliminary diluent measurement as follows: Position the probe at the first traverse point and begin sampling. The minimum sampling time at each point shall be 1 minute plus the average system response time. Determine the average steady-state concentration of diluent at each point and record the data on Figure 20–6.

6.1.2.4 Selection of Emission Test Sampling Points. Select the eight sampling points at which the lowest O_2 concentrations or highest CO_2 concentrations were obtained. Sample at each of these selected points during each run at the different turbine load conditions. More than eight points may be used, if desired, providing that the points selected as described above are included.

TABLE 20–2—CROSS-SECTIONAL LAYOUT FOR RECTANGULAR STACKS

	Matrix layout
No. of traverse points:	
9	3 x 3
12	4 x 3
16	4 x 4
20	5 x 4
25	5 x 5
30	6 x 5
36	6 x 6
42	7 x 6
49	7 x 7

FIGURE 20–6—PRELIMINARY DILUENT TRAVERSE

Date _____

Location:
Plant _____
City, State _____

Turbine identification:
Manufacturer _____
Model, serial number _____

Sample point	Diluent concentration, ppm

6.2 NO_x and Diluent Measurement. This test is to be conducted at each of the specified load conditions. Three test runs at each load condition constitute a complete test.

6.2.1 At the beginning of each NO_x test run and, as applicable, during the run, record turbine data as indicated in Figure 20–7. Also, record the location and number of the traverse points on a diagram.

6.2.2 Position the probe at the first point determined in the preceding section and begin sampling. The minimum sampling time at each point shall be at least 1 minute plus the average system response time. Determine the average steady-state concentration of diluent and NO_x at each point and record the data on Figure 20–8.

FIGURE 20–7—STATIONARY GAS TURBINE DATA

TURBINE OPERATION RECORD

Test operator _____ Date _____

Turbine identification:
Type _____
Serial No. _____

Location:
Plant _____
City _____

Ambient temperature
Ambient humidity
Test time start
Test time finish
Fuel flow rate [a]
Water or steam flow rate [a]
Ambient pressure
Ultimate fuel analysis:
C _____
H _____
O _____
N _____
S _____
Ash _____
H_20 _____

Trace metals:
Na _____
Va _____
K _____
etc [b] _____

Operating load

[a] Describe measurement method, i.e., continuous flow meter, start finish volumes, etc.

[b] i.e., additional elements added for smoke suppression.

FIGURE 20–8—STATIONARY GAS TURBINE SAMPLE POINT RECORD

Turbine identification:
Manufacturer _____
Model, serial No. _____

Location:
Plant _____
City, State _____

Ambient temperature
Ambient pressure
Date _____
Test time: start
Test time: finish
Test operator name

Diluent instrument type
Serial No _____

NO_x instrument type
Serial No. _____

Sample point	Time, min	Diluent[a], %	NO_x a, ppm

[a]Average steady-state value from recorder or instrument readout.

6.2.3 After sampling the last point, conclude the test run by recording the final turbine operating parameters and by determining the zero and calibration drift, as follows:

Immediately following the test run at each load condition, or if adjustments are necessary for the measurement system during the tests, reintroduce the zero and mid-level calibration gases as described in Sections 4.3 and 4.4, one at a time, to the measurement system at the calibration valve assembly. (Make no adjustments to the measurement system until after the drift checks are made). Record the analyzers' responses on a form similar to Figure 20–3. If the drift values exceed the specified limits, the test run preceding the check is considered invalid and will be repeated following corrections to the measurement system. Alternatively, recalibrate the measurement system and recalculate the measurement data. Report the test results based on both the initial calibration and the recalibration data.

6.3 SO_2 Measurement. This test is conducted only at the 100 percent peak load condition. Determine SO_2 using Method 6, or equivalent, during the test. Select a minimum of six total points from those required for the NO_x measurements; use two points for each sample run. The sample time at each point shall be at least 10 minutes. Average the diluent readings taken during the NO_x test runs at sample points corresponding to the SO_2 traverse points (see Section 6.2.2) and use this average diluent concentration to correct the integrated SO_2 concentration obtained by Method 6 to 15 percent diluent (see Equation 20–1).

If the applicable regulation allows fuel sampling and analysis for fuel sulfur content to demonstrate compliance with sulfur emission unit, emission sampling with Method 6 is not required, provided the fuel sulfur content meets the limits of the regulation.

7. *Emission Calculations*

7.1 Moisture Correction. Measurement data used in most of these calculations must be on a dry basis. If measurements must be corrected to dry conditions, use the following equation:

$$C_d = \frac{C_w}{1 - B_{ws}} \qquad \text{Eq. 20-1}$$

where:

C_d=Pollutant or diluent concentration adjusted to dry conditions, ppm or percent.

C_w=Pollutant or diluent concentration measured under moist sample conditions, ppm or percent.

B_{ws}=Moisture content of sample gas as measured with Method 4, reference method, or other approved method, percent/100.

7.2 CO_2 Correction Factor. If pollutant concentrations are to be corrected to 15 percent O_2 and CO_2 concentration is measured in lieu of O_2 concentration measurement, a CO_2 correction factor is needed. Calculate the CO_2 correction factor as follows:

7.2.1 Calculate the fuel-specific F_0 value for the fuel burned during the test using values obtained from Method 19, Section 5.2, and the following equation.

$$F_o = \frac{0.209\ F_d}{F_c} \qquad \text{Eq. 20-2}$$

where:

F_O=Fuel factor based on the ratio of oxygen volume to the ultimate CO_2 volume produced by the fuel at zero percent excess air, dimensionless.

0.209=Fraction of air that is oxygen, percent/100.

F_d=Ratio of the volume of dry effluent gas to the gross calorific value of the fuel from Method 19, dsm^3/J ($dscf/10^6$ Btu).

F_c=Ratio of the volume of carbon dioxide produced to the gross calorific value of the fuel from Method 19, dsm^3/J ($dscf^6$ Btu).

7.2.2. Calculate the CO_2 correction factor for correcting measurement data to 15 percent oxygen, as follows:

$$X_{CO2} = \frac{5.9}{F_o} \qquad \text{Eq. 20-3}$$

where:

X_{CO2}=CO_2 Correction factor, percent.

5.9=20.9 percent O_2−15 percent O_2, the defined O_2 correction value, percent.

7.3 Correction of Pollutant Concentrations to 15 percent O_2. Calculate the NO_x and SO_2 gas concentrations adjusted to 15 percent O_2 using Equation 20–4 or 20–5, as appropriate. The correction to 15 percent O_2 is very sensitive to the accuracy of the O_2 or CO_2 concentration measurement. At the level of the analyzer drift specified in Section 3, the O_2 or CO_2 correction can exceed 5 percent at the concentration levels expected in gas turbine exhaust gases. Therefore, O_2

or CO_2 analyzer stability and careful calibration are necessary.

7.3.1 Correction of Pollutant Concentration Using O_2 Concentration. Calculate the O_2 corrected pollutant concentration, as follows:

$$C_{adj} = C_d \frac{5.9}{20.9 - \%O_2} \qquad \text{Eq. 20-4}$$

where:

C_{adj}=Pollutant concentration corrected to 15 percent O_2 ppm.

C_d=Pollutant concentration measured, dry basis, ppm.

$\%O_2$=Measured O_2 concentration dry basis, percent.

7.3.2 Correction of Pollutant Concentration Using CO_2 Concentration. Calculate the CO_2 corrected pollutant concentration, as follows:

$$C_{adj} = C_d \frac{X_{CO2}}{\%CO_2} \qquad \text{Eq. 20-5}$$

where:

$\%CO_2$=Measured CO_2 concentration measured, dry basis, percent.

7.4 Average Adjusted NO_x Concentration. Calculate the average adjusted NO_x concentration by summing the adjusted values for each sample point and dividing by the number of points for each run.

7.5 NO_x and SO_2 Emission Rate Calculations. The emission rates for NO_x and SO_2 in units of pollutant mass per quantity of heat input can be calculated using the pollutant and diluent concentrations and fuel-specific F-factors based on the fuel combustion characteristics. The measured concentrations of pollutant in units of parts per million by volume (ppm) must be converted to mass per unit volume concentration units for these calculations. Use the following table for such conversions:

CONVERSION FACTORS FOR CONCENTRATION

From	To	Multiply by
g/sm^3	ng/sm^3	10^9
mg/sm^3	ng/sm^3	10^6
lb/scf	ng/sm^3	1.602×10^{13}
ppm (SO_2)	ng/sm^3	2.660×10^6
ppm (NO_x)	ng/sm^3	1.912×10^6
ppm (SO_2)	lb/scf	1.660×10^{-7}
ppm (NO_x)	lb/scf	1.194×10^{-7}

7.5.1 Calculation of Emission Rate Using Oxygen Correction. Both the O_2 concentration and the pollutant concentration must be on a dry basis. Calculate the pollutant emission rate, as follows:

$$E = C_d F_d \frac{20.9}{20.9 - \%O_2} \qquad \text{Eq. 20-6}$$

where:

E=Mass emission rate of pollutant, ng/J (lb/10^6 Btu).

7.5.2 Calculation of Emission Rate Using Carbon Dioxide Correction. The CO_2 concentration and the pollutant concentration may be on either a dry basis or a wet basis, but both concentrations must be on the same basis for the calculations. Calculate the pollutant emission rate using Equation 20–7 or 20–8:

$$E = C_d F_c \frac{100}{\%CO_2} \qquad \text{Eq. 20-7}$$

$$E = C_w F_c \frac{100}{\%CO_{2w}} \qquad \text{Eq. 20-8}$$

where:

C_w=Pollutant concentration measured on a moist sample basis, ng/sm^3 (lb/scf).

$\%CO_{2w}$=Measured CO_2 concentration measured on a moist sample basis, percent.

8. *Bibliography*

1. Curtis, F. A Method for Analyzing NO_x Cylinder Gases-Specific Ion Electrode Procedure, Monograph available from Emission Measurement Laboratory, ESED, Research Triangle Park, NC 27711, October 1978.

2. Sigsby, John E., F. M. Black, T. A. Bellar, and D. L. Klosterman. Chemiluminescent Method for Analysis of Nitrogen Compounds in Mobile Source Emissions (NO, NO_2, and NH_3). ''Environmental Science and Technology,'' 7:51–54. January 1973.

3. Shigehara, R.T., R.M. Neulicht, and W.S. Smith. Validating Orsat Analysis Data from Fossil Fuel-Fired Units. Emission Measurement Branch, Emission Standards and Engineering Division, Office of Air Quality Planning and Standards, U.S. Environmental Protection Agency, Research Triangle Park, NC 27711. June 1975.

METHOD 21—DETERMINATION OF VOLATILE ORGANIC COMPOUNDS LEAKS

1. *Applicability and Principle*

1.1 Applicability. This method applies to the determination of volatile organic compound (VOC) leaks from process equipment. These sources include, but are not limited to, valves, flanges and other connections, pumps and compressors, pressure relief devices, process drains, open-ended valves, pump and compressor seal system degassing vents, accumulator vessel vents, agitator seals, and access door seals.

1.2 Principle. A portable instrument is used to detect VOC leaks from individual sources. The instrument detector type is not specified, but it must meet the specifications and performance criteria contained in Section 3. A leak definition concentration based on a reference compound is specified in each

applicable regulation. This procedure is intended to locate and classify leaks only, and is not to be used as a direct measure of mass emission rates from individual sources.

2. *Definitions*

2.1 Leak Definition Concentration. The local VOC concentration at the surface of a leak source that indicates that a VOC emission (leak) is present. The leak definition is an instrument meter reading based on a reference compound.

2.2 Reference Compound. The VOC species selected as an instrument calibration basis for specification of the leak definition concentration. (For example: If a leak definition concentration is 10,000 ppmv as methane, then any source emission that results in a local concentration that yields a meter reading of 10,000 on an instrument calibrated with methane would be classified as a leak. In this example, the leak definition is 10,000 ppmv, and the reference compound is methane.)

2.3 Calibration Gas. The VOC compound used to adjust the instrument meter reading to a known value. The calibration gas is usually the reference compound at a concentration approximately equal to the leak definition concentration.

2.4 No Detectable Emission. Any VOC concentration at a potential leak source (adjusted for local VOC ambient concentration) that is less than a value corresponding to the instrument readability specification of section 3.1.1(c) indicates that a leak is not present.

2.5 Response Factor. The ratio of the known concentration of a VOC compound to the observed meter reading when measured using an instrument calibrated with the reference compound specified in the application regulation.

2.6 Calibration Precision. The degree of agreement between measurements of the same known value, expressed as the relative percentage of the average difference between the meter readings and the known concentration to the known concentration.

2.7 Response Time. The time interval from a step change in VOC concentration at the input of the sampling system to the time at which 90 percent of the corresponding final value is reached as displayed on the instrument readout meter.

3. *Apparatus*

3.1 Monitoring Instrument.

3.1.1 Specifications.

a. The VOC instrument detector shall respond to the compounds being processed. Detector types which may meet this requirement include, but are not limited to, catalytic oxidation, flame ionization, infrared absorption, and photoionization.

b. Both the linear response range and the measurable range of the instrument for each of the VOC to be measured, and for the VOC calibration gas that is used for calibration, shall encompass the leak definition concentration specified in the regulation. A dilution probe assembly may be used to bring the VOC concentration within both ranges; however, the specifications for instrument response time and sample probe diameter shall still be met.

c. The scale of the instrument meter shall be readable to ±2.5 percent of the specified leak definition concentration when performing a no detectable emission survey.

d. The instrument shall be equipped with an electrically driven pump to insure that a sample is provided to the detector at a constant flow rate. The nominal sample flow rate, as measured at the sample probe tip, shall be 0.10 to 3.0 liters per minute when the probe is fitted with a glass wool plug or filter that may be used to prevent plugging of the instrument.

e. The instrument shall be intrinsically safe as defined by the applicable U.S.A. standards (e.g., National Electric Code by the National Fire Prevention Association) for operation in any explosive atmospheres that may be encountered in its use. The instrument shall, at a minimum, be intrinsically safe for Class 1, Division 1 conditions, and Class 2, Division 1 conditions, as defined by the example Code. The instrument shall not be operated with any safety device, such as an exhaust flame arrestor, removed.

f. The instrument shall be equipped with a probe or probe extension for sampling not to exceed ¼ in. in outside diameter, with a single end opening for admission of sample.

3.1.2 Performance Criteria.

(a) The instrument response factors for each of the VOC to be measured shall be less than 10. When no instrument is available that meets this specification when calibrated with the reference VOC specified in the applicable regulation, the available instrument may be calibrated with one of the VOC to be measured, or any other VOC, so long as the instrument then has a response factor of less than 10 for each of the VOC to be measured.

(b) The instrument response time shall be equal to or less than 30 seconds. The instrument pump, dilution probe (if any), sample probe, and probe filter, that will be used during testing, shall all be in place during the response time determination.

c. The calibration precision must be equal to or less than 10 percent of the calibration gas value.

d. The evaluation procedure for each parameter is given in Section 4.4.

3.1.3 Performance Evaluation Requirements.

a. A response factor must be determined for each compound that is to be measured, either by testing or from reference sources. The response factor tests are required before

placing the analyzer into service, but do not have to be repeated at subsequent intervals.

b. The calibration precision test must be completed prior to placing the analyzer into service, and at subsequent 3-month intervals or at the next use whichever is later.

c. The response time test is required prior to placing the instrument into service. If a modification to the sample pumping system or flow configuration is made that would change the response time, a new test is required prior to further use.

3.2 Calibration Gases. The monitoring instrument is calibrated in terms of parts per million by volume (ppmv) of the reference compound specified in the applicable regulation. The calibration gases required for monitoring and instrument performance evaluation are a zero gas (air, less than 10 ppmv VOC) and a calibration gas in air mixture approximately equal to the leak definition specified in the regulation. If cylinder calibration gas mixtures are used, they must be analyzed and certified by the manufacturer to be within ±2 percent accuracy, and a shelf life must be specified. Cylinder standards must be either reanalyzed or replaced at the end of the specified shelf life. Alternately, calibration gases may be prepared by the user according to any accepted gaseous standards preparation procedure that will yield a mixture accurate to within ±2 percent. Prepared standards must be replaced each day of use unless it can be demonstrated that degradation does not occur during storage.

Calibrations may be performed using a compound other than the reference compound if a conversion factor is determined for that alternative compound so that the resulting meter readings during source surveys can be converted to reference compound results.

4. *Procedures*

4.1 Pretest Preparations. Perform the instrument evaluation procedures given in Section 4.4 if the evaluation requirements of Section 3.1.3 have not been met.

4.2 Calibration Procedures. Assemble and start up the VOC analyzer according to the manufacturer's instructions. After the appropriate warmup period and zero internal calibration procedure, introduce the calibration gas into the instrument sample probe. Adjust the instrument meter readout to correspond to the calibration gas value.

NOTE: If the meter readout cannot be adjusted to the proper value, a malfunction of the analyzer is indicated and corrective actions are necessary before use.

4.3 Individual Source Surveys.

4.3.1 Type I—Leak Definition Based on Concentration. Place the probe inlet at the surface of the component interface where leakage could occur. Move the probe along the interface periphery while observing the instrument readout. If an increased meter reading is observed, slowly sample the interface where leakage is indicated until the maximum meter reading is obtained. Leave the probe inlet at this maximum reading location for approximately two times the instrument response time. If the maximum observed meter reading is greater than the leak definition in the applicable regulation, record and report the results as specified in the regulation reporting requirements. Examples of the application of this general technique to specific equipment types are:

a. Valves—The most common source of leaks from valves is at the seal between the stem and housing. Place the probe at the interface where the stem exits the packing gland and sample the stem circumference. Also, place the probe at the interface of the packing gland take-up flange seat and sample the periphery. In addition, survey valve housings of multipart assembly at the surface of all interfaces where a leak could occur.

b. Flanges and Other Connections—For welded flanges, place the probe at the outer edge of the flange-gasket interface and sample the circumference of the flange. Sample other types of nonpermanent joints (such as threaded connections) with a similar traverse.

c. Pumps and Compressors—Conduct a circumferential traverse at the outer surface of the pump or compressor shaft and seal interface. If the source is a rotating shaft, position the probe inlet within 1 cm of the shaft-seal interface for the survey. If the housing configuration prevents a complete traverse of the shaft periphery, sample all accessible portions. Sample all other joints on the pump or compressor housing where leakage could occur.

d. Pressure Relief Devices—The configuration of most pressure relief devices prevents sampling at the sealing seat interface. For those devices equipped with an enclosed extension, or horn, place the probe inlet at approximately the center of the exhaust area to the atmosphere.

e. Process Drains—For open drains, place the probe inlet at approximately the center of the area open to the atmosphere. For covered drains, place the probe at the surface of the cover interface and conduct a peripheral traverse.

f. Open-Ended Lines or Valves—Place the probe inlet at approximately the center of the opening to the atmosphere.

g. Seal System Degassing Vents and Accumulator Vents—Place the probe inlet at approximately the center of the opening to the atmosphere.

h. Access Door Seals—Place the probe inlet at the surface of the door seal interface and conduct a peripheral traverse.

4.3.2 Type II—''No Detectable Emission''.

Determine the local ambient concentration around the source by moving the probe inlet randomly upwind and downwind at a distance of one to two meters from the source. If an interference exists with this determination due to a nearby emission or leak, the local ambient concentration may be determined at distances closer to the source, but in no case shall the distance be less than 25 centimeters. Then move the probe inlet to the surface of the source and determine the concentration described in 4.3.1. The difference between these concentrations determines whether there are no detectable emissions. Record and report the results as specified by the regulation.

For those cases where the regulation requires a specific device installation, or that specified vents be ducted or piped to a control device, the existence of these conditions shall be visually confirmed. When the regulation also requires that no detectable emissions exist, visual observations and sampling surveys are required. Examples of this technique are:

(a) Pump or Compressor Seals—If applicable, determine the type of shaft seal. Preform a survey of the local area ambient VOC concentration and determine if detectable emissions exist as described above.

(b) Seal System Degassing Vents, Accumulator Vessel Vents, Pressure Relief Devices—If applicable, observe whether or not the applicable ducting or piping exists. Also, determine if any sources exist in the ducting or piping where emissions could occur prior to the control device. If the required ducting or piping exists and there are no sources where the emissions could be vented to the atmosphere prior to the control device, then it is presumed that no detectable emissions are present. If there are sources in the ducting or piping where emissions could be vented or sources where leaks could occur, the sampling surveys described in this paragraph shall be used to determine if detectable emissions exist.

4.3.3 Alternative Screening Procedure. A screening procedure based on the formation of bubbles in a soap solution that is sprayed on a potential leak source may be used for those sources that do not have continuously moving parts, that do not have surface temperatures greater than the boiling point or less than the freezing point of the soap solution, that do not have open areas to the atmosphere that the soap solution cannot bridge, or that do not exhibit evidence of liquid leakage. Sources that have these conditions present must be surveyed using the instrument techniques of 4.3.1 or 4.3.2.

Spray a soap solution over all potential leak sources. The soap solution may be a commercially available leak detection solution or may be prepared using concentrated detergent and water. A pressure sprayer or a squeeze bottle may be used to dispense the solution. Observe the potential leak sites to determine if any bubbles are formed. If no bubbles are observed, the source is presumed to have no detectable emissions or leaks as applicable. If any bubbles are observed, the instrument techniques of 4.3.1 or 4.3.2 shall be used to determine if a leak exists, or if the source has detectable emissions, as applicable.

4.4 Instrument Evaluation Procedures. At the beginning of the instrument performance evaluation test, assemble and start up the instrument according to the manufacturer's instructions for recommended warmup period and preliminary adjustments.

4.4.1 Response Factor. Calibrate the instrument with the reference compound as specified in the applicable regulation. For each organic species that is to be measured during individual source surveys, obtain or prepare a known standard in air at a concentration of approximately 80 percent of the applicable leak definition unless limited by volatility or explosivity. In these cases, prepare a standard at 90 percent of the saturation concentration, or 70 percent of the lower explosive limit, respectively. Introduce this mixture to the analyzer and record the observed meter reading. Introduce zero air until a stable reading is obtained. Make a total of three measurements by alternating between the known mixture and zero air. Calculate the response factor for each repetition and the average response factor.

Alternatively, if response factors have been published for the compounds of interest for the instrument or detector type, the response factor determination is not required, and existing results may be referenced. Examples of published response factors for flame ionization and catalytic oxidation detectors are included in Bibliography.

4.4.2 Calibration Precision. Make a total of three measurements by alternately using zero gas and the specified calibration gas. Record the meter readings. Calculate the average algebraic difference between the meter readings and the known value. Divide this average difference by the known calibration value and mutiply by 100 to express the resulting calibration precision as a percentage.

4.4.3 Response Time. Introduce zero gas into the instrument sample probe. When the meter reading has stabilized, switch quickly to the specified calibration gas. Measure the time from switching to when 90 percent of the final stable reading is attained. Perform this test sequence three times and record the results. Calculate the average response time.

5. *Bibliography*

1. DuBose, D.A., and G.E. Harris. Response Factors of VOC Analyzers at a Meter Reading of 10,000 ppmv for Selected Organic Compounds. U.S. Environmental Protection Agency, Research Triangle Park, NC. Publication No. EPA 600/2–81–051. September 1981.

2. Brown, G.E., et al. Response Factors of VOC Analyzers Calibrated with Methane for Selected Organic Compounds. U.S. Environmental Protection Agency, Research Triangle Park, NC. Publication No. EPA 600/2–81–022. May 1981.

3. DuBose, D.A., et al. Response of Portable VOC Analyzers to Chemical Mixtures. U.S. Environmental Protection Agency, Research Triangle Park, NC. Publication No. EPA 600/2–81–110. September 1981.

METHOD 22—VISUAL DETERMINATION OF FUGITIVE EMISSIONS FROM MATERIAL SOURCES AND SMOKE EMISSIONS FROM FLARES

1. *Introduction*

This method involves the visual determination of fugitive emissions, i.e., emissions not emitted directly from a process stack or duct. Fugitive emissions include emissions that (1) escape capture by process equipment exhaust hoods; (2) are emitted during material transfer; (3) are emitted from buildings housing material processing or handling equipment; and (4) are emitted directly from process equipment. This method is used also to determine visible smoke emissions from flares used for combustion of waste process materials.

This method determines the amount of time that any visible emissions occur during the observation period, i.e., the accumulated emission time. This method does not require that the opacity of emissions be determined. Since this procedure requires only the determination of whether a visible emission occurs and does not require the determination of opacity levels, observer certification according to the procedures of Method 9 are not required. However, it is necessary that the observer is educated on the general procedures for determining the presence of visible emissions. As a minimum, the observer must be trained and knowledgeable regarding the effects on the visibility of emissions caused by background contrast, ambient lighting, observer position relative to lighting, wind, and the presence of uncombined water (condensing water vapor). This training is to be obtained from written materials found in Citations 1 and 2 of Bibliography or from the lecture portion of the Method 9 certification course.

2. *Applicability and Principle*

2.1 Applicability. This method applies to the determination of the frequency of fugitive emissions from stationary sources (located indoors or outdoors) when specified as the test method for determining compliance with new source performance standards.

This method also is applicable for the determination of the frequency of visible smoke emissions from flares.

2.2 Principle. Fugitive emissions produced during material processing, handling, and transfer operations or smoke emissions from flares are visually determined by an observer without the aid of instruments.

3. *Definitions*

3.1 Emission Frequency. Percentage of time that emissions are visible during the observation period.

3.2 Emission Time. Accumulated amount of time that emissions are visible during the observation period.

3.3 Fugitive Emissions. Pollutant generated by an affected facility which is not collected by a capture system and is released to the atmosphere.

3.4 Smoke Emissions. Pollutant generated by combustion in a flare and occurring immediately downstream of the flame. Smoke occurring within the flame, but not downstream of the flame, is not considered a smoke emission.

3.5 Observation Period. Accumulated time period during which observations are conducted, not to be less than the period specified in the applicable regulation.

4. *Equipment*

4.1 Stopwatches. Accumulative type with unit divisions of at least 0.5 seconds; two required.

4.2 Light Meter. Light meter capable of measuring illuminance in the 50- to 200-lux range; required for indoor observations only.

5. *Procedure*

5.1 Position. Survey the affected facility or building or structure housing the process to be observed and determine the locations of potential emissions. If the affected facility is located inside a building, determine an observation location that is consistent with the requirements of the applicable regulation (i.e., outside observation of emissions escaping the building/structure or inside observation of emissions directly emitted from the affected facility process unit). Then select a position that enables a clear view of the potential emission point(s) of the affected facility or of the building or structure housing the affected facility, as appropriate for the applicable subpart. A position at least 15 feet, but not more than 0.25 miles, from the emission source is recommended. For outdoor locations, select a position where the sun is not directly in the observer's eyes.

5.2 Field Records.

5.2.1 Outdoor Location. Record the following information on the field data sheet (Figure 22–1): company name, industry, process unit, observer's name, observer's affiliation, and date. Record also the estimated wind speed, wind direction, and sky condition. Sketch the process unit being observed and note the observer location relative to the source and the sun. Indicate the potential and actual emission points on the sketch.

5.2.2 Indoor Location. Record the following information on the field data sheet (Figure 22–2): company name, industry, process unit, observer's name, observer's affiliation, and date. Record as appropriate the type, location, and intensity of lighting on the data sheet. Sketch the process unit being observed and note observer location relative to the source. Indicate the potential and actual fugitive emission points on the sketch.

5.3 Indoor Lighting Requirements. For indoor locations, use a light meter to measure the level of illumination at a location as close to the emission source(s) as is feasible. An illumination of greater than 100 lux (10 foot candles) is considered necessary for proper application of this method.

5.4 Observations. Record the clock time when observations begin. Use one stopwatch to monitor the duration of the observation period; start this stopwatch when the observation period begins. If the observation period is divided into two or more segments by process shutdowns or observer rest breaks, stop the stopwatch when a break begins and restart it without resetting when the break ends. Stop the stopwatch at the end of the observation period. The accumulated time indicated by this stopwatch is the duration of the observation period. When the observation period is completed, record the clock time.

During the observation period, continously watch the emission source. Upon observing an emission (condensed water vapor is not considered an emission), start the second accumulative stopwatch; stop the watch when the emission stops. Continue this procedure for the entire observation period. The accumulated elapsed time on this stopwatch is the total time emissions were visible during the observation period, i.e., the emission time.

5.4.1 Observation Period. Choose an observation period of sufficient length to meet the requirements for determining compliance with the emission regulation in the applicable subpart. When the length of the observation period is specifically stated in the applicable subpart, it may not be necessary to observe the source for this entire period if the emission time required to indicate noncompliance (based on the specified observation period) is observed in a shorter time period. In other words, if the regulation prohibits emissions for more than 6 minutes in any hour, then observations may (optional) be stopped after an emission time of 6 minutes is exceeded. Similarly, when the regulation is expressed as an emission frequency and the regulation prohibits emissions for greater than 10 percent of the time in any hour, then observations may (optional) be terminated after 6 minutes of emissions are observed since 6 minutes is 10 percent of an hour. In any case, the observation period shall not be less than 6 minutes in duration. In some cases, the process operation may be intermittent or cyclic. In such cases, it may be convenient for the observation period to coincide with the length of the process cycle.

5.4.2 Observer Rest Breaks. Do not observe emissions continuously for a period of more than 15 to 20 minutes without taking a rest break. For sources requiring observation periods of greater than 20 minutes, the observer shall take a break of not less than 5 minutes and not more than 10 minutes after every 15 to 20 minutes of observation. If continuous observations are desired for extended time periods, two observers can alternate between making observations and taking breaks.

5.4.3 Visual Interference. Occasionally, fugitive emissions from sources other than the affected facility (e.g., road dust) may prevent a clear view of the affected facility. This may particularly be a problem during periods of high wind. If the view of the potential emission points is obscured to such a degree that the observer questions the validity of continuing observations, then the observations are terminated, and the observer clearly notes this fact on the data form.

5.5 Recording Observations. Record the accumulated time of the observation period on the data sheet as the observation period duration. Record the accumulated time emissions were observed on the data sheet as the emission time. Record the clock time the observation period began and ended, as well as the clock time any observer breaks began and ended.

6. *Calculations*

If the applicable subpart requires that the emission rate be expressed as an emission frequency (in percent), determine this value as follows: Divide the accumulated emission time (in seconds) by the duration of the observation period (in seconds) or by any minimum observation period required in the applicable subpart, if the acutal observation period is less than the required period and multiply this quotient by 100.

7. *Bibliography*

1. Missan, Robert and Arnold Stein. Guidelines for Evaluation of Visible Emissions Certification, Field Procedures, Legal Aspects, and Background Material. EPA Publication No. EPA–340/1–75–007. April 1975

2. Wohlschlegel, P. and D. E. Wagoner. Guideline for Development of a Quality Assurance Program: Volume IX—Visual Determination of Opacity Emissions From Stationary Sources. EPA Publication No. EPA–650/4–74–005–i. November 1975.

FUGITIVE OR SMOKE EMISSION INSPECTION
OUTDOOR LOCATION

Company _____	Observer _____
Location _____	Affiliation _____
Company representative _____	Date _____
Sky Conditions _____	Wind direction _____
Precipitation _____	Wind speed _____
Industry _____	Process unit _____

Sketch process unit; indicate observer position relative to source and sun; indicate potential emission points and/or actual emission points.

OBSERVATIONS	Clock time	Observation period duration, min:sec	Accumulated emission time, min:sec
Begin Observation			
End observation			

Figure 22-1

Fugitive Emission Inspection Indoor Location Table

FUGITIVE EMISSION INSPECTION
INDOOR LOCATION

Company _____ Observer _____

Location _____ Affiliation _____

Company Representative _____ Date _____

Industry _____ Process unit _____

Light type (fluorescent, incandescent, natural _____

Light location (overhead, behind observer, etc.) _____

Illuminance (lux or footcandles) _____

Sketch process unit; indicate observer position relative to source; indicate potential emission points and/or actual emission points.

OBSERVATIONS	Clock time	Observation period duration, min:sec	Accumulated emission, time, min:sec
Beginning observation			
End observation			

Figure 22–2

METHOD 23—DETERMINATION OF POLYCHLORINATED DIBENZO-P-DIOXINS AND POLYCHLORINATED DIBENZOFURANS FROM STATIONARY SOURCES

1. Applicability and Principle

1.1 Applicability. This method is applicable to the determination of polychlorinated dibenzo-p-dioxins (PCDD's) and polychlorinated dibenzofurans (PCDF's) from stationary sources.

1.2 Principle. A sample is withdrawn from the gas stream isokinetically and collected in the sample probe, on a glass fiber filter, and on a packed column of adsorbent material. The sample cannot be separated into a particle vapor fraction. The PCDD's and PCDF's are extracted from the sample, separated by high resolution gas chromatography, and measured by high resolution mass spectrometry.

2. Apparatus

2.1 Sampling. A schematic of the sampling train used in this method is shown in Figure 23–1. Sealing greases may not be used

in assembling the train. The train is identical to that described in section 2.1 of Method 5 of this appendix with the following additions:

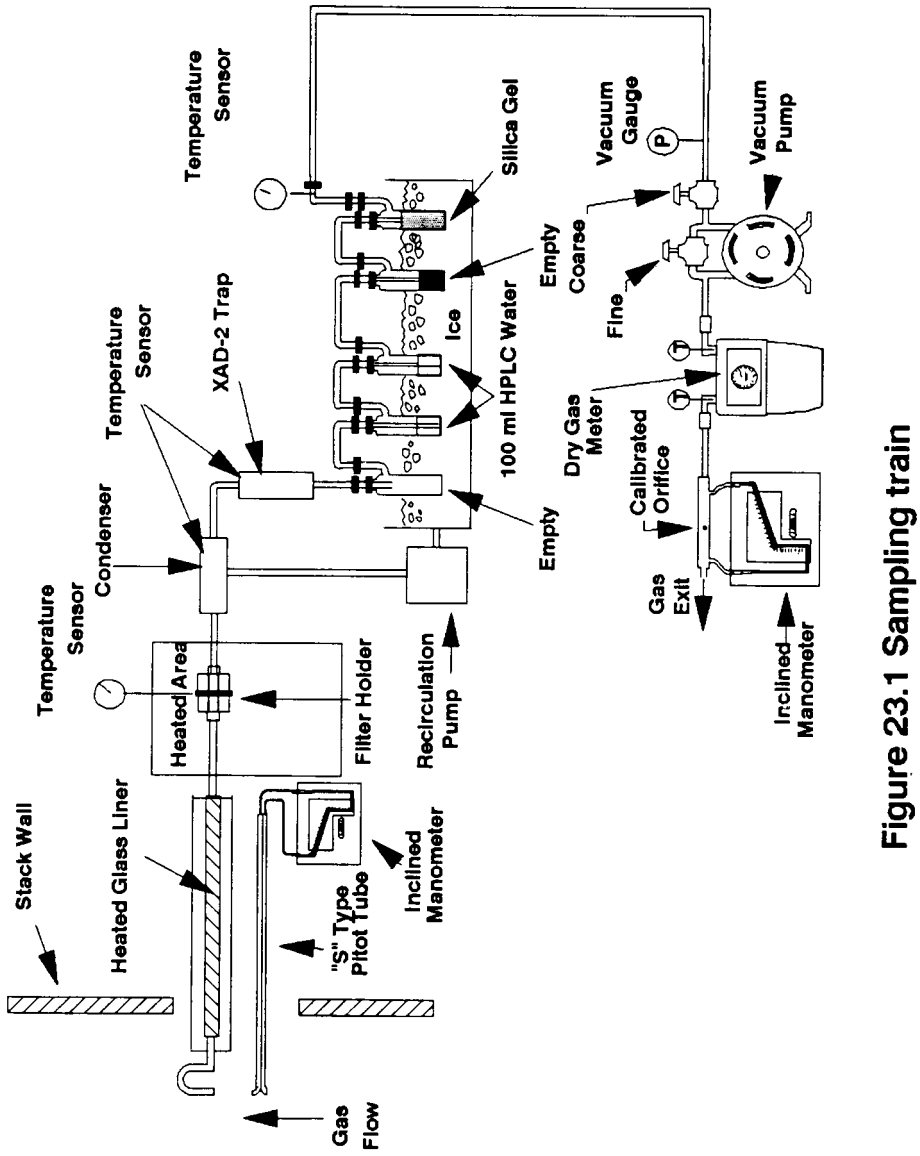

Figure 23.1 Sampling train

2.1.1 Nozzle. The nozzle shall be made of nickel, nickel-plated stainless steel, quartz, or borosilicate glass.

2.1.2 Sample Transfer Lines. The sample transfer lines, if needed, shall be heat traced, heavy walled TFE (½ in. OD with ⅛ in. wall) with connecting fittings that are capable of

forming leak-free, vacuum-tight connections without using sealing greases. The line shall be as short as possible and must be maintained at 120 °C.

2.1.1 Filter Support. Teflon or Teflon-coated wire.

2.1.2 Condenser. Glass, coil type with compatible fittings. A schematic diagram is shown in Figure 23–2.

2.1.3 Water Bath. Thermostatically controlled to maintain the gas temperature exiting the condenser at <20 °C (68 °F).

2.1.4 Adsorbent Module. Glass container to hold the solid adsorbent. A shematic diagram is shown in Figure 23–2. Other physical configurations of the resin trap/condenser assembly are acceptable. The connecting fittings shall form leak-free, vacuum tight seals. No sealant greases shall be used in the sampling train. A coarse glass frit is included to retain the adsorbent.

2.2 Sample Recovery.

2.2.1 Fitting Caps. Ground glass, Teflon tape, or aluminum foil (Section 2.2.6) to cap off the sample exposed sections of the train.

2.2.2 Wash Bottles. Teflon, 500-ml.

2.2.3 Probe-Liner Probe-Nozzle, and Filter-Holder Brushes. Inert bristle brushes with precleaned stainless steel or Teflon handles. The probe brush shall have extensions of stainless steel or Teflon, at least as long as the probe. The brushes shall be properly sized and shaped to brush out the nozzle, probe liner, and transfer line, if used.

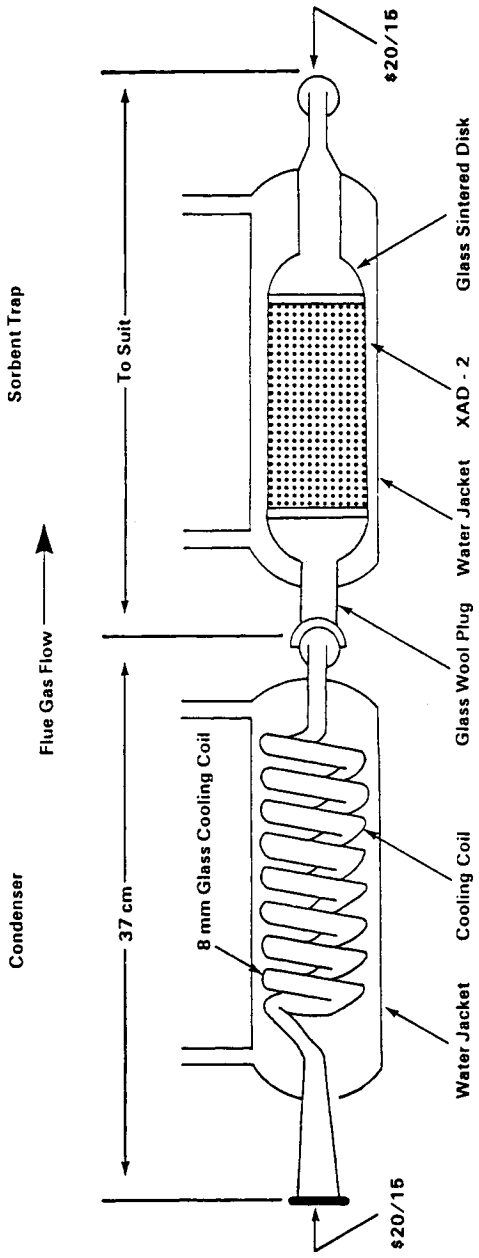

Figure 23.2. Condenser and adsorbent trap

2.2.4 Filter Storage Container. Sealed filter holder, wide-mouth amber glass jar with Teflon-lined cap, or glass petri dish.

2.2.5 Balance. Triple beam.

2.2.6 Aluminum Foil. Heavy duty, hexane-rinsed.

2.2.7 Metal Storage Container. Air tight container to store silica gel.

2.2.8 Graduated Cylinder. Glass, 250-ml with 2-ml graduation.

2.2.9 Glass Sample Storage Container. Amber glass bottle for sample glassware washes, 500- or 1000-ml, with leak free Teflon-lined caps.

2.3 Analysis.

2.3.1 Sample Container. 125- and 250-ml flint glass bottles with Teflon-lined caps.

2.3.2 Test Tube. Glass.

2.3.3 Soxhlet Extraction Apparatus. Capable of holding 43 x 123 mm extraction thimbles.

2.3.4 Extraction Thimble. Glass, precleaned cellulosic, or glass fiber.

2.3.5 Pasteur Pipettes. For preparing liquid chromatographic columns.

2.3.6 Reacti-vials. Amber glass, 2-ml, silanized prior to use.

2.3.7 Rotary Evaporator. Buchi/Brinkman RF–121 or equivalent.

2.3.8 Nitrogen Evaporative Concentrator. N-Evap Analytical Evaporator Model III or equivalent.

2.3.9 Separatory Funnels. Glass, 2-liter.

2.3.10 Gas Chromatograph. Consisting of the following components:

2.3.10.1 Oven. Capable of maintaining the separation column at the proper operating temperature ± °C and performing programmed increases in temperature at rates of at least 40 °C/min.

2.3.10.2 Temperature Gauge. To monitor column oven, detector, and exhaust temperatures ±1 °C.

2.3.10.3 Flow System. Gas metering system to measure sample, fuel, combustion gas, and carrier gas flows.

2.3.10.4 Capillary Columns. A fused silica column, 60 × 0.25 mm inside diameter (ID), coated with DB–5 and a fused silica column, 30 m × 0.25 mm ID coated with DB–225. Other column systems may be used provided that the user is able to demonstrate using calibration and performance checks that the column system is able to meet the specifications of section 6.1.2.2.

2.3.11 Mass Spectrometer. Capable of routine operation at a resolution of 1:10000 with a stability of ±5 ppm.

2.3.12 Data System. Compatible with the mass spectrometer and capable of monitoring at least five groups of 25 ions.

2.3.13 Analytical Balance. To measure within 0.1 mg.

3. Reagents

3.1 Sampling.

3.1.1 Filters. Glass fiber filters, without organic binder, exhibiting at least 99.95 percent efficiency (<0.05 percent penetration) on 0.3-micron dioctyl phthalate smoke particles. The filter efficiency test shall be conducted in accordance with ASTM Standard Method D 2986–71 (Reapproved 1978) (incorporated by reference—see §60.17).

3.1.1.1 Precleaning. All filters shall be cleaned before their initial use. Place a glass extraction thimble and 1 g of silica gel and a plug of glass wool into a Soxhlet apparatus, charge the apparatus with toluene, and reflux for a minimum of 3 hours. Remove the toluene and discard it, but retain the silica gel. Place no more than 50 filters in the thimble onto the silica gel bed and top with the cleaned glass wool. Charge the Soxhlet with toluene and reflux for 16 hours. After extraction, allow the Soxhlet to cool, remove the filters, and dry them under a clean N_2 stream. Store the filters in a glass petri dish sealed with Teflon tape.

3.1.2 Adsorbent Resin. Amberlite XAD–2 resin. Thoroughly cleaned before initial use.

3.1.2.1 Cleaning Procedure. This procedure may be carried out in a giant Soxhlet extractor. An all-glass filter thimble containing an extra-course frit is used for extraction of XAD–2. The frit is recessed 10–15 mm above a crenelated ring at the bottom of the thimble to facilitate drainage. The resin must be carefully retained in the extractor cup with a glass wool plug and a stainless steel ring because it floats on methylene chloride. This process involves sequential extraction in the following order.

Solvent	Procedure
Water	Initial rinse: Place resin in a beaker, rinse once with water, and discard. Fill with water a second time, let stand overnight, and discard.
Water	Extract with water for 8 hours.
Methanol	Extract for 22 hours.
Methylene Chloride	Extract for 22 hours.
Toluene	Extract for 22 hours.

3.1.2.2 Drying.

3.1.2.2.1 Drying Column. Pyrex pipe, 10.2 cm ID by 0.6 m long, with suitable retainers.

3.1.2.2.2 Procedure. The adsorbent must be dried with clean inert gas. Liquid nitrogen from a standard commercial liquid nitrogen cylinder has proven to be a reliable source of large volumes of gas free from organic contaminants. Connect the liquid nitrogen cylinder to the column by a length of cleaned copper tubing, 0.95 cm ID, coiled to pass through a heat source. A convenient heat source is a water-bath heated from a steam line. The final nitrogen temperature should only be warm to the touch and not over 40 °C. Continue flowing nitrogen through the adsorbent until all the residual solvent is removed. The flow rate should be sufficient to gently agitate the particles but not so excessive as the cause the particles to fracture.

3.1.2.3 Quality Control Check. The adsorbent must be checked for residual toluene.

3.1.2.3.1 Extraction. Weigh 1.0 g sample of dried resin into a small vial, add 3 ml of toluene, cap the vial, and shake it well.

3.1.2.3.2 Analysis. Inject a 2 µl sample of the extract into a gas chromatograph operated under the following conditions:

Column: 6 ft × ⅛ in stainless steel containing 10 percent OV–101 on 100/120 Supelcoport.
Carrier Gas: Helium at a rate of 30 ml/min.
Detector: Flame ionization detector operated at a sensitivity of 4×10^{-11} A/mV.
Injection Port Temperature: 250 °C.
Detector Temperature: 305 °C.
Oven Temperature: 30 °C for 4 min; programmed to rise at 40 °C/min until it reaches 250 °C; return to 30 °C after 17 minutes.

Compare the results of the analysis to the results from the reference solution. Prepare the reference solution by injection 2.5 µl of methylene chloride into 100 ml of toluene. This corresponds to 100 µg of methylene chloride per g of adsorbent. The maximum acceptable concentration is 1000 µg/g of adsorbent. If the adsorbent exceeds this level, drying must be continued until the excess methylene chloride is removed.

3.1.2.4 Storage. The adsorbent must be used within 4 weeks of cleaning. After cleaning, it may be stored in a wide mouth amber glass container with a Teflon-lined cap or placed in one of the glass adsorbent modules tightly sealed with glass stoppers. If precleaned adsorbent is purchased in sealed containers, it must be used within 4 weeks after the seal is broken.

3.1.3 Glass Wool. Cleaned by sequential immersion in three aliquots of methylene chloride, dried in a 110 °C oven, and stored in a methylene chloride-washed glass jar with a Teflon-lined screw cap.

3.1.4 Water. Deionized distilled and stored in a methylene chloride-rinsed glass container with a Teflon-lined screw cap.

3.1.5 Silica Gel. Indicating type, 6 to 16 mesh. If previously used, dry at 175 °C (350 °F) for two hours. New silica gel may be used as received. Alternately other types of desiccants (equivalent or better) may be used, subject to the approval of the Administrator.

3.1.6 Chromic Acid Cleaning Solution. Dissolve 20 g of sodium dichromate in 15 ml of water, and then carefully add 400 ml of concentrated sulfuric acid.

3.2 Sample Recovery.

3.2.2 Acetone. Pesticide quality.

3.2.2 Methylene Chloride. Pesticide qualtity.

3.2.3 Toluene. Pesticide quality.

3.3 Analysis.

3.3.1 Potassium Hydroxide. ACS grade, 2-percent (weight/volume) in water.

3.3.2 Sodium Sulfate. Granulated, reagent grade. Purify prior to use by rinsing with methylene chloride and oven drying. Store the cleaned material in a glass container with a Teflon-lined screw cap.

3.3.3 Sulfuric Acid. Reagent grade.

3.3.4 Sodium Hydroxide. 1.0 N. Weigh 40 g of sodium hydroxide into a 1-liter volumetric flask. Dilute to 1 liter with water.

3.3.5 Hexane. Pesticide grade.

3.3.6 Methylene Chloride. Pesticide grade.

3.3.7 Benzene. Pesticide Grade.

3.3.8 Ethyl Acetate.

3.3.9 Methanol. Pesticide Grade.

3.3.10 Toluene. Pesticide Grade.

3.3.11 Nonane. Pesticide Grade.

3.3.12 Cyclohexane. Pesticide Grade.

3.3.13 Basic Alumina. Activity grade 1, 100–200 mesh. Prior to use, activate the alumina by heating for 16 hours at 130 °C before use. Store in a desiccator. Pre-activated alumina may be purchased from a supplier and may be used as received.

3.3.14 Silica Gel. Bio-Sil A, 100–200 mesh. Prior to use, activate the silica gel by heating for at least 30 minutes at 180 °C. After cooling, rinse the silica gel sequentially with methanol and methylene chloride. Heat the rinsed silica gel at 50 °C for 10 minutes, then increase the temperature gradually to 180 °C over 25 minutes and maintain it at this temperature for 90 minutes. Cool at room temperature and store in a glass container with a Teflon-lined screw cap.

3.3.15 Silica Gel Impregnated with Sulfuric Acid. Combine 100 g of silica gel with 44 g of concentrated sulfuric acid in a screw capped glass bottle and agitate thoroughly. Disperse the solids with a stirring rod until a uniform mixture is obtained. Store the mixture in a glass container with a Teflon-lined screw cap.

3.3.16 Silica Gel Impregnated with Sodium Hydroxide. Combine 39 g of 1 N sodium hydroxide with 100 g of silica gel in a screw capped glass bottle and agitate thoroughly. Disperse solids with a stirring rod until a uniform mixture is obtained. Store the mixture in glass container with a Teflon-lined screw cap.

3.3.17 Carbon/Celite. Combine 10.7 g of AX–21 carbon with 124 g of Celite 545 in a 250-ml glass bottle with a Teflon-lined screw cap. Agitate the mixture thoroughly until a uniform mixture is obtained. Store in the glass container.

3.3.18 Nitrogen. Ultra high purity.

3.3.19 Hydrogen. Ultra high purity.

3.3.20 Internal Standard Solution. Prepare a stock standard solution containing the isotopically labelled PCDD's and PCDF's at the concentrations shown in Table 1 under the heading ''Internal Standards'' in 10 ml of nonane.

3.3.21 Surrogate Standard Solution. Prepare a stock standard solution containing the isotopically labelled PCDD's and PCDF's at the concentrations shown in Table 1 under the heading ''Surrogate Standards'' in 10 ml of nonane.

3.3.22 Recovery Standard Solution. Prepare a stock standard solution containing the isotopically labelled PCDD's and PCDF's

at the concentrations shown in Table 1 under the heading ''Recovery Standards'' in 10 ml of nonane.

4. Procedure

4.1 Sampling. The complexity of this method is such that, in order to obtain reliable results, testers should be trained and experienced with the test procedures.

4.1.1 Pretest Preparation.

4.1.1.1 Cleaning Glassware. All glass components of the train upstream of and including the adsorbent module, shall be cleaned as described in section 3A of the ''Manual of Analytical Methods for the Analysis of Pesticides in Human and Environmental Samples.'' Special care shall be devoted to the removal of residual silicone grease sealants on ground glass connections of used glassware. Any residue shall be removed by soaking the glassware for several hours in a chromic acid cleaning solution prior to cleaning as described above.

4.1.1.2 Adsorbent Trap. The traps must be loaded in a clean area to avoid contamination. They may not be loaded in the field. Fill a trap with 20 to 40 g of XAD–2. Follow the XAD–2 with glass wool and tightly cap both ends of the trap. Add 100 µl of the surrogate standard solution (section 3.3.21) to each trap.

4.1.1.3 Sample Train. It is suggested that all components be maintained according to the procedure described in APTD–0576.

4.1.1.4 Silica Gel. Weigh several 200 to 300 g portions of silica gel in an air tight container to the nearest 0.5 g. Record the total weight of the silica gel plus container, on each container. As an alternative, the silica gel may be weighed directly in its impinger or sampling holder just prior to sampling.

4.1.1.5 Filter. Check each filter against light for irregularities and flaws or pinhole leaks. Pack the filters flat in a clean glass container.

4.1.2 Preliminary Determinations. Same as section 4.1.2 of Method 5.

4.1.3 Preparation of Collection Train.

4.1.3.1 During preparation and assembly of the sampling train, keep all train openings where contamination can enter, sealed until just prior to assembly or until sampling is about to begin.

NOTE: Do not use sealant grease in assembling the train.

4.1.3.2 Place approximately 100 ml of water in the second and third impingers, leave the first and fourth impingers empty, and transfer approximately 200 to 300 g of preweighed silica gel from its container to the fifth impinger.

4.1.3.3 Place the silica gel container in a clean place for later use in the sample recovery. Alternatively, the weight of the silica gel plus impinger may be determined to the nearest 0.5 g and recorded.

4.1.3.4 Assemble the train as shown in Figure 23–1.

4.1.3.5 Turn on the adsorbent module and condenser coil recirculating pump and begin monitoring the adsorbent module gas entry temperature. Ensure proper sorbent temperature gas entry temperature before proceeding and before sampling is initiated. It is extremely important that the XAD–2 adsorbent resin temperature never exceed 50 °C because thermal decomposition will occur. During testing, the XAD–2 temperature must not exceed 20 °C for efficient capture of the PCDD's and PCDF's.

4.1.4 Leak-Check Procedure. Same as Method 5, section 4.1.4.

4.1.5 Sample Train Operation. Same as Method 5, section 4.1.5.

4.2 Sample Recovery. Proper cleanup procedure begins as soon as the probe is removed from the stack at the end of the sampling period. Seal the nozzle end of the sampling probe with Teflon tape or aluminum foil.

When the probe can be safely handled, wipe off all external particulate matter near the tip of the probe. Remove the probe from the train and close off both ends with aluminum foil. Seal off the inlet to the train with Teflon tape, a ground glass cap, or aluminum foil.

Transfer the probe and impinger assembly to the cleanup area. This area shall be clean and enclosed so that the chances of losing or contaminating the sample are minimized. Smoking, which could contaminate the sample, shall not be allowed in the cleanup area.

Inspect the train prior to and during disassembly and note any abnormal conditions, e.g., broken filters, colored impinger liquid, etc. Treat the samples as follows:

4.2.1 Container No. 1. Either seal the filter holder or carefully remove the filter from the filter holder and place it in its identified container. Use a pair of cleaned tweezers to handle the filter. If it is necessary to fold the filter, do so such that the particulate cake is inside the fold. Carefully transfer to the container any particulate matter and filter fibers which adhere to the filter holder gasket, by using a dry inert bristle brush and a sharp-edged blade. Seal the container.

4.2.2 Adsorbent Module. Remove the module from the train, tightly cap both ends, label it, cover with aluminum foil, and store it on ice for transport to the laboratory.

4.2.3 Container No. 2. Quantitatively recover material deposited in the nozzle, probe transfer lines, the front half of the filter holder, and the cyclone, if used, first, by brushing while rinsing three times each with acetone and then, by rinsing the probe three times with methylene chloride. Collect all the rinses in Container No. 2.

Rinse the back half of the filter holder three times with acetone. Rinse the connecting line between the filter and the condenser three times with acetone. Soak the connecting line with three separate portions of methylene chloride for 5 minutes each. If using a separate condenser and adsorbent trap, rinse the condenser in the same manner as the connecting line. Collect all the rinses in Container No. 2 and mark the level of the liquid on the container.

4.2.4 Container No. 3. Repeat the methylene chloride-rinsing described in Section 4.2.3 using toluene as the rinse solvent. Collect the rinses in Container No. 3 and mark the level of the liquid on the container.

4.2.5 Impinger Water. Measure the liquid in the first three impingers to within ±1 ml by using a graduated cylinder or by weighing it to within ±0.5 g by using a balance. Record the volume or weight of liquid present. This information is required to calculate the moisture content of the effluent gas.

Discard the liquid after measuring and recording the volume or weight.

4.2.7 Silica Gel. Note the color of the indicating silica gel to determine if it has been completely spent and make a mention of its condition. Transfer the silica gel from the fifth impinger to its original container and seal.

5. Analysis

All glassware shall be cleaned as described in section 3A of the ''Manual of Analytical Methods for the Analysis of Pesticides in Human and Environmental Samples.'' All samples must be extracted within 30 days of collection and analyzed within 45 days of extraction.

5.1 Sample Extraction.

5.1.1 Extraction System. Place an extraction thimble (section 2.3.4), 1 g of silica gel, and a plug of glass wool into the Soxhlet apparatus, charge the apparatus with toluene, and reflux for a minimum of 3 hours. Remove the toluene and discard it, but retain the silica gel. Remove the extraction thimble from the extraction system and place it in a glass beaker to catch the solvent rinses.

5.1.2 Container No. 1 (Filter). Transfer the contents directly to the glass thimble of the extraction system and extract them simultaneously with the XAD–2 resin.

5.1.3 Adsorbent Cartridge. Suspend the adsorbent module directly over the extraction thimble in the beaker (See section 5.1.1). The glass frit of the module should be in the up position. Using a Teflon squeeze bottle containing toluene, flush the XAD–2 into the thimble onto the bed of cleaned silica gel. Thoroughly rinse the glass module catching the rinsings in the beaker containing the thimble. If the resin is wet, effective extraction can be accomplished by loosely packing the resin in the thimble. Add the XAD–2 glass wool plug into the thimble.

5.1.4 Container No. 2 (Acetone and Methylene Chloride). Concentrate the sample to a volume of about 1–5 ml using the rotary evaporator apparatus, at a temperature of less than 37 °C. Rinse the sample container three times with small portions of methylene chloride and add these to the concentrated solution and concentrate further to near dryness. This residue contains particulate matter removed in the rinse of the train probe and nozzle. Add the concentrate to the filter and the XAD–2 resin in the Soxhlet apparatus described in section 5.1.1.

5.1.5 Extraction. Add 100 µl of the internal standard solution (Section 3.3.20) to the extraction thimble containing the contents of the adsorbent cartridge, the contents of Container No. 1, and the concentrate from section 5.1.4. Cover the contents of the extraction thimble with the cleaned glass wool plug to prevent the XAD–2 resin from floating into the solvent reservoir of the extractor. Place the thimble in the extractor, and add the toluene contained in the beaker to the solvent reservoir. Pour additional toluene to fill the reservoir approximately 2/3 full. Add Teflon boiling chips and assemble the apparatus. Adjust the heat source to cause the extractor to cycle three times per hour. Extract the sample for 16 hours. After extraction, allow the Soxhlet to cool. Transfer the toluene extract and three 10-ml rinses to the rotary evaporator. Concentrate the extract to approximately 10 ml. At this point the analyst may choose to split the sample in half. If so, split the sample, store one half for future use, and analyze the other according to the procedures in sections 5.2 and 5.3. In either case, use a nitrogen evaporative concentrator to reduce the volume of the sample being analyzed to near dryness. Dissolve the residue in 5 ml of hexane.

5.1.6 Container No. 3 (Toluene Rinse). Add 100 µl of the Internal Standard solution (section 3.3.2) to the contents of the container. Concentrate the sample to a volume of about 1–5 ml using the rotary evaporator apparatus at a temperature of less than 37 °C. Rinse the sample container apparatus at a temperature of less than 37 °C. Rinse the sample container three times with small portions of toluene and add these to the concentrated solution and concentrate further to near dryness. Analyze the extract separately according to the procedures in sections 5.2 and 5.3, but concentrate the solution in a rotary evaporator apparatus rather than a nitrogen evaporative concentrator.

5.2 Sample Cleanup and Fractionation.

5.2.1 Silica Gel Column. Pack one end of a glass column, 20 mm x 230 mm, with glass wool. Add in sequence, 1 g silica gel, 2 g of sodium hydroxide impregnated silica gel, 1 g silica gel, 4 g of acid-modified silica gel, and 1 g of silica gel. Wash the column with 30 ml

of hexane and discard it. Add the sample extract, dissolved in 5 ml of hexane to the column with two additional 5-ml rinses. Elute the column with an additional 90 ml of hexane and retain the entire eluate. Concentrate this solution to a volume of about 1 ml using the nitrogen evaporative concentrator (section 2.3.7).

5.2.2 Basic Alumina Column. Shorten a 25-ml disposable Pasteur pipette to about 16 ml. Pack the lower section with glass wool and 12 g of basic alumina. Transfer the concentrated extract from the silica gel column to the top of the basic alumina column and elute the column sequentially with 120 ml of 0.5 percent methylene chloride in hexane followed by 120 ml of 35 percent methylene chloride in hexane. Discard the first 120 ml of eluate. Collect the second 120 ml of eluate and concentrate it to about 0.5 ml using the nitrogen evaporative concentrator.

5.2.3 AX–21 Carbon/Celite 545 Column. Remove the botton 0.5 in. from the tip of a 9-ml disposable Pasteur pipette. Insert a glass fiber filter disk in the top of the pipette 2.5 cm from the constriction. Add sufficient carbon/celite mixture to form a 2 cm column. Top with a glass wool plug. In some cases AX–21 carbon fines may wash through the glass wool plug and enter the sample. This may be prevented by adding a celite plug to the exit end of the column. Rinse the column in sequence with 2 ml of 50 percent benzene in ethyl acetate, 1 ml of 50 percent methylene chloride in cyclohexane, and 2 ml of hexane. Discard these rinses. Transfer the concentrate in 1 ml of hexane from the basic alumina column to the carbon/celite column along with 1 ml of hexane rinse. Elute the column sequentially with 2 ml of 50 percent methylene chloride in hexane and 2 ml of 50 percent benzene in ethyl acetate and discard these eluates. Invert the column and elute in the reverse direction with 13 ml of toluene. Collect this eluate. Concentrate the eluate in a rotary evaporator at 50 °C to about 1 ml. Transfer the concentrate to a Reacti-vial using a toluene rinse and concentrate to a volume of 200 µl using a stream of N_2. Store extracts at room temperature, shielded from light, until the analysis is performed.

5.3 Analysis. Analyze the sample with a gas chromatograph coupled to a mass spectrometer (GC/MS) using the instrumental parameters in sections 5.3.1 and 5.3.2. Immediately prior to analysis, add a 20 µl aliquot of the Recovery Standard solution from Table 1 to each sample. A 2 µl aliquot of the extract is injected into the GC. Sample extracts are first analyzed using the DB–5 capillary column to determine the concentration of each isomer of PCDD's and PCDF's (tetra-through octa-). If tetra-chlorinated dibenzofurans are detected in this analysis, then analyze another aliquot of the sample in a separate run, using the DB–225 column to measure the 2,3,7,8 tetra-chloro dibenzofuran isomer. Other column systems may be used, provided that the user is able to demonstrate using calibration and performance checks that the column system is able to meet the specifications of section 6.1.2.2.

5.3.1 Gas Chromatograph Operating Conditions.

5.3.1.1 Injector. Configured for capillary column, splitless, 250 °C.

5.3.1.2 Carrier Gas. Helium, 1–2 ml/min.

5.3.1.3 Oven. Initially at 150 °C. Raise by at least 40 °C/min to 190 °C and then at 3 °C/min up to 300 °C.

5.3.2 High Resolution Mass Spectrometer.

5.3.2.1 Resolution. 10000 m/e.

5.3.2.2 Ionization Mode. Electron impact.

5.3.2.3 Source Temperature 250 °C.

5.3.2.4 Monitoring Mode. Selected ion monitoring. A list of the various ions to be monitored is summarized in Table 3.

5.3.2.5 Identification Criteria. The following identification criteria shall be used for the characterization of polychlorinated dibenzodioxins and dibenzofurans.

1. The integrated ion-abundance ratio (M/M+2 or M+2/M+4) shall be within 15 percent of the theoretical value. The acceptable ion-abundance ratio ranges for the identification of chlorine-containing compounds are given in Table 4.

2. The retention time for the analytes must be within 3 seconds of the corresponding ^{13}C-labeled internal standard, surrogate or alternate standard.

3. The monitored ions, shown in Table 3 for a given analyte, shall reach their maximum within 2 seconds of each other.

4. The identification of specific isomers that do not have corresponding ^{13}C-labeled standards is done by comparison of the relative retention time (RRT) of the analyte to the nearest internal standard retention time with reference (i.e., within 0.005 RRT units) to the comparable RRT's found in the continuing calibration.

5. The signal to noise ratio for all monitored ions must be greater than 2.5.

6. The confirmation of 2, 3, 7, 8–TCDD and 2, 3, 7, 8–TCDF shall satisfy all of the above identification criteria.

7. For the identification of PCDF's, no signal may be found in the corresponding PCDPE channels.

5.3.2.6 Quantification. The peak areas for the two ions monitored for each analyte are summed to yield the total response for each analyte. Each internal standard is used to quantify the indigenous PCDD's or PCDF's in its homologous series. For example, the $^{13}C_{12}$–2,3,7,8-tetra chlorinated dibenzodioxin is used to calculate the concentrations of all other tetra chlorinated isomers. Recoveries of the tetra- and penta- internal standards are calculated using the $^{13}C_{12}$–1,2,3,4–TCDD. Recoveries of the hexa- through octa- internal standards are calculated using $^{13}C_{12}$–

1,2,3,7,8,9–HxCDD. Recoveries of the surrogate standards are calculated using the corresponding homolog from the internal standard.

6. Calibration

Same as Method 5 with the following additions.

6.1 GC/MS System.

6.1.1 Initial Calibration. Calibrate the GC/MS system using the set of five standards shown in Table 2. The relative standard deviation for the mean response factor from each of the unlabeled analytes (Table 2) and of the internal, surrogate, and alternate standards shall be less than or equal to the values in Table 5. The signal to noise ratio for the GC signal present in every selected ion current profile shall be greater than or equal to 2.5. The ion abundance ratios shall be within the control limits in Table 4.

6.1.2 Daily Performance Check.

6.1.2.1 Calibration Check. Inject on µl of solution Number 3 from Table 2. Calculate the relative response factor (RRF) for each compound and compare each RRF to the corresponding mean RRF obtained during the initial calibration. The analyzer performance is acceptable if the measured RRF's for the labeled and unlabeled compounds for the daily run are within the limits of the mean values shown in Table 5. In addition, the ion-abundance ratios shall be within the allowable control limits shown in Table 4.

6.1.2.2 Column Separation Check. Inject a solution of a mixture of PCDD's and PCDF's that documents resolution between 2,3,7,8–TCDD and other TCDD isomers. Resolution is defined as a valley between peaks that is less than 25 percent of the lower of the two peaks. Identify and record the retention time windows for each homologous series.

Perform a similar resolution check on the confirmation column to document the resolution between 2,3,7,8 TCDF and other TCDF isomers.

6.2 Lock Channels. Set mass spectrometer lock channels as specified in Table 3. Monitor the quality control check channels specified in Table 3 to verify instrument stability during the analysis.

7. Quality Control

7.1 Sampling Train Collection Efficiency Check. Add 100 µl of the surrogate standards in Table 1 to the absorbent cartridge of each train before collecting the field samples.

7.2 Internal Standard Percent Recoveries. A group of nine carbon labeled PCDD's and PCDF's representing, the tetra-through octachlorinated homologues, is added to every sample prior to extraction. The role of the internal standards is to quantify the native PCDD's and PCDF's present in the sample as well as to determine the overall method efficiency. Recoveries of the internal standards must be between 40 to 130 percent for the tetra-through hexachlorinated compounds while the range is 25 to 130 percent for the higher hepta- and octachlorinated homologues.

7.3 Surrogate Recoveries. The five surrogate compounds in Table 2 are added to the resin in the adsorbent sampling cartridge before the sample is collected. The surrogate recoveries are measured relative to the internal standards and are a measure of collection efficiency. They are not used to measure native PCDD's and PCDF's. All recoveries shall be between 70 and 130 percent. Poor recoveries for all the surrogates may be an indication of breakthrough in the sampling train. If the recovery of all standards is below 70 percent, the sampling runs must be repeated. As an alternative, the sampling runs do not have to be repeated if the final results are divided by the fraction of surrogate recovery. Poor recoveries of isolated surrogate compounds should not be grounds for rejecting an entire set of the samples.

7.4 Toluene QA Rinse. Report the results of the toluene QA rinse separately from the total sample catch. Do not add it to the total sample.

8. Quality Assurance

8.1 Applicability. When the method is used to analyze samples to demonstrate compliance with a source emission regulation, an audit sample must be analyzed, subject to availability.

8.2 Audit Procedure. Analyze an audit sample with each set of compliance samples. The audit sample contains tetra through octa isomers of PCDD and PCDF. Concurrently, analyze the audit sample and a set of compliance samples in the same manner to evaluate the technique of the analyst and the standards preparation. The same analyst, analytical reagents, and analytical system shall be used both for the compliance samples and the EPA audit sample.

8.3 Audit Sample Availability. Audit samples will be supplied only to enforcement agencies for compliance tests. The availability of audit samples may be obtained by writing: Source Test Audit Coordinator (MD–77B), Quality Assurance Division, Atmospheric Research and Exposure Assessment Laboratory, U.S. Environmental Protection Agency, Research Triangle Park, NC 27711, or by calling the Source Test Audit Coordinator (STAC) at (919) 541–7834. The request for the audit sample must be made at least 30 days prior to the scheduled compliance sample analysis.

8.4 Audit Results. Calculate the audit sample concentration according to the calculation procedure described in the audit instructions included with the audit sample. Fill in the audit sample concentration and the analyst's name on the audit response form included with the audit instructions.

Send one copy to the EPA Regional Office or the appropriate enforcement agency and a second copy to the STAC. The EPA Regional office or the appropriate enforcement agency will report the results of the audit to the laboratory being audited. Include this response with the results of the compliance samples in relevant reports to the EPA Regional Office or the appropriate enforcement agency.

9. Calculations

Same as Method 5, section 6 with the following additions.

9.1 Nomenclature.

A_{ai}=Integrated ion current of the noise at the retention time of the analyte.

A^*_{ci}=Integrated ion current of the two ions characteristic of the internal standard i in the calibration standard.

A_{cij}=Integrated ion current of the two ions characteristic of compound i in the jth calibration standard.

A^*_{cij}=Integrated ion current of the two ions characteristic of the internal standard i in the jth calibration standard.

A_{csi}=Integrated ion current of the two ions characteristic of surrogate compound i in the calibration standard.

A_i=Integrated ion current of the two ions characteristic of compound i in the sample.

A^*_i=Integrated ion current of the two ions characteristic of internal standard i in the sample.

A_{rs}=Integrated ion current of the two ions characteristic of the recovery standard.

A_{si}=Integrated ion current of the two ions characteristic of surrogate compound i in the sample.

C_i=Concentration of PCDD or PCDF i in the sample, pg/M^3.

C_T=Total concentration of PCDD's or PCDF's in the sample, pg/M^3.

m_{ci}=Mass of compound i in the calibration standard injected into the analyzer, pg.

m_{rs}=Mass of recovery standard in the calibration standard injected into the analyzer, pg.

m_{si}=Mass of surrogate compound in the calibration standard, pg.

RRF_i=Relative response factor.

RRF_{rs}=Recovery standard response factor.

RRF_s=Surrogate compound response factor.

9.2 Average Relative Response Factor.

$$RRF_i = \frac{1}{n}\sum_{j=1}^{n}\frac{A_{cij}\,m^*_{ci}}{A^*_{cij}\,m_{ci}} \qquad \text{Eq. 23-1}$$

9.3 Concentration of the PCDD's and PCDF's.

$$C_i = \frac{m_i^* A_i}{A_i^* RRF_i V_{mstd}} \qquad \text{Eq. 23-2}$$

9.4 Recovery Standard Response Factor.

$$RRF_{rs} = \frac{A_{ci}^* m_{rs}}{A_{rs} m_{ci}^*} \qquad \text{Eq. 23-3}$$

9.5 Recovery of Internal Standards (R*).

$$R^* = \frac{A_i^* m_{rs}}{A_{rs} RF_{rs} m_i^*} \times 100\% \qquad \text{Eq. 23-4}$$

9.6 Surrogate Compound Response Factor.

$$RRF_s = \frac{A_{ci}^* m_s}{A_{cis} m_{ci}^*} \qquad \text{Eq. 23-5}$$

9.7 Recovery of Surrogate Compounds (R_s).

$$R_s = \frac{A_s m_i^*}{A_i^* RRF_s m_s} \times 100\% \qquad \text{Eq. 23-6}$$

9.8 Minimum Detectable Limit (MDL).

$$MDL = \frac{2.5\, A_{ai} m_i^*}{A_{ci}^* RRF_i} \qquad \text{Eq. 23-7}$$

9.9 Total Concentration of PCDD's and PCDF's in the Sample.

$$C_{Tr} = \sum_{i=1}^{n} C_i \qquad \text{Eq. 23-8}$$

Any PCDD's or PCDF's that are reported as nondetected (below the MDL) shall be counted as zero for the purpose of calculating the total concentration of PCDD's and PCDF's in the sample.

10. Bibliography

1. American Society of Mechanical Engineers. Sampling for the Determination of Chlorinated Organic Compounds in Stack Emissions. Prepared for U.S. Department of Energy and U.S. Environmental Protection Agency. Washington DC. December 1984. 25 p.

2. American Society of Mechanical Engineers. Analytical Procedures to Assay Stack Effluent Samples and Residual Combustion Products for Polychlorinated Dibenzo-p-Dioxins (PCDD) and Polychlorinated Dibenzofurans (PCDF). Prepared for the U.S. Department of Energy and U.S. Environmental Protection Agency. Washington, DC. December 1984. 23 p.

3. Thompson, J. R. (ed.). Analysis of Pesticide Residues in Human and Environmental Samples. U.S. Environmental Protection Agency. Research Triangle Park, NC. 1974.

4. Triangle Laboratories. Case Study: Analysis of Samples for the Presence of Tetra Through Octachloro-p-Dibenzodioxins and Dibenzofurans. Research Triangle Park, NC. 1988. 26 p.

5. U.S. Environmental Protection Agency. Method 8290—The Analysis of Polychlorinated Dibenzo-p-dioxin and Polychlorinated Dibenzofurans by High-Resolution Gas Chromotography/High-Resolution Mass Spectrometry. In: Test Methods for Evaluating Solid Waste. Washington, DC. SW–846.

TABLE 1—COMPOSITION OF THE SAMPLE FORTIFICATION AND RECOVERY STANDARDS SOLUTIONS

Analyte	Concentration (pg/μl)
Internal Standards:	
$^{13}C_{12}$-2,3,7,8-TCDD	100
$^{13}C_{12}$-1,2,3,7,8-PeCDD	100
$^{13}C_{12}$-1,2,3,6,7,8-HxCDD	100
$^{13}C_{12}$-1,2,3,4,6,7,8-HpCDD	100
$^{13}C_{12}$-OCDD	100
$^{13}C_{12}$-2,3,7,8-TCDF	100
$^{13}C_{12}$-1,2,3,7,8-PeCDF	100
$^{13}C_{12}$-1,2,3,6,7,8-HxCDF	100
$^{13}C_{12}$-1,2,3,4,6,7,8-HpCDF	100
Surrogate Standards:	
$^{37}Cl_4$-2,3,7,8-TCDD	100
$^{13}C_{12}$-1,2,3,4,7,8-HxCDD	100
$^{13}C_{12}$-2,3,4,7,8-PeCDF	100
$^{13}C_{12}$-1,2,3,4,7,8-HxCDF	100
$^{13}C_{12}$-1,2,3,4,7,8,9-HpCDF	100
Recovery Standards:	
$^{13}C_{12}$-1,2,3,4-TCDD	500
$^{13}C_{12}$-1,2,3,7,8,9-HxCDD	500

TABLE 2—COMPOSITION OF THE INITIAL CALIBRATION SOLUTIONS

Compound	Concentrations (pg/μL)				
	Solution No.				
	1	2	3	4	5
Alternate Standard:					
$^{13}C_{12}$-1,2,3,7,8,9-HxCDF	2.5	5	25	250	500
Recovery Standards:					
$^{13}C_{12}$-1,2,3,4-TCDD	100	100	100	100	100
$^{13}C_{12}$-1,2,3,7,8,9-HxCDD	100	100	100	100	100

TABLE 3—ELEMENTAL COMPOSITIONS AND EXACT MASSES OF THE IONS MONITORED BY HIGH RESOLUTION MASS SPECTROMETRY FOR PCDD'S AND PCDF'S

Descriptor No.	Accurate mass	Ion type	Elemental composition	Analyte
2	292.9825	LOCK	C_7F_{11}	PFK
	303.9016	M	$C_{12}H_4{}^{35}Cl_4O$	TCDF
	305.8987	M+2	$C_{12}H_4{}^{35}Cl^{37}O$	TCDF
	315.9419	M	$^{13}C_{12}H_4{}^{35}Cl_4O$	TCDF (S)
	317.9389	M+2	$^{13}C_{12}H_4{}^{35}Cl_3{}^{37}ClO$	TCDF (S)
	319.8965	M	$C_{12}H_4{}^{35}ClO_2$	TCDD
	321.8936	M+2	$C_{12}H_4{}^{35}Cl_3{}^{37}ClO_2$	TCDD
	327.8847	M	$C_{12}H_4{}^{37}Cl_4O_2$	TCDD (S)
	330.9792	QC	C_7F_{13}	PFK
	331.9368	M	$^{13}C_{12}H_4{}^{35}Cl_4O_2$	TCDD (S)
	333.9339	M+2	$^{13}C_{12}H_4{}^{35}Cl^{37}ClO_2$	TCDD (S)
	339.8597	M+2	$C_{12}H_3{}^{35}Cl_4{}^{37}ClO$	PECDF
	341.8567	M+4	$C_{12}H_3{}^{35}Cl_3{}^{37}Cl_2O$	PeCDF
	351.9000	M+2	$^{13}C_{12}H_3{}^{35}Cl_4{}^{37}ClO$	PeCDF (S)
	353.8970	M+4	$^{13}C_{12}H_3{}^{35}Cl^{3537}Cl_2O$	PeCDF (S)
	355.8546	M+2	$C_{12}H_3{}^{35}Cl_3{}37ClO_2$	PeCDD
	357.8516	M+4	$C_{12}H_3{}^{35}Cl_3{}^{37}Cl_2O_2$	PeCDD
	367.8949	M+2	$^{13}C_{12}H_3{}^{35}Cl_4{}^{37}ClO_2$	PeCDD (S)
	369.8919	M+4	$^{13}C_{12}H_3{}^{35}Cl_3{}^{37}\ Cl_2O_2$	PeCDD (S)
	375.8364	M+2	$C_{12}H_4{}^{35}Cl_5{}^{37}ClO$	HxCDPE
	409.7974	M+2	$C_{12}H_3{}^{35}Cl_6{}^{37}ClO$	HpCPDE
3	373.8208	M+2	$C_{12}H_235Cl_5{}^{37}ClO$	HxCDF
	375.8178	M+4	$C_{12}H_2{}^{35}Cl_4{}^{37}Cl_2O$	HxCDF
	383.8639	M	$^{13}C_{12}H_2{}^{35}Cl_6O$	HxCDF (S)
	385.8610	M+2	$^{13}C_{12}H_2{}^{35}Cl_5{}^{37}ClO$	HxCDF (S)
	389.8157	M+2	$C_{12}H_2{}^{35}Cl_5{}^{37}ClO_2$	HxCDD
	391.8127	M+4	$C_{12}H_2{}^{35}Cl_4{}^{37}Cl_2O_2$	HxCDD
	392.9760	LOCK	C_9F_{15}	PFK
	401.8559	M+2	$^{13}C_{12}H_2{}^{35}Cl_5{}^{37}ClO_2$	HxCDD (S)
	403.8529	M+4	$^{13}C_{12}H_2{}^{35}Cl_4{}^{37}Cl_2O$	HxCDD (S)
	445.7555	M+4	$C_{12}H_2{}^{35}Cl_6{}^{37}Cl_2O$	OCDPE
	430.9729	QC	C_9F_{17}	PFK
4	407.7818	M+2	$C_{12}H^{35}Cl_6{}^{37}ClO$	HpCDF
	409.7789	M+4	$C_{12}H^{35}Cl_5{}^{37}Cl_2O$	HpCDF

TABLE 3—ELEMENTAL COMPOSITIONS AND EXACT MASSES OF THE IONS MONITORED BY HIGH RESOLUTION MASS SPECTROMETRY FOR PCDD'S AND PCDF'S—Continued

Descriptor No.	Accurate mass	Ion type	Elemental composition	Analyte
	417.8253	M	$^{13}C_{12}H^{35}Cl_7O$	HpCDF (S)
	419.8220	M+2	$^{13}C_{12}H^{35}Cl_6{}^{37}ClO$	HpCDF (S)
	423.7766	M+2	$C_{12}H^{35}Cl_6{}^{37}ClO_2$	HpCDD
	425.7737	M+4	$C_{12}H^{35}Cl_5{}^{37}Cl_2O_2$	HpCDD
	435.8169	M+2	$^{13}C_{12}H^{35}Cl_6{}^{37}ClO_2$	HpCDD (S)
	437.8140	M+4	$^{13}C_{12}H^{35}Cl_5{}^{37}Cl_2O_2$	HpCDD (S)
	479.7165	M+4	$C_{12}H^{35}Cl_7{}^{37}Cl_2O$	NCPDE
	430.9729	LOCK	C_9F_{17}	PFK
	441.7428	M+2	$C_{12}{}^{35}Cl_7{}^{37}ClO$	OCDF
	443.7399	M+4	$C_{12}{}^{35}Cl_6{}^{37}Cl_2O$	OCDF
	457.7377	M+2	$C_{12}{}^{35}Cl_7{}^{37}ClO_2$	OCDD
	459.7348	M+4	$C_{12}{}^{35}Cl_6{}^{37}Cl_2O_2$	OCDD
	469.7779	M+2	$^{13}C_{12}{}^{35}Cl_7{}^{37}ClO_2$	OCDD (S)
	471.7750	M+4	$^{13}C_{12}{}^{35}Cl_6{}^{37}Cl_2O_2$	OCDD (S)
	513.6775	M+4	$C_{12}{}^{35}Cl_8{}^{37}Cl_2O_2$	DCDPE
	442.9728	QC	$C_{10}F_{17}$	PFK

(a) The following nuclidic masses were used:
H = 1.007825
C = 12.000000
^{13}C = 13.003355
F = 18.9984
O = 15.994915
^{35}Cl = 34.968853
^{37}Cl = 36.965903
S = Labeled Standard
QC = Ion selected for monitoring instrument stability during the GC/MS analysis.

TABLE 4—ACCEPTABLE RANGES FOR ION-ABUNDANCE RATIOS OF PCDD'S AND PCDF'S

No. of chlorine atoms	Ion type	Theoretical ratio	Control limits	
			Lower	Upper
4	M/M+2	0.77	0.65	0.89
5	M+2/M+4	1.55	1.32	1.78
6	M+2/M+4	1.24	1.05	1.43
6[a]	M/M+2	0.51	0.43	0.59
7[b]	M/M+2	0.44	0.37	0.51
7	M+2/M+4	1.04	0.88	1.20
8	M+2/M+4	0.89	0.76	1.02

[a] Used only for ^{13}C-HxCDF.
[b] Used only for ^{13}C-HpCDF.

TABLE 5—MINIMUM REQUIREMENTS FOR INITIAL AND DAILY CALIBRATION RESPONSE FACTORS

Compound	Relative response factors	
	Initial calibration RSD	Daily calibration % difference
Unlabeled Analytes:		
2,3,7,8-TCDD	25	25
2,3,7,8-TCDF	25	25
1,2,3,7,8-PeCDD	25	25
1,2,3,7,8-PeCDF	25	25
2,3,4,7,8-PeCDF	25	25
1,2,4,5,7,8-HxCDD	25	25
1,2,3,6,7,8-HxCDD	25	25
1,2,3,7,8,9-HxCDD	25	25
1,2,3,4,7,8-HxCDF	25	25
1,2,3,6,7,8-HxCDF	25	25
1,2,3,7,8,9-HxCDF	25	25
2,3,4,6,7,8-HxCDF	25	25
1,2,3,4,6,7,8-HpCDD	25	25
1,2,3,4,6,7,8-HpCDF	25	25
OCDD	25	25

TABLE 5—MINIMUM REQUIREMENTS FOR INITIAL AND DAILY CALIBRATION RESPONSE FACTORS—Continued

Compound	Relative response factors	
	Initial calibration RSD	Daily calibration % difference
OCDF	30	30
Internal Standards:		
$^{13}C_{12}$-2,3,7,8-TCDD	25	25
$^{13}C_{12}$-1,2,3,7,8-PeCDD	30	30
$^{13}C_{12}$-1,2,3,6,7,8-HxCDD	25	25
$^{13}C_{12}$-1,2,3,4,6,7,8-HpCDD	30	30
$^{13}C_{12}$-OCDD	30	30
$^{13}C_{12}$-2,3,7,8-TCDF	30	30
$^{13}C_{12}$-1,2,3,7,8-PeCDF	30	30
$^{13}C_{12}$-1,2,3,6,7,8-HxCDF	30	30
$^{13}C_{12}$-1,2,3,4,6,7,8-HpCDF	30	30
Surrogate Standards:		
$^{37}Cl_4$-2,3,7,8-TCDD	25	25
$^{13}C_{12}$-2,3,4,7,8-PeCDF	25	25
$^{13}C_{12}$-1,2,3,4,7,8-HxCDD	25	25
$^{13}C_{12}$-1,2,3,4,7,8-HxCDF	25	25
$^{13}C_{12}$-1,2,3,4,7,8,9-HpCDF	25	25
Alternate Standard:		
$^{13}C_{12}$-1,2,3,7,8,9-HxCDF	25	25

METHOD 24—DETERMINATION OF VOLATILE MATTER CONTENT, WATER CONTENT, DENSITY, VOLUME SOLIDS, AND WEIGHT SOLIDS OF SURFACE COATINGS

1. *Applicability and Principle*

1.1 Applicability. This method applies to the determination of volatile matter content, water content, density, volume solids, and weight solids of paint, varnish, lacquer, or related surface coatings.

1.2 Principle. Standard methods are used to determine the volatile matter content, water content, density, volume solids, and weight solids of the paint, varnish, lacquer, or related surface coatings.

2. *Applicable Standard Methods*

Use the apparatus, reagents, and procedures specified in the standard methods below:

2.1 ASTM D1475–60 (Reapproved 1980), Standard Test Method for Density of Paint, Varnish, Lacquer, and Related Products (incorporated by reference—see §60.17).

2.2 ASTM D2369–81, Standard Test Method for Volatile Content of Coatings (incorporated by reference—see §60.17).

2.3 ASTM D3792–79, Standard Test Method for Water Content of Water-Reducible Paints by Direct Injection into a Gas Chromatograph (incorporated by reference—see §60.17).

2.4 ASTM D4017–81, Standard Test Method for Water in Paints and Paint Materials by the Karl Fischer Titration Method (incorporated by reference—see §60.17).

2.5 ASTM D4457–85 Standard Test Method for Determination of Dichloromethane and 1,1,1–Trichloroethane in Paints and Coatings by Direct Injection into a Gas Chromatograph (incorporated by reference—see §60.17).

2.6 ASTM D 5403–93 Standard Test Methods for Volatile Content of Radiation Curable Materials (incorporated by reference—see §60.17).

3. *Procedure*

3.1 Multicomponent Coatings. Multicomponent coatings are coatings that are packaged in two or more parts, which are combined before application. Upon combination a coreactant from one part of the coating chemically reacts, at ambient conditions, with a coreactant from another part of the coating. To determine the total volatile content, water content, and density of multicomponent coatings, follow the procedures in section 3.7.

3.2 Non Thin-film Ultraviolet Radiation-cured Coating. To determine volatile content of non thin-film ultraviolet radiation-cured (UV radiation-cured) coatings, follow the procedures in Section 3.9. Determine water content, density and solids content of the UV-cured coatings according to Sections 3.4, 3.5, and 3.6, respectively. The UV-cured coatings are coatings which contain unreacted monomers that are polymerized by exposure to ultraviolet light. To determine if a coating or ink can be classified as a thin-film UV cured coating or ink, use the following equation:

$$C = F\ A\ D \qquad \text{Eq. 24–1}$$

Where:

A=Area of substrate, in^2, cm^2.

C=Amount of coating or ink added to the substrate, g.

D=Density of coating or ink, g/in^3 (g/cm^3)

F=Manufacturer's recommended film thickness, in (cm).

If C is less than 0.2 g and A is greater than or equal to 35 in^2 (225 cm^2) then the coating or ink is considered a thin-film UV radiation-cured coating for determining applicability of ASTM D 5403–93.

NOTE: As noted in Section 1.4 of ASTM D 5403–93, this method may not be applicable to radiation curable materials wherein the volatile material is water. For all other coatings not covered by Sections 3.1 or 3.2 analyze as follows:

3.3 Volatile Matter Content. Use the procedure in ASTM D2369–81 (incorporated by reference—see §60.17) to determine the volatile matter content (may include water) of the coating. Record the following information:

W_1=Weight of dish and sample before heating, g.

W_2=Weight of dish and sample after heating, g.

W_3=Sample weight, g.

Run analyses in pairs (duplicate sets) for each coating until the criterion in Section 4.3 is met. Calculate the weight fraction of the volatile matter (W_v) for each analysis as follows:

$$W_v = \frac{W_1 - W_2}{W_3} \qquad \text{Eq. 24-2}$$

Record the arithmetic average ($\bar{W}_v$).

3.4 Water Content. For waterborne (water reducible) coatings only, determine the weight fraction of water (W_W) using either ''Standard Content Method Test for Water of Water-Reducible Paints by Direct Injection into a Gas Chromatograph'' or ''Standard Test Method for Water in Paint and Paint Materials by Karl Fischer Method.'' (These two methods are incorporated by reference—see §60.17.) A waterborne coating is any coating which contains more than 5 percent water by weight in its volatile fraction. Run duplicate sets of determinations until the criterion in Section 4.3 is met. Record the arithmetic average (W_w).

3.5 Coating Density. Determine the density (D_c, kg/liter) of the surface coating using the procedure in ASTM D1475–60 (Reapproved 1980) (incorporated by reference—see §60.17).

Run duplicate sets of determinations for each coating until the criterion in Section 4.3 is met. Record the arithmetic average (D_c).

3.6 Solids Content. Determine the volume fraction (V_s) solids of the coating by calculation using the manufacturer's formulation.

3.7 Exempt Solvent Content. Determine the weight fraction of exempt solvents (W_E) by using ASTM Method D4457–85 (incorporated by reference—see §60.17). Run a duplicate set of determinations and record the arithmetic average (W_E)

NOTE: Exempt solvents are defined as those solvents listed in 57 FR 3941, February 3, 1992. Dichloromethane and 1,1,1-trichloroethane are listed exempt solvents and may be used in coatings.

3.8 To determine the total volatile content, water content, and density of multicomponent coatings, use the following procedures:

3.8.1 Prepare about 100 ml of sample by mixing the components in a storage container, such as a glass jar with a screw top or a metal can with a cap. The storage container should be just large enough to hold the mixture. Combine the components (by weight or volume) in the ratio recommended by the manufacturer. Tightly close the container between additions and during mixing to prevent loss of volatile materials. However, most manufacturers mixing instructions are by volume. Because of possible error caused by expansion of the liquid when measuring the volume, it is recommended that the components be combined by weight. When weight is used to combine the components and the manufacturer's recommended ratio is by volume, the density must be determined by section 3.5.

3.8.2 Immediately after mixing, take aliquots from this 100 ml sample for determination of the total volatile content, water content, and density. To determine water content, follow section 3.4. To determine density, follow section 3.5. To determine total volatile content, use the apparatus and reagents described in ASTM D2369–81, sections 3 and 4, respectively (incorporated by reference, and see §60.17) the following procedures:

3.8.2.1 Weigh and record the weight of an aluminum foil weighing dish. Add 31±l of suitable solvent as specified in ASTM D2369–81 to the weighing dish. Using a syringe as specified in ASTM D2369–81, weigh to 1 mg, by difference, a sample of coating into the weighing dish. For coatings believed to have a volatile content less than 40 weight percent, a suitable size is 0.3±0.10 g, but for coatings believed to have a volatile content greater than 40 weight percent, a suitable size is 0.5±0.10 g.

NOTE: If the volatile content determined pursuant to section 5 is not in the range corresponding to the sample size chosen repeat the test with the appropriate sample size. Add the specimen dropwise, shaking (swirling) the dish to disperse the specimen completely in the solvent. If the material forms a lump that cannot be dispersed, discard the specimen and prepare a new one. Similarly, prepare a duplicate. The sample shall stand for a minimum of 1 hour, but no more than 24 hours prior to being oven dried at 110 °C±5 °C. for 1 hour.

3.8.2.2 Heat the aluminum foil dishes containing the dispersed specimens in the forced draft oven for 60 min at 110±5 °C. Caution—provide adequate ventilation, consistent with accepted laboratory practice, to prevent solvent vapors from accumulating to a dangerous level.

3.8.2.3 Remove the dishes from the oven, place immediately in a desiccator, cool to ambient temperature, and weigh to within 1 mg.

3.8.2.4 Run analyses in pairs (duplicate sets) for each coating mixture until the criterion in section 4.3 is met. Calculate W_v following Equation 24–2 and record the arithmetic average.

3.9 UV-cured Coating's Volatile Matter Content. Use the procedure in ASTM D 5403–93 (incorporated by reference—see §60.17) to determine the volatile matter content of the coating except the curing test described in NOTE 2 of ASTM D 5403–93 is required.

4. *Data Validation Procedure*

4.1 Summary. The variety of coatings that may be subject to analysis makes it necessary to verify the ability of the analyst and the analytical procedures to obtain reproducible results for the coatings tested. This is done by running duplicate analyses on each sample tested and comparing results with the within-laboratory precision statements for each parameter. Because of the inherent increased imprecision in the determination of the VOC content of waterborne coatings as the weight percent water increases, measured parameters for waterborne coatings are modified by the appropriate confidence limits based on between-laboratory precision statements.

4.2 Analytical Precision Statements. The within-laboratory and between-laboratory precision statements are given below:

	Within-laboratory	Between-laboratory
Volatile matter content, W_v	1.5 pct W_v.	4.7 pct W_v.
Water content, W_w	2.9 pct W_w.	7.5 pct W_w.
Density, D_c	0.001 kg/liter.	0.002 kg/liter.

4.3 Sample Analysis Criteria. For W_v and W_w, run duplicate analyses until the difference between the two values in a set is less than or equal to the within-laboratory precision statement for that parameter. For D_c run duplicate analyses until each value in a set deviates from the mean of the set by no more than the within-laboratory precision

statement. If after several attempts it is concluded that the ASTM procedures cannot be used for the specific coating with the established within-laboratory precision, the Administrator will assume responsibility for providing the necessary procedures for revising the method or precision statements upon written request to: Director, Emission Standards and Engineering Division, (MD–13) Office of Air Quality Planning and Standards, U.S. Environmental Protection Agency, Research Triangle Park, NC 27711.

4.4 Confidence Limit Calculations for Waterborne Coatings. Based on the between-laboratory precision statements, calculate the confidence limits for waterborne coatings as follows:

To calculate the lower confidence limit, subtract the appropriate between-laboratory precision value from the measured mean value for that parameter. To calculate the upper confidence limit, add the appropriate between-laboratory precision value to the measured mean value for that parameter. For W_v and D_c, use the lower confidence limits, and for W_w, use the upper confidence limit. Because V_s is calculated, there is no adjustment for the parameter.

5. *Calculations*

5.1 Nonaqueous Volatile Matter.

5.1.1 Solvent-borne Coatings.

$$W_o = W_v \qquad \text{Eq. 24–3}$$

Where:

W_o=Weight fraction nonaqueous volatile matter, g/g.

5.1.2 Waterborne Coatings.

$$W_o = W_v - W_w \qquad \text{Eq. 24–4}$$

5.1.3 Coatings Containing Exempt Solvents.

$$W_o = W_v - W_E - W_w \qquad \text{Eq. 24-5}$$

where:

W_E=weight fraction of exempt solvents, g/g.

5.2 Weight Fraction Solids.

$$W_s = 1 - W_v \qquad \text{Eq. 25-5}$$

where:

W_s=weight fraction of solids, g/g.

METHOD 24A—DETERMINATION OF VOLATILE MATTER CONTENT AND DENSITY OF PRINTING INKS AND RELATED COATINGS

1. *Applicability and Principle*

1.1 Applicability. This method applies to the determination of the volatile organic compound (VOC) content and density of solvent-borne (solvent reducible) printing inks or related coatings.

1.2 Principle. Separate procedures are used to determine the VOC weight fraction and density of the coating and the density of the solvent in the coating. The VOC weight fraction is determined by measuring the weight loss of a known sample quantity which has been heated for a specified length of time at a specified temperature. The density of both the coating and solvent are measured by a standard procedure. From this information, the VOC volume fraction is calculated.

2. *Procedure*

2.1 Weight Fraction VOC.

2.1.1 Apparatus.

2.1.1.1 Weighing Dishes. Aluminum foil, 58 mm in diameter by 18 mm high, with a flat bottom. There must be at least three weighing dishes per sample.

2.1.1.2 Disposable Syringe. 5 ml.

2.1.1.3 Analytical Balance. To measure to within 0.1 mg.

2.1.1.4 Oven. Vacuum oven capable of maintaining a temperature of 120±2 °C and an absolute pressure of 510 ±51 mm Hg for 4 hours. Alternatively, a forced draft oven capable of maintaining a temperature of 120±2 °C for 24 hours.

2.1.2 Analysis. Shake or mix the sample thoroughly to assure that all the solids are completely suspended. Label and weigh to the nearest 0.1 mg a weighing dish and record this weight (M_{x1}).

Using a 5-ml syringe without a needle remove a sample of the coating. Weigh the syringe and sample to the nearest 0.1 mg and record this weight (M_{cY1}). Transfer 1 to 3 g of the sample to the tared weighing dish. Reweigh the syringe and sample to the nearest 0.1 mg and record this weight (M_{cY2}). Heat the weighing dish and sample in a vacuum oven at an absolute pressure of 510±51 mm Hg and a temperature of 120±2 °C for 4 hours. Alternatively, heat the weighing dish and sample in a forced draft oven at a temperature of 120±2 °C for 24 hours. After the weighing dish has cooled, reweigh it to the nearest 0.1 mg and record the weight (M_{x2}). Repeat this procedure for a total of three determinations for each sample.

2.2 Coating Density. Determine the density of the ink or related coating according to the procedure outlined in ASTM D 1475–60 (Reapproved 1980), (incorporated by reference—see § 60.17).

2.3 Solvent Density. Determine the density of the solvent according to the procedure outlined in ASTM D 1475–60 (reapproved 1980). Make a total of three determinations for each coating. Report the density D_o as the arithmetic average of the three determinations.

3. *Calculations*

3.1 Weight Fraction VOC. Calculate the weight fraction volatile organic content W_o using the following equation:

$$W_o = \frac{M_{x1} + M_{cY1} - M_{cY2} - M_{x2}}{M_{cY1} - M_{cY2}} \qquad \text{Eq. 24A-1}$$

Report the weight fraction VOC W_o as the arithmetic average of the three determinations.

3.2 Volume Fraction VOC. Calculate the volume fraction volatile organic content V_o using the following equation:

$$V_o = (W_o D_c / D_o$$

Eq. 24A–2

4. *Bibliography*

1. Standard Test Method for Density of Paint, Varnish, Lacquer, and Related Products. ASTM Designation D 1475–60 (Reapproved 1980).

2. Teleconversation. Wright, Chuck, Inmont Corporation with Reich, R. A., Radian Corporation. September 25, 1979. Gravure Ink Analysis.

3. Teleconversation. Oppenheimer, Robert, Gravure Research Institute with Burt, Rick, Radian Corporation, November 5, 1979. Gravure Ink Analysis.

METHOD 25—DETERMINATION OF TOTAL GASEOUS NONMETHANE ORGANIC EMISSIONS AS CARBON

1. Applicability and Principle

1.1 Applicability. This method applies to the measurement of volatile organic compounds (VOC) as total gaseous nonmethane organics (TGNMO) as carbon in source emissions. Organic particulate matter will interfere with the analysis and, therefore, a particulate filter is required. The minimum detectable for the method is 50 ppm as carbon.

When carbon dioxide (CO_2) and water vapor are present together in the stack, they can produce a positive bias in the sample. The magnitude of the bias depends on the concentrations of CO_2 and water vapor. As a guideline, multiply the CO_2 concentration, expressed as volume percent, times the water vapor concentration. If this product does not exceed 100, the bias can be considered insignificant. For example, the bias is not significant for a source having 10 percent CO_2 and 10 percent water vapor, but it would be significant for a source near the detection limit having 10 percent CO_2 and 20 percent water vapor.

This method is not the only method that applies to the measurement of TGNMO. Costs, logistics, and other practicalities of source testing may make other test methods more desirable for measuring VOC contents of certain effluent streams. Proper judgment is required in determining the most applicable VOC test method. For example, depending upon the molecular weight of the organics in the effluent stream, a totally automated semicontinuous nonmethane organics (NMO) analyzer interfaced directly to the source may yield accurate results. This approach has the advantage of providing emission data semicontinuously over an extended time period.

Direct measurement of an effluent with a flame ionization detector (FID) analyzer may be appropriate with prior characterization of the gas stream and knowledge that the detector responds predictably to the organic compounds in the stream. If present, methane (CH_4) will, of course, also be measured. The FID can be applied to the determination of the mass concentration of the total molecular structure of the organic emissions under any of the following limited conditions: (1) Where only one compound is known to exist; (2) when the organic compounds consist of only hydrogen and carbon; (3) where the relative percentages of the compounds are known or can be determined, and the FID responses to the compounds are known; (4) where a consistent mixture of the compounds exists before and after emission control and *only* the relative concentrations are to be assessed; or (5) where the FID can be calibrated against mass standards of the compounds emitted (solvent emissions, for example).

Another example of the use of a direct FID is as a screening method. If there is enough information available to provide a rough estimate of the analyzer accuracy, the FID analyzer can be used to determine the VOC content of an uncharacterized gas stream. With a sufficient buffer to account for possible inaccuracies, the direct FID can be a useful tool to obtain the desired results without costly exact determination.

In situations where a qualitative/quantitative analysis of an effluent stream is desired or required, a gas chromatographic FID system may apply. However, for sources emitting numerous organics, the time and expense of this approach will be formidable.

1.2 Principle. An emission sample is withdrawn from the stack at a constant rate through a heated filter and a chilled condensate trap by means of an evacuated sample tank. After sampling is completed, the TGNMO are determined by independently analyzing the condensate trap and sample tank fractions and combining the analytical results. The organic content of the condensate trap fraction is determined by oxidizing the NMO to CO_2 and quantitatively collecting the effluent in an evacuated vessel; then a portion of the CO_2 is reduced to CH_4 and measured by an FID. The organic content of the sample tank fraction is measured by injecting a portion of the sample into a gas chromatographic column to separate the NMO from carbon monoxide (CO), CO_2, and CH_4; the NMO are oxidized to CO_2, reduced to CH_4, and measured by an FID. In this manner, the variable response of the FID associated with different types of organics is eliminated.

2. Apparatus

2.1 Sampling. The sampling system consists of a heated probe, heated filter, condensate trap, flow control system, and sample tank (Figure 25–1). The TGNMO sampling equipment can be constructed from commercially available components and components fabricated in a machine shop. The following equipment is required:

2.1.1 Heated Probe. 6.4-mm (¼-in.) OD stainless steel tubing with a heating system capable of maintaining a gas temperature at the exit end of at least 129 °C (265 °F). The probe shall be equipped with a thermocouple at the exit end to monitor the gas temperature.

A suitable probe is shown in Figure 25–1. The nozzle is an elbow fitting attached to the front end of the probe while the thermocouple is inserted in the side arm of a tee fitting attached to the rear of the probe. The probe is wrapped with a suitable length of high temperature heating tape, and then covered with two layers of glass cloth insulation and one layer of aluminum foil.

NOTE. If it is not possible to use a heating system for safety reasons, an unheated system with an in-stack filter is a suitable alternative.

2.1.2 Filter Holder. 25-mm (15⁄16-in.) ID Gelman filter holder with stainless steel body and stainless steel support screen with the Viton O-ring replaced by a Teflon O-ring.

NOTE. Mention of trade names or specific products does not constitute endorsement by the Environmental Protection Agency.

2.1.3 Filter Heating System. A metal box consisting of an inner and an outer shell separated by insulating material with a heating element in the inner shell capable of maintaining a gas temperature at the filter of 121±3 °C (250±5 °F).

A suitable heating box is shown in Figure 25–2. The outer shell is a metal box that measures 102 mm×280 mm×292 mm (4 in.×11 in.×11½ in.), while the inner shell is a metal box measuring 76 mm×229 mm×241 mm (3 in.×9 in.×9½ in.). The inner box is supported by 13-mm (½-in.) phenolic rods. The void space between the boxes is filled with fiberfrax insulation which is sealed in place by means of a silicon rubber bead around the upper sides of the box. A removable lid made in a similar manner, with a 25-mm (1-in.) gap between the parts, is used to cover the heating chamber.

The inner box is heated witn a 250-watt cartridge heater, shielded by a stainless steel shroud. The heater is regulated by a thermostatic temperature controller which is set to maintain a temperature of 121 °C as measured by a thermocouple in the gas line just before the filter. An additional thermocouple is used to monitor the temperature of the gas behind the filter.

2.1.4 Condensate Trap. 9.5-mm (⅜-in.) OD 316 stainless steel tubing bent into a U-shape. Exact dimensions are shown in Figure 25–3. The tubing shall be packed with coarse quartz wool, to a density of approximately 0.11 g/cc before bending. While the condensate trap is packed with dry ice in the Dewar, an ice bridge may form between the arms of the condensate trap making it difficult to remove the condensate trap. This problem can be prevented by attaching a steel plate between the arms of the condensate trap in the same plane as the arms to completely fill the intervening space.

2.1.5 Valve. Stainless steel shut-off valve for starting and stopping sample flow.

2.1.6 Metering Valve. Stainless steel control valve for regulating the sample flow rate through the sample train.

2.1.7 Rotameter. Glass tube with stainless steel fittings, capable of measuring sample flow in the range of 60 to 100 cc/min.

2.1.8 Sample Tank. Stainless steel or aluminum tank with a minimum volume of 4 liters.

2.1.9 Mercury Manometer or Absolute Pressure Gauge. Capable of measuring pressure to within 1 mm Hg in the range of 0 to 900 mm.

2.1.10 Vacuum Pump. Capable of evacuating to an absolute pressure of 10 mm Hg.

2.2 Condensate Recovery Apparatus. The system for the recovery of the organics captured in the condensate trap consists of a heat source, oxidation catalyst, nondispersive infrared (NDIR) analyzer and an intermediate collection vessel (ICV). Figure 25–4 is a schematic of a typical system. The system shall be capable of proper oxidation and recovery, as specified in Section 5.1. The following major components are required:

2.2.1 Heat Source. Sufficient to heat the condensate trap (including connecting tubing) to a temperature of 200 °C. A system using both a heat gun and an electric tube furnace is recommended.

2.2.2 Heat Tape. Sufficient to heat the connecting tubing between the water trap and the oxidation catalyst to 100 °C.

2.2.3 Oxidation Catalyst. A suitable length of 9.5-mm (⅜-in.) OD Inconel 600 tubing packed with 15 cm (6 in.) of 3.2-mm (⅛-1n.) diameter 19 percent chromia on alumina pellets. The catalyst material is packed in the center of the catalyst tube with quartz wool packed on either end to hold it in place. The catalyst tube shall be mounted vertically in a 650 °C tube furnace.

2.2.4 Water Trap. Leak proof, capable of removing moisture from the gas stream

2.2.5 Syringe Port. A 6.4-mm (¼-in.) OD stainless steel tee fitting with a rubber septum placed in the side arm.

2.2.6 NDIR Detector. Capable of indicating CO_2 concentration in the range of zero to 5

percent, to monitor the progress of combustion of the organic compounds from the condensate trap.

2.2.7 Flow-Control Valve. Stainless steel, to maintain the trap conditioning system near atmospheric pressure.

2.2.8 Intermediate Collection Vessel. Stainless steel or aluminum, equipped with a female quick connect. Tanks with nominal volumes of at least 6 liters are recommended.

2.2.9 Mercury Manometer or Absolute Pressure Gauge. Capable of measuring pressure to within 1 mm Hg in the range of 0 to 900 mm.

2.2.10 Syringe. 10-ml gas-tight, glass syringe equipped with an appropriate needle.

2.3 NMO Analyzer. The NMO analyzer is a gas chromatograph (GC) with backflush capability for NMO analysis and is equipped with an oxidation catalyst, reduction catalyst, and FID. Figures 25–5 and 25–6 are schematics of a typical NMO analyzer. This semicontinuous GC/FID analyzer shall be capable of: (1) Separating CO, CO_2, and CH_4 from NMO, (2) reducing the CO_2 to CH_4 and quantifying as CH_4, and (3) oxidizing the NMO to CO_2, reducing the CO_2 to CH_4 and quantifying as CH_4, according to Section 5.2. The analyzer consists of the following major components:

2.3.1 Oxidation Catalyst. A suitable length of 9.5-mm (⅜-in.) OD Inconel 600 tubing packed with 5.1 cm (2 in.) of 19 percent chromia on 3.2-mm (⅛-in.) alumina pellets. The catalyst material is packed in the center of the tube supported on either side by quartz wool. The catalyst tube must be mounted vertically in a 650 °C furnace.

2.3.2 Reduction Catalyst. A 7.6-cm (3-in.) length of 6.4-mm (¼-in.) OD Inconel tubing fully packed with 100-mesh pure nickel powder. The catalyst tube must be mounted vertically in a 400 °C furnace.

2.3.3 Separation Column(s). A 30-cm (1-ft) length of 3.2-mm (⅛-in.) OD stainless steel tubing packed with 60/80 mesh Unibeads 1S followed by a 61-cm (2-ft) length of 3.2-mm (⅛-in.) OD stainless steel tubing packed with 60/80 mesh Carbosieve G. The Carbosieve and Unibeads columns must be baked separately at 200 °C with carrier gas flowing through them for 24 hours before initial use.

2.3.4 Sample Injection System. A 10-port GC sample injection valve fitted with a sample loop properly sized to interface with the NMO analyzer (1-cc loop recommended).

2.3.5 FID. An FID meeting the following specifications is required:

2.3.5.1 Linearity. A linear response (±5 percent) over the operating range as demonstrated by the procedures established in Section 5.2.3.

2.3.5.2 Range. A full scale range of 10 to 50,000 ppm CH_4. Signal attenuators shall be available to produce a minimum signal response of 10 percent of full scale.

2.3.6 Data Recording System. Analog strip chart recorder or digital integration system compatible with the FID for permanently recording the analytical results.

2.4 Other Analysis Apparatus.

2.4.1 Barometer. Mercury, aneroid, or other barometer capable of measuring atmospheric pressure to within 1 mm Hg.

2.4.2 Thermometer. Capable of measuring the laboratory temperature to within 1 °C.

2.4.3 Vacuum Pump. Capable of evacuating to an absolute pressure of 10 mm Hg.

2.4.4 Syringes. 10-µl and 50-µl liquid injection syringes.

2.4.5 Liquid Sample Injection Unit. 316 SS U-tube fitted with an injection septum, see Figure 25–7.

3. Reagents

3.1 Sampling. The following are required for sampling:

3.1.1 Crushed Dry Ice.

3.1.2 Coarse Quartz Wool. 8 to 15 µm.

3.1.3 Filters. Glass fiber filters, without organic binder.

3.2 NMO Analysis. The following gases are needed:

3.2.1 Carrier Gases. Zero grade helium (He) and oxygen (O_2 containing less than 1 ppm CO_2 and less than 0.1 ppm C as hydrocarbon.

3.2.2 Fuel Gas. Zero grade hydrogen (H_2), 99.999 percent pure.

3.2.3 Combustion Gas. Zero grade air or O_2 as required by the detector.

3.3 Condensate Analysis. The following gases are needed:

3.3.1 Carrier Gas. Zero grade air, containing less than 1 ppm C.

3.3.2 Auxiliary O_2. Zero grade O_2, containing less than 1 ppm C.

3.3.3 Hexane. ACS grade, for liquid injection.

3.3.4 Decane. ACS grade, for liquid injection.

3.4 Calibration. For all calibration gases, the manufacturer must recommend a maximum shelf life for each cylinder (i.e., the length of time the gas concentration is not expected to change more than ±5 percent from its certified value). The date of gas cylinder preparation, certified organic concentration, and recommended maximum shelf life must be affixed to each cylinder before shipment from the gas manufacturer to the buyer. The following calibration gases are required:

3.4.1 Oxidation Catalyst Efficiency Check Calibration Gas. Gas mixture standard with nominal concentration of 1 percent methane in air.

3.4.2 FID Linearity and NMO Calibration Gases. Three gas mixture standards with nominal propane concentrations of 20 ppm, 200 ppm, and 3000 ppm, in air.

3.4.3 CO_2 Calibration Gases. Three gas mixture standards with nominal CO_2 concentrations of 50 ppm, 500 ppm, and 1 percent, in air.

NOTE.— Total NMO of less than 1 ppm required for 1 percent mixture.

3.4.4 NMO Analyzer System Check Calibration Gases. Four calibration gases are needed as follows:

3.4.4.1 Propane Mixture. Gas mixture standard containing (nominal) 50 ppm CO, 50 ppm CH_4, 2 percent CO_2, and 20 ppm C_3H_8, prepared in air.

3.4.4.2 Hexane. Gas mixture standard containing (nominal) 50 ppm hexane in air.

3.4.4.3 Toluene. Gas mixture standard containing (nominal) 20 ppm toluene in air.

3.4.4.4 Methanol. Gas mixture standard containing (nominal) 100 ppm methanol in air.

4. Procedure

4.1 Sampling.

4.1.1 Cleaning Sampling Equipment. Before its initial use and after each subsequent use, a condensate trap should be thoroughly cleaned and checked to ensure that it is not contaminated. Both cleaning and checking can be accomplished by installing the trap in the condensate recovery system and treating it as if it were a sample. The trap should be heated as described in the final paragraph of Section 4.3.3. A trap may be considered clean when the CO_2 concentration in its effluent gas drops below 10 ppm. This check is optional for traps that have been used to collect samples which were then recovered according to the procedure in Section 4.3.3.

4.1.2 Sample Tank Evacuation and Leak Check. Evacuate the sample tank to 10 mm Hg absolute pressure or less. Then close the sample tank valve, and allow the tank to sit for 60 minutes. The tank is acceptable if no change in tank vacuum is noted. The evacuation and leak check may be conducted either in the laboratory or the field. The results of the leak check should be included in the test report.

4.1.3 Sample Train Assembly. Just before assembly, measure the tank vacuum using a mercury U-tube manometer or absolute pressure gauge. Record this vacuum, the ambient temperature, and the barometric pressure at this time. Close the sample tank valve and assemble the sampling system as shown in Figure 25–1. Immerse the condensate trap body in dry ice. The point where the inlet tube joins the trap body should be 2.5 to 5 cm above the top of the dry ice.

4.1.4 Pretest Leak Check. A pretest leak check is required. Calculate or measure the approximate volume of the sampling train from the probe trip to the sample tank valve. After assembling the sampling train, plug the probe tip, and make certain that the sample tank valve is closed. Turn on the vacuum pump, and evacuate the sampling system from the probe tip to the sample tank valve to an absolute pressure of 10 ppm Hg or less. Close the purge valve, turn off the pump, wait a minimum period of 5 minutes, and recheck the indicated vacuum. Calculate the maximum allowable pressure change based on a leak rate of 1 percent of the sampling rate using Equation 25–1, Section 6.2. If the measured pressure change exceeds the calculated limit, correct the problem before beginning sampling. The results of the leak check should be included in the test report.

4.1.5 Sample Train Operation. Unplug the probe tip, and place the probe into the stack such that the probe is perpendicular to the duct or stack axis; locate the probe tip at a single preselected point of average velocity facing away from the direction of gas flow. For stacks having a negative static pressure, seal the sample port sufficiently to prevent air in-leakage around the probe. Set the probe temperature controller to 129 °C (265 °F) and the filter temperature controller to 121 °C (250 °F). Allow the probe and filter to heat for about 30 minutes before purging the sample train.

Close the sample valve, open the purge valve, and start the vacuum pump. Set the flow rate between 60 and 100 cc/min, and purge the train with stack gas for at least 10 minutes. When the temperatures at the exit ends of the probe and filter are within their specified range, sampling may begin.

Check the dry ice level around the condensate trap, and add dry ice if necessary. Record the clock time. To begin sampling, close the purge valve and stop the pump. Open the sample valve and the sample tank valve. Using the flow control valve, set the flow through the sample train to the proper rate. Adjust the flow rate as necessary to maintain a constant rate (±10 percent) throughout the duration of the sampling period. Record the sample tank vacuum and flowmeter setting at 5-minute intervals. (See Figure 25–8.) Select a total sample time greater than or equal to the minimum sampling time specified in the applicable subpart of the regulation; end the sampling when this time period is reached or when a constant flow rate can no longer be maintained because of reduced sample tank vacuum.

NOTE: If sampling had to be stopped before obtaining the minimum sampling time (specified in the applicable subpart) because a constant flow rate could not be maintained, proceed as follows: After closing the sample tank valve, remove the used sample tank from the sampling train (without disconnecting other portions of the sampling train). Take another evacuated and leak-checked sample tank, measure and record the tank vacuum, and attach the new tank to the sampling train. After the new tank is attached to the sample train, proceed with the sampling until the required minimum sampling time has been exceeded.

4.2 Sample Recovery. After sampling is completed, close the flow control valve, and record the final tank vacuum; then record the tank temperature and barometric pressure. Close the sample tank valve, and disconnect the sample tank from the sample system. Disconnect the condensate trap at the flowmetering system, and tightly seal both ends of the condensate trap. Do not include the probe from the stack to the filter as part of the condensate sample. Keep the trap packed in dry ice until the samples are returned to the laboratory for analysis. Ensure that the test run number is properly identified on the condensate trap and the sample tank(s).

4.3 Condensate Recovery. See Figure 25–9. Set the carrier gas flow rate, and heat the catalyst to its operating temperature to condition the apparatus.

4.3.1 Daily Performance Checks. Each day before analyzing any samples, perform the following tests:

4.3.1.1 Leak Check. With the carrier gas inlets and the flow control valve closed, install a clean condensate trap in the system, and evacuate the system to 10 mm Hg absolute pressure or less. Close the vacuum pump valve and turn off the vacuum pump. Monitor the system pressure for 10 minutes. The system is acceptable if the pressure change is less than 2 mm Hg.

4.3.1.2 System Background Test. Adjust the carrier gas and auxiliary oxygen flow rate to their normal values of 100 cc/min and 150 cc/min, respectively, with the sample recovery valve in vent position. Using a 10-ml syringe withdraw a sample from the system effluent through the syringe port. Inject this sample into the NMO analyzer, and measure the CO_2 content. The system background is acceptable if the CO_2 concentration is less than 10 ppm.

4.3.1.3 Oxidation Catalyst Efficiency Check. Conduct a catalyst efficiency test as specified in Section 5.1.2 of this method. If the criterion of this test cannot be met, make the necessary repairs to the system before proceeding.

4.3.2 Condensate Trap CO_2 Purge and Sample Tank Pressurization. After sampling is completed, the condensate trap will contain condensed water and organics and a small volume of sampled gas. This gas from the stack may contain a significant amount of CO_2 which must be removed from the condensate trap before the sample is recovered. This is accomplished by purging the condensate trap with zero air and collecting the purged gas in the original sample tank.

Begin with the sample tank and condensate trap from the test run to be analyzed. Set the four-port valve of the condensate recovery system in the CO_2 purge position as shown in Figure 25–9. With the sample tank valve closed, attach the sample tank to the sample recovery system. With the sample recovery valve in the vent position and the flow control valve fully open, evacuate the manometer or pressure gauge to the vacuum of the sample tank. Next, close the vacuum pump valve, open the sample tank valve, and record the tank pressure.

Attach the dry-ice-cooled condensate trap to the recovery system, and initiate the purge by switching the sample recovery valve from vent to collect position. Adjust the flow control valve to maintain atmospheric pressure in the recovery system. Continue the purge until the CO_2 concentration of the trap effluent is less than 5 ppm. CO_2 concentration in the trap effluent should be measured by extracting syringe samples from the recovery system and analyzing the samples with the NMO analyzer. This procedure should be used only after the NDIR response has reached a minimum level. Using a 10-ml syringe, extract a sample from the syringe port prior to the NDIR, and inject this sample into the NMO analyzer.

After the completion of the CO_2 purge, use the carrier gas bypass valve to pressurize the sample tank to approximately 1060 mm Hg absolute pressure with zero air.

4.3.3 Recovery of the Condensate Trap Sample. See Figure 25–10. Attach the ICV to the sample recovery system. With the sample recovery valve in a closed position, between vent and collect, and the flow control and ICV valves fully open, evacuate the manometer or gauge, the connecting tubing, and the ICV to 10 mm Hg absolute pressure. Close the flow-control and vacuum pump valves.

Begin auxiliary oxygen flow to the oxidation catalyst at a rate of 150 cc/min, then switch the four-way valve to the trap recovery position and the sample recovery valve to collect position. The system should now be set up to operate as indicated in Figure 25–10. After the manometer or pressure gauge begins to register a slight positive pressure, open the flow control valve. Adjust the flow-control valve to maintain atmospheric pressure in the system within 10 percent.

Now, remove the condensate trap from the dry ice, and allow it to warm to ambient temperature while monitoring the NDIR response. If after 5 minutes, the CO_2 concentration of the catalyst effluent is below 10,000 ppm, discontinue the auxiliary oxygen flow to the oxidation catalyst. Begin heating the trap by placing it in a furnace preheated to 200 °C. Once heating has begun, carefully monitor the NDIR response to ensure that the catalyst effluent concentration does not exceed 50,000 ppm. Whenever the CO_2 concentration exceeds 50,000 ppm, supply auxiliary oxygen to the catalyst at the rate of 150 cc/min. Begin heating the tubing that connected the heated sample box to the condensate trap only after the CO_2 concentration falls below 10,000 ppm. This tubing may be heated in the same oven as the condensate

trap or with an auxiliary heat source such as a heat gun. Heating temperature must not exceed 200 °C. If a heat gun is used, heat the tubing slowly along its entire length from the upstream end to the downstream end, and repeat the pattern for a total of three times. Continue the recovery until the CO_2 concentration drops to less than 10 ppm as determined by syringe injection as described under the condensate trap CO_2 purge Procedure, Section 4.3.2.

After the sample recovery is completed, use the carrier gas bypass valve to pressurize the ICV to approximately 1060 mm Hg absolute pressure with zero air.

4.4 Analysis. Before putting the NMO analyzer into routine operation, conduct an initial performance test. Start the analyzer, and perform all the necessary functions in order to put the analyzer into proper working order; then conduct the performance test according to the procedures established in Section 5.2. Once the performance test has been successfully completed and the CO_2 and NMO calibration response factors have been determined, proceed with sample analysis as follows:

4.4.1 Daily Operations and Calibration Checks. Before and immediately after the analysis of each set of samples or on a daily basis (whichever occurs first), conduct a calibration test according to the procedures established in Section 5.3. If the criteria of the daily calibration test cannot be met, repeat the NMO analyzer performance test (Section 5.2) before proceeding.

4.4.2 Operating Conditions. The carrier gas flow rate is 29.5 cc/min He and 2.2 cc/min O_2. The column oven is heated to 85 °C. The order of elution for the sample from the column is CO, CH_4, CO_2, and NMO.

4.4.3 Analysis of Recovered Condensate Sample. Purge the sample loop with sample, and then inject the sample. Under the specified operating conditions, the CO_2 in the sample will elute in approximately 100 seconds. As soon as the detector response returns to baseline following the CO_2 peak, switch the carrier gas flow to backflush, and raise the column oven temperature to 195 °C as rapidly as possible. A rate of 30 °C/min has been shown to be adequate. Record the value obtained for the condensible organic material (C_{cm}) measured as CO_2 and any measured NMO. Return the column oven temperature to 85 °C in preparation for the next analysis. Analyze each sample in triplicate, and report the average C_{cm}.

4.4.4 Analysis of Sample Tank. Perform the analysis as described in Section 4.4.3, but record only the value measured for NMO (C_{tm}).

4.5 Audit Samples. Analyze a set of two audit samples concurrently with any compliance samples and in exactly the same manner to evaluate the analyst's technique and the instrument calibration. The same analysts, analytical reagents, and analytical system shall be used for the compliance samples and the EPA audit samples; if this condition is met, auditing of subsequent compliance analyses for the same enforcement agency within 30 days is not required. An audit sample set may not be used to validate different sets of compliance samples under the jurisdiction of different enforcement agencies, unless prior arrangements are made with both enforcement agencies.

Calculate the concentrations of the audit samples in ppm using the specified sample volume in the audit instructions. (NOTE.—Indication of acceptable results may be obtained immediately by reporting the audit results in ppm and compliance results in ppm by telephone to the responsible enforcement agency.) Include the results of both audit samples, their identification numbers, and the analyst's name with the results of the compliance determination samples in appropriate reports to the EPA regional office or the appropriate enforcement agency during the 30-day period.

The concentration of the audit samples obtained by the analyst shall agree within 20 percent of the actual concentrations. Failure to meet the 20-percent specification may require retests until the audit problems are resolved. However, if the audit results do not affect the compliance or noncompliance status of the affected facility, the Administrator may waive the reanalysis requirement, further audits, or retests and accept the results of the compliance test. While steps are being taken to resolve audit analysis problems, the Administrator may also choose to use the data to determine the compliance or noncompliance of the affected facility.

5. Calibration and Operational Checks

Maintain a record of performance of each item.

5.1 Initial Performance Check of Condensate Recovery Apparatus. Perform these tests before the system is first placed in operation, after any shutdown of 6 months or more, and after any major modification of the system, or at the specified frequency.

5.1.1 Carrier Gas and Auxiliary O_2 Blank Check. Analyze each new tank of carrier gas or auxiliary O_2 with the NMO analyzer to check for contamination. Treat the gas cylinders as noncondensible gas samples, and analyze according to the procedure in Section 4.4.3. Add together any measured CH_4, CO, CO_2, or NMO. The total concentration must be less than 5 ppm.

5.1.2 Catalyst Efficiency Check. With a clean condensate trap installed in the recovery system, replace the carrier gas cylinder with the high level methane standard gas cylinder (Section 3.4.1). Set the four-port valve to the recovery position, and attach an ICV to the recovery system. With the sample

recovery valve in vent position and the flow-control and ICV valves fully open, evacuate the manometer or gauge, the connecting tubing, and the ICV to 10 mm Hg absolute pressure. Close the flow-control and vacuum pump valves.

After the NDIR response has stabilized, switch the sample recovery valve from vent to collect. When the manometer or pressure gauge begins to register a slight positive pressure, open the flow-control valve. Keep the flow adjusted so that atmospheric pressure is maintained in the system within 10 percent. Continue collecting the sample in a normal manner until the ICV is filled to a nominal gauge pressure of 300 mm Hg. Close the ICV valve, and remove the ICV from the system. Place the sample recovery valve in the vent position, and return the recovery system to its normal carrier gas and normal operating conditions. Analyze the ICV for CO_2 using the NMO analyzer; the catalyst efficiency is acceptable if the CO_2 concentration is within 2 percent of the methane standard concentration.

5.1.3 System Performance Check. Construct a liquid sample injection unit similar in design to the unit shown in Figure 25–7. Insert this unit into the condensate recovery and conditioning system in place of a condensate trap, and set the carrier gas and auxiliary O_2 flow rates to normal operating levels. Attach an evacuated ICV to the system, and switch from system vent to collect. With the carrier gas routed through the injection unit and the oxidation catalyst, inject a liquid sample (See Sections 5.1.3.1 to 5.1.3.4) into the injection port. Operate the trap recovery system as described in Section 4.3.3. Measure the final ICV pressure, and then analyze the vessel to determine the CO_2 concentration. For each injection, calculate the percent recovery using the equation in Section 6.6.

The performance test is acceptable if the average percent recovery is 100±10 percent with a relative standard deviation (Section 6.9) of less than 5 percent for each set of triplicate injections as follows:

5.1.3.1 50 µl Hexane.

5.1.3.2 10 µl Hexane.

5.1.3.3 50 µl Decane.

5.1.3.4 10 µl Decane.

5.2 Initial NMO Analyzer Performance Test. Perform these tests before the system is first placed in operation, after any shutdown longer than 6 months, and after any major modification of the system.

5.2.1 Oxidation Catalyst Efficiency Check. Turn off or bypass the NMO analyzer reduction catalyst. Make triplicate injections of the high level methane standard (Section 3.4.1). The oxidation catalyst operation is acceptable if the FID response is less than 1 percent of the injected methane concentration.

5.2.2 Reduction Catalyst Efficiency Check. With the oxidation catalyst unheated or bypassed and the heated reduction catalyst bypassed, make triplicate injections of the high level methane standard (Section 3.4.1). Repeat this procedure with both catalysts operative. The reduction catalyst operation is acceptable if the response under both conditions agree within 5 percent.

5.2.3 Analyzer Linearity Check and NMO Calibration. While operating both the oxidation and reduction catalysts, conduct a linearity check of the analyzer using the propane standards specified in Section 3.4.2. Make triplicate injections of each calibration gas, and then calculate the average response factor (area/ppm C) for each gas, as well as the overall mean of the response factor values. The instrument linearity is acceptable if the average response factor of each calibration gas is within 2.5 percent of the overall mean value and if the relative standard deviation (Section 6.9) for each set of triplicate injections is less than 2 percent. Record the overall mean of the propane response factor values as the NMO calibration response factor (RF_{NMO}).

Repeat the linearity check using the CO_2 standards specified in Section 3.4.3. Make triplicate injections of each gas, and then calculate the average response factor (area/ppm C) for each gas, as well as the overall mean of the response factor values. Record the overall mean of the response factor values as the CO_2 calibration response factor (RF_{CO2}). Linearity is acceptable if the average response factor of each calibration gas is within 2.5 percent of the overall mean value and if the relative standard deviation for each set of triplicate injections is less than 2 percent. The RF_{CO2} must be witnin 10 percent of the RF_{NMO}.

5.2.4 System Peformance Check. Check the column separation and overall performance of the analyzer by making triplicate injections of the calibration gases listed in Section 3.4.4. The analyzer performance is acceptable if the measured NMO value for each gas (average of triplicate injections) is within 5 percent of the expected value.

5.3 NMO Analyzer Daily Calibration.

5.3.1 CO_2 Response Factor. Inject triplicate samples of the high level CO_2 calibration gas (Section 3.4.3), and calculate the average response factor. The system operation is adequate if the calculated response factor is within 5 percent of the RF_{CO2} calculated during the initial performance test (Section 5.2.3). Use the daily response factor (DRF_{CO2}) for analyzer calibration and the calculation of measured CO_2 concentrations in the ICV samples.

5.3.2 NMO Response Factors. Inject triplicate samples of the mixed propane calibration cylinder (Section 3.4.4.1), and calculate the average NMO response factor. The system operation is adequate if the calculated

response factor is within 5 percent of the RF_{NMO} calculated during the initial performance test (Section 5.2.4). Use the daily response factor (DRF_{NMO}) for analyzer calibration and calculation of NMO concentrations in the sample tanks.

5.4 Sample Tank and ICV Volume. The volume of the gas sampling tanks used must be determined. Determine the tank and ICV volumes by weighing them empty and then filled with deionized distilled water; weigh to the nearest 5 g, and record the results. Alternatively, measure the volume of water used to fill them to the nearest 5 ml.

6. Calculations

All equations are written using absolute pressure; absolute pressures are determined by adding the measured barometric pressure to the measured gauge or manometer pressure.

6.1 Nomenclature.

C=TGNMO concentration of the effluent, ppm C equivalent.
C_c=Calculated condensible organic (condensate trap) concentration of the effluent, ppm C equivalent.
C_{cm}=Measured concentration (NMO analyzer) for the condensate trap ICV, ppm CO_2.
C_t=Calculated noncondensible organic concentration (sample tank) of the effluent, ppm C equivalent.
C_{tm}=Measured concentration (NMO analyzer) for the sample tank, ppm NMO.
F=Sampling flow rate, cc/min.
L=Volume of liquid injected, µl.
M=Molecular weight of the liquid injected, g/g-mole.
m_C=TGNMO mass concentration of the effluent, mg C/dsm^3.
N=Carbon number of the liquid compound injected (N=12 for decane, N=6 for hexane).
P_f=Final pressure of the intermediate collection vessel, mm Hg absolute.
P_b=Barometric pressure, cm Hg.
P_{ti}=Gas sample tank pressure before sampling, mm Hg absolute.
P_t=Gas sample tank pressure after sampling, but before pressurizing, mm Hg absolute.
P_{tf}=Final gas sample tank pressure after pressurizing, mm Hg absolute.
T_f=Final temperature of intermediate collection vessel, °K.
T_{ti}=Sample tank temperature before sampling, °K.
T_t=Sample tank temperature at completion of sampling, °K.
T_{tf}=Sample tank temperature after pressurizing, °K.
V=Sample tank volume, m^3.
V_t=Sample train volume, cc.
V_v=Intermediate collection vessel volume, m^3.
V_s=Gas volume sampled, dsm^3.
n=Number of data points.
q=Total number of analyzer injections of intermediate collection vessel during analysis (where k=injection number, 1 . . . q).
r=Total number of analyzer injections of sample tank during analysis (where j=injection number, 1 . . . r).
x_i=Individual measurements.
x=Mean value.
ρ=Density of liquid injected, g/cc.
Θ=Leak check period, min.
ΔP=Allowable pressure change, cm Hg.

6.2 Allowable Pressure Change. For the pretest leak check, calculate the allowable pressure change:

$$\Delta P = 0.01 \frac{FP_b\theta}{V_t} \qquad \text{Eq. 25-1}$$

6.3 Sample Volume. For each test run, calculate the gas volume sampled:

$$V_s = 0.3857\ V \left[\frac{P_t}{T_t} - \frac{P_{ti}}{T_{ti}} \right] \qquad \text{Eq. 25-2}$$

6.4 Noncondensible Organics. For each sample tank, determine the concentration of nonmethane organics (ppm C):

$$C_t = \left[\frac{\frac{P_{tf}}{T_{tf}}}{\frac{P_t}{T_t} - \frac{P_{ti}}{T_{ti}}} \right] \left[\frac{1}{r} \sum_{j=1}^{r} C_{tm_j} \right] \qquad \text{Eq. 25-3}$$

6.5 Condensible Organics. For each condensate trap determine the concentration of organics (ppm C):

$$C_c = 0.3857 \frac{V_v P_f}{V_s T_f} \left[\frac{1}{q} \sum_{k=1}^{q} C_{cm_k} \right]$$

Eq. 25-4

6.6 TGNMO. To determine the TGNMO concentration for each test run, use the following equation:

$C=C_t+C_c$

Eq. 25–5

6.7 TGNMO Mass Concentration. To determine the TGNMO mass concentration as carbon for each test run, use the following equation:

$m_c=0.4993\ C$

Eq. 25–6

6.8 Percent Recovery. To calculate the percent recovery for the liquid injections to the condensate recovery and conditioning system use the following equation.

$$\text{Percent recovery} = 1.604 \frac{M}{L} \frac{V_v}{P} \frac{P_t}{T_f} \frac{C_{cm}}{N} \qquad \text{Eq. 25-7}$$

6.9 Relative Standard Deviation.

$$RSD = \frac{100}{\bar{x}} \sqrt{\frac{\Sigma (x_i - \bar{x})^2}{n - 1}}$$

Eq. 25-8

7. Bibliography

1. Salo, Albert E., Samuel Witz, and Robert D. MacPhee. Determination of Solvent Vapor Concentrations by Total Combustion Analysis: A Comparison of Infrared with Flame Ionization Detectors. Paper No. 75–33.2. (Presented at the 68th Annual Meeting of the Air Pollution Control Association. Boston, Massachusetts. June 15–20, 1975.) 14 p.

2. Salo, Albert E., William L. Oaks, and Robert D. MacPhee. Measuring the Organic Carbon Content of Source Emissions for Air Pollution Control. Paper No. 74–190. (Presented at the 67th Annual Meeting of the Air Pollution Control Association. Denver, Colorado. June 9–13, 1974.) 25 p.

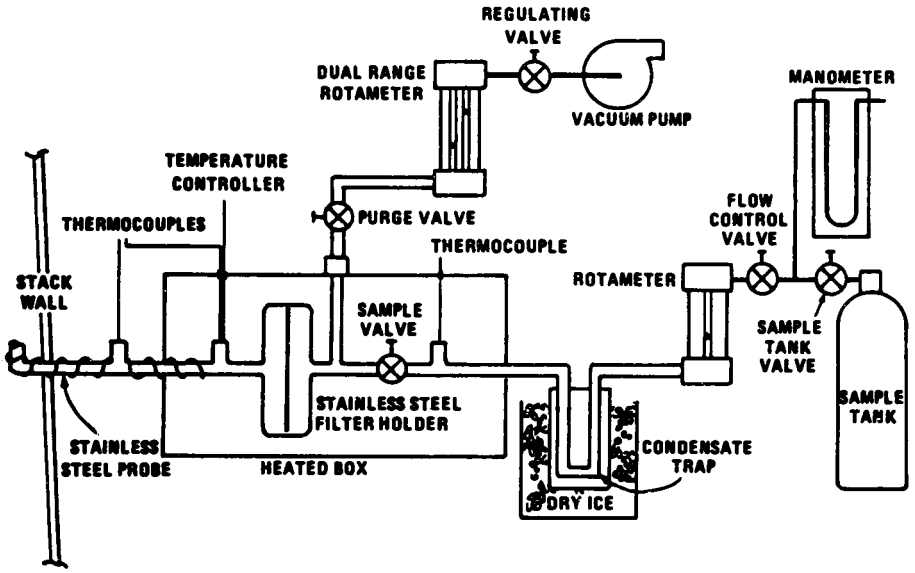

Figure 25-1. Sampling train.

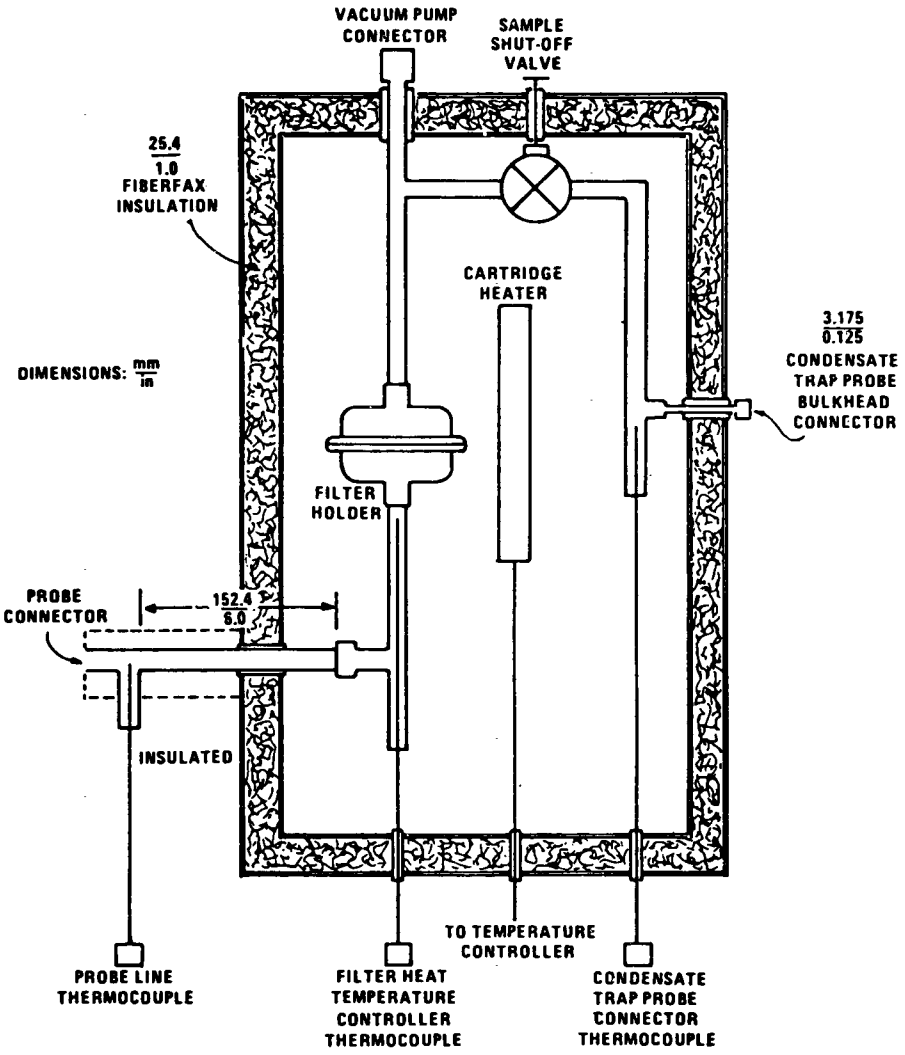

Figure 25-2. Out-of-stack filter box.

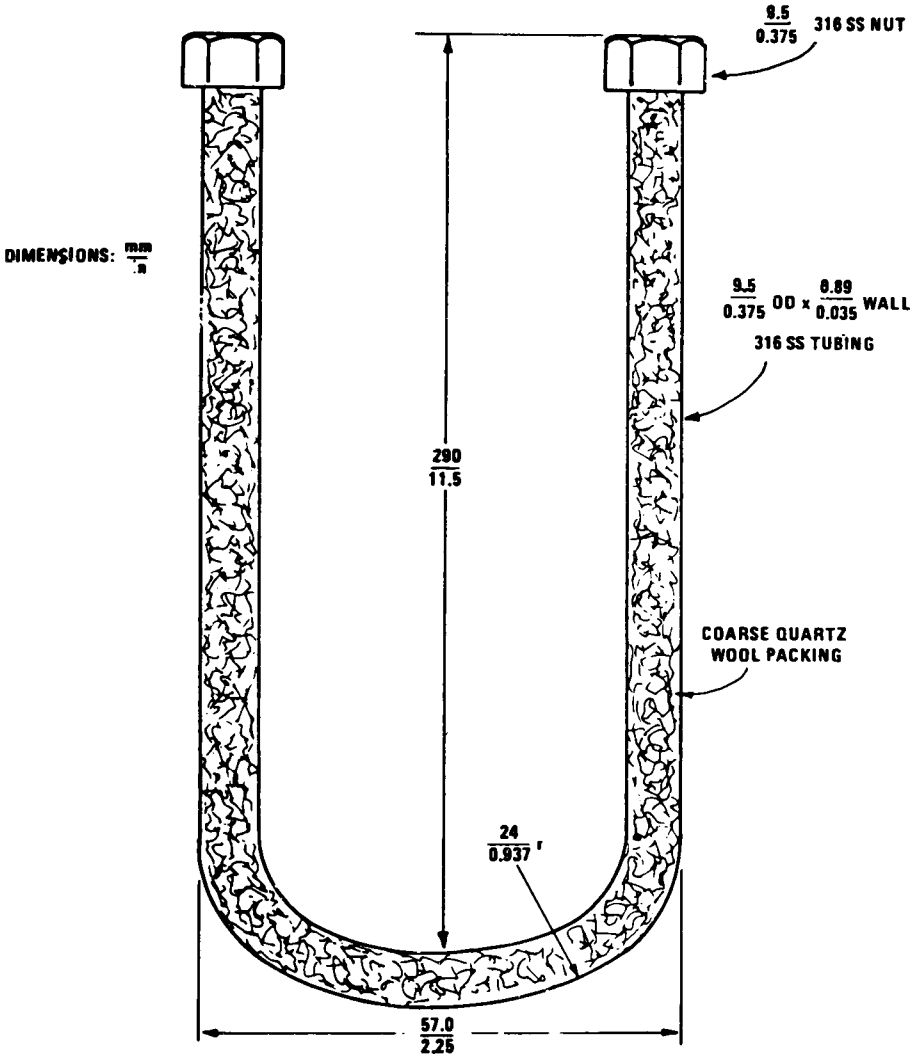

Figure 25-3. Condensate trap.

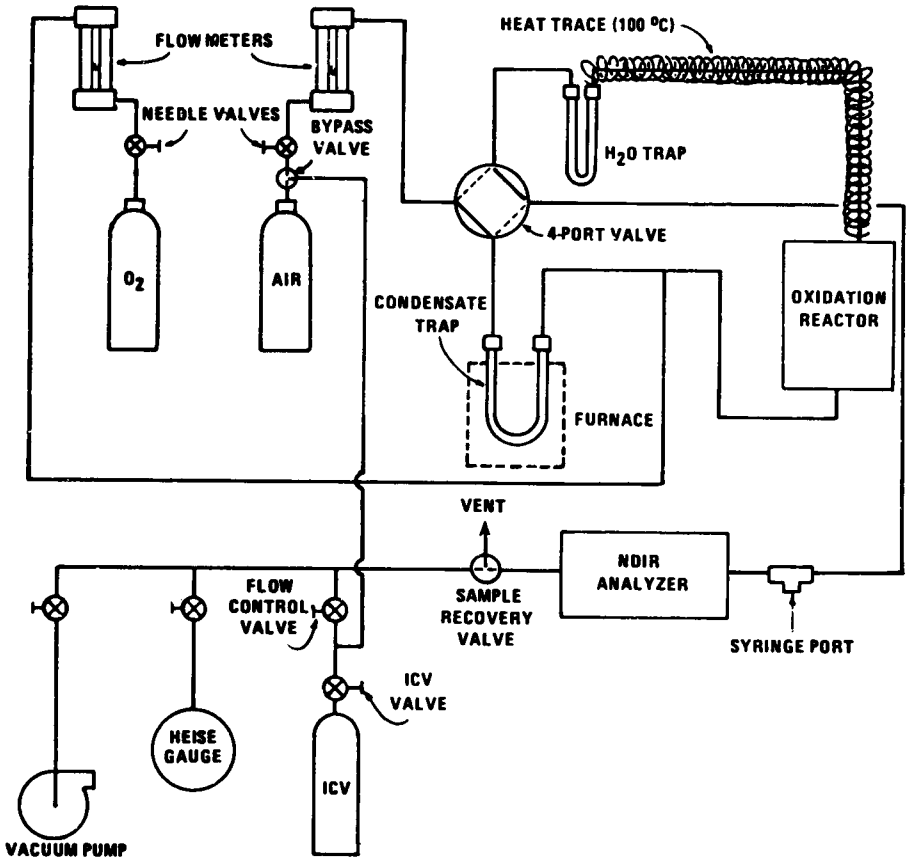

Figure 25-4. Condensate recovery system.

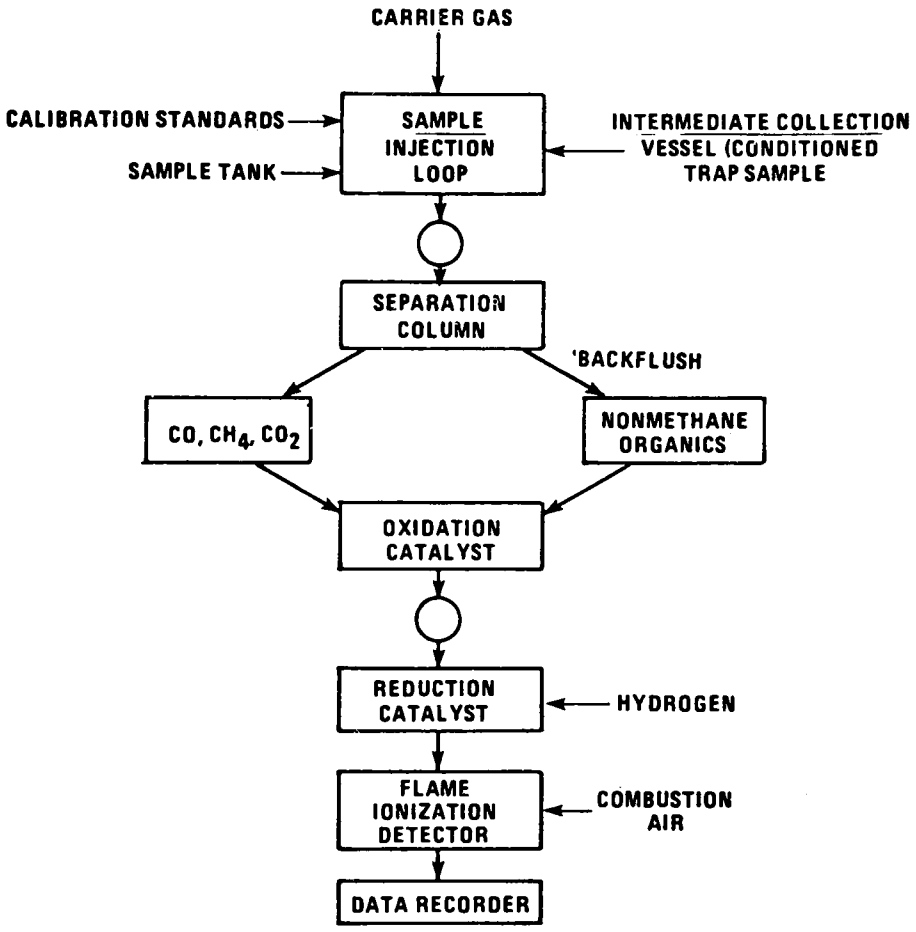

Figure 25-5. Simplified schematic of nonmethane organic (NMO) analyzer.

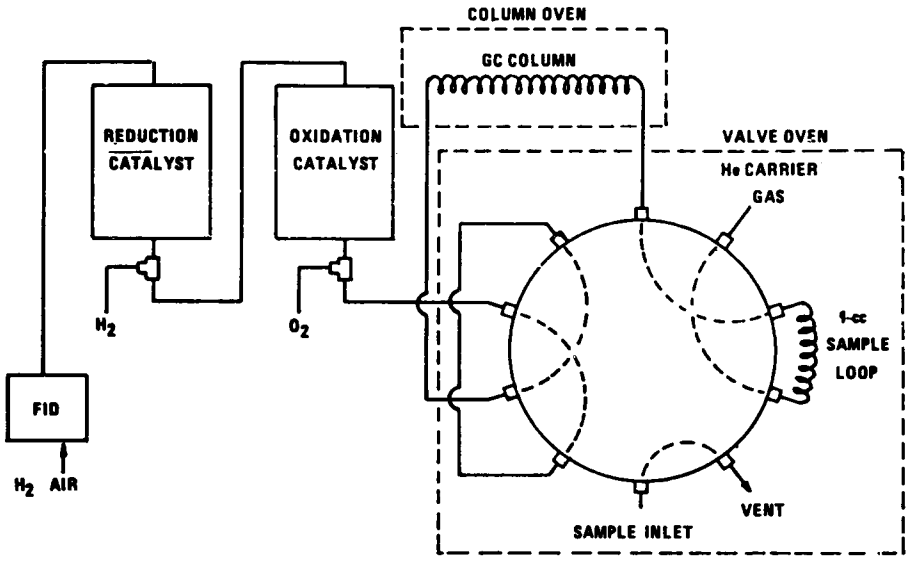

Figure 25-6. Nonmethane organic analyzer (NMO).

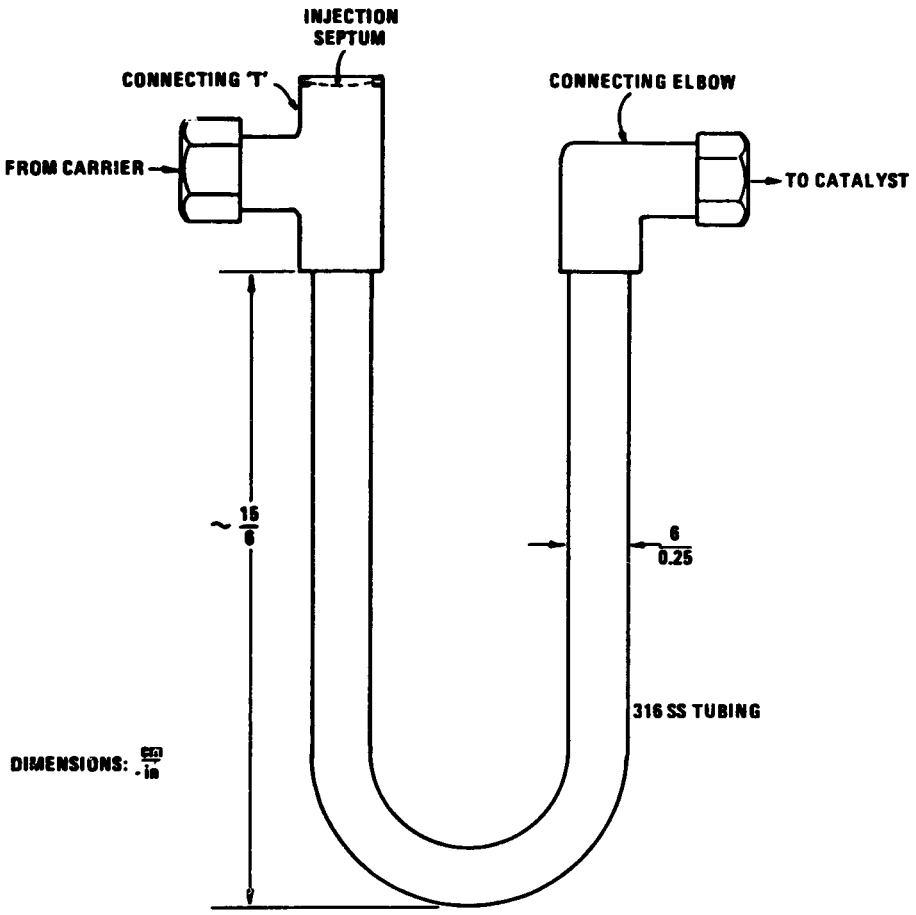

Figure 25-7. Liquid sample injection unit.

VOLATILE ORGANIC CARBON

FACILITY_____ SAMPLE LOCATION_____

LOCATION_____ OPERATOR_____

DATE_____ RUN NUMBER_____

TANK NUMBER_____ TRAP NUMBER_____ SAMPLE ID NUMBER_____

	TANK VACUUM, mm Hg	cm Hg	BAROMETRIC PRESSURE, mm Hg	AMBIENT TEMPERATURE, °C
PRETEST (MANOMETER)		(GAUGE)		
POST TEST (MANOMETER)		(GAUGE)		

LEAK RATE _____ cm Hg / 10 min

PRETEST_____

TIME CLOCK/SAMPLE	VACUUM cm Hg	FLOWMETER SETTING	COMMENTS

Figure 25-8. Example field data form.

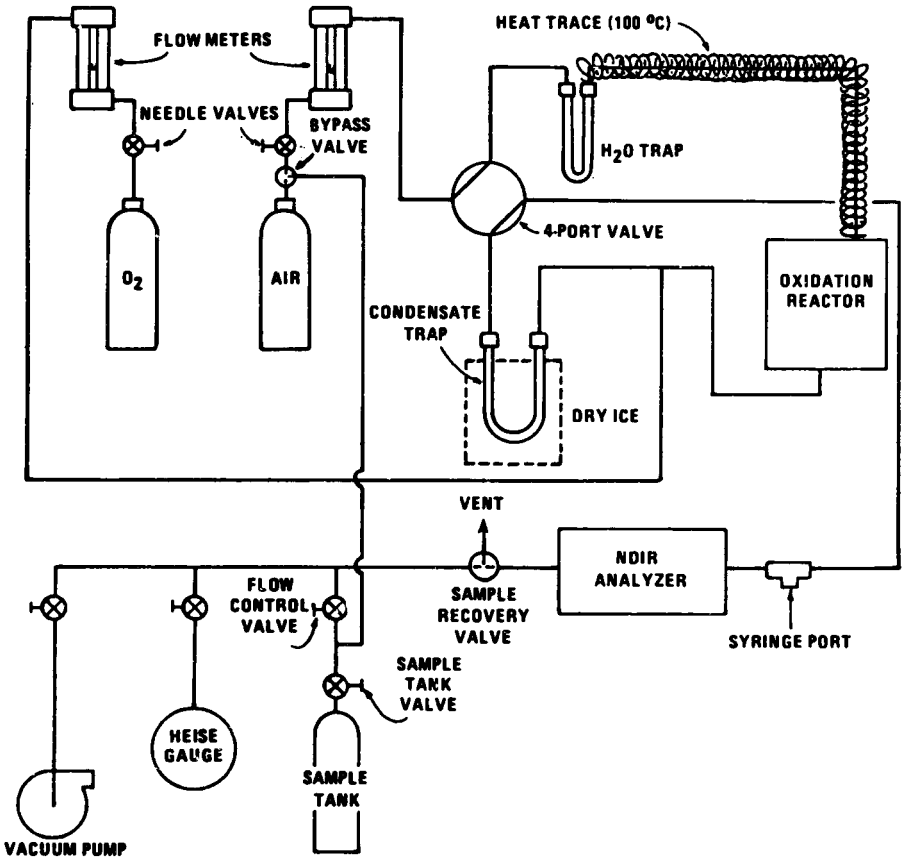

Figure 25-9. Condensate recovery system, CO_2 purge.

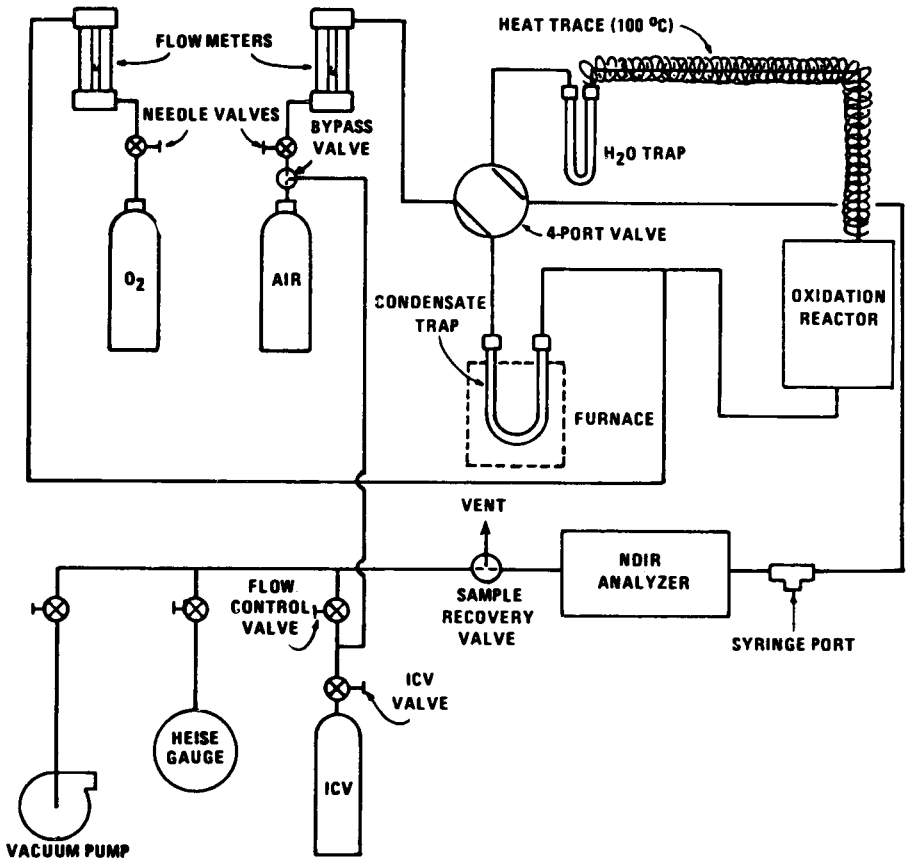

Figure 25-10. Condensate recovery system, collection of trap organics.

METHOD 25A—DETERMINATION OF TOTAL GASEOUS ORGANIC CONCENTRATION USING A FLAME IONIZATION ANALYZER

1. *Applicability and Principle*

1.1 Applicability. This method applies to the measurement of total gaseous organic concentration of vapors consisting primarily of alkanes, alkenes, and/or arenes (aromatic hydrocarbons). The concentration is expressed in terms of propane (or other appropriate organic calibration gas) or in terms of carbon.

1.2 Principle. A gas sample is extracted from the source through a heated sample line, if necessary, and glass fiber filter to a flame ionization analyzer (FIA). Results are reported as volume concentration equivalents of the calibration gas or as carbon equivalents.

2. *Definitions*

2.1 Measurement System. The total equipment required for the determination of the gas concentration. The system consists of the following major subsystems:

2.1.1 Sample Interface. That portion of the system that is used for one or more of the following: sample acquisition, sample transportation, sample conditioning, or protection of the analyzer from the effects of the stack effluent.

2.1.2 Organic Analyzer. That portion of the system that senses organic concentration and generates an output proportional to the gas concentration.

2.2 Span Value. The upper limit of a gas concentration measurement range that is specified for affected source categories in the applicable part of the regulations. The span

value is established in the applicable regulation and is usually 1.5 to 2.5 times the applicable emission limit. If no span value is provided, use a span value equivalent to 1.5 to 2.5 times the expected concentration. For convenience, the span value should correspond to 100 percent of the recorder scale.

2.3 Calibration Gas. A known concentration of a gas in an appropriate diluent gas.

2.4 Zero Drift. The difference in the measurement system response to a zero level calibration gas before and after a stated period of operation during which no unscheduled maintenance, repair, or adjustment took place.

2.5 Calibration Drift. The difference in the measurement system response to a mid-level calibration gas before and after a stated period of operation during which no unscheduled maintenance, repair or adjustment took place.

2.6 Response Time. The time interval from a step change in pollutant concentration at the inlet to the emission measurement system to the time at which 95 percent of the corresponding final value is reached as displayed on the recorder.

2.7 Calibration Error. The difference between the gas concentration indicated by the measurement system and the known concentration of the calibration gas.

3. *Apparatus*

A schematic of an acceptable measurement system is shown in Figure 25A–1. The essential components of the measurement system are described below:

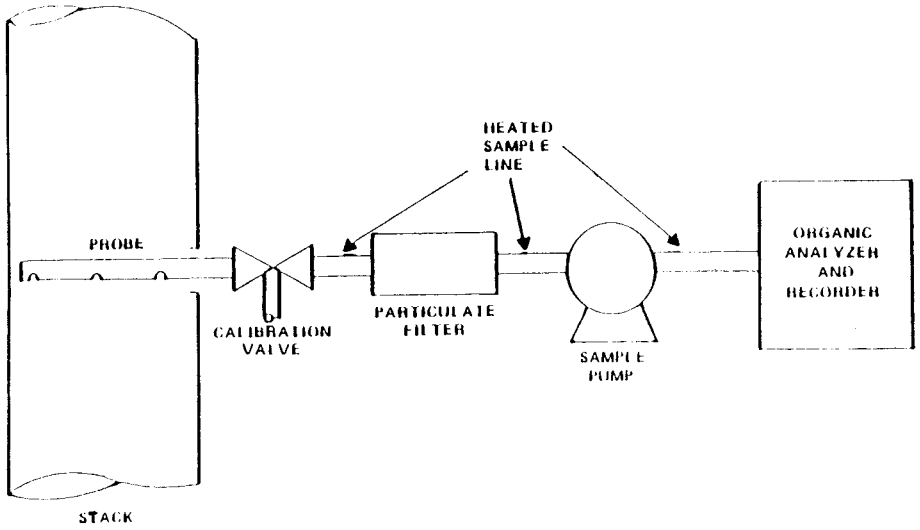

Figure 25A–1 Organic Concentration Measurement System

3.1 Organic Concentration Analyzer. A flame ionization analyzer (FIA) capable of meeting or exceeding the specifications in this method.

3.2 Sample Probe. Stainless steel, or equivalent, three-hole rake type. Sample holes shall be 4 mm in diameter or smaller and located at 16.7, 50, and 83.3 percent of the equivalent stack diameter. Alternatively, a single opening probe may be used so that a gas sample is collected from the centrally located 10 percent area of the stack cross-section.

3.3 Sample Line. Stainless steel or Teflon* tubing to transport the sample gas to the analyzer. The sample line should be heated, if necessary, to prevent condensation in the line.

3.4 Calibration Valve Assembly. A three-way valve assembly to direct the zero and calibration gases to the analyzers is recommended. Other methods, such as quick-connect lines, to route calibration gas to the analyzers are applicable.

*Mention of trade names or specific products does not constitute endorsement by the Environmental Protection Agency.

3.5 Particulate Filter. An in-stack or an out-of-stack glass fiber filter is recommended if exhaust gas particulate loading is significant. An out-of-stack filter should be heated to prevent any condensation.

3.6 Recorder. A strip-chart recorder, analog computer, or digital recorder for recording measurement data. The minimum data recording requirement is one measurement value per minute. Note: This method is often applied in highly explosive areas. Caution and care should be exercised in choice of equipment and installation.

4. *Calibration and Other Gases*

Gases used for calibrations, fuel, and combustion air (if required) are contained in compressed gas cylinders. Preparation of calibration gases shall be done according to the procedure in Protocol No. 1, listed in Citation 2 of Bibliography. Additionally, the manufacturer of the cylinder should provide a recommended shelf life for each calibration gas cylinder over which the concentration does not change more than ±2 percent from the certified value. For calibration gas values not generally available (i.e., organics between 1 and 10 percent by volume), alternative methods for preparing calibration gas mixtures, such as dilution systems, may be used with prior approval of the Administrator.

Calibration gases usually consist of propane in air or nitrogen and are determined in terms of the span value. Organic compounds other than propane can be used following the above guidelines and making the appropriate corrections for response factor.

4.1 Fuel. A 40 percent H_2/60 percent He or 40 percent H_2/60 percent N_2 gas mixture is recommended to avoid an oxygen synergism effect that reportedly occurs when oxygen concentration varies significantly from a mean value.

4.2 Zero Gas. High purity air with less than 0.1 parts per million by volume (ppmv) of organic material (propane or carbon equivalent) or less than 0.1 percent of the span value, whichever is greater.

4.3 Low-level Calibration Gas. An organic calibration gas with a concentration equivalent to 25 to 35 percent of the applicable span value.

4.4 Mid-level Calibration Gas. An organic calibration gas with a concentration equivalent to 45 to 55 percent of the applicable span value.

4.5 High-level Calibration Gas. An organic calibration gas with a concentration equivalent to 80 to 90 percent of the applicable span value.

5. *Measurement System Performance Specifications*

5.1 Zero Drift. Less than ±3 percent of the span value.

5.2 Calibration Drift. Less than ±3 percent of span value.

5.3 Calibration Error. Less than ±5 percent of the calibration gas value.

6. *Pretest Preparations*

6.1 Selection of Sampling Site. The location of the sampling site is generally specified by the applicable regulation or purpose of the test; i.e., exhaust stack, inlet line, etc. The sample port shall be located at least 1.5 meters or 2 equivalent diameters upstream of the gas discharge to the atmosphere.

6.2 Location of Sample Probe. Install the sample probe so that the probe is centrally located in the stack, pipe, or duct and is sealed tightly at the stack port connection.

6.3 Measurement System Preparation. Prior to the emission test, assemble the measurement system following the manufacturer's written instructions in preparing the sample interface and the organic analyzer. Make the system operable.

FIA equipment can be calibrated for almost any range of total organics concentrations. For high concentrations of organics (>1.0 percent by volume as propane) modifications to most commonly available analyzers are necessary. One accepted method of equipment modification is to decrease the size of the sample to the analyzer through the use of a smaller diameter sample capillary. Direct and continuous measurement of organic concentration is a necessary consideration when determining any modification design.

6.4 Calibration Error Test. Immediately prior to the test series, (within 2 hours of the start of the test) introduce zero gas and high-level calibration gas at the calibration valve assembly. Adjust the analyzer output to the appropriate levels, if necessary. Calculate the predicted response for the low-level and mid-level gases based on a linear response line between the zero and high-level responses. Then introduce low-level and mid-level calibration gases successively to the measurement system. Record the analyzer responses for low-level and mid-level calibration gases and determine the differences between the measurement system responses and the predicted responses. These differences must be less than 5 percent of the respective calibration gas value. If not, the measurement system is not acceptable and must be replaced or repaired prior to testing. No adjustments to the measurement system shall be conducted after the calibration and before the drift check (Section 7.3). If adjustments are necessary before the completion of the test series, perform the drift checks prior to the required adjustments and repeat the calibration following the adjustments. If multiple electronic ranges are to be used, each additional range must be checked with a mid-level calibration gas to verify the multiplication factor.

6.5 Response Time Test. Introduce zero gas into the measurement system at the

calibration valve assembly. When the system output has stabilized, switch quickly to the high-level calibration gas. Record the time from the concentration change to the measurement system response equivalent to 95 percent of the step change. Repeat the test three times and average the results.

7. *Emission Measurement Test Procedure*

7.1 Organic Measurement. Begin sampling at the start of the test period, recording time and any required process information as appropriate. In particular, note on the recording chart periods of process interruption or cyclic operation.

7.2 Drift Determination. Immediately following the completion of the test period and hourly during the test period, reintroduce the zero and mid-level calibration gases, one at a time, to the measurement system at the calibration valve assembly. (Make no adjustments to the measurement system until after both the zero and calibration drift checks are made.) Record the analyzer response. If the drift values exceed the specified limits, invalidate the test results preceding the check and repeat the test following corrections to the measurement system. Alternatively, recalibrate the test measurement system as in Section 6.4 and report the results using both sets of calibration data (i.e., data determined prior to the test period and data determined following the test period).

8. *Organic Concentration Calculations*

Determine the average organic concentration in terms of ppmv as propane or other calibration gas. The average shall be determined by the integration of the output recording over the period specified in the applicable regulation.

If results are required in terms of ppmv as carbon, adjust measured concentrations using Equation 25A–1.

$$C_c = K\ C_{meas} \qquad \text{Eq. 25A–1}$$

Where:

C_c=Organic concentration as carbon, ppmv.

C_{meas}=Organic concentration as measured, ppmv.

K=Carbon equivalent correction factor,

K=2 for ethane.

K=3 for propane.

K=4 for butane.

K=Appropriate response factor for other organic calibration gases.

9. *Bibliography*

1. Measurement of Volatile Organic Compounds—Guideline Series. U.S. Environmental Protection Agency. Research Triangle Park, NC. Publication No. EPA–450/2–78–041. June 1978. p. 46–54.

2. Traceability Protocol for Establishing True Concentrations of Gases Used for Calibration and Audits of Continuous Source Emission Monitors (Protocol No. 1). U.S. Environmental Protection Agency, Environmental Monitoring and Support Laboratory. Research Triangle Park, NC. June 1978.

3. Gasoline Vapor Emission Laboratory Evaluation—Part 2. U.S. Environmental Protection Agency, Office of Air Quality Planning and Standards. Research Triangle Park, NC. EMB Report No. 75–GAS–6. August 1975.

METHOD 25B—DETERMINATION OF TOTAL GASEOUS ORGANIC CONCENTRATION USING A NONDISPERSIVE INFRARED ANALYZER

1. *Applicability and Principle*

1.1 Applicability. This method applies to the measurement of total gaseous organic concentration of vapors consisting primarily of alkanes. (Other organic materials may be measured using the general procedure in this method, the appropriate calibration gas, and an analyzer set to the appropriate absorption band.) The concentration is expressed in terms of propane (or other appropriate organic calibration gas) or in terms of carbon.

1.2 Principle. A gas sample is extracted from the source through a heated sample line, if necessary, and glass fiber filter to a nondispersive infrared analyzer (NDIR). Results are reported as volume concentration equivalents of the calibration gas or as carbon equivalents.

2. *Definitions*

The terms and definitions are the same as for Method 25A.

3. *Apparatus*

The apparatus is the same as for Method 25A with the exception of the following:

3.1 Organic Concentration Analyzer. A nondispersive infrared analyzer designed to measure alkane organics and capable of meeting or exceeding the specifications in this method.

4. *Calibration Gases*

The calibration gases are the same as required for Method 25A, Section 4. No fuel gas is required for an NDIR.

5. *Measurement System Performance Specifications*

5.1 Zero Drift. Less than ±3 percent of the span value.

5.2 Calibration Drift. Less than ±3 percent of the span value.

5.3 Calibration Error. Less than ±5 percent of the calibration gas value.

6. *Pretest Preparations*

6.1 Selection of Sampling Site. Same as in Method 25A, Section 6.1.

6.2 Location of Sample Probe. Same as in Method 25A, Section 6.2.

6.3 Measurement System Preparation. Prior to the emission test, assemble the measurement system following the manufacturer's written instructions in preparing the sample interface and the organic analyzer. Make the system operable.

6.4 Calibration Error Test. Same as in Method 25A, Section 6.4.

6.5 Response Time Test Procedure. Same as in Method 25A, Section 6.5.

7. *Emission Measurement Test Procedure*

Proceed with the emission measurement immediately upon satisfactory completion of the calibration.

7.1 Organic Measurement. Same as in Method 25A, Section 7.1.

7.2 Drift Determination. Same as in Method 25A, Section 7.2.

8. *Organic Concentration Calculations*

The calculations are the same as in Method 25A, Section 8.

9. *Bibliography*

The bibliography is the same as in Method 25A.

METHOD 25C—DETERMINATION OF NONMETHANE ORGANIC COMPOUNDS (NMOC) IN MSW LANDFILL GASES

1. Applicability and Principle

1.1 Applicability. This method is applicable to the sampling and measurement of nonmethane organic compounds (NMOC) as carbon in MSW landfill gases.

1.2 Principle. A sample probe that has been perforated at one end is driven or augered to a depth of 1.0 meter below the bottom of the landfill cover. A sample of the landfill gas is extracted with an evacuated cylinder. The NMOC content of the gas is determined by injecting a portion of the gas into a gas chromatographic column to separate the NMOC from carbon monoxide (CO), carbon dioxide (CO_2), and methane (CH_4); the NMOC are oxidized to CO_2, reduced to CH_4, and measured by a flame ionization detector (FID). In this manner, the variable response of the FID associated with different types of organics is eliminated.

2. Apparatus

2.1 Sample Probe. Stainless steel, with the bottom third perforated. The sample probe shall be capped at the bottom and shall have a threaded cap with a sampling attachment at the top. The sample probe shall be long enough to go through and extend no less than 1.0 meter below the landfill cover. If the sample probe is to be driven into the landfill, the bottom cap should be designed to facilitate driving the probe into the landfill.

2.2 Sampling Train.

2.2.1 Rotameter with Flow Control Valve. Capable of measuring a sample flow rate of 500 ml/min or less (30.5±3.1 m^3/min). The control valve shall be made of stainless steel.

2.2.2 Sampling Valve. Stainless steel.

2.2.3 Pressure Gauge. U-tube mercury manometer, or equivalent, capable of measuring pressure to within 1 mm Hg in the range of 0 to 1,100 mm Hg.

2.2.4 Sample Tank. Stainless steel or aluminum cylinder, with a minimum volume of 4 liters and equipped with a stainless steel sample tank valve.

2.3 Vacuum Pump. Capable of evacuating to an absolute pressure of 10 mm Hg.

2.4 Purging Pump. Portable, explosion proof, and suitable for sampling NMOC.

2.5 Pilot Probe Procedure. The following are needed only if the tester chooses to use the procedure described in section 4.2.1.

2.5.1 Pilot Probe. Tubing of sufficient strength to withstand being driven into the landfill by a post driver and an outside diameter of at least 6.0 millimeters smaller than the sample probe. The pilot probe shall be capped on both ends and long enough to go through the landfill cover and extend no less than 1.0 meter into the landfill.

2.5.2 Post Driver and Compressor. Capable of driving the pilot probe and the sampling probe into the landfill.

2.6 Auger Procedure. The following are needed only if the tester chooses to use the procedure described in section 4.2.2.

2.6.1 Auger. Capable of drilling through the landfill cover and to a depth of no less than 0.9 meters into the landfill.

2.6.2 Pea Gravel.

2.6.3 Bentonite.

2.7 NMOC Analyzer, Barometer, Thermometer, and Syringes. Same as in sections 2.3, 2.4.1, 2.4.2, 2.4.4, respectively, of Method 25.

3. Reagents

3.1 NMOC Analysis. Same as in Method 25, section 3.2.

3.2 Calibration. Same as in Method 25, section 3.4, except omit section 3.4.3.

4. Procedure

4.1 Sample Tank Evacuation and Leak Check. Conduct the sample tank evacuation and leak check either in the laboratory or the field. Connect the pressure gauge and sampling valve to the sample tank. Evacuate the sample tank to 10 mm Hg absolute pressure or less. Close the sampling valve, and allow the tank to sit for 60 minutes. The tank is acceptable if no change is noted. Include the results of the leak check in the test report.

4.2 Sample Probe Installation. The tester may use the procedure in sections 4.2.1 or 4.2.2. CAUTION: Since this method is complex, only experienced personnel should perform this test. LFG contains methane, therefore explosive mixtures may exist on or near the landfill. It is advisable to take appropriate safety precautions when testing landfills, such as refraining from smoking and installing explosion-proof equipment.

4.2.1 Pilot Probe Procedure. Use the post driver to drive the pilot probe at least 1.0 meter below the landfill cover. Alternative procedures to drive the probe into the landfill may be used subject to the approval of the Administrator.

Remove the pilot probe and drive the sample probe into the hole left by the pilot probe. The sample probe shall extend not less than 1.0 meter below the landfill cover and shall protrude about 0.3 meters above the landfill cover. Seal around the sampling probe with bentonite and cap the sampling probe with the sampling probe cap.

4.2.2 Auger Procedure. Use an auger to drill a hole through the landfill cover and to at least 1.0 meter below the landfill cover. Place the sample probe in the hole and backfill with pea gravel to a level 0.6 meters from the surface. The sample probe shall protrude at least 0.3 meters above the landfill cover. Seal the remaining area around the probe with bentonite. Allow 24 hours for the landfill gases to equilibrate inside the augered probe before sampling.

4.3 Sample Train Assembly. Prepare the sample by evacuating and filling the sample tank with helium three times. After the third evacuation, charge the sample tank with helium to a pressure of approximately 325 mm Hg. Record the pressure, the ambient temperature, and the barometric pressure. Assemble the sampling probe purging system as shown in figure 1.

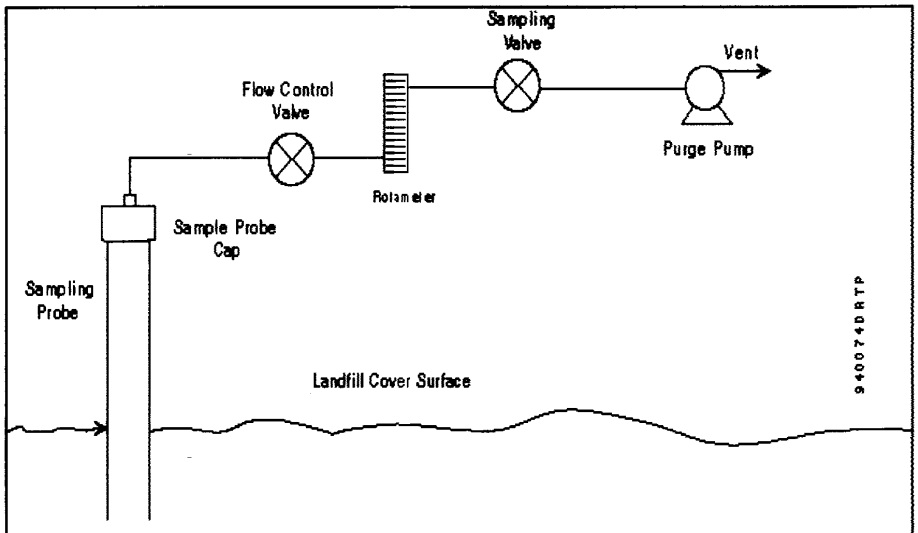

Figure 1. Schematic of sampling probe purging system.

4.4 Sampling Procedure. Open the sampling valve and use the purge pump and the flow control valve to evacuate at least two sample probe volumes from the system at a flow rate of 500 ml/min or less (30.5±3.1 m^3/min). Close the sampling valve and replace the purge pump with the sample tank apparatus as shown in figure 2. Open the sampling valve and the sample tank valves and, using the flow control valve, sample at a flow rate of 500 ml/min or less (30.5±3.1 m^3/min) until the sample tank gauge pressure is zero. Disconnect the sampling tank apparatus and use the carrier gas bypass valve to pressurize the sample cylinder to approximately 1,060 mm Hg absolute pressure with helium and record the final pressure. Alternatively, the sample tank may be pressurized in the lab. If not analyzing for N_2, the sample cylinder may be pressurized with zero air. Use Method 3C to determine the percent N_2 in the sample. Presence of N_2 indicates infiltration of ambient air into the gas sample. The landfill sample is acceptable if the concentration of N_2 is less than 20 percent.

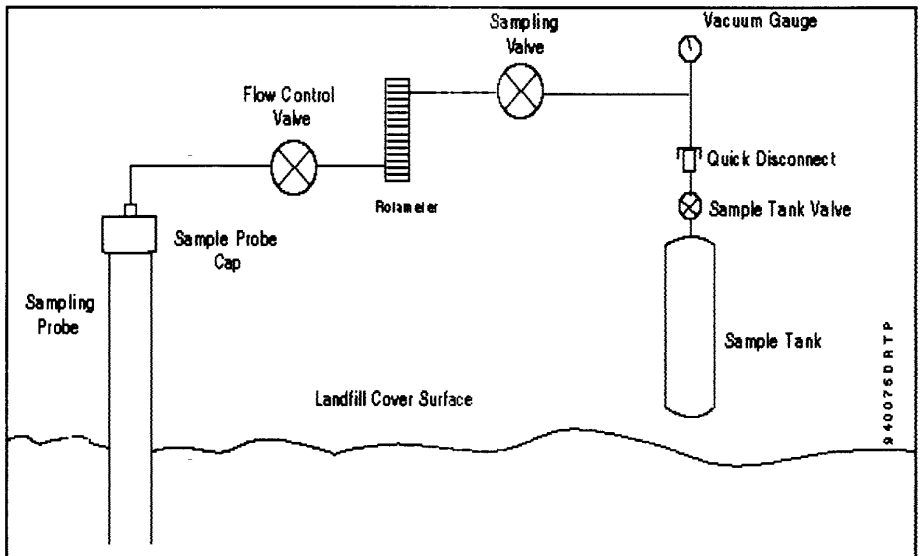

Figure 2. Schematic of sampling train.

4.5 Analysis. The oxidation, reduction, and measurement of NMOC is similar to Method 25. Before putting the NMOC analyzer into routine operation, conduct an initial performance test. Start the analyzer, and perform all the necessary functions to put the analyzer into proper working order. Conduct the performance test according to the procedures established in section 5.1. Once the performance test has been successfully completed and the NMOC calibration response factor has been determined, proceed with sample analysis as follows:

4.5.1 Daily Operations and Calibration Checks. Before and immediately after the analysis of each set of samples or on a daily basis (whichever occurs first), conduct a calibration test according to the procedures established in section 5.2. If the criteria of the daily calibration test cannot be met, repeat the NMOC analyzer performance test (section 5.1) before proceeding.

4.5.2 Operating Conditions. Same as in Method 25, section 4.4.2.

4.5.3 Analysis of Sample Tank. Purge the sample loop with sample, and then inject the sample. Under the specified operating conditions, the CO_2 in the sample will elute in approximately 100 seconds. As soon as the detector response returns to baseline following the CO_2 peak, switch the carrier gas flow to backflush, and raise the column oven temperature to 195 °C as rapidly as possible. A rate of 30 °C/min has been shown to be adequate. Record the value obtained for any measured NMOC. Return the column oven temperature to 85 °C in preparation for the next analysis. Analyze each sample in triplicate, and report the average as C_{tm}.

4.6 Audit Samples. Same as in Method 25, section 4.5.

4.7 Deactivation of Sample Probe Holes. Once sampling has taken place, either plug the sampling probes with a cap or remove the probes and refill the hole with cover material.

5. Calibration and Operational Checks

Maintain a record of performance of each item.

5.1 Initial NMOC Analyzer Performance Test. Same as in Method 25, section 5.2, except omit the linearity checks for CO_2 standards.

5.2 NMOC Analyzer Daily Calibration. NMOC response factors, same as in Method 25, section 5.3.2.

6. Calculations

All equations are written using absolute pressure; absolute pressures are determined by adding the measured barometric pressure to the measured gauge of manometer pressure.

6.1 Nomenclature.

B_w=moisture content in the sample, fraction
C_{N2}=measured N_2 concentration, fraction

C_t=calculated NMOC concentration, ppmv C equivalent
C_{tm}=measured NMOC concentration, ppmv C equivalent
P_b=barometric pressure, mm Hg
P_{ti}=gas sample tank pressure before sampling, mm Hg absolute
P_t=gas sample tank pressure at completion of sampling, but before pressurizing, mm Hg absolute
P_{tf}=final gas sample tank pressure after pressurizing, mm Hg absolute
P_w=vapor pressure of H_2O (from table 25C–1), mm Hg
T_{ti}=sample tank temperature before sampling, °K
T_t=sample tank temperature at completion of sampling, but before pressuring, °K
T_{tf}=sample tank temperature after pressurizing, °K
r=total number of analyzer injections of sample tank during analysis (where j=injection number, 1. . .r)

6.2 Water Correction. Use table 25C–1, the LFG temperature, and barometric pressure at the sampling site to calculate B_w.

$$B_w = \frac{P_w}{P_b}$$

TABLE 25C–1.—MOISTURE CORRECTION

Temperature, °C	Vapor Pressure of H_2O, mm Hg
4	6.1
6	7.0
8	8.0
1	9.2
12	10.5
14	12.0
16	13.6
18	15.5
20	17.5
22	19.8
24	22.4
26	25.2
28	28.3
30	31.8

6.3 NMOC Concentration. Use the following equation to calculate the concentration of NMOC for each sample tank.

$$C_t = \frac{\frac{P_{tf}}{T_{tf}}}{\frac{P_t}{T_t} - \frac{P_{ti}}{T_{ti}}} \quad \frac{1}{\left(1 - B_w - C_{N2}\right) r} \sum_{j=1}^{r} C_{tm}^{(j)}$$

7. Bibliography

1. Salon, Albert E., Samuel Witz, and Robert D. MacPhee. Determination of Solvent Vapor Concentrations by Total Combustion Analysis: A Comparison of Infrared with Flame Ionization Detectors. Paper No. 75–33.2. (Presented at the 68th Annual Meeting of the Air Pollution Control Association. Boston, Massachusetts. June 15–20, 1975.) p. 14.

2. Salon, Albert E., William L. Oaks, and Robert D. MacPhee. Measuring the Organic Carbon Content of Source Emissions for Air Pollution Control. Paper No. 74–190. (Presented at the 67th Annual Meeting of the Air Pollution Control Association. Denver, Colorado. June 9–13, 1974.) p. 25.

METHOD 25D—DETERMINATION OF THE VOLATILE ORGANIC CONCENTRATION OF WASTE SAMPLES

Introduction

Performance of this method should not be attempted by persons unfamiliar with the operation of a flame ionization detector (FID) or an electrolytic conductivity detector (ELCD) because knowledge beyond the scope of this presentation is required.

1. Applicability and Principle

1.1 Applicability. This method is applicable for determining the volatile organic (VO) concentration of a waste sample.

1.2 Principle. A sample of waste is obtained at a point which is most representative of the unexposed waste (where the waste has had minimum opportunity to volatilize to the atmosphere). The sample is suspended in an organic/aqueous matrix, then heated and purged with nitrogen for 30 min in order to separate certain organic compounds. Part of the sample is analyzed for carbon concentration, as methane, with an FID, and part of the sample is analyzed for chlorine concentration, as chloride, with an ELCD. The VO concentration is the sum of the carbon and chlorine content of the sample.

2. Apparatus

2.1 Sampling. The following equipment is required:

2.1.1 Sampling Tube. Flexible Teflon, 0.25 in. ID.

NOTE: Mention of trade names or specific products does not constitute endorsement by the Environmental Protection Agency.

2.1.2 Sample Container. Borosilicate glass, 40 mL, and a Teflon lined screw cap capable of forming an air tight seal.

2.1.3 Cooling Coil. Fabricated from 0.25 in. ID 304 stainless steel tubing with a thermocouple at the coil outlet.

2.2 Analysis. The following equipment is required:

2.2.1 Purging Apparatus. For separating the VO from the waste sample. A schematic of the system is shown in Figure 25D–1. The purging apparatus consists of the following major components.

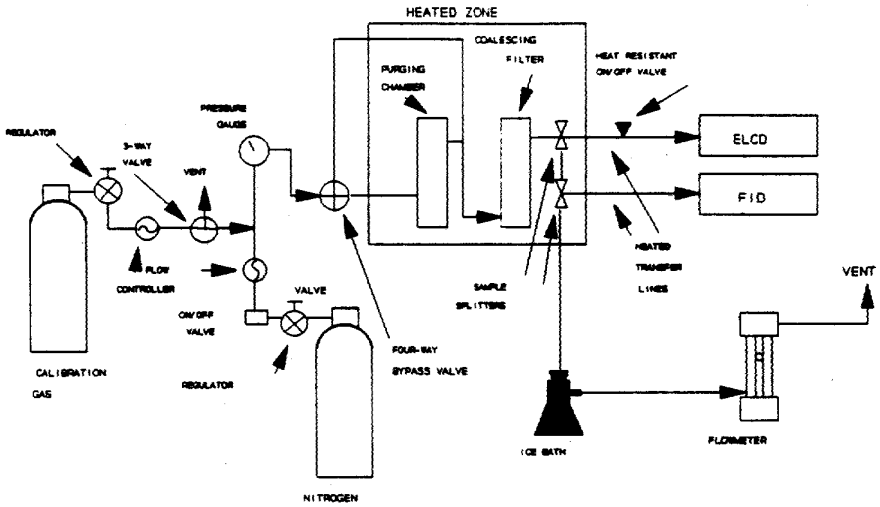

Figure 25D-1. Schematic of Purging Apparatus.

2.2.1.1 Purging Flask. A glass container to hold the sample while it is heated and purged with dry nitrogen. The cap of the purging flask is equipped with three fittings: one for a purging lance (fitting with the #7 Ace-thread), one for the Teflon exit tubing (side fitting, also a #7 Ace-thread), and a third (a 50-mm Ace-thread) to attach the base of the purging flask as shown in Figure 25D–2. The base of the purging flask is a 50-mm ID cylindrical glass tube. One end of the tube is open while the other end is sealed. Exact dimensions are shown in Figure 25D–2.

2.2.1.2 Purging Lance. Glass tube, 6-mm OD by 30 cm long. The purging end of the tube is fitted with a four-arm bubbler with each tip drawn to an opening 1 mm in diameter.

Details and exact dimensions are shown in Figure 25D–2.

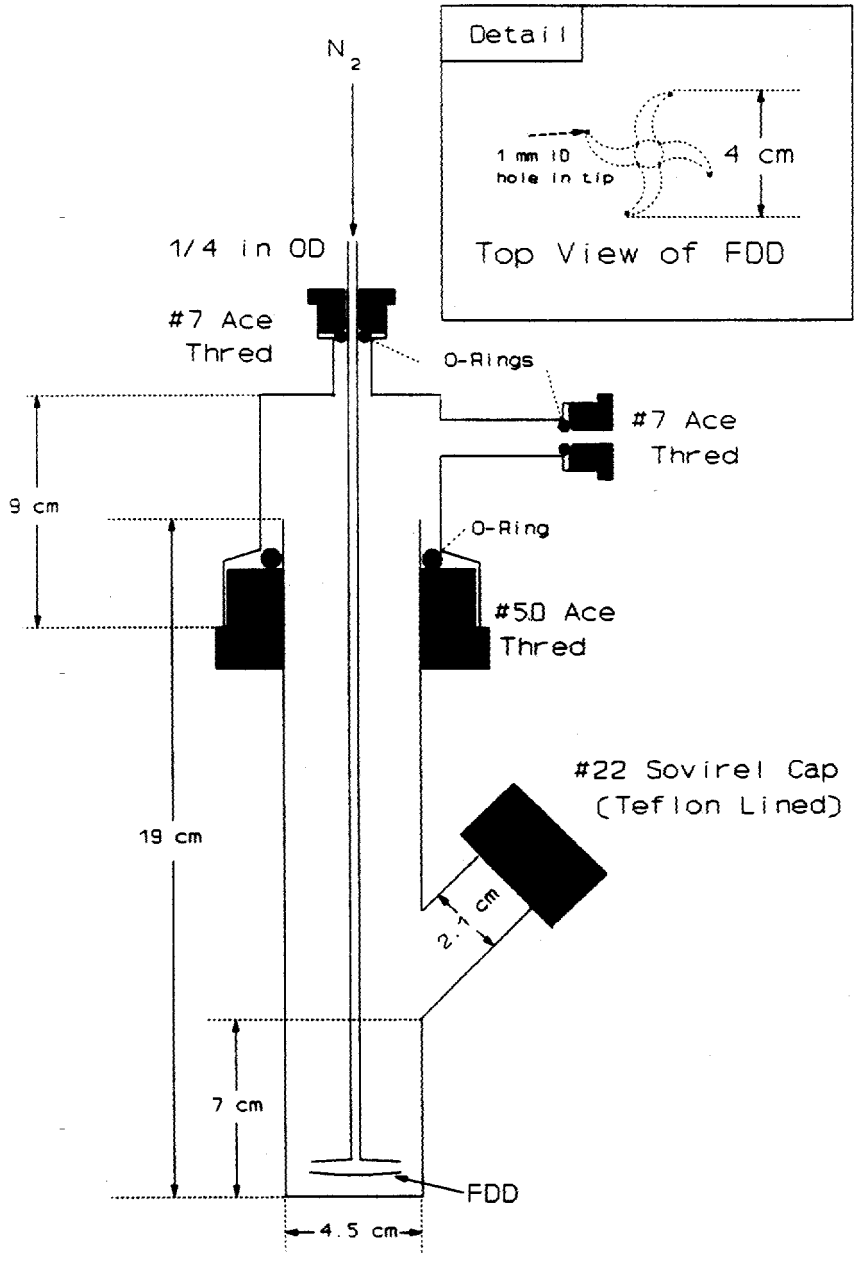

Figure 25D-2. Schematic of Purge Chamber

2.2.1.3 Coalescing Filter. Porous fritted disc incorporated into a container with the same dimensions as the purging flask. The details of the design are shown in Figure 25D–3.

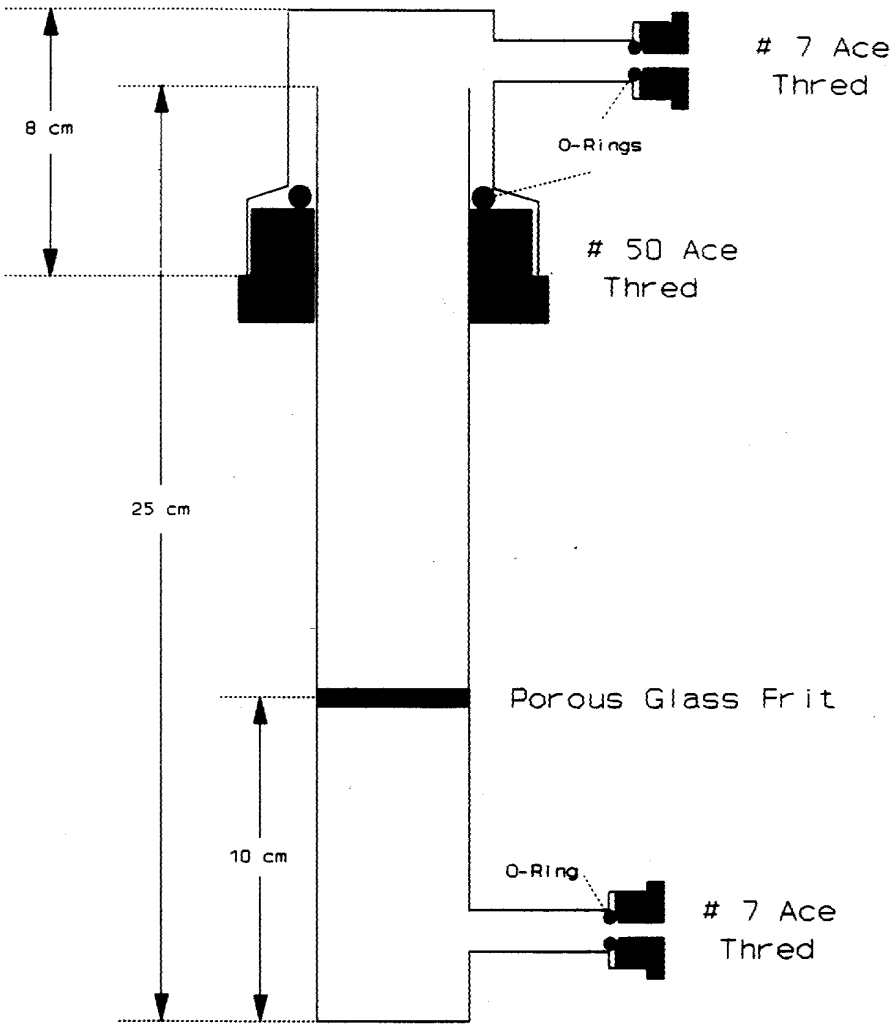

Figure 25D-3. Schematic of Coalescing Filter

2.2.1.4 Constant Temperature Chamber. A forced draft oven capable of maintaining a uniform temperature around the purging flask and coalescing filter of 75±2 °C.

2.2.1.5 Three-way Valve. Manually operated, stainless steel. To introduce calibration gas into system.

2.2.1.6 Flow Controllers. Two, adjustable. One capable of maintaining a purge gas flow

rate of 6±.06 L/min. The other capable of maintaining a calibration gas flow rate of 1–100 mL/min.

2.2.1.7 Rotameter. For monitoring the air flow through the purging system (0–10 L/min).

2.2.1.8 Sample Splitters. Two heated flow restrictors (placed inside oven or heated to 120±10 °C). At a purge rate of 6 L/min, one will supply a constant flow to the first detector (the rest of the flow will be directed to the second sample splitter). The second splitter will split the analytical flow between the second detector and the flow restrictor. The approximate flow to the FID will be 40 mL/min and to the ELCD will be 15 mL/min, but the exact flow must be adjusted to be compatible with the individual detector and to meet its linearity requirement. The two sample splitters will be connected to each other by ⅛″ OD stainless steel tubing.

2.2.1.9 Flow Restrictor. Stainless steel tubing, ⅛″ OD, connecting the second sample splitter to the ice bath. Length is determined by the resulting pressure in the purging flask (as measured by the pressure gauge). The resulting pressure from the use of the flow restrictor shall be 6–7 psiG.

2.2.1.10 Filter Flask. With one-hole stopper. Used to hold ice bath. Excess purge gas is vented through the flask to prevent condensation in the flowmeter and to trap volatile organic compounds.

2.2.1.11 Four-way Valve. Manually operated, stainless steel. Placed inside oven, used to bypass purging flask.

2.2.1.12 On/Off Valves. Two, stainless steel. One heat resistant up to 130 °C and placed between oven and ELCD. The other a toggle valve used to control purge gas flow.

2.2.1.13 Pressure Gauge. Range 0–40 psi. To monitor pressure in purging flask and coalescing filter.

2.2.1.14 Sample Lines. Teflon®, 1/4≤″ OD, used inside the oven to carry purge gas to and from purging chamber and to and from coalescing filter to four-way valve. Also used to carry sample from four-way valve to first sample splitter.

2.2.1.15 Detector Tubing. Stainless steel, ⅛″ OD, heated to 120±10 °C. Used to carry sample gas from each sample splitter to a detector. Each piece of tubing must be wrapped with heat tape and insulating tape in order to insure that no cold spots exist. The tubing leading to the ELCD will also contain a heat-resistant on-off valve (Section 2.2.1.12) which shall also be wrapped with heat-tape and insulation.

2.2.2 Volatile Organic Measurement System. Consisting of an FID to measure the carbon concentration of the sample and an ELCD to measure the chlorine concentration.

2.2.2.1 FID. A heated FID meeting the following specifications is required.

2.2.2.1.1 Linearity. A linear response (+ 5 percent) over the operating range as demonstrated by the procedures established in Section 5.1.1.

2.2.2.1.2 Range. A full scale range of 50 pg carbon/sec to 50 μKg carbon/sec. Signal attenuators shall be available to produce a minimum signal response of 10 percent of full scale.

2.2.2.1.3 Data Recording System. A digital integration system compatible with the FID for permanently recording the output of the detector. The recorder shall have the capability to start and stop integration at points selected by the operator or it shall be capable of the ''integration by slices'' technique (this technique involves breaking down the chromatogram into smaller increments, integrating the area under the curve for each portion, subtracting the background for each portion, and then adding all of the areas together for the final area count).

2.2.2.2 ELCD. An ELCD meeting the following specifications is required. The ELCD components shall consist of quartz reactor tubing and 1-propanol as electrolyte. The electrolyte flow through the conductivity cell shall be 1 to 2 mL/min.

NOTE: A ¼-in. ID quartz reactor tube is recommended to reduce carbon buildup and the resulting detector maintenance.

2.2.2.2.1 Linearity. A linear response (± 10 percent) over the response range as demonstrated by the procedures in Section 5.1.2.

2.2.2.2.2 Range. A full scale range of 5.0 pg/sec to 500 ng/sec chloride. Signal attenuators shall be available to produce a minimum signal response of 10 percent of full scale.

2.2.2.2.3 Data Recording System. A digital integration system compatible with the output voltage range of the ELCD. The recorder must have the capability to start and stop integration at points selected by the operator or it shall be capable of performing the ''integration by slices'' technique.

3. Reagents

3.1 Sampling.

3.1.1 Polyethylene Glycol (PEG). Ninety-eight percent pure with an average molecular weight of 400. Before using the PEG, remove any organic compounds that might be detected as volatile organics by heating it to 120 °C and purging it with nitrogen at a flow rate of 1 to 2 L/min for 2 hours. The cleaned PEG must be stored under a 1 to 2 L/min nitrogen purge until use. The purge apparatus is shown in Figure 25D–4.

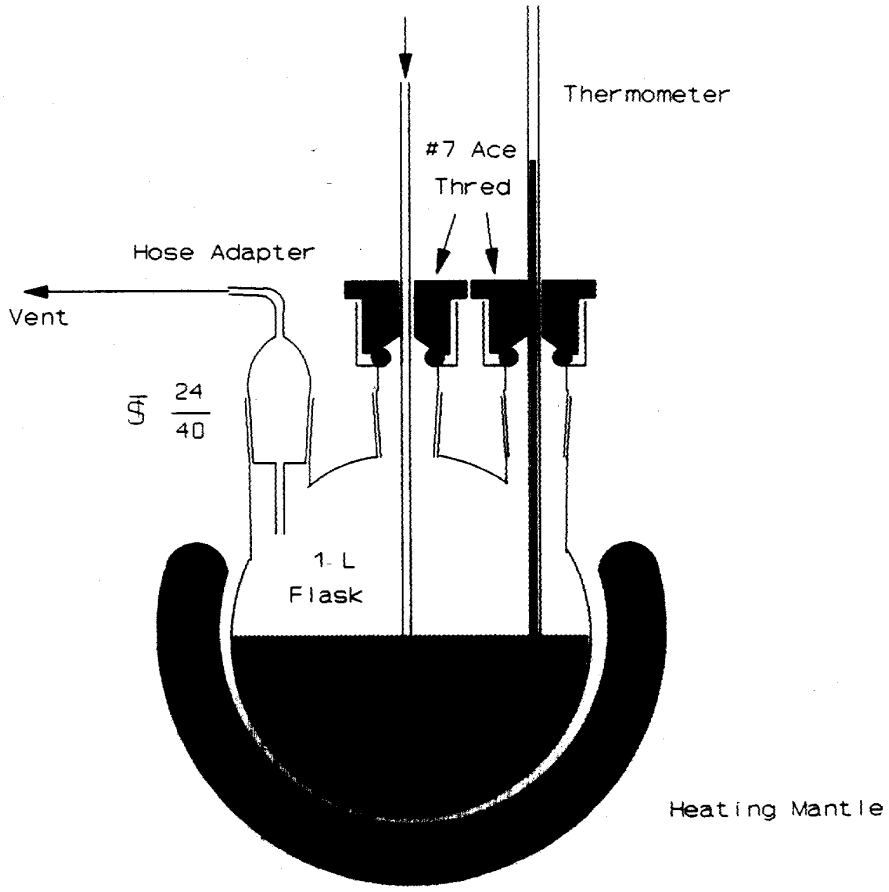

Figure 25D-4. Schematic of PEG Cleaning System

3.2 Analysis.

3.2.1 Sample Separation. The following are required for the sample purging step.

3.2.1.1 PEG. Same as Section 3.1.1.

3.2.1.2 Purge Gas. Zero grade nitrogen (N_2), containing less than 1 ppm carbon.

3.2.2 Volatile Organics Measurement. The following are required for measuring the VO concentration.

3.2.2.1 Hydrogen (H_2). Zero grade H_2, 99.999 percent pure.

3.2.2.2 Combustion Gas. Zero grade air or oxygen as required by the FID.

3.2.2.3 Calibration Gas. Pressurized gas cylinder containing 10 percent propane and 1 percent 1,1-dichloroethylene by volume in nitrogen.

3.2.2.4 Water. Deionized distilled water that conforms to American Society for Testing and Materials Specification D 1193–77, Type 3 (incorporated by reference as specified in §60.17), is required for analysis. At the option of the analyst, the $KMnO_4$ test for oxidizable organic matter may be omitted when high concentrations are not expected to be present.

3.2.2.5 1–Propanol. ACS grade or better. Electrolyte Solution. For use in the ELCD.

4. Procedure

4.1 Sampling.

4.1.1 Sampling Plan Design and Development. Use the procedures in chapter nine of the Office of Solid Waste's publication, *Test Methods for Evaluating Solid Waste,* third edition (SW–846), as guidance in developing a sampling plan.

4.1.2 Single Phase or Well-mixed Waste. Well-mixed in the context of this method refers to turbulent flow which results in multiple-phase waste in effect behaving as single-phase waste due to good mixing.

4.1.2.1 Install a sampling tap to obtain the sample at a point which is most representative of the unexposed waste (where the waste has had minimum opportunity to volatilize to the atmosphere). Assemble the sampling apparatus as shown in Figure 25D–5.

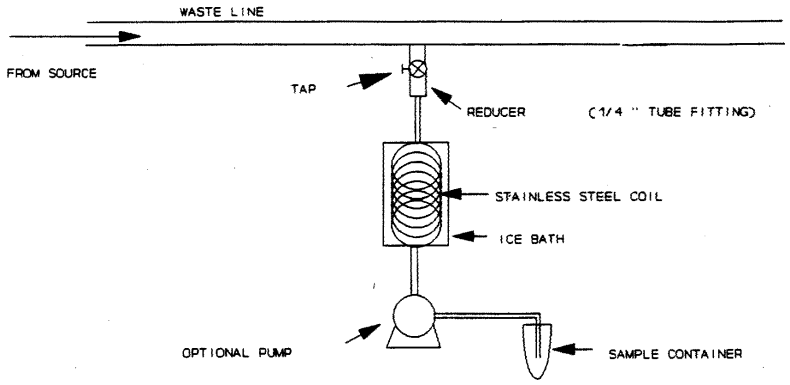

Figure 25D-5. Schematic of Sampling Apparatus.

4.1.2.2 Prepare the sampling containers as follows: Pour 30 mL of clean PEG into the container. PEG will reduce but not eliminate the loss of organics during sample collection. Weigh the sample container with the screw cap, the PEG, and any labels to the nearest 0.01 g and record the weight (m_{st}). Store the containers in an ice bath until 1 h before sampling (PEG will solidify at ice bath temperatures; allow the containers to reach room temperature before sampling).

4.1.2.3 Begin sampling by purging the sample lines and cooling coil with at least four volumes of waste. Collect the purged material in a separate container and dispose of it properly.

4.1.2.4 After purging, stop the sample flow and direct the sampling tube to a preweighed sample container, prepared as described in Section 4.1.2.2. Keep the tip of the tube below the surface of the PEG during sampling to minimize contact with the atmosphere. Sample at a flow rate such that the temperature of the waste is less than 10 °C. Fill the sample container and immediately cap it (within 5 seconds) so that a minimum headspace exists in the container. Store immediately in a cooler and cover with ice.

4.1.3 Multiple-phase Waste. Collect a 10 g sample of each phase of waste generated using the procedures described in Section 4.1.2 or 4.1.5. Each phase of the waste shall be analyzed as a separate sample. Calculate the weighted average VO concentration of the waste using Equation 13 (Section 6.14).

4.1.4 Solid waste. Add approximately 10 g of the solid waste to a container prepared in the manner described in Section 4.1.2.2, minimizing headspace. Cap and chill immediately.

4.1.5 Alternative to Tap Installation. If tap installation is impractical or impossible, fill a large, clean, empty container by submerging the container into the waste below the surface of the waste. Immediately fill a container prepared in the manner described in Section 4.1.2.2 with approximately 10 g of the waste collected in the large container. Minimize headspace, cap and chill immediately.

4.1.6 Alternative sampling techniques may be used upon the approval of the Administrator.

4.2 Sample Recovery.

4.2.1 Assemble the purging apparatus as shown in Figures 25D–1 and 25D–2. The oven

shall be heated to 75 ± 2 °C. The sampling lines leading from the oven to the detectors shall be heated to 120 ± 10 °C with no cold spots. The flame ionization detector shall be operated with a heated block. Adjust the purging lance so that it reaches the bottom of the chamber.

4.2.2 Remove the sample container from the cooler, and wipe the exterior of the container to remove any extraneous ice, water, or other debris. Reweigh the sample container to the nearest 0.01 g, and record the weight (m_{sf}). Pour the contents of the sample container into the purging flask, rinse the sample container three times with a total of 20 mL of PEG (since the sample container originally held 30 mL of PEG, the total volume of PEG added to the purging flask will be 50 mL), transferring the rinsings to the purging flask after each rinse. Cap purging flask between rinses. The total volume of PEG in the purging flask shall be 50 mL. Add 50 mL of water to the purging flask.

4.3 Sample Analysis.

4.3.1 Turn on the constant temperature chamber and allow the temperature to equilibrate at 75 ± 2 °C. Turn the four-way valve so that the purge gas bypasses the purging flask, the purge gas flowing through the coalescing filter and to the detectors (standby mode). Turn on the purge gas. Allow both the FID and the ELCD to warm up until a stable baseline is achieved on each detector. Pack the filter flask with ice. Replace ice after each run and dispose of the waste water properly. When the temperature of the oven reaches 75±2 °C, start both integrators and record baseline. After 1 min, turn the four-way valve so that the purge gas flows through the purging flask, to the coalescing filter and to the sample splitters (purge mode). Continue recording the response of the FID and the ELCD. Monitor the readings of the pressure gauge and the rotameter. If the readings fall below established setpoints, stop the purging, determine the source of the leak, and resolve the problem before resuming. Leaks detected during a sampling period invalidate that sample.

4.3.2 As the purging continues, monitor the output of the detectors to make certain that the analysis is proceeding correctly and that the results are being properly recorded. Every 10 minutes read and record the purge flow rate, the pressure and the chamber temperature. Continue the purging for 30 minutes.

4.3.3 For each detector output, integrate over the entire area of the peak starting at 1 minute and continuing until the end of the run. Subtract the established baseline area from the peak area. Record the corrected area of the peak. See Figure 25D–6 for an example integration.

4.4 Water Blank. A water blank shall be analyzed for each batch of cleaned PEG prepared. Transfer about 60 mL of water into the purging flask. Add 50 mL of the cleaned PEG to the purging flask. Treat the blank as described in Sections 4.2 and 4.3, excluding Section 4.2.2. Calculate the concentration of carbon and chlorine in the blank sample (assume 10 g of waste as the mass). A VO concentration equivalent to ≤10 percent of the applicable standard may be subtracted from the measured VO concentration of the waste samples. Include all blank results and documentation in the test report.

5. Operational Checks and Calibration.

Maintain a record of performance of each item.

5.1 Initial Performance Check of Purging System.

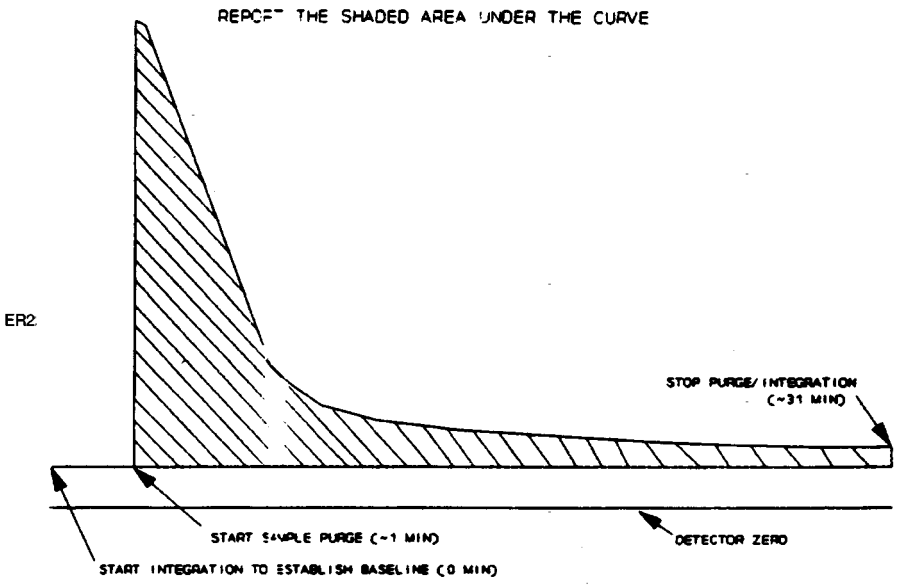

Figure 25D-6. Example integration for either detector.

Before placing the system in operation, after a shutdown of greater than six months, after any major modifications, and at least once per month during continuous operation, conduct the linearity checks described in Sections 5.1.1 and 5.1.2. Install calibration gas at the three-way calibration gas valve. See Figure 25D–1.

5.1.1 Linearity Check Procedure. Using the calibration standard described in Section 3.2.2.3 and by varying the injection time, it is possible to calibrate at multiple concentration levels. Use Equation 3 to calculate three sets of calibration gas flow rates and run times needed to introduce a total methane mass (m_{co}) of 1, 5, and 10 mg into the system (low, medium and high FID calibration, respectively). Use Equation 4 to calculate three sets of calibration gas flow rates and run times needed to introduce a total chloride mass (m_{ch}) of 1, 5, and 10 mg into the system (low, medium and high ELCD calibration, respectively). With the system operating in standby mode, allow the FID and the ELCD to establish a stable baseline. Set the secondary pressure regulator of the calibration gas cylinder to the same pressure as the purge gas cylinder and set the proper flow rate with the calibration flow controller (see Figure 25D–1). The calibration gas flow rate can be measured with a flowmeter attached to the vent position of the calibration gas valve. Set the four-way bypass valve to standby position so that the calibration gas flows through the coalescing filter only. Inject the calibration gas by turning the calibration gas valve from vent position to inject position. Continue the calibration gas flow for the appropriate period of time before switching the calibration valve to vent position. Continue recording the response of the FID and the ELCD for 5 min after switching off calibration gas flow. Make triplicate injections of all six levels of calibration.

5.1.2 Linearity Criteria. Calculate the average response factor (Equations 5 and 6) and the relative standard deviation (RSD) (Equation 10) at each level of the calibration curve for both detectors. Calculate the overall mean of the three response factor averages for each detector. The FID linearity is acceptable if each response factor is within 5 percent of the overall mean and if the RSD for each set of triplicate injections is less than 5 percent. The ELCD linearity is acceptable if each response factor is within 10 percent of the overall mean and if the RSD for each set of triplicate injections is less than 10 percent. Record the overall mean value of the response factors for the FID and the ELCD. If the calibration for either the FID or the ELCD does not meet the criteria, correct the detector/system problem and repeat Sections 5.1.1 and 5.1.2.

5.2 Daily Calibrations.

5.2.1 Daily Linearity Check. Follow the procedures outlined in Section 5.1.1 to analyze the medium level calibration for both the FID and the ELCD in duplicate at the start of the day. Calculate the response factors and the RSDs for each detector. For the FID, the calibration is acceptable if the average response factor is within 5 percent of the overall mean response factor (Section 5.1.2) and if the RSD for the duplicate injection is less than 5 percent. For the ELCD, the calibration is acceptable if the average response factor is within 10 percent of the overall mean response factor (Section 5.1.2) and if the RSD for the duplicate injection is less than 10 percent. If the calibration for either the FID or the ELCD does not meet the criteria, correct the detector/system problem and repeat Sections 5.1.1 and 5.1.2.

5.2.2 Calibration Range Check.

5.2.2.1 If the waste concentration for either detector falls below the range of calibration for that detector, use the procedure outlined in Section 5.1.1 to choose 2 calibration points that bracket the new target concentration. Analyze each of these points in triplicate (as outlined in Section 5.1.1) and use the criteria in Section 5.1.2 to determine the linearity of the detector in this ''minicalibration'' range.

5.2.2.2 After the initial linearity check of the minicalibration curve, it is only necessary to test one of the points in duplicate for the daily calibration check (in addition to the points specified in Section 5.2.1). The average daily mini-calibration point should fit the linearity criteria specified in Section 5.2.1. If the calibration for either the FID or the ELCD does not meet the criteria, correct the detector/system problem and repeat the calibration procedure mentioned in the first paragraph of Section 5.2.2. A mini-calibration curve for waste concentrations above the calibration curve for either detector is optional.

5.3 Analytical Balance. Calibrate against standard weights.

5.4 Audit Procedure. Concurrently analyze the audit sample and a set of compliance samples in the same manner to evaluate the technique of the analyst and the standards preparation. The same analyst, analytical reagents, and analytical system shall be used both for compliance samples and the EPA audit sample. If this condition is met, auditing of subsequent compliance analyses for the same enforcement agency within 30 days is not required. An audit sample set may not be used to validate different sets of compliance samples under the jurisdiction of different enforcement agencies, unless prior arrangements are made with both enforcement agencies.

5.5 Audit Samples. Audit Sample Availability. Audit samples will be supplied only to enforcement agencies for compliance tests. The availability of audit samples may be determined by writing: Source Test Audit Coordinator (MD–77B), Quality Assurance Division, Atmospheric Research and Exposure Assessment Laboratory, U.S. Environmental Protection Agency, Research Triangle Park, NC 27711 or by calling the Source Test Audit Coordinator (STAC) at (919) 541–7834. The request for the audit sample must be made at least 30 days prior to the scheduled compliance sample analysis. If audit samples are not available, follow the quality control sample procedures in Section 5.7.

5.6 Audit Results. Calculate the audit sample concentration according to the calculation procedure described in the audit instructions included with the audit sample. Fill in the audit sample concentration and the analyst's name on the audit response form included with the audit instructions. Send one copy to the EPA Regional Office or the appropriate enforcement agency and a second copy to the STAC. The EPA Regional office or the appropriate enforcement agency will report the results of the audit to the laboratory being audited. Include this response with the results of the compliance samples in relevant reports to the EPA Regional Office or the appropriate enforcement agency.

5.7 Quality Control Samples. If audit samples are not available, prepare and analyze the two types of quality control samples (QCS) listed in Sections 5.7.1 and 5.7.2. Before placing the system in operation, after a shutdown of greater than six months, and after any major modifications, analyze each QCS in triplicate. For each detector, calculate the percent recovery by dividing measured concentration by theoretical concentration and multiplying by 100. Determine the mean percent recovery for each detector for each QCS triplicate analysis. The RSD for any triplicate analysis shall be ≤10 percent. For QCS 1 (methylene chloride), the percent recovery shall be ≥90 percent for carbon as methane, and ≥55 percent for chlorine as chloride. For QCS 2 (1,3-dichloro-2-propanol), the percent recovery shall be ≤15 percent for carbon as methane, and ≤6 percent for chlorine as chloride. If the analytical system does not meet the above-mentioned criteria for both detectors, check the system parameters (temperature, system pressure, purge rate, etc.), correct the problem, and repeat the triplicate analysis of each QCS.

5.7.1 QCS 1, Methylene Chloride. Prepare a stock solution by weighing, to the nearest 0.1 mg, 55 µL of HPLC grade methylene chloride in a tared 5 mL volumetric flask. Record the weight in milligrams, dilute to 5 mL with cleaned PEG, and inject 100 µL of the stock solution into a sample prepared as a water blank (50 mL of cleaned PEG and 60 mL of water in the purging flask). Analyze

the QCS according to the procedures described in Sections 4.2 and 4.3, excluding Section 4.2.2. To calculate the theoretical carbon concentration (in mg) in QCS 1, multiply mg of methylene chloride in the stock solution by 3.777×10^{-3}. To calculate the theoretical chlorine concentration (in mg) in QCS 1, multiply mg of methylene chloride in the stock solution by 1.670×10^{-2}.

5.7.2 QCS 2, 1,3-dichloro-2-propanol. Prepare a stock solution by weighing, to the nearest 0.1 mg, 60 µL of high purity grade 1,3-dichloro-2-propanol in a tared 5 mL volumetric flask. Record the weight in milligrams, dilute to 5 mL with cleaned PEG, and inject 100 µL of the stock solution into a sample prepared as a water blank (50 mL of cleaned PEG and 60 mL of water in the purging flask).

Analyze the QCS according to the procedures described in Sections 4.2 and 4.3, excluding Section 4.2.2. To calculate the theoretical carbon concentration (in mg) in QCS 2, multiply mg of 1,3-dichloro-2-propanol in the stock solution by 7.461×10^{-3}. To calculate the theoretical chlorine concentration (in mg) in QCS 2, multiply mg of 1,3-dichloro-2-propanol in the stock solution by 1.099×10^{-2}.

5.7.3 Routine QCS Analysis. For each set of compliance samples (in this context, set is per facility, per compliance test), analyze one QCS 1 and one QCS 2 sample. The percent recovery for each sample for each detector shall be ± 13 percent of the mean recovery established for the most recent set of QCS triplicate analysis (Section 5.7). If the sample does not meet this criteria, check the system components and analyze another QCS 1 and 2 until a single set of QCS meet the ± 13 percent criteria.

6. Calculations

6.1 Nomenclature.

A_b=Area under the water blank response curve, counts.
A_c=Area under the calibration response curve, counts.
A_s=Area under the sample response curve, counts.
C=Concentration of volatile organics in the sample, ppmw.
C_c=Concentration of carbon, as methane, in the calibration gas, mg/L.
Ch_h=Concentration of chloride in the calibration gas, mg/L.
C_j=VO concentration of phase j, ppmw.
DR_t=Average daily response factor of the FID, mg CH_4 counts.
DR_{th}=Average daily response factor of the ELCD, mg Cl^- counts.
F_j= Weight fraction of phase j present in the waste.
m_{co}=Mass of carbon, as methane, in a calibration run, mg.
m_{ch}=Mass of chloride in a calibration run, mg.
m_s=Mass of the waste sample, g.
m_{sc}=Mass of carbon, as methane, in the sample, mg.
m_{sf}=Mass of sample container and waste sample, g.
m_{sh}=Mass of chloride in the sample, mg.
m_{st}=Mass of sample container prior to sampling, g.
m_{vo}=Mass of volatile organics in the sample, mg.
n=Total number of phases present in the waste.
P_p=Percent propane in calibration gas (L/L).
P_{vc}=Percent 1,1-dichloroethylene in calibration gas (L/L).
Q_c=Flow rate of calibration gas, L/min.
t_c=Length of time standard gas is delivered to the analyzer, min.
W=Weighted average VO concentration, ppmw.

6.2 Concentration of Carbon, as Methane, in the Calibration Gas.

$$C_c = (19.681 \times P_p) + (13.121 \times P_{vc}) \quad \text{Eq. 1}$$

6.3 Concentration of Chloride in the Calibration Gas.

$$C_h = 28.998 \times P_{vc} \quad \text{Eq. 2}$$

6.4 Mass of Carbon, as Methane, in a Calibration Run.

$$m_{co} = C_c \times Q_c \times t_c \quad \text{Eq. 3}$$

6.5 Mass of Chloride in a Calibration Run.

$$m_{ch} = C_{ch} \times Q_c \times t_c \quad \text{Eq. 4}$$

6.6 FID Response Factor, mg/counts.

$$R_t = m_{co}/A_c \quad \text{Eq. 5}$$

6.7 ELCD Response Factor, mg/counts.

$$R_{th} = m_{ch}/A_c \quad \text{Eq. 6}$$

6.8 Mass of Carbon in the Sample.

$$m_{sc} = DR_t (A_s - A_b) \quad \text{Eq. 7}$$

6.9 Mass of Chloride in the Sample.

$$m_{sh} = DR_{th} (A_s - A_b) \quad \text{Eq. 8}$$

6.10 Mass of Volatile Organics in the Sample.

$$m_{vo} = m_{sc} + m_{sh} \quad \text{Eq. 9}$$

6.11 Relative Standard Deviation.

$$RSD = \frac{100}{\overline{X}} \sqrt{\frac{\sum_{i=1}^{n} \left(X_i - \overline{X}\right)^2}{n-1}} \quad \text{Eq. 10}$$

6.12 Mass of Sample.

$m_s = m_{sf} - m_{st}$ Eq. 11

6.13 Concentration of Volatile Organics in Waste.

$C = (m_{vo} \times 1000)/m_s$ Eq. 12

6.14 Weighted Average VO Concentration of Multi-phase Waste.

$$W = \sum_{j=1}^{n} F_j \times \overline{C}_j \qquad \text{Eq. 13}$$

METHOD 25E—DETERMINATION OF VAPOR PHASE ORGANIC CONCENTRATION IN WASTE SAMPLES

Introduction

Performance of this method should not be attempted by persons unfamiliar with the operation of a flame ionization detector (FID) nor by those who are unfamiliar with source sampling because knowledge beyond the scope of this presentation is required.

1. Applicability and Principle

1.1 Applicability. This method is applicable for determining the vapor pressure of waste samples which represent waste which is or will be managed in tanks.

1.2 Principle. The headspace vapor of the sample is analyzed for carbon content by a headspace analyzer, which uses an FID.

2. Interferences

2.1 The analyst shall select the operating parameters best suited to the requirements for a particular analysis. The analyst shall produce confirming data through an adequate supplemental analytical technique and have the data available for review by the Administrator.

3. Apparatus

3.1 Sampling. The following equipment is required:

3.1.1 Sample Containers. Vials, glass, with butyl rubber septa, Perkin-Elmer Corporation Numbers 0105–0129 (glass vials), B001–0728 (gray butyl rubber septum, plug style), 0105–0131 (butyl rubber septa), or equivalent. The seal must be made from butyl rubber. Silicone rubber seals are not acceptable.

3.1.2 Vial Sealer. Perkin-Elmer Number 105–0106, or equivalent.

3.1.3 Gas-Tight Syringe. Perkin-Elmer Number 00230117, or equivalent.

3.1.4 The following equipment is required for sampling.

3.1.4.1 Tap.

3.1.4.2 Tubing. Telfon, 0.25-in. ID. Note: Mention of trade names or specific products does not constitute endorsement by the Environmental Protection Agency.

3.1.4.3 Cooling Coil. Stainless steel (304), 0.25 in.–ID, equipped with a thermocouple at the coil outlet.

3.2 Analysis. The following equipment is required:

3.2.1 Balanced Pressure Headspace Sampler. Perkin-Elmer HS–6, HS–100, or equivalent, equipped with a glass bead column instead of a chromatographic column.

3.2.2 FID. An FID meeting the following specifications is required:

3.2.2.1 Linearity. A linear response (±5 percent) over the operating range as demonstrated by the procedures established in Section 6.1.2.

3.2.2.2 Range. A full scale range of 1 to 10,000 ppm CH_4. Signal attenuators shall be available to produce a minimum signal response of 10 percent of full scale.

3.2.3 Data Recording System. Analog strip chart recorder or digital integration system compatible with the FID for permanently recording the output of the detector.

3.2.4 Thermometer. Capable of reading temperatures in the range of 30° to 60 °C with an accuracy of ±0.1 °C.

4. Reagents

4.1 Analysis. The following items are required for analysis:

4.1.1 Hydrogen (H_2). Zero grade.

4.1.2 Carrier Gas. Zero grade nitrogen, containing less than 1 ppm carbon (C) and less than 1 ppm carbon dioxide.

4.1.3 Combustion Gas. Zero grade air or oxygen as required by the FID.

4.2 Calibration and Linearity Check.

4.2.1 Stock Cylinder Gas Standard. 100 percent propane. The manufacturer shall:

(a) Certify the gas composition to be accurate to ±3 percent or better (see Section 4.2.1.1);

(b) Recommend a maximum shelf life over which the gas concentration does not change by greater than ±5 percent from the certified value; and

(c) Affix the date of gas cylinder preparation, certified propane concentration, and recommended maximum shelf life to the cylinder before shipment to the buyer.

4.2.1.1 Cylinder Standards Certification. The manufacturer shall certify the concentration of the calibration gas in the cylinder by (a) directly analyzing the cylinder and (b) calibrating his analytical procedure on the day of cylinder analysis. To calibrate his analytical procedure, the manufacturer shall use, as a minimum, a three-point calibration curve.

4.2.1.2 Verification of Manufacturer's Calibration Standards. Before using, the manufacturer shall verify each calibration standard by (a) comparing it to gas mixtures prepared in accordance with the procedure described in Section 7.1 of Method 106 of part 61, appendix B, or by (b) calibrating it against Standard Reference Materials (SRM's) prepared by the National Bureau of Standards, if such SRM's are available. The agreement between the initially determined concentration value and the verification concentration value shall be within ±5 percent. The manufacturer must reverify all calibration standards on a time interval consistent with the shelf life of the cylinder standards sold.

5. Procedure

5.1 Sampling.

5.1.1 Install a sampling tap to obtain the sample at a point which is most representative of the unexposed waste (where the waste has had minimum opportunity to volatilize to the atmosphere). Assemble the sampling apparatus as shown in Figure 25E–1.

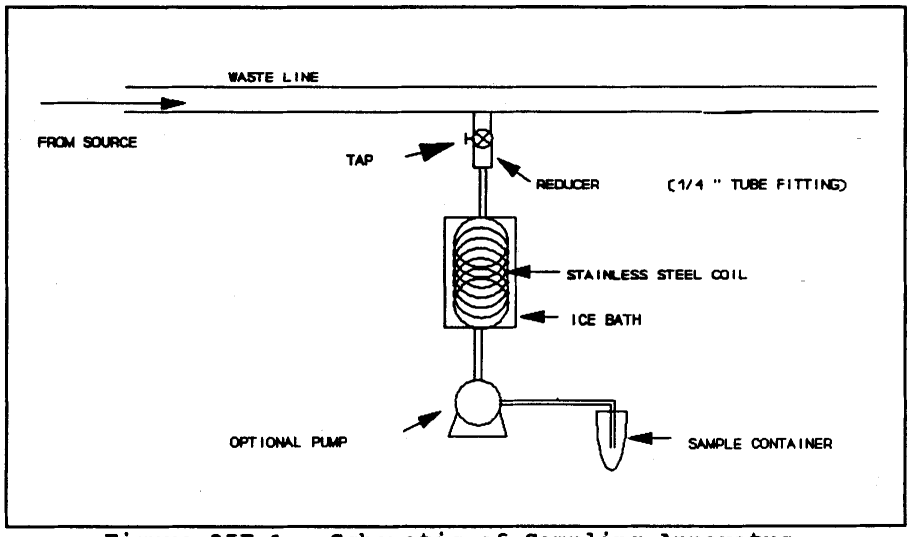

Figure 25E-1. Schematic of Sampling Apparatus.

5.1.2 Begin sampling by purging the sample lines and cooling coil with at least four volumes of waste. Collect the purged material in a separate container and dispose of it properly.

5.1.3 After purging, stop the sample flow and transfer the Teflon sampling tube to a sample container. Sample at a flow rate such that the temperature of the waste is <10 °C (<50 °F). Fill the sample container halfway (±5 percent) and cap it within 5 seconds. Store immediately in a cooler and cover with ice.

5.1.4 Alternative sampling techniques may be used upon the approval of the Administrator.

5.2 Analysis.

5.2.1 Allow one hour for the headspace vials to equilibrate at the temperature specified in the regulation. Allow the FID to warm up until a stable baseline is achieved on the detector.

5.2.2 Check the calibration of the FID daily using the procedures in Section 6.1.2.

5.2.3 Follow the manufacturer's recommended procedures for the normal operation of the headspace sampler and FID.

5.2.4 Use the procedures in Sections 7.4 and 7.5 to calculate the vapor phase organic vapor pressure in the samples.

5.2.5 Monitor the output of the detector to make certain that the results are being properly recorded.

6. Operational Checks and Calibration

Maintain a record of performance of each item.

6.1 Use the procedures in Section 6.1.1 to calibrate the headspace analyzer and FID and check for linearity before the system is first placed in operation, after any shutdown longer than 6 months, and after any modification of the system.

6.1.1 Calibration and Linearity. Use the procedures in Section 6.2.1 of Method 18 of Part 60, Appendix A, to prepare the standards and calibrate the flowmeters, using propane as the standard gas. Fill the calibration standard vials halfway (±5 percent) with deionized water. Purge and fill the airspace with calibration standard. Prepare a minimum of three calibration standards in triplicate at concentrations that will bracket the applicable cutoff. For a cutoff of 5.2 kPa, prepare nominal concentrations of 30,000, 50,000, and 70,000 ppm as propane. For a cutoff of 27.6 kPa, prepare nominal concentrations of 200,000, 300,000, and 400,000 ppm as propane.

6.1.1.1 Use the procedures in Section 5.2.3 to measure the FID response of each standard. Use a linear regression analysis to calculate the values for the slope (k) and the y-intercept (b). Use the procedures in Sections 7.2 and 7.3 to test the calibration and the linearity.

6.1.2 Daily FID Calibration Check. Check the calibration at the beginning and at the end of the daily runs by using the following procedures. Prepare two calibration standards at the nominal cutoff concentration using the procedures in Section 6.1.1. Place one at the beginning and one at the end of the daily run. Measure the FID response of the daily calibration standard and use the values for k and b from the most recent calibration to calculate the concentration of the daily standard. Use an equation similar to 25E–2 to calculate the percent difference between the daily standard and C_s. If the difference is within 5 percent, then the previous values for k and b may be used. Otherwise, use the procedures in Section 6.1.1 to recalibrate the FID.

7. Calculations

7.1 Nomenclature.

A = Measurement of the area under the response curve, counts.
b = y-intercept of the linear regression line.
C_a = Measured vapor phase organic concentration of sample, ppm as propane.
C_{ma} = Average measured vapor phase organic concentration of standard, ppm as propane.
C_m = Measured vapor phase organic concentration of standard, ppm as propane.
C_s = Calculated standard concentration, ppm as propane.
k = Slope of the linear regression line.
P_{bar} = Atmospheric pressure at analysis conditions, mm Hg (in. Hg).
P* = Organic vapor pressure in the sample, kPa (psi).
β = 1.333 X 10^{-7} kPa/[(mm Hg)(ppm)], (4.91 X 10^{-7} psi/[(in. Hg)(ppm)])

7.2 Linearity. Use the following equation to calculate the measured standard concentration for each standard vial.

$C_m = k A + b$ Eq. 25E–1

7.2.1 Calculate the average measured standard concentration (C_{ma}) for each set of triplicate standards and use the following equation to calculate the percent difference (PD) between C_{ma} and C_s.

$$PD = \frac{C_s - C_{ma}}{C_s} \times 100 \qquad \text{Eq. 25E-2}$$

The instrument linearity is acceptable if the percent difference is within five for each standard.

7.3 Relative Standard Deviation (RSD). Use the following equation to calculate the RSD for each triplicate set of standards.

$$RSD = \frac{100}{C_{ma}} \sqrt{\frac{\sum (C_m - C_{ma})^2}{2}} \qquad \text{Eq. 25E-3}$$

The calibration is acceptable if the RSD is within five for each standard concentration.

7.4 Concentration of organics in the headspace. Use the following equation to calculate the concentration of vapor phase organics in each sample.

$C_a = k A + b$ Eq. 25E–4

7.5 Vapor Pressure of Organics in the Headspace Sample. Use the following equation to calculate the vapor pressure of organics in the sample.

$P^* = \beta P_{bar} C_a$ Eq. 25E–5

METHOD 26—DETERMINATION OF HYDROGEN CHLORIDE EMISSIONS FROM STATIONARY SOURCES

1. Applicability, Principle, Interferences, Precision, Bias, and Stability

1.1 Applicability. This method is applicable for determining emissions of hydrogen halides (HX) [hydrogen chloride (HCl), hydrogen bromide (HBr), and hydrogen fluoride (HF)] and halogens (X_2) [chlorine (Cl_2) and bromine (Br_2)] from stationary sources. Sources, such as those controlled by wet scrubbers, that emit acid particulate matter must be sampled using Method 26A.

NOTE: Mention of trade names or specific products does not constitute endorsement by the Environmental Protection Agency.]

1.2 Principle. An integrated sample is extracted from the source and passed through

a prepurged heated probe and filter into dilute sulfuric acid and dilute sodium hydroxide solutions which collect the gaseous hydrogen halides and halogens, respectively. The filter collects other particulate matter including halide salts. The hydrogen halides are solubilized in the acidic solution and form chloride (Cl^-), bromide (Br^-), and fluoride (F^-) ions. The halogens have a very low solubility in the acidic solution and pass through to the alkaline solution where they are hydrolyzed to form a proton (H^+), the halide ion, and the hypohalous acid (HClO or HBrO). Sodium thiosulfate is added in excess to the alkaline solution to assure reaction with the hypohalous acid to form a second halide ion such that 2 halide ions are formed for each molecule of halogen gas. The halide ions in the separate solutions are measured by ion chromatography (IC).

1.3 Interferences. Volatile materials, such as chlorine dioxide (ClO_2) and ammonium chloride (NH_4Cl), which produce halide ions upon dissolution during sampling are potential interferents. Interferents for the halide measurements are the halogen gases which disproportionate to a hydrogen halide and a hydrohalous acid upon dissolution in water. However, the use of acidic rather than neutral or basic solutions for collection of the hydrogen halides greatly reduces the dissolution of any halogens passing through this solution. The simultaneous presence of HBr and CL_2 may cause a positive bias in the HCL result with a corresponding negative bias in the Cl_2 result as well as affecting the HBr/Br_2 split. High concentrations of nitrogen oxides (NO_X) may produce sufficient nitrate (NO_3-) to interfere with measurements of very low Br^- levels.

1.4 Precision and Bias. The within-laboratory relative standard deviations are 6.2 and 3.2 percent at HCl concentrations of 3.9 and 15.3 ppm, respectively. The method does not exhibit a bias to Cl_2 when sampling at concentrations less than 50 ppm.

1.5 Sample Stability. The collected Cl^- samples can be stored for up to 4 weeks.

1.6 Detection Limit. The analytical detection limit for Cl^- is 0.1 µg/ml. Detection limits for the other analyses should be similar.

2. Apparatus

2.1 Sampling. The sampling train is shown in Figure 26–1, and component parts are discussed below.

2.1.1 Probe. Borsilicate glass, approximately 3/8-in. (9-mm) I.D. with a heating system to prevent moisture condensation. A Teflon-glass filter in a mat configuration shall be installed behind the probe to remove particulate matter from the gas stream (see section 2.1.5). A glass wool plug should *not* be used to remove particulate matter since a negative bias in the data could result.

2.1.2 Three-Way Stopcock. A borosilicate glass three-way stopcock with a heating system to prevent moisturecondensation. The heated stopcock should connect to the outlet of the heated filter and the inlet of the first impinger. The heating system shall be capable of preventing condensation up to the inlet of the first impinger. Silicone grease may be used, if necessary, to prevent leakage.

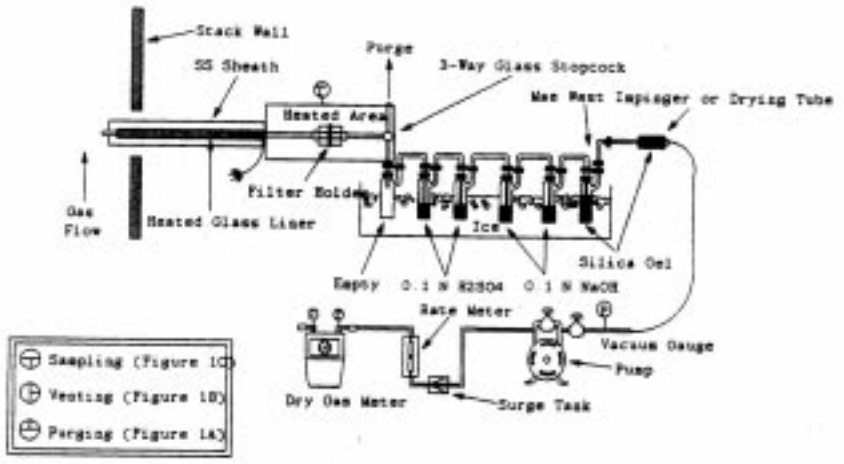

Figure 26-1. Sampling train.

2.1.3 Impingers. Four 30-ml midget impingers with leak-free glass connectors. Silicone grease may be used, if necessary, to prevent leakage. For sampling at high moisture sources or for sampling times greater than 1 hour, a midget impinger with a shortened stem (such that the gas sample does not bubble through the collected condensate) should be used in front of the first impinger.

2.1.4 Drying Tube or Impinger. Tube or impinger, of Mae West design, filled with 6- to 16-mesh indicating type silica gel, or equivalent, to dry the gas sample and to protect the dry gas meter and pump. If the silica gel has been used previously, dry at 175 °C (350 °F) for 2 hours. New silica gel may be used as received. Alternatively, other types of desiccants (equivalent or better) may be used.

2.1.5 Filter. When the stack gas temperature exceeds 210 °C (410 °F) and the HCl concentration is greater than 20 ppm, a quartz-fiber filter may be used.

2.1.6 Filter Holder and Support. The filter holder should be made of Teflon or quartz. The filter support shall be made of Teflon. All-Teflon filter holders and supports are available from Savillex Corp., 5325 Hwy 101, Minnetonka, MN 55345.

2.1.7 Sample Line. Leak-free, with compatible fittings to connect the last impinger to the needle valve.

2.1.8 Rate Meter. Rotameter, or equivalent, capable of measuring flow rate to within 2 percent of the selected flow rate of 2 liters/min.

2.1.9 Purge Pump, Purge Line, Drying Tube, Needle Valve, and Rate Meter. Pump capable of purging the sampling probe at 2 liters/min, with drying tube, filled with silica gel or equivalent, to protect pump, and a rate meter capable of measuring 0 to 5 liters/min.

2.1.10 Stopcock Grease, Valve, Pump, Volume Meter, Barometer, and Vacuum Gauge. Same as in Method 6, Sections 2.1.4, 2.1.7, 2.1.8, 2.1.10, 2.1.11, and 2.1.12.

2.1.11 Temperature Measuring Devices. Temperature measuring device to monitor the temperature of the probe and a thermometer or other temperature measuring device to monitor the temperature of the sampling system from the outlet of the probe to the inlet of the first impinger.

2.1.12 Ice Water Bath. To minimize loss of absorbing solution.

2.2 Sample Recovery.

2.2.1 Wash Bottles. Polyethylene or glass, 500-ml or larger, two.

2.2.2 Storage Bottles. 100- or 250-ml, high-density polyethylene bottles with Teflon® screw cap liners to store impinger samples.

2.3 Sample Preparation and Analysis. The materials required for volumetric dilution and chromatographic analysis of samples are described below.

2.3.1 Volumetric Flasks. Class A, 100-ml size.

2.3.2 Volumetric Pipets. Class A, assortment. To dilute samples into the calibration range of the instrument.

2.3.3 Ion Chromatograph. Suppressed or nonsuppressed, with a conductivity detector and electronic integrator operating in the peak area mode. Other detectors, strip chart recorders, and peak height measurements may be used.

3. Reagents

Unless otherwise indicated, all reagents must conform to the specifications established by the Committee on Analytical Reagents of the American Chemical Society (ACS reagent grade). When such specifications are not available, the best available grade shall be used.

3.1 Sampling.

3.1.1 Water. Deionized, distilled water that conforms to ASTM Specification D 1193–77, Type 3.

3.1.2 Acidic Absorbing solution, 0.1 N Sulfuric Acid (H_2SO_4). To prepare 100 ml of the absorbing solution for the front impinger pair, slowly add 0.28 ml of concentrated H_2SO_4 to about 90 ml of water while stirring, and adjust the final volume to 100 ml using additional water. Shake well to mix the solution.

3.1.3 Alkaline Absorbing Solution, 0.1 N Sodium Hydroxide (NaOH). To prepare 100 ml of the scrubber solution for the back pair of impingers, dissolve 0.40 g of solid NaOH in about 90 ml of water, and adjust the final solution volume to 100 ml using additional water. Shake well to mix the solution.

3.1.4 Sodium Thiosulfate ($Na_2S_2O_3.5H_2O$)

3.2 Sample Preparation and Analysis.

3.2.1 Water. Same as in Section 3.1.1.

3.2.2 Absorbing Solution Blanks. A separate blank solution of each absorbing reagent should be prepared for analysis with the field samples. Dilute 30 ml of each absorbing solution to approximately the same final volume as the field samples using the blank sample of rinse water.

3.2.3 Halide Salt Stock Standard Solutions. Prepare concentrated stock solutions from reagent grade sodium chloride (NaCl), sodium bromide (NaBr), and sodium fluoride (NaF). Each must be dried at 110 °C for two or more hours and then cooled to room temperature in a desiccator immediately before weighing. Accurately weigh 1.6 to 1.7 g of the dried NaCl to within 0.1 mg, dissolve in water, and dilute to 1 liter. Calculate the exact Cl^- concentration using Equation 26–1.

$$\mu g\ Cl^-/ml = g\ of\ NaCl \times 10^3 \times 35.453/58.44$$

Eq. 26–1

In a similar manner, accurately weigh and solubilize 1.2 to 1.3 g of dried NaBr and 2.2 to 2.3 g of NaF to make 1-liter solutions. Use Equations 26–2 and 26–3 to calculate the Br^- and F^- concentrations.

$$\mu g\ Br^-/ml = g\ of\ NaBr \times 10^3 \times 79.904/102.90$$

Eq. 26–2

$$\mu g\ F^-/ml = g\ of\ NaF \times 10^3 \times 18.998/41.99$$

Eq. 26–3

Alternately, solutions containing a nominal certified concentration of 1000 mg/l NaCl are commercially available as convenient stock solutions from which standards can be made by appropriate volumetric dilution. Refrigerate the stock standard solutions and store no longer than one month.

3.2.4 Chromatographic Eluent. Effective eluents for nonsuppressed IC using a resin- or silica-based weak ion exchange column are a 4 mM potassium hydrogen phthalate solution, adjusted to pH 4.0 using a saturated sodium borate solution, and a 4 mM 4-hydroxy benzoate solution, adjusted to pH 8.6 using 1 N NaOH. An effective eluent for suppressed ion chromatography is a solution containing 3 mM sodium bicarbonate and 2.4 mM sodium carbonate. Other dilute solutions buffered to a similar pH and containing no interfering ions may be used. When using suppressed ion chromatography, if the ''water dip'' resulting from sample injection interferes with the chloride peak, use a 2 mM NaOH/2.4 mM sodium bicarbonate eluent.

4. Procedure

4.1 Sampling.

4.1.1 Preparation of Collection Train. Prepare the sampling train as follows: Pour 15 ml of the acidic absorbing solution into each one of the first pair of impingers, and 15 ml of the alkaline absorbing solution into each one of the second pair of impingers. Connect the impingers in series with the knockout impinger first, if used, followed by the two impingers containing the acidic absorbing solution and the two impingers containing the alkaline absorbing solution. Place a fresh charge of silica gel, or equivalent, in the drying tube or impinger at the end of the impinger train.

4.1.2 Adjust the probe temperature and the temperature of the filter and the stopcock, i.e., the heated area in Figure 26–1 to a temperature sufficient to prevent water condensation. This temperature should be at least 20°C above the source temperature, but not greater than 120 °C. The temperature should be monitored throughout a sampling run to ensure that the desired temperature is maintained.

4.1.3 Leak-Check Procedure. A leak-check prior to the sampling run is optional; however, a leak-check after the sampling run is mandatory. The leak-check procedure is as follows: Temporarily attach a suitable (e.g., 0–40 cc/min) rotameter to the outlet of the dry gas meter and place a vacuum gauge at or near the probe inlet. Plug the probe inlet, pull a vacuum of at least 250 mm Hg (10 in. Hg), and note the flow rate as indicated by the rotameter. A leakage rate not in excess of 2 percent of the average sampling rate is acceptable. (*NOTE:* Carefully release the probe inlet plug before turning off the

pump.) It is suggested (not mandatory) that the pump be leak-checked separately, either prior to or after the sampling run. If done prior to the sampling run, the pump leak-check shall precede the leak-check of the sampling train described immediately above; if done after the sampling run, the pump leak-check shall follow the train leak-check. To leak-check the pump, proceed as follows: Disconnect the drying tube from the probe-impinger assembly. Place a vacuum gauge at the inlet to either the drying tube or pump, pull a vacuum of 250 mm (10 in.) Hg, plug or pinch off the outlet of the flowmeter, and then turn off the pump. The vacuum should remain stable for at least 30 sec. Other leak-check procedures may be used, subject to the approval of the Administrator, U.S. Environmental Protection Agency.

4.1.4 Purge Procedure. Immediately before sampling, connect the purge line to the stopcock, and turn the stopcock to permit the purge pump to purge the probe (see Figure 1A of Figure 26–1). Turn on the purge pump, and adjust the purge rate to 2 liters/min. Purge for at least 5 minutes before sampling.

4.1.5 Sample Collection. Turn on the sampling pump, pull a slight vacuum of approximately 25 mm Hg (1 in. Hg) on the impinger train, and turn the stopcock to permit stack gas to be pulled through the impinger train (see Figure 1C of Figure 26–1). Adjust the sampling rate to 2 liters/min, as indicated by the rate meter, and maintain this rate to within 10 percent during the entire sampling run. Take readings of the dry gas meter volume and temperature, rate meter, and vacuum gauge at least once every 5 minutes during the run. A sampling time of 1 hour is recommended. Shorter sampling times may introduce a significant negative bias in the HCl concentration. At the conclusion of the sampling run, remove the train from the stack, cool, and perform a leak-check as described in section 4.1.2.

4.2 Sample Recovery. Disconnect the impingers after sampling. Quantitatively transfer the contents of the acid impingers and the knockout impinger, if used, to a leak-free storage bottle. Add the water rinses of each of these impingers and connecting glassware to the storage bottle. Repeat this procedure for the alkaline impingers and connecting glassware using a separate storage bottle. Add 25 mg sodium thiosulfate per the product of ppm of halogen anticipated to be in the stack gas times the dscm stack gas sampled. [Note: This amount of sodium thiosulfate includes a safety factor of approximately 5 to assure complete reaction with the hypohalous acid to form a second Cl^- ion in the alkaline solution.] Save portions of the absorbing reagents (0.1 N H_2SO_4 and 0.1 N NaOH) equivalent to the amount used in the sampling train (these are the absorbing solution blanks described in Section 3.2.2); dilute to the approximate volume of the corresponding samples using rinse water directly from the wash bottle being used. Add the same amount of sodium thiosulfate solution to the 0.1 N NaOH absorbing solution blank. Also, save a portion of the rinse water used to rinse the sampling train. Place each in a separate, prelabeled storage bottle. The sample storage bottles should be sealed, shaken to mix, and labeled. Mark the fluid level.

4.3 Sample Preparation for Analysis. Note the liquid levels in the storage bottles and confirm on the analysis sheet whether or not leakage occurred during transport. If a noticeable leakage has occurred, either void the sample or use methods, subject to the approval of the Administrator, to correct the final results. Quantitatively transfer the sample solutions to 100-ml volumetric flasks, and dilute to 100 ml with water.

4.4 Sample Analysis.

4.4.1 The IC conditions will depend upon analytical column type and whether suppressed or nonsuppressed IC is used. An example chromatogram from a nonsuppressed system using a 150-mm Hamilton PRP–X100 anion column, a 2 ml/min flow rate of 4 mM 4-hydroxy benzoate solution adjusted to a pH of 8.6 using 1 N NaOH, a 50-µl sample loop, and a conductivity detector set on 1.0 µS full scale is shown in Figure 26–2.

4.4.2 Before sample analysis, establish a stable baseline. Next, inject a sample of water, and determine if any Cl^-, Br^-, or F^- appears in the chromatogram. If any of these ions are present, repeat the load/injection procedure until they are no longer present. Analysis of the acid and alkaline absorbing solution samples requires separate standard calibration curves; prepare each according to Section 5.2. Ensure adequate baseline separation of the analyses.

4.4.3 Between injections of the appropriate series of calibration standards, inject in duplicate the reagent blanks, quality control sample, and the field samples. Measure the areas or heights of the Cl^-, Br^-, and F^- peaks. Use the mean response of the duplicate injections to determine the concentrations of the field samples and reagent blanks using the linear calibration curve. The values from duplicate injections should agree within 5 percent of their mean for the analysis to be valid. Dilute any sample and the blank with equal volumes of water if the concentration exceeds that of the highest standard.

4.5 Audit Analysis. An audit sample must be analyzed, subject to availability.

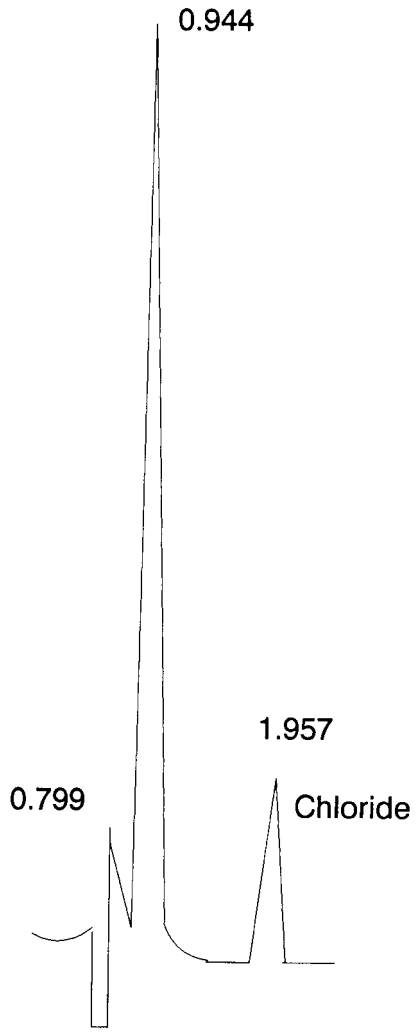

Figure 26-2. Example Chromatogram

5. Calibration

5.1 Dry Gas Metering System. Thermometers, Rate Meter, and Barometer. Same as in Method 6, sections 5.1, 5.2, 5.3, and 5.4.

5.2 Ion Chromatograph. To prepare the calibration standards, dilute given amounts (1.0 ml or greater) of the stock standard solutions to convenient volumes, using 0.1 N H_2SO_2 or 0.1 N NaOH, as appropriate. Prepare at least four calibration standards for each absorbing reagent containing the appropriate stock solutions such that they are within the linear range of the field samples. Using one of the standards in each series, ensure adequate baseline separation for the peaks of interest. Inject the appropriate series of calibration standards, starting with the lowest concentration standard first both before and after injection of the quality control check sample, reagent blanks, and field samples. This allows compensation for any instrument drift occurring during sample analysis.

Determine the peak areas, or heights, for the standards and plot individual values versus halide ion concentrations in µg/ml. Draw a smooth curve through the points. Use linear regression to calculate a formula describing the resulting linear curve.

6. Quality Assurance

6.1 Applicability. When the method is used to analyze samples to demonstrate compliance with a source emission regulation, a set of two audit samples must be analyzed.

6.2 Audit Procedure. The audit sample are chloride solutions. Concurrently analyze the two audit samples and a set of compliance samples in the same manner to evaluate the technique of the analyst and the standards preparation. The same analyst, analytical reagents, and analytical system shall be used both for compliance samples and the EPA audit samples. If this condition is met, auditing the subsequent compliance analyses for the same enforcement agency within 30 days is not required. An audit sample set may not be used to validate different sets of compliance samples under the jurisdiction of different enforcement agencies, unless prior arrangements are made with both enforcement agencies.

6.3 Audit Sample Availability. The audit samples may be obtained by writing or calling the EPA Regional Office or the appropriate enforcement agency. The request for the audit samples must be made at least 30 days prior to the scheduled compliance sample analyses.

6.4 Audit Results.

6.4.1 Calculate the concentrations in mg/dscm using the specified sample volume in the audit instructions.

NOTE: Indication of acceptable results may be obtained immediately by reporting the audit results in mg/dscm and compliance results in total µg HCl/sample to the responsible enforcement agency. Include the results of both audit samples, their identification numbers, and the analyst's name with the results of the compliance determination samples in appropriate reports to the EPA Regional Office or the appropriate enforcement agency. Include this information with subsequent analyses for the same enforcement agency during the 30-day period.

6.4.2 The concentrations of the audit samples obtained by the analyst shall agree within 10 percent of the actual concentrations. If the 10 percent specification is not met, reanalyze the compliance samples and audit samples, and include initial and reanalysis values in the test report.

6.4.3 Failure to meet the 10 percent specification may require retests until the audit problems are resolved. However, if the audit results do not affect the compliance or noncompliance status of the affected facility, the Administrator may waive the reanalysis requirement, further audits, or retests and accept the results of the compliance test. While steps are being taken to resolve audit analysis problems, the Administrator may also choose to use the data to determine the compliance or noncompliance status of the affected facility.

7. Calculations

Retain at least one extra decimal figure beyond those contained in the available data in intermediate calculations, and round off only the final answer appropriately.

7.1 Sample Volume, Dry Basis, Corrected to Standard Conditions. Calculate the sample volume using Eq. 6–1 of Method 6.

7.2 Total μg HCl, HBr, or HF Per Sample.

$$m_{HX}=K\ V_s\ (S_X^- - B_X^-) \qquad \text{Eq. 26–4}$$

where:

B_X^-=Mass concentration of applicable absorbing solution blank, μg halide ion (Cl^-, Br^-, F^-)/ml, not to exceed 1 μg/ml which is 10 times the published analytical detection limit of 0.1 μg/ml.

m_{HX}=Mass of HCl, HBr, or HF in sample, μg.

S_X^-=Analysis of sample, μg halide ion (Cl^-, Br^-, F^-)/ml.

V_s=Volume of filtered and diluted sample, ml.

K_{HCl}=1.028 (μg HCl/μg−mole)/(μg Cl^-/μg−mole).

K_{HBr}=1.013 (μg HBr/μg−mole)/(μg Br^-/μg−mole).

K_{HF}=1.053 (μg HF/μg−mole)/(μg F^-/μg−mole).

7.3 Total μg Cl_2 or Br_2 Per Sample.

$$m_{X2}=V_s\ (S_X^- - B_X^-) \qquad \text{Eq. 26–5}$$

where:

m_{X2}=Mass of Cl_2 or Br_2 in sample, μg.

7.4 Concentration of Hydrogen Halide or Halogen in Flue Gas.

$$C=K\ m_{HX,X2}/V_{m(std)} \qquad \text{Eq. 26–6}$$

where:

C=Concentration of hydrogen halide (HX) or halogen (X_2), dry basis, mg/dscm.

$V_{m(std)}$= Dry gas volume measured by the dry gas meter, corrected to standard conditions, dscm.

$K=10^{-3}$ mg/μg.

8. Bibliography

1. Steinsberger, S.C. and J.H. Margeson, ''Laboratory and Field Evaluation of a Methodology for Determination of Hydrogen Chloride Emissions form Municipal and Hazardous Waste Incinerators,'' U.S. Environmental Protection Agency, Office of Research and Development, Report No. 600/3–89/064, April 1989. Available from the National Technical Information Service, Springfield, VA 22161 as PB89220586/AS.

2. State of California, Air Resources Board. Method 421. ''Determination of Hydrochloric Acid Emissions from Stationary Sources.'' March 18, 1987.

3. Cheney, J.L. and C.R. Fortune. Improvements in the Methodology for Measuring Hydrochloric Acid in Combustion Source Emissions. J. Environ. Sci. Health. *A19*(3): 337–350. 1984.

4. Stern, D. A., B. M. Myatt, J. F. Lachowski, and K. T. McGregor. Speciation of Halogen and Hydrogen Halide Compounds in Gaseous Emissions. In: Incineration and Treatment of Hazardous Waste: Proceedings of the 9th Annual Research Symposium, Cincinnati, Ohio, May 2–4, 1983. Publication No. 600/9–84–015. July 1984. Available from National Technical Information Service, Springfield, VA 22161 as PB84–234525.

5. Holm, R. D. and S. A. Barksdale. Analysis of Anions in Combustion Products. In: Ion Chromatographic Analysis of Environmental Pollutants. E. Sawicki, J. D. Mulik, and E. Wittgenstein (eds.). Ann Arbor, Michigan, Ann Arbor Science Publishers. 1978. pp. 99–110.

Method 26A—Determination of Hydrogen Halide and Halogen Emissions from Stationary Sources—Isokinetic Method

1. Applicability, Principle, Interferences, Precision, Bias, and Stability

1.1 Applicability. This method is applicable for determining emissions of hydrogen halides (HX) [hydrogen chloride (HCl), hydrogen bromide (HBr), and hydrogen fluoride (HF)] and halogens (X_2) [chlorine (Cl_2) and bromine (Br_2)] from stationary sources. This method collects the emission sample isokinetically and is therefore particularly suited for sampling at sources, such as those controlled by wet scrubbers, emitting acid particulate matter (e.g., hydrogen halides dissolved in water droplets). [Note: Mention of trade names or specific products does not constitute endorsement by the Environmental Protection Agency.]

1.2 Principle. Gaseous and particulate pollutants are withdrawn isokinetically from the source and collected in an optional cyclone, on a filter, and in absorbing solutions. The cyclone collects any liquid droplets and is not necessary if the source emissions do not contain them; however, it is preferable

to include the cyclone in the sampling train to protect the filter from any moisture present. The filter collects other particulate matter including halide salts. Acidic and alkaline absorbing solutions collect the gaseous hydrogen halides and halogens, respectively. Following sampling of emissions containing liquid droplets, any halides/halogens dissolved in the liquid in the cyclone and on the filter are vaporized to gas and collected in the impingers by pulling conditioned ambient air through the sampling train. The hydrogen halides are solubilized in the acidic solution and form chloride (Cl^-), bromide (Br^-), and fluoride (F^-) ions. The halogens have a very low solubility in the acidic solution and pass through to the alkaline solution where they are hydrolyzed to form a proton ($H^=$), the halide ion, and the hypohalous acid (HClO or HBrO). Sodium thiosulfate is added to the alkaline solution to assure reaction with the hypohalous acid to form a second halide ion such that 2 halide ions are formed for each molecule of halogen gas. The halide ions in the separate solutions are measured by ion chromatography (IC). If desired, the particulate matter recovered from the filter and the probe is analyzed following the procedures in Method 5. [NOTE: If the tester intends to use this sampling arrangement to sample concurrently for particulate matter, the alternative Teflon^R probe liner, cyclone, and filter holder should not be used. The Teflon^R filter support must be used. The tester must also meet the probe and filter temperature requirements of both sampling trains.]

1.3 Interferences. Volatile materials, such as chlorine dioxide (ClO_2) and ammonium chloride (NH_4Cl), which produce halide ions upon dissolution during sampling are potential interferents. Interferents for the halide measurements are the halogen gases which disproportionate to a hydrogen halide and an hypohalous acid upon dissolution in water. The use of acidic rather than neutral or basic solutions for collection of the hydrogen halides greatly reduces the dissolution of any halogens passing through this solution. The simultaneous presence of both HBr and $C1_2$ may cause a positive bias in the HCl result with a corresponding negative bias in the $C1_2$ result as well as affecting the HBr/Br_2 split. High concentrations of nitrogen oxides (NO_x) may produce sufficient nitrate (NO_3-) to interfere with measurements of very low Br- levels.

1.4 Precision and Bias. The method has a possible measurable negative bias below 20 ppm HCl perhaps due to reaction with small amounts of moisture in the probe and filter. Similar bias for the other hydrogen halides is possible.

1.5 Sample Stability. The collected Cl^- samples can be stored for up to 4 weeks for analysis for HCl and $C1_2$.

1.6 Detection Limit. The in-stack detection limit for HCl is approximately 0.02µg per liter of stack gas; the analytical detection limit for HCl is 0.1 1µg/ml. Detection limits for the other analyses should be similar.

2. Apparatus

2.1 Sampling. The sampling train is shown in Figure 26A–1; the apparatus is similar to the Method 5 train where noted as follows:

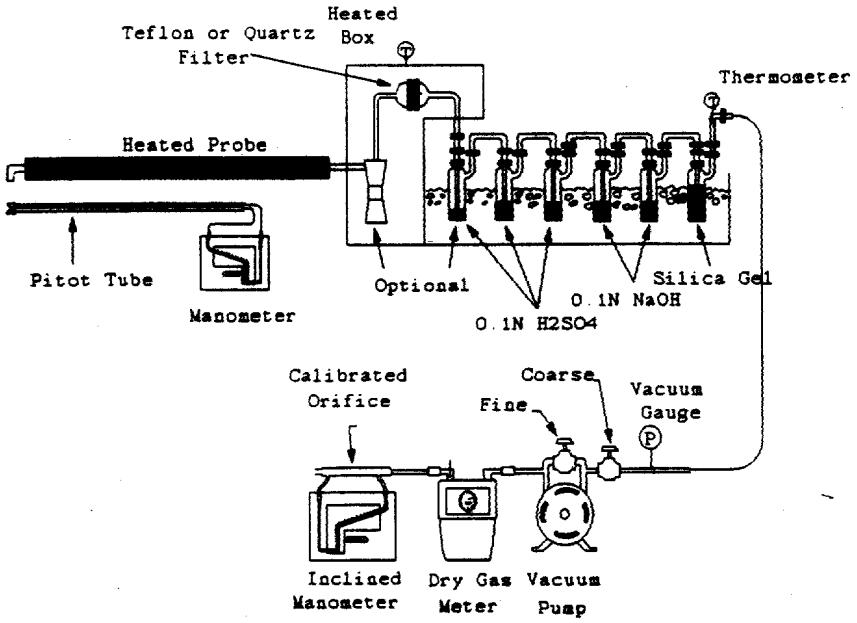

Figure 26A-1. Sampling Train

2.1.1 Probe Nozzle. Borosilicate or quartz glass; constructed and calibrated according to Method 5, Sections 2.1.1 and 5.1, and coupled to the probe liner using a Teflon ® union; a stainless steel nut is recommended for this union. When the stack temperature exceeds 210 °C (410 °F), a one-piece glass nozzle/liner assembly must be used.

2.1.2 Probe Liner. Same as Method 5, Section 2.1.2, except metal liners shall not be used. Water-cooling of the stainless steel sheath is recommended at temperatures exceeding 500 °C. Teflon ® may be used in limited applications where the minimum stack temperature exceeds 120 °C (250 °F) but never exceeds the temperature where Teflon® is estimated to become unstable (approximately 210 °C).

2.1.3 Pitot Tube, Differential Pressure Gauge, Filter Heating System, Metering System, Barometer, Gas Density Determination Equipment. Same as Method 5, Sections 2.1.3, 2.1.4, 2.1.6, 2.1.8, 2.1.9, and 2.1.10.

2.1.4 Cyclone (Optional). Glass or Teflon ®. Use of the cyclone is required only when the sample gas stream is saturated with moisture; however, the cyclone is recommended to protect the filter from any moisture droplets present.

2.1.5 Filter Holder. Borosilicate or quartz glass, or Teflon® filter holder, with a Teflon® filter support and a sealing gasket. The sealing gasket shall be constructed of Teflon® or equivalent materials. The holder design shall provide a positive seal against leakage at any point along the filter circumference. The holder shall be attached immediately to the outlet of the cyclone.

2.1.6 Impinger Train. The following system shall be used to determine the stack gas moisture content and to collect the hydrogen halides and halogens: five or six impingers connected in series with leak-free ground glass fittings or any similar leak-free noncontaminating fittings. The first impinger shown in Figure 26A–1 (knockout or condensate impinger) is optional and is recommended as a water knockout trap for use under high moisture conditions. If used, this impinger should be constructed as described below for the alkaline impingers, but with a shortened stem, and should contain 50 ml of 0.1 N H_2SO_4. The following two impingers (acid impingers which each contain 100 ml of 0.1 N H_2SO_4) shall be of the Greenburg-Smith design with the standard tip (Method 5, Section 2.1.7). The next two impingers (alkaline impingers which each contain 100 ml of 0.1 N

NaOH) and the last impinger (containing silica gel) shall be of the modified Greenburg-Smith design (Method 5, Section 2.1.7). The condensate, acid, and alkaline impingers shall contain known quantities of the appropriate absorbing reagents. The last impinger shall contain a known weight of silica gel or equivalent desiccant. Teflon® impingers are an acceptable alternative.

2.1.7 Ambient Air Conditioning Tube (Optional). Tube tightly packed with approximately 150 g of fresh 8 to 20 mesh sodium hydroxide-coated silica, or equivalent, (Ascarite II® has been found suitable) to dry and remove acid gases from the ambient air used to remove moisture from the filter and cyclone, when the cyclone is used. The inlet and outlet ends of the tube should be packed with at least 1-cm thickness of glass wool or filter material suitable to prevent escape of fines. Fit one end with flexible tubing, etc. to allow connection to probe nozzle following the test run.

2.2 Sample Recovery. The following items are needed:

2.2.1 Probe-Liner and Probe-Nozzle Brushes, Wash Bottles,

Glass Sample Storage Containers, Petri Dishes, Graduated Cylinder or Balance, and Rubber Policeman. Same as Method 5, Sections 2.2.1, 2.2.2, 2.2.3, 2.2.4, 2.2.5, and 2.2.7.

2.2.2 Plastic Storage Containers. Screw-cap polypropylene or polyethylene containers to store silica gel. High-density polyethylene bottles with Teflon screw cap liners to store impinger reagents, 1-liter.

2.2.3 Funnels. Glass or high-density polyethylene, to aid in sample recovery.

2.3 Analysis. For analysis, the following equipment is needed:

2.3.1 Volumetric Flasks. Class A, various sizes.

2.3.2 Volumetric Pipettes. Class A, assortment, to dilute samples to calibration range of the ion chromatograph (IC).

2.3.3 Ion Chromatograph. Suppressed or nonsuppressed, with a conductivity detector and electronic integrator operating in the peak area mode. Other detectors, a strip chart recorder, and peak heights may be used.

3. Reagents

Unless otherwise indicated, all reagents must conform to the specifications of the Committee on Analytical Reagents of the American Chemical Society (ACS reagent grade). When such specifications are not available, the best available grade shall be used.

3.1 Sampling.

3.1.1 Water. Deionized, distilled water that conforms to American Society of Testing and Materials (ASTM) Specification D 1193–77, Type 3 (incorporated by reference as specified in §60.17).

3.1.2 Acidic Absorbing Solution, 0.1 N Sulfuric Acid (H_2SO_4). To prepare 1 L, slowly add 2.80 ml of concentrated H_2SO_4 to about 900 ml of water while stirring, and adjust the final volume to 1 L using additional water. Shake well to mix the solution.

3.1.3 Alkaline Absorbing Solution, 0.1 N Sodium Hydroxide (NaOH). To prepare 1 L, dissolve 4.00 g of solid NaOH in about 900 ml of water and adjust the final volume to 1 L using additional water. Shake well to mix the solution.

3.1.4 Filter. Teflon® mat (e.g., Pallflex® TX40H145) filter. When the stack gas temperature exceeds 210 °C (410 °F) a quartz fiber filter may be used.

3.1.5 Silica Gel, Crushed Ice, and Stopcock Grease. Same as Method 5, Sections 3.1.2, 3.1.4, and 3.1.5, respectively.

3.1.6 Sodium Thiosulfate, ($Na_2S_2O_3 3.5H_2O$).

3.2 Sample Recovery

3.2.1 Water. Same as Section 3.1.1.

3.2.2 Acetone. Same as Method 5, Section 3.2.

3.3 Sample Analysis.

3.3.1 Water. Same as Section 3.1.1.

3.3.2 Reagent Blanks. A separate blank solution of each absorbing reagent should be prepared for analysis with the field samples. Dilute 200 ml of each absorbing solution (250 ml of the acidic absorbing solution, if a condensate impinger is used) to the same final volume as the field samples using the blank sample of rinse water. If a particulate determination is conducted, collect a blank sample of acetone.

3.3.3 Halide Salt Stock Standard Solutions. Prepare concentrated stock solutions from reagent grade sodium chloride (NaCl), sodium bromide (NaBr), and sodium fluoride (NaF). Each must be dried at 110 °C for 2 or more hours and then cooled to room temperature in a desiccator immediately before weighing. Accurately weigh 1.6 to 1.7 g of the dried NaCl to within 0.1 mg, dissolve in water, and dilute to 1 liter. Calculate the exact Cl^- concentration using Equation 26A–1.

$$\mu g\ Cl^-/ml = g\ of\ NaCl \times 10^3 \times 35.453/58.44 \quad \text{Eq. 26A–1}$$

In a similar manner, accurately weigh and solubilize 1.2 to 1.3 g of dried NaBr and 2.2 to 2.3 g of NaF to make 1-liter solutions. Use Equations 26A–2 and 26A–3 to calculate the Br^- and F^- concentrations.

$$\mu g\ Br^-/ml = g\ of\ NaBr \times 10^3 \times 79.904/102.90 \quad \text{Eq. 26A–2}$$

$$\mu g\ F^-/ml = g\ of\ NaF \times 10^3 \times 18.998/41.99 \quad \text{Eq. 26A–3}$$

Alternately, solutions containing a nominal certified concentration of 1000 mg/L NaCl are commercially available as convenient stock solutions from which standards can be made by appropriate volumetric dilution.

Refrigerate the stock standard solutions and store no longer than 1 month.

3.3.4 Chromatographic Eluent. Same as Method 26, Section 3.2.4.

4. Procedure

Because of the complexity of this method, testers and analysts should be trained and experienced with the procedures to ensure reliable results.

4.1 Sampling.

4.1.1 Pretest Preparation. Follow the general procedure given in Method 5, Section 4.1.1, except the filter need only be desiccated and weighed if a particulate determination will be conducted.

4.1.2 Preliminary Determinations. Same as Method 5, Section 4.1.2.

4.1.3 Preparation of Sampling Train. Follow the general procedure given in Method 5, Section 4.1.3, except for the following variations:

Add 50 ml of 0.1 N H_2SO_4 to the condensate impinger, if used. Place 100 ml of 0.1 N H_2SO_4 in each of the next two impingers. Place 100 ml of 0.1 N NaOH in each of the following two impingers. Finally, transfer approximately 200–300 g of preweighed silica gel from its container to the last impinger. Set up the train as in Figure 26A–1. When used, the optional cyclone is inserted between the probe liner and filter holder and located in the heated filter box.

4.1.4 Leak-Check Procedures. Follow the leak-check procedures given in Method 5, Sections 4.4.1 (Pretest Leak-Check), 4.1.4.2 (Leak-Checks During the Sample Run), and 4.1.4.3 (Post-Test Leak-Check).

4.1.5 Train Operation. Follow the general procedure given in Method 5, Section 4.1.5. Maintain a temperature around the filter and (cyclone, if used) of greater than 120 °C (248 °F).

For each run, record the data required on a data sheet such as the one shown in Method 5, Figure 5–2. If the condensate impinger becomes too full, it may be emptied, recharged with 50 ml of 0.1 N H_2SO_4, and replaced during the sample run. The condensate emptied must be saved and included in the measurement of the volume of moisture collected and included in the sample for analysis. The additional 50 ml of absorbing reagent must also be considered in calculating the moisture. After the impinger is reinstalled in the train, conduct a leak-check as described in Method 5, Section 4.1.4.2.

4.1.6 Post-Test Moisture Removal (Optional). When the optional cyclone is included in the sampling train or when moisture is visible on the filter at the end of a sample run even in the absence of a cyclone, perform the following procedure. Upon completion of the test run, connect the ambient air conditioning tube at the probe inlet and operate the train with the filter heating system at least 120 °C (248 °F) at a low flow rate (e.g., Δ H=1 in. H_2O) to vaporize any liquid and hydrogen halides in the cyclone or on the filter and pull them through the train into the impingers. After 30 minutes, turn off the flow, remove the conditioning tube, and examine the cyclone and filter for any visible moisture. If moisture is visible, repeat this step for 15 minutes and observe again. Keep repeating until the cyclone is dry. [Note: It is critical that this is repeated until the cyclone is completely dry.]

4.2 Sample Recovery. Allow the probe to cool. When the probe can be handled safely, wipe off all the external surfaces of the tip of the probe nozzle and place a cap loosely over the tip. Do not cap the probe tip tightly while the sampling train is cooling down because this will create a vacuum in the filter holder, drawing water from the impingers into the holder. Before moving the sampling train to the cleanup site, remove the probe, wipe off any silicone grease, and cap the open outlet of the impinger train, being careful not to lose any condensate that might be present. Wipe off any silicone grease and cap the filter or cyclone inlet. Remove the umbilical cord from the last impinger and cap the impinger. If a flexible line is used between the first impinger and the filter holder, disconnect it at the filter holder and let any condensed water drain into the first impinger. Wipe off any silicone grease and cap the filter holder outlet and the impinger inlet. Ground glass stoppers, plastic caps, serum caps, Teflon® tape, Parafilm®, or aluminum foil may be used to close these openings. Transfer the probe and filter/impinger assembly to the cleanup area. This area should be clean and protected from the weather to minimize sample contamination or loss. Inspect the train prior to and during disassembly and note any abnormal conditions. Treat samples as follows:

4.2.1 Container No. 1 (Optional; Filter Catch for Particulate Determination). Same as Method 5, Section 4.2, Container No. 1.

4.2.2 Container No. 2 (Optional; Front-Half Rinse for Particulate Determination). Same as Method 5, Section 4.2, Container No. 2.

4.2.3 Container No. 3 (Knockout and Acid Impinger Catch for Moisture and Hydrogen Halide Determination). Disconnect the impingers. Measure the liquid in the acid and knockout impingers to ±1 ml by using a graduated cylinder or by weighing it to ±0.5 g by using a balance. Record the volume or weight of liquid present. This information is required to calculate the moisture content of the effluent gas. Quantitatively transfer this liquid to a leak-free sample storage container. Rinse these impingers and connecting glassware including the back portion of the filter holder (and flexible tubing, if used) with water and add these rinses to the storage container. Seal the container, shake to mix, and label. The fluid level should be

marked so that if any sample is lost during transport, a correction proportional to the lost volume can be applied. Retain rinse water and acidic absorbing solution blanks and analyze with the samples.

4.2.4 Container No. 4 (Alkaline Impinger Catch for Halogen and Moisture Determination). Measure and record the liquid in the alkaline impingers as described in Section 4.2.3. Quantitatively transfer this liquid to a leak-free sample storage container. Rinse these two impingers and connecting glassware with water and add these rinses to the container. Add 25 mg of sodium thiosulfate per ppm halogen-dscm of stack gas sampled. [Note: This amount of sodium thiosulfate includes a safety factor of approximately 5 to assure complete reaction with the hypohalous acid to form a second Cl^- ion in the alkaline solution.] Seal the container, shake to mix, and label; mark the fluid level. Retain alkaline absorbing solution blank and analyze with the samples.

4.2.5 Container No. 5 (Silica Gel for Moisture Determination). Same as Method 5, Section 4.2, Container No. 3.

4.2.6 Container Nos. 6 through 9 (Reagent Blanks). Save portions of the absorbing reagents (0.1 N H_2SO_4 and 0.1 N NaOH) equivalent to the amount used in the sampling train; dilute to the approximate volume of the corresponding samples using rinse water directly from the wash bottle being used. Add the same ratio of sodium thiosulfate solution used in container No. 4 to the 0.1 N NaOH absorbing reagent blank. Also, save a portion of the rinse water alone and a portion of the acetone equivalent to the amount used to rinse the front half of the sampling train. Place each in a separate, prelabeled sample container.

4.2.7 Prior to shipment, recheck all sample containers to ensure that the caps are well-secured. Seal the lids of all containers around the circumference with Teflon® tape. Ship all liquid samples upright and all particulate filters with the particulate catch facing upward.

4.3 Sample Preparation and Analysis. Note the liquid levels in the sample containers and confirm on the analysis sheet whether or not leakage occurred during transport. If a noticeable leakage has occurred, either void the sample or use methods, subject to the approval of the Administrator, to correct the final results.

4.3.1 Container Nos. 1 and 2 and Acetone Blank (Optional; Particulate Determination). Same as Method 5, Section 4.3.

4.3.2 Container No. 5. Same as Method 5, Section 4.3 for silica gel.

4.3.3 Container Nos. 3 and 4 and Absorbing Solution and Water Blanks. Quantitatively transfer each sample to a volumetric flask or graduated cylinder and dilute with water to a final volume within 50 ml of the largest sample.

4.3.3.1 The IC conditions will depend upon analytical column type and whether suppressed or nonsuppressed IC is used. Prior to calibration and sample analysis, establish a stable baseline. Next, inject a sample of water, and determine if any Cl^-, Br^-, or F^- appears in the chromatogram. If any of these ions are present, repeat the load/injection procedure until they are no longer present. Analysis of the acid and alkaline absorbing solution samples requires separate standard calibration curves; prepare each according to Section 5.2. Ensure adequate baseline separation of the analyses.

4.3.3.2 Between injections of the appropriate series of calibration standards, inject in duplicate the reagent blanks and the field samples. Measure the areas or heights of the Cl^-, Br^-, and F^- peaks. Use the average response to determine the concentrations of the field samples and reagent blanks using the linear calibration curve. If the values from duplicate injections are not within 5 percent of their mean, the duplicate injection shall be repeated and all four values used to determine the average response. Dilute any sample and the blank with equal volumes of water if the concentration exceeds that of the highest standard.

4.4 Audit Sample Analysis. Audit samples must be analyzed subject to availability.

5. Calibration

Maintain a laboratory log of all calibrations.

5.1 Probe Nozzle, Pitot Tube, Dry Gas Metering System, Probe Heater, Temperature Gauges, Leak-Check of Metering System, and Barometer. Same as Method 5, Sections 5.1, 5.2, 5.3, 5.4, 5.5, 5.6, and 5.7, respectively.

5.2 Ion Chromatograph. To prepare the calibration standards, dilute given amounts (1.0 ml or greater) of the stock standard solutions to convenient volumes, using 0.1 N H_2SO_4 or 0.1 N NaOH, as appropriate. Prepare at least four calibration standards for each absorbing reagent containing the three stock solutions such that they are within the linear range of the field samples. Using one of the standards in each series, ensure adequate baseline separation for the peaks of interest. Inject the appropriate series of calibration standards, starting with the lowest concentration standard first both before and after injection of the quality control check sample, reagent blanks, and field samples. This allows compensation for any instrument drift occurring during sample analysis. Determine the peak areas, or height, of the standards and plot individual values versus halide ion concentrations in µg/ml. Draw a smooth curve through the points. Use linear regression to calculate a formula describing the resulting linear curve.

6. Quality Control

Same as Method 5, Section 4.4.

7. Quality Assurance

7.1 Applicability. When the method is used to demonstrate compliance with a regulation, a set of two audit samples shall be analyzed.

7.2 Audit Procedure. The currently available audit samples are chloride solutions. Concurrently analyze the two audit samples and a set of compliance samples in the same manner to evaluate the technique of the analyst and the standards preparation. The same analyst, analytical reagents, and analytical system shall be used both for compliance samples and the Environmental Protection Agency (EPA) audit samples.

7.3 Audit Sample Availability. Audit samples will be supplied only to enforcement agencies for compliance tests. Audit samples may be obtained by writing the Source Test Audit Coordinator (MD–77B), Quality Assurance Division, Atmospheric Research and Exposure Assessment Laboratory, U.S. Environmental Protection Laboratory, Research Triangle Park, NC 27711 or by calling the Source Test Audit Coordinator (STAC) at (919) 541–7834. The request for the audit samples should be made at least 30 days prior to the scheduled compliance sample analysis.

7.4 Audit Results. Calculate the concentrations in mg/dscm using the specified sample volume in the audit instructions. Include the results of both audit samples, their identification numbers, and the analyst's name with the results of the compliance determination samples in appropriate reports to the EPA regional office or the appropriate enforcement agency. (NOTE: Acceptability of results may be obtained immediately by reporting the audit results in mg/dscm and compliance results in total μg HCl/sample to the responsible enforcement agency.) The concentrations of the audit samples obtained by the analyst shall agree within 10 percent of the actual concentrations. If the 10 percent specification is not met, reanalyze the compliance samples and audit samples, and include initial and reanalysis values in the test report. Failure to meet the 10 percent specification may require retests until the audit problems are resolved.

8. Calculations

Retain at least one extra decimal figure beyond those contained in the available data in intermediate calculations, and round off only the final answer appropriately.

8.1 Nomenclature. Same as Method 5, Section 6.1. In addition:

B_{X-}=Mass concentration of applicable absorbing solution blank, μg halide ion (Cl^-, Br^-, F^-)/ml, not to exceed 1 μg/ml which is 10 times the published analytical detection limit of 0.1 μg/ml. (It is also approximately 5 percent of the mass concentration anticipated to result from a one hour sample at 10 ppmv HCl.)

C=Concentration of hydrogen halide (HX) or halogen (X_2), dry basis, mg/dscm.

m_{HX}=Mass of HCl, HBr, or HF in sample, μg.

m_{X2}=Mass of Cl_2 or Br_2 in sample, μg.

S_{X-}-=Analysis of sample, μg halide ion (Cl^-, Br^-, F^-)/ml.

V_S=Volume of filtered and diluted sample, ml.

8.2 Average Dry Gas Meter Temperature and Average Orifice Pressure Drop. See data sheet (Figure 5–2 of Method 5).

8.3 Dry Gas Volume. Calculate $V_{m(std)}$ and adjust for leakage, if necessary, using the equation in Section 6.3 of Method 5.

8.4 Volume of Water Vapor and Moisture Content. Calculate the volume of water vapor $V_{w(std)}$ and moisture content B_{ws} from the data obtained in this method (Figure 5–2 of Method 5); use Equations 5–2 and 5–3 of Method 5.

8.5 Isokinetic Variation and Acceptable Results. Use Method 5, Sections 6.11 and 6.12.

8.6 Acetone Blank Concentration, Acetone Wash Blank Residue Weight, Particulate Weight, and Particulate Concentration. For particulate determination.

8.7 Total μg HCl, HBr, or HF Per Sample.

$$m_{HX}=K\ V_s\ (S_{X-}-B_{X-}) \qquad \text{Eq. 26A–4}$$

where:

K_{HC1} = 1.028 (μg HCl/μg-mole)/(μg Cl^-/μg-mole).

K_{HBr}=1.013 (μg HBr/μg-mole)/(μg Br^-/μg-mole).

K_{HF}=1.053 (μg HF/μg-mole)/(μg F^-/μg-mole).

8.8 Total μg Cl_2 or Br_2 Per Sample.

$$m_{X2}= V_s\ (S_{X-}-B_{X-}) \qquad \text{Eq. 26A–5}$$

8.9 Concentration of Hydrogen Halide or Halogen in Flue Gas.

$$C=K\ m_{HX,X2}/V_{m(std)} \qquad \text{Eq. 26A–6}$$

where: $K=10^{10-}$ mg/μg

8.10 Stack Gas Velocity and Volumetric Flow Rate. Calculate the average stack gas velocity and volumetric flow rate, if needed, using data obtained in this method and the equations in Sections 5.2 and 5.3 of Method 2.

9. Bibliography

1. Steinsberger, S. C. and J. H. Margeson. Laboratory and Field Evaluation of a Methodology for Determination of Hydrogen Chloride Emissions from Municipal and Hazardous Waste Incinerators. U.S. Environmental Protection Agency, Office of Research and Development. Publication No. 600/3–89/064. April 1989. Available from National Technical Information Service, Springfield, VA 22161 as PB89220586/AS.

2. State of California Air Resources Board. Method 421—Determination of Hydrochloric Acid Emissions from Stationary Sources. March 18, 1987.

3. Cheney, J.L. and C.R. Fortune. Improvements in the Methodology for Measuring Hydrochloric Acid in Combustion Source Emissions. J. Environ. Sci. Health. *A19*(3): 337–350. 1984.

4. Stern, D.A., B.M. Myatt, J.F. Lachowski, and K.T. McGregor. Speciation of Halogen and Hydrogen Halide Compounds in Gaseous Emissions. In: Incineration and Treatment of Hazardous Waste: Proceedings of the 9th Annual Research Symposium, Cincinnati, Ohio, May 2–4, 1983. Publication No. 600/9–84–015. July 1984. Available from National Technical Information Service, Springfield, VA 22161 as PB84–234525.

5. Holm, R.D. and S.A. Barksdale. Analysis of Anions in Combustion Products. In: Ion Chromatographic Analysis of Environmental Pollutants, E. Sawicki, J.D. Mulik, and E. Wittgenstein (eds.). Ann Arbor, Michigan, Ann Arbor Science Publishers. 1978. pp. 99–110.

METHOD 27—DETERMINATION OF VAPOR TIGHTNESS OF GASOLINE DELIVERY TANK USING PRESSURE-VACUUM TEST

1. *Applicability and Principle*

1.1 Applicability. This method is applicable for the determination of vapor tightness of a gasoline delivery tank which is equipped with vapor collection equipment.

1.2 Principle. Pressure and vacuum are applied alternately to the compartments of a gasoline delivery tank and the change in pressure or vacuum is recorded after a specified period of time.

2. *Definitions and Nomenclature*

2.1 Gasoline. Any petroleum distillate or petroleum distillate/alcohol blend having a Reid vapor pressure of 27.6 kilopascals or greater which is used as a fuel for internal combustion engines.

2.2 Delivery Tank. Any container, including associated pipes and fittings, that is attached to or forms a part of any truck, trailer, or railcar used for the transport of gasoline.

2.3 Compartment. A liquid-tight division of a delivery tank.

2.4 Delivery Tank Vapor Collection Equipment. Any piping, hoses, and devices on the delivery tank used to collect and route gasoline vapors either from the tank to a bulk terminal vapor control system or from a bulk plant or service station into the tank.

2.5 Time Period of the Pressure or Vacuum Test (t). The time period of the test, as specified in the appropriate regulation, during which the change in pressure or vacuum is monitored, in minutes.

2.6 Initial Pressure (P_i). The pressure applied to the delivery tank at the beginning of the static pressure test, as specified in the appropriate regulation, in mm H_2O.

2.7 Initial Vacuum (V_i). The vacuum applied to the delivery tank at the beginning of the static vacuum test, as specified in the appropriate regulation, in mm H_2O.

2.8 Allowable Pressure Change (Δp). The allowable amount of decrease in pressure during the static pressure test, within the time period t, as specified in the appropriate regulation, in mm H_2O.

2.9 Allowable Vacuum Change (Δv). The allowable amount of decrease in vacuum during the static vacuum test, within the time period t, as specified in the appropriate regulation, in mm H_2O.

3. *Apparatus*

3.1 Pressure Source. Pump or compressed gas cylinder of air or inert gas sufficient to pressurize the delivery tank to 500 mm H_2O above atmospheric pressure.

3.2 Regulator. Low pressure regulator for controlling pressurization of the delivery tank.

3.3 Vacuum Source. Vacuum pump capable of evacuating the delivery tank to 250 mm H_2O below atmospheric pressure.

3.4 Pressure-Vacuum Supply Hose.

3.5 Manometer. Liquid manometer, or equivalent instrument, capable of measuring up to 500 mm H_2O gauge pressure with ±2.5 mm H_2O precision.

3.6 Pressure-Vacuum Relief Valves. The test apparatus shall be equipped with an in-line pressure-vacuum relief valve set to activate at 675 mm H_2O above atmospheric pressure or 250 mm H_2O below atmospheric pressure, with a capacity equal to the pressurizing or evacuating pumps.

3.7 Test Cap for Vapor Recovery Hose. This cap shall have a tap for manometer connection and a fitting with shut-off valve for connection to the pressure-vacuum supply hose.

3.8 Caps for Liquid Delivery Hoses.

4. *Pretest Preparations*

4.1 Summary. Testing problems may occur due to the presence of volatile vapors and/or temperature fluctuations inside the delivery tank. Under these conditions, it is often difficult to obtain a stable initial pressure at the beginning of a test, and erroneous test results may occur. To help prevent this, it is recommended that, prior to testing, volatile vapors be removed from the tank and the temperature inside the tank be allowed to stabilize. Because it is not always possible to attain completely these pretest conditions a provision to ensure reproducible results is included. The difference in results for two consecutive runs must meet the criterion in Sections 5.2.5 and 5.3.5.

4.2 Emptying of Tank. The delivery tank shall be emptied of all liquid.

4.3 Purging of Vapor. As much as possible, the delivery tank shall be purged of all volatile vapors by any safe, acceptable method. One method is to carry a load of non-volatile

liquid fuel, such as diesel or heating oil, immediately prior to the test, thus flushing out all the volatile gasoline vapors. A second method is to remove the volatile vapors by blowing ambient air into each tank compartment for at least 20 minutes. This second method is usually not as effective and often causes stabilization problems, requiring a much longer time for stabilization during the testing.

4.4 Temperature Stabilization. As much as possible, the test shall be conducted under isothermal conditions. The temperature of the delivery tank should be allowed to equilibrate in the test environment. During the test, the tank should be protected from extreme environmental and temperature variability, such as direct sunlight.

5. *Test Procedure*

5.1 Preparations.

5.1.1 Open and close each dome cover.

5.1.2 Connect static electrical ground connections to tank. Attach the liquid delivery and vapor return hoses, remove the liquid delivery elbows, and plug the liquid delivery fittings.

NOTE: The purpose of testing the liquid delivery hoses is to detect tears or holes that would allow liquid leakage during a delivery. Liquid delivery hoses are not considered to be possible sources of vapor leakage, and thus, do not have to be attached for a vapor leakage test. Instead, a liquid delivery hose could be either visually inspected, or filled with water to detect any liquid leakage.)

5.1.3 Attach the test cap to the end of the vapor recovery hose.

5.1.4 Connect the pressure-vacuum supply hose and the pressure-vacuum relief valve to the shut-off valve. Attach a manometer to the pressure tap.

5.1.5 Connect compartments of the tank internally to each other if possible. If not possible, each compartment must be tested separately, as if it were an individual delivery tank.

5.2 Pressure Test.

5.2.1 Connect the pressure source to the pressure-vacuum supply hose.

5.2.2 Open the shut-off valve in the vapor recovery hose cap. Applying air pressure slowly, pressurize the tank to P_i, the initial pressure specified in the regulation.

5.2.3 Close the shut-off valve and allow the pressure in the tank to stabilize, adjusting the pressure if necessary to maintain pressure of P_i. When the pressure stabilizes, record the time and initial pressure.

5.2.4 At the end of t minutes, record the time and final pressure.

5.2.5 Repeat steps 5.2.2 through 5.2.4 until the change in pressure for two consecutive runs agrees within ±12.5 mm H_2O. Calculate the arithmetic average of the two results.

5.2.6 Compare the average measured change in pressure to the allowable pressure change, Δ p, as specified in the regulation. If the delivery tank does not satisfy the vapor tightness criterion specified in the regulation, repair the sources of leakage, and repeat the pressure test until the criterion is met.

5.2.7 Disconnect the pressure source from the pressure-vacuum supply hose, and slowly open the shut-off valve to bring the tank to atmospheric pressure.

5.3 Vacuum Test.

5.3.1 Connect the vacuum source to the pressure-vacuum supply hose.

5.3.2 Open the shut-off valve in the vapor recovery hose cap. Slowly evacuate the tank to V_i, the initial vacuum specified in the regulation.

5.3.3 Close the shut-off valve and allow the pressure in the tank to stabilize, adjusting the pressure if necessary to maintain a vacuum of V_i. When the pressure stabilizes, record the time and initial vacuum.

5.3.4 At the end of t minutes, record the time and final vacuum.

5.3.5 Repeat steps 5.3.2 through 5.3.4 until the change in vacuum for two consecutive runs agrees within ±12.5 mm H_2O. Calculate the arithmetic average of the two results.

5.3.6 Compare the average measured change in vacuum to the allowable vacuum change, Δ v, as specified in the regulation. If the delivery tank does not satisfy the vapor tightness criterion specified in the regulation, repair the sources of leakage, and repeat the vacuum test until the criterion is met.

5.3.7 Disconnect the vacuum source from the pressure-vacuum supply hose, and slowly open the shut-off valve to bring the tank to atmospheric pressure.

5.4 Post-Test Clean-Up. Disconnect all test equipment and return the delivery tank to its pretest condition.

6. *Alternative Procedures*

6.1 The pumping of water into the bottom of a delivery tank is an acceptable alternative to the pressure source described above. Likewise, the draining of water out of the bottom of a delivery tank may be substituted for the vacuum source. Note that some of the specific step-by-step procedures in the method must be altered slightly to accommodate these different pressure and vacuum sources.

6.2 Techniques other than specified above may be used for purging and pressurizing a delivery tank, if prior approval is obtained from the Administrator. Such approval will be based upon demonstrated equivalency with the above method.

METHOD 28—CERTIFICATION AND AUDITING OF WOOD HEATERS

1. Applicability and Principle

1.1 Applicability. This method is applicable for the certification and auditing of wood heaters. This method describes the test facility, test fuel charge, and wood heater operation as well as procedures for determining burn rates and particulate emission rates and for reducing data.

1.2 Principle. Particulate matter emissions are measured from a wood heater burning a prepared test fuel crib in a test facility maintained at a set of prescribed conditions.

2. Definitions

2.1 Burn Rate. The rate at which test fuel is consumed in a wood heater. Measured in kilograms of wood (dry basis) per hour (kg/hr).

2.2 Certification or Audit Test. A series of at least four test runs conducted for certification or audit purposes that meets the burn rate specifications in Section 5.

2.3 Firebox. The chamber in the wood heater in which the test fuel charge is placed and combusted.

2.4 Secondary Air Supply. An air supply that introduces air to the wood heater such that the burn rate is not altered by more than 25 percent when the secondary air supply is adjusted during the test run. The wood heater manufacturer can document this through design drawings that show the secondary air is introduced only into a mixing chamber or secondary chamber outside the firebox.

2.5 Test Facility. The area in which the wood heater is installed, operated, and sampled for emissions.

2.6 Test Fuel Charge. The collection of test fuel pieces placed in the wood heater at the start of the emission test run.

2.7 Test Fuel Crib. The arrangement of the test fuel charge with the proper spacing requirements between adjacent fuel pieces.

2.8 Test Fuel Loading Density. The weight of the as-fired test fuel charge per unit volume of usable firebox.

2.9 Test Fuel Piece. The 2 x 4 or 4 x 4 wood piece cut to the length required for the test fuel charge and used to construct the test fuel crib.

2.10 Test Run. An individual emission test which encompasses the time required to consume the mass of the test fuel charge.

2.11 Usable Firebox Volume. The volume of the firebox determined using the following definitions:

2.11.1 Height. The vertical distance extending above the loading door, if fuel could reasonably occupy that space, but not more than 2 inches above the top (peak height) of the loading door, to the floor of the firebox (i.e., below a permanent grate) if the grate allows a 1-inch diameter piece of wood to pass through the grate, or, if not, to the top of the grate. Firebox height is not necessarily uniform but must account for variations caused by internal baffles, air channels, or other permanent obstructions.

2.11.2 Length. The longest horizontal fire chamber dimension that is parallel to a wall of the chamber.

2.11.3 Width. The shortest horizontal fire chamber dimension that is parallel to a wall of the chamber.

2.12 Wood Heater. An enclosed, wood-burning appliance capable of and intended for space heating or domestic water heating, as defined in the applicable regulation.

2.13 Pellet Burning Wood Heater. A wood heater which meets the following criteria: (1) The manufacturer makes no reference to burning cord wood in advertising or other literature, (2) the unit is safety listed for pellet fuel only, (3) the unit operating and instruction manual must state that the use of cordwood is prohibited by law, and (4) the unit must be manufactured and sold including the hopper and auger combination as integral parts.

3. Apparatus

3.1 Insulated Solid Pack Chimney. For installation of wood heaters. Solid pack insulated chimneys shall have a minimum of 2.5 cm (1 in.) solid pack insulating material surrounding the entire flue and possess a label demonstrating conformance to U.L. Standard 103 (incorporated by reference. See §60.17).

3.2 Platform Scale and Monitor. For monitoring of fuel load weight change. The scale shall be capable of measuring weight to within 0.05 kg (0.1 lb) or 1 percent of the initial test fuel charge weight, whichever is greater.

3.3 Wood Heater Temperature Monitors. Seven, each capable of measuring temperature to within 1.5 percent of expected absolute temperatures.

3.4 Test Facility Temperature Monitor. A thermocouple located centrally in a vertically oriented 150 mm (6 in.) long, 50 mm (2 in.) diameter pipe shield that is open at both ends, capable of measuring temperature to within 1.5 percent of expected temperatures.

3.5 Balance (optional). Balance capable of weighing the test fuel charge to within 0.05 kg (0.1 1b).

3.6 Moisture Meter. Calibrated electrical resistance meter for measuring test fuel moisture to within 1 percent moisture content.

3.7 Anemometer. Device capable of detecting air velocities less than 0.10 m/sec (20 ft/min), for measuring air velocities near the test appliance.

3.8 Barometer. Mercury, aneroid or other barometer capable of measuring atmospheric pressure to within 2.5 mm Hg (0.1 in. Hg).

3.9 Draft Gauge. Electromanometer or other device for the determination of flue draft or static pressure readable to within 0.50 Pa (0.002 in. H_2O).

3.10 Humidity Gauge. Psychrometer or hygrometer for measuring room humidity.

3.11 Sampling Methods. Use particulate emission measurement Method 5G or Method 5H to determine particulate concentrations, gas flow rates, and particulate emission rates.

4. Test Facility. Test Fuel Properties, and Test Fuel Charge Specifications

4.1 Test Facility.

4.1.1 Wood Heater Flue. Steel flue pipe extending to 2.6±0.15 m (8.5±0.5 ft) above the top of the platform scale, and above this level, insulated solid pack type chimney extending to 4.6+0.3 m (15±1 ft) above the platform scale, and of the size specified by the wood heater manufacturer. This applies to both freestanding and insert type wood heaters.

Other chimney types (e.g., solid pack insulated pipe) may be used in place of the steel flue pipe if the wood heater manufacturer's written appliance specifications require such chimney for home installation (e.g., zero clearance wood heater inserts). Such alternative chimney or flue pipe must remain and be sealed with the wood heater following the certification test.

4.1.2 Test Facility Conditions. The test facility temperature shall be maintained between 18 and 32 °C (65 and 90 °F) during each test run.

Air velocities within 0.6 m (2 ft) of the test appliance and exhaust system shall be less than 0.25 m/sec (50 ft/min) without fire in the unit.

The flue shall discharge into the same space or into a space freely communicating with the test facility. Any hood or similar device used to vent combustion products shall not induce a draft greater than 1.25 Pa (0.005 in. H_2O) on the wood heater measured when the wood heater is not operating.

For test facilities with artificially induced barometric pressures (e.g., pressurized chambers), the barometric pressure in the test facility shall not exceed 1,033 mb (30.5 in. Hg) during any test run.

4.2 Test Fuel Properties. The test fuel shall conform to the following requirements:

4.2.1 Fuel Species. Untreated, air-dried, Douglas fir lumber. Kiln-dried lumber is not permitted. The lumber shall be certified C grade (standard) or better Douglas fir by a lumber grader at the mill of origin as specified in the West Coast Lumber Inspection Bureau standard No. 16 (incorporated by reference. See §60.17).

4.2.2 Fuel Moisture. The test fuel shall have a moisture content range between 16 to 20 percent on a wet basis (19 to 25 percent dry basis).

Addition of moisture to previously dried wood is not allowed. It is recommended that the test fuel be stored in a temperature and humidity-controlled room.

4.2.3 Fuel Temperature. The test fuel shall be at the test facility temperature 18 to 32 °C (65 to 90 °F).

4.3 Test Fuel Charge Specifications.

4.3.1 Fuel Dimensions. The dimensions of each test fuel piece shall conform to the nominal measurements of 2 x 4 and 4 x 4 lumber. Each piece of test fuel (not including spacers) shall be of equal length, except as necessary to meet requirements in Section 6.2.5, and shall closely approximate ⅝ the dimensions of the length of the usable firebox. The fuel piece dimensions shall be determined in relation to the appliance's firebox volume according to guidelines listed below:

4.3.1.1 If the usable firebox volume is less than or equal to 0.043 m^3 (1.5 ft^3), use 2 x 4 lumber.

4.3.1.2 If the usable firebox volume is greater than 0.043 m^3 (1.5 ft^3) and less than or equal to 0.085 m^3 (3.0 ft^3), use 2 x 4 and 4 x 4 lumber. About half the weight of the test fuel charge shall be 2 x 4 lumber, and the remainder shall be 4 x 4 lumber.

4.3.1.3 If the usable firebox volume is greater than 0.085 m^3 (3.0 ft^3), use 4 x 4 lumber.

4.3.2 Test Fuel Spacers. Air-dried, Douglas fir lumber meeting the fuel properties in Section 4.2. The spacers shall be 130 x 40 x 20 mm (5 x 1.5 x 0.75 in.).

4.3.3 Test Fuel Charge Density. The test fuel charge density shall be 112 ± 11.2 kg/m^3 (7 ± 0.7 lb/ft^3) of usable firebox volume on a wet basis.

4.4 Wood Heater Thermal Equilibrium. The average of the wood heater surface temperatures at the end of the test run shall agree with the average surface temperature at the start of the test run to within 70 °C (125 °F).

5. Burn Rate Criteria

5.1 Burn Rate Categories. One emission test run is required in each of the following burn rate categories:

BURN RATE CATEGORIES
(Average kg/hr, dry basis)

Category 1	Category 2	Category 3	Category 4
<0.80	0.80 to 1.25	1.25 to 1.90	Maximum burn rate.

5.1.1 Maximum Burn Rate. For Category 4, the wood heater shall be operated with the primary air supply inlet controls fully open

(or, if thermostatically controlled, the thermostat shall be set at maximum heat output) during the entire test run, or the maximum burn rate setting specified by the manufacturer's written instructions.

5.1.2 Other Burn Rate Categories. For burn rates in Categories 1 through 3, the wood heater shall be operated with the primary air supply inlet control, or other mechanical control device, set at a predetermined position necessary to obtain the average burn rate required for the category.

5.2 Alternative Burn Rates for Burn Rate Categories 1 and 2. If a wood heater cannot be operated at a burn rate below 0.80 kg/hr, two test runs shall be conducted with burn rates within Category 2. If a wood heater cannot be operated at a burn rate below 1.25 kg/hr, the flue shall be dampered or the air supply otherwise controlled in order to achieve two test runs within Category 2.

Evidence that a wood heater cannot be operated at a burn rate less than 0.80 kg/hr shall include documentation of two or more attempts to operate the wood heater in burn rate Category 1 and fuel combustion has stopped, or results of two or more test runs demonstrating that the burn rates were greater than 0.80 kg/hr when the air supply controls were adjusted to the lowest possible position or settings. Stopped fuel combustion is evidenced when an elapsed time of 30 minutes or more has occurred without a measurable (< 0.05 kg (0.1 lb) or 1.0 percent, whichever is greater) weight change in the test fuel charge. See also Section 6.4.3. Report the evidence and the reasoning used to determine that a test in burn rate Category 1 cannot be achieved; for example, two attempts to operate at a burn rate of 0.4 kg/hr are not sufficient evidence that burn rate Category 1 cannot be achieved.

NOTE: After July 1, 1990, if a wood heater cannot be operated at a burn rate less than 0.80 kg/hr, at least one test run with an average burn rate of 1.00 kg/hr or less shall be conducted. Additionally, if flue dampering must be used to achieve burn rates below 1.25 kg/hr (or 1.0 kg/hr), results from a test run conducted at burn rates below 0.90 kg/hr need not be reported or included in the test run average provided that such results are replaced with results from a test run meeting the criteria above.

6. Procedures

6.1 Catalytic Combustor and Wood Heater Aging. The catalyst-equipped wood heater or a wood heater of any type shall be aged before the certification test begins. The aging procedure shall be conducted and documented by a testing laboratory accredited according to procedures in §60.535 of 40 CFR Part 60.

6.1.1 Catalyst-equipped Wood Heater. Operate the catalyst-equipped wood heater using fuel described in Section 4.2 or cordwood with a moisture content between 15 and 25 percent on a wet basis. Operate the wood heater at a medium burn rate (Category 2 or 3) with a new catalytic combustor in place and in operation for at least 50 hours. Record and report hourly catalyst exit temperature data (Section 6.2.2) and the hours of operation.

6.1.2 Non-Catalyst Wood Heater. Operate the wood heater using the fuel described in Section 6.1.1 at a medium burn rate for at least 10 hours. Record and report the hours of operation.

6.2 Pretest Preparation. Record the test fuel charge dimensions and weights, and wood heater and catalyst descriptions as shown in the example in Figure 28–3.

6.2.1 Wood Heater Installation. Assemble the wood heater appliance and parts in conformance with the manufacturer's written installation instructions. Place the wood heater centrally on the platform scale and connect the wood heater to the flue described in Section 4.1.1. Clean the flue with an appropriately sized, wire chimney brush before each certification test.

6.2.2 Wood Heater Temperature Monitors. For catalyst-equipped wood heaters, locate a temperature monitor (optional) about 25 mm (1 in.) upstream of the catalyst at the centroid of the catalyst face area, and locate a temperature monitor (mandatory) that will indicate the catalyst exhaust temperature. This temperature monitor is centrally located within 25 mm (1 in.) downstream at the centroid of catalyst face area. Record these locations.

Locate wood heater surface temperature monitors at five locations on the wood heater firebox exterior surface. Position the temperature monitors centrally on the top surface, on two sidewall surfaces, and on the bottom and back surfaces. Position the monitor sensing tip on the firebox exterior surface inside of any heat shield, air circulation walls, or other wall or shield separated from the firebox exterior surface. Surface temperature locations for unusual design shapes (e.g., spherical, etc.) shall be positioned so that there are four surface temperature monitors in both the vertical and horizontal planes passing at right angles through the centroid of the firebox, not including the fuel loading door (total of five temperature monitors).

6.2.3 Test Facility Conditions. Locate the test facility temperature monitor on the horizontal plane that includes the primary air intake opening for the wood heater. Locate the temperature monitor 1 to 2 m (3 to 6 ft) from the front of the wood heater in the 90° sector in front of the wood heater.

Use an anemometer to measure the air velocity. Measure and record the room air velocity before the pretest ignition period (Section 6.3) and once immediately following the test run completion.

Measure and record the test facility's ambient relative humidity, barometric pressure, and temperature before and after each test run.

Measure and record the flue draft or static pressure in the flue at a location no greater than 0.3 m (1 ft) above the flue connector at the wood heater exhaust during the test run at the recording intervals (Section 6.4.2).

6.2.4 Wood Heater Firebox Volume. Determine the firebox volume using the definitions for height, width, and length in Section 2. Volume adjustments due to presence of firebrick and other permanent fixtures may be necessary. Adjust width and length dimensions to extend to the metal wall of the wood heater above the firebrick or permanent obstruction if the firebrick or obstruction extending the length of the side(s) or back wall extends less than one-third of the usable firebox height. Use the width or length dimensions inside the firebrick if the firebrick extends more than one-third of the usable firebox height. If a log retainer or grate is a permanent fixture and the manufacturer recommends that no fuel be placed outside the retainer, the area outside of the retainer is excluded from the firebox volume calculations.

In general, exclude the area above the ash lip if that area is less than 10 percent of the usable firebox volume. Otherwise, take into account consumer loading practices. For instance, if fuel is to be loaded front-to-back, an ash lip may be considered usable firebox volume.

Include areas adjacent to and above a baffle (up to two inches above the fuel loading opening) if four inches or more horizontal space exist between the edge of the baffle and a vertical obstruction (e.g., sidewalls or air channels).

6.2.5 Test Fuel Charge. Prepare the test fuel pieces in accordance with the specifications in Section 4.3. Determine the test fuel moisture content with a calibrated electrical resistance meter or other equivalent performance meter. (To convert moisture meter readings from the dry basis to the wet basis: (100)(percent dry reading) ÷ (100 + percent dry reading) = percent moisture wet basis.) Determine fuel moisture for each fuel piece (not including spacers) by averaging at least three moisture meter readings, one from each of three sides, measured parallel to the wood grain. Average all the readings for all the fuel pieces in the test fuel charge. If an electrical resistance type meter is used, penetration of insulated electrodes shall be one-fourth the thickness of the test fuel piece or 19 mm (0.75 in.), whichever is greater. Measure the moisture content within a 4-hour period prior to the test run. Determine the fuel temperature by measuring the temperature of the room where the wood has been stored for at least 24 hours prior to the moisture determination.

Attach the spacers to the test fuel pieces with uncoated, ungalvanized nails or staples as illustrated in Figure 28–1. Attachment of spacers to the top of the test fuel piece(s) on top of the test fuel charge is optional.

To avoid stacking difficulties, or when a whole number of test fuel pieces does not result, all piece lengths shall be adjusted uniformly to remain within the specified loading density. The shape of the test fuel crib shall be geometrically similar to the shape of the firebox volume without resorting to special angular or round cuts on the individual fuel pieces.

6.2.6 Sampling Method. Prepare the sampling equipment as defined by the selected method. Collect one particulate emission sample for each test run.

6.2.7 Secondary Air Adjustment Validation. If design drawings do not show the introductions of secondary air into a chamber outside the firebox (Section 2.4), conduct a separate test of the wood heater's secondary air supply. Operate the wood heater at a burn rate in Category 1 (Sections 5.1 or 5.2) with the secondary air supply operated following the manufacturer's written instructions. Start the secondary air validation test run as described in Section 6.4.1, except no emission sampling is necessary and burn rate data shall be recorded at 5-minute intervals.

After the start of the test run, operate the wood heater with the secondary air supply set as per the manufacturer's instructions, but with no adjustments to this setting. After 25 percent of the test fuel has been consumed, adjust the secondary air supply controls to another setting, as per the manufacturer's instructions. Record the burn rate data (5-minute intervals) for 20 minutes following the air supply adjustment.

Adjust the air supply control(s) to the original position(s), operate at this condition for at least 20 minutes, and repeat the air supply adjustment procedure above. Repeat the procedure three times at equal intervals over the entire burn period as defined in Section 6.4. If the secondary air adjustment results in a burn rate change of more than an average of 25 percent between the 20-minute periods before and after the secondary adjustments, the secondary air supply shall be considered a primary air supply, and no adjustment to this air supply is allowed during the test run.

6.3 Pretest Ignition. Build a fire in the wood heater in accordance with the manufacturer's written instructions.

6.3.1 Pretest Fuel Charge. Crumpled newspaper loaded with kindling may be used to help ignite the pretest fuel. The pretest fuel, used to sustain the fire, shall meet the same fuel requirements prescribed in Section 4.2. The pretest fuel charge shall consist of whole 2 x 4's that are no less than 1/3 the length of the test fuel pieces. Pieces of 4 x 4 lumber in approximately the same weight ratio as for

the test fuel charge may be added to the pretest fuel charge.

6.3.2 Wood Heater Operation and Adjustments. Set the air inlet supply controls at any position that will maintain combustion of the pretest fuel load. At least one hour before the start of the test run, set the air supply controls at the approximate positions necessary to achieve the burn rate desired for the test run. Adjustment of the air supply controls, fuel addition or subtractions, and coalbed raking shall be kept to a minimum but are allowed up to 15 minutes prior to the start of the test run. For the purposes of this method, coalbed raking is the use of a metal tool (poker) to stir coals, break burning fuel into smaller pieces, dislodge fuel pieces from positions of poor combustion, and check for the condition of uniform charcoalization. Record all adjustments made to the air supply controls, adjustments to and additions or subtractions of fuel, and any other changes to wood heater operations that occur during pretest ignition period. Record fuel weight data and wood heater temperature measurements at 10-minute intervals during the hour of the pretest ignition period preceding the start of the test run. During the 15-minute period prior to the start of the test run, the wood heater loading door shall not be open more than a total of 1 minute. Coalbed raking is the only adjustment allowed during this period.

NOTE: One purpose of the pretest ignition period is to achieve uniform charcoalization of the test fuel bed prior to loading the test fuel charge. Uniform charcoalization is a general condition of the test fuel bed evidenced by an absence of large pieces of burning wood in the coal bed and the remaining fuel pieces being brittle enough to be broken into smaller charcoal pieces with a metal poker. Manipulations to the fuel bed prior to the start of the test run should be done to achieve uniform charcoalization while maintaining the desired burn rate. In addition, some wood heaters (e.g., high mass units) may require extended pretest burn time and fuel additions to reach an initial average surface temperature sufficient to meet the thermal equilibrium criteria in Section 4.4.

The weight of pretest fuel remaining at the start of the test run is determined as the difference between the weight of the wood heater with the remaining pretest fuel and the tare weight of the cleaned, dry wood heater with or without dry ash or sand added consistent with the manufacturer's instructions and the owner's manual. The tare weight of the wood heater must be determined with the wood heater (and ash, if added) in a dry condition.

6.4 Test Run. Complete a test run in each burn rate category, as follows:

6.4.1 Test Run Start. When the kindling and pretest fuel have been consumed to leave a fuel weight between 20 and 25 percent of the weight of the test fuel charge, record the weight of the fuel remaining and start the test run. Record and report any other criteria, in addition to those specified in this section, used to determine the moment of the test run start (e.g., firebox or catalyst temperature), whether such criteria are specified by the wood heater manufacturer or the testing laboratory. Record all wood heater individual surface temperatures, catalyst temperatures, any initial sampling method measurement values, and begin the particulate emission sampling. Within 1 minute following the start of the test run, open the wood heater door, load the test fuel charge, and record the test fuel charge weight. Recording of average, rather than individual, surface temperatures is acceptable for tests conducted in accordance with §60.533(o)(3)(i) of 40 CFR Part 60.

Position the fuel charge so that the spacers are parallel to the floor of the firebox, with the spacer edges abutting each other. If loading difficulties result, some fuel pieces may be placed on edge. If the usable firebox volume is between 0.043 and 0.085 m^3 (1.5 and 3.0 ft^3), alternate the piece sizes in vertical stacking layers to the extent possible. For example, place 2 x 4's on the bottom layer in direct contact with the coal bed and 4 x 4's on the next layer, etc. (See Figure 28–2). Position the fuel pieces parallel to each other and parallel to the longest wall of the firebox to the extent possible within the specifications in Section 6.2.5.

Load the test fuel in appliances having unusual or unconventional firebox design maintaining air space intervals between the test fuel pieces and in conformance with the manufacturer's written instructions. For any appliance that will not accommodate the loading arrangement specified in the paragraph above, the test facility personnel shall contact the Administrator for an alternative loading arrangement.

The wood heater door may remain open and the air supply controls adjusted up to five minutes after the start of the test run in order to make adjustments to the test fuel charge and to ensure ignition of the test fuel charge has occurred. Within the five minutes after the start of the test run, close the wood heater door and adjust the air supply controls to the position determined to produce the desired burn rate. No other adjustments to the air supply controls or the test fuel charge are allowed (except as specified in Sections 6.4.3 and 6.4.4) after the first five minutes of the test run. Record the length of time the wood heater door remains open, the adjustments to the air supply controls, and any other operational adjustments.

6.4.2 Data Recording. Record fuel weight data, wood heater individual surface and catalyst temperature measurements, other wood heater operational data (e.g., draft), test facility temperature and sampling

method data at 10-minute intervals (or more frequently at the option of the tester) as shown on example data sheet, Figure 28–4.

6.4.3 Test Fuel Charge Adjustment. The test fuel charge may be adjusted (i.e., re-positioned) once during a test run if more than 60 percent of the initial test fuel charge weight has been consumed and more than 10 minutes have elapsed without a measurable (< 0.05 kg (0.1 lb) or 1.0 percent, whichever is greater) weight change. The time used to make this adjustment shall be less than 15 seconds.

6.4.4 Air Supply Adjustment. Secondary air supply controls may be adjusted once during the test run following the manufacturer's written instructions (see Section 6.2.7). No other air supply adjustments are allowed during the test run.

Recording of wood heater flue draft during the test run is optional for tests conducted in accordance with §60.533(o)(3)(i) of 40 CFR Part 60.

6.4.5 Auxiliary Wood Heater Equipment Operation. Heat exchange blowers sold with the wood heater shall be operated during the test run following the manufacturer's written instructions. If no manufacturer's written instructions are available, operate the heat exchange blower in the ''high'' position. (Automatically operated blowers shall be operated as designed.) Shaker grates, by-pass controls, or other auxiliary equipment may be adjusted only one time during the test run following the manufacturer's written instructions.

Record all adjustments on a wood heater operational written record.

NOTE: If the wood heater is sold with a heat exchange blower as an option, test the wood heater with the heat exchange blower operating as described in Sections 5 and 6 and report the results. As an alternative to repeating all test runs without the heat exchange blower operating, the tester may conduct one test run without the blower operating as described in Section 6.4.5 at a burn rate in Category 2 (Section 5.1). If the emission rate resulting from this test run without the blower operating is equal to or less than the emission rate plus 1.0 g/hr for the test run in burn rate Category 2 with the blower operating, the wood heater may be considered to have the same average emission rate with or without the blower operating. Additional test runs without the blower operating are unnecessary.

6.5 Consecutive Test Runs. Test runs on a wood heater may be conducted consecutively provided that a minimum one-hour interval occurs between test runs.

6.6 Additional Test Runs. The testing laboratory may conduct more than one test run in each of the burn rate categories specified in Section 5.1. If more than one test run is conducted at a specified burn rate, the results from at least two-thirds of the test runs in that burn rate category shall be used in calculating the weighted average emission rate (see Section 8.1). The measurement data and results of all test runs shall be reported regardless of which values are used in calculating the weighted average emission rate (see NOTE: in Section 5.2).

6.7 Pellet Burning Heaters. Certification testing procedures for pellet burning wood heaters are based on the procedures in this method. The differences in the procedures from the sections in Method 28 are as follows:

6.7.1 Test Fuel Properties. The test fuel shall be all wood pellets with a moisture content no greater than 20 percent on a wet basis (25 percent on a dry basis). Determine the wood moisture content with either ASTM–D2016–74(82)(Method A) or ASTM D4442–84. (incorporated by reference. See Section 60.17).

6.7.2 Test Fuel Charge Specifications. The test fuel charge size shall be as per the manufacturer s written instructions for maintaining the desired burn rate.

6.7.3 Wood Heater Firebox Volume. The firebox volume need not be measured or determined for establishing the test fuel charge size. The firebox dimensions and other heater specifications needed to identify the heater for certification purposes shall be reported.

6.7.4 Heater Installation. Arrange the heater with the fuel supply hopper on the platform scale as described in Section 6.2.1.

6.7.5 Pretest Ignition. Start a fire in the heater as directed by the manufacturer's written instructions, and adjust the heater controls to achieve the desired burn rate. Operate the heater at the desired burn rate for at least 1 hour before the start of the test run.

6.7.6 Sampling Method. Method 5G or 5H shall be used for the certification testing of pellet burners. Prepare the sampling equipment as described in Method 5G or 5H. Collect one particulate emission sample for each test run.

6.7.7 Test Run. Complete a test run in each burn rate category as follows:

6.7.7.1 Test Run Start. When the wood heater has operated for at least 1 hour at the desired burn rate, add fuel to the supply hopper as necessary to complete the test run, record the weight of the fuel in the supply hopper (the wood heater weight), and start the test run. Add no additional fuel to the hopper during the test run.

Record all the wood heater surface temperatures, the initial sampling method measurement values, the time at the start of the test, and begin the emission sampling. Make no adjustments to the wood heater air supply or wood supply rate during the test run.

6.7.7.2 Data Recording. Record the fuel (wood heater) weight data, wood heater temperature and operational data, and emission sampling data as described in Section 6.4.2.

6.7.7.3 Test Run Completion. Continue emission sampling and wood heater operation for 2 hours. At the end of the test run, stop the particulate sampling, and record the final fuel weight, the run time, and all final measurement values.

6.7.8 Calculations. Determine the burn rate using the difference between the initial and final fuel (wood heater) weights and the procedures described in Section 8.3. Complete the other calculations as described in Section 8.

7. Calibrations

7.1 Platform Scale. Perform a multipoint calibration (at least five points spanning the operational range) of the platform scale before its initial use. The scale manufacturer's calibration results are sufficient for this purpose. Before each certification test, audit the scale with the wood heater in place by weighing at least one calibration weight (Class F) that corresponds to 20 percent to 80 percent of the expected test fuel charge weight. If the scale cannot reproduce the value of the calibration weight within 0.05 kg (0.1 lbs) or 1 percent of the expected test fuel charge weight, whichever is greater, recalibrate the scale before use with at least five calibration weights spanning the operational range of the scale.

7.2 Balance (optional). Calibrate as described in Section 7.1.

7.3 Temperature Monitor. Calibrate as in Method 2, Section 4.3, before the first certification test and semiannually thereafter.

7.4 Moisture Meter. Calibrate as per the manufacturer's instructions before each certification test.

7.5 Anemometer. Calibrate the anemometer as specified by the manufacturer's instructions before the first certification test and semiannually thereafter.

7.6 Barometer. Calibrate against a mercury barometer before the first certification test and semiannually thereafter.

7.7 Draft Gauge. Calibrate as per the manufacturer's instructions; a liquid manometer does not require calibration.

7.8 Humidity Gauge. Calibrate as per the manufacturer's instructions before the first certification test and semiannually thereafter.

8. Calculations and Reporting

Carry out calculations retaining at least one extra decimal figure beyond that of the acquired data. Round off figures after the final calculation.

8.1 Weighted Average Emission Rate.

$$E_w = \frac{\sum_{i=1}^{n} (K_i E_i)}{\sum_{i=1}^{n} K_i} \qquad \text{Eq. 28-1}$$

where:

E_w = Weighted average emission rate, g/hr;

E_i = Emission rate for test run, i, from Method 5G or 5H, g/hr;

k_i = Test run weighting factor = $P_{i=1}$—P_{i-1};

n = Total number of test runs;

P_i = Probability for burn rate during test run, i, obtained from Table 28–1. Use linear interpolation to determine probability values for burn rates between those listed on the table.

NOTE: P_o always equals 0, $P_{(n=1)}$ always equals 1, P_1 corresponds to the probability of the lowest recorded burn rate, P_2 corresponds to the probability of the next lowest burn rate, etc. An example calculation is shown on Figure 28–5.

8.2 Average Wood Heater Surface Temperatures. Calculate the average of the wood heater surface temperatures for the start of the test run (Section 6.3.1) and for the test run completion (Section 6.3.6). If the two average temperatures do not agree within 70 °C (125 °F), report the test run results, but do not include the test run results in the test average. Replace such test run results with results from another test run in the same burn rate category.

8.3 Burn Rate.

$$BR = \frac{60\ W_{wd}}{\theta} \frac{100 - \%M_w}{100} \qquad \text{Eq. 28-2}$$

Where:

BR = Dry wood burn rate, kg/hr (lb/hr)

W_{wd} = Total mass of wood burned during the test run, kg (lb)

θ - Total time of test run, min.

$\%M_w$ = Average moisture in test fuel charge, wet basis, percent.

8.4 Reporting Criteria. Submit both raw and reduced test data for wood heater tests. Specific reporting requirements are as follows:

8.4.1 Wood Heater Identification. Report wood heater identification information. An example data form is shown on Figure 28–4.

8.4.2 Test Facility Information. Report test facility temperature, air velocity, and humidity information. An example data form is shown on Figure 28–4.

8.4.3 Test Equipment Calibration and Audit Information. Report calibration and audit results for the platform scale, test fuel balance, test fuel moisture meter, and sampling equipment including volume metering systems and gaseous analyzers.

8.4.4 Pretest Procedure Description. Report all pretest procedures including pretest fuel weight, burn rates, wood heater temperatures, and air supply settings. An example data form is shown on Figure 28–4.

8.4.5 Particulate Emission Data. Report a summary of test results for all test runs and the weighted average emission rate. Submit copies of all data sheets and other records collected during the testing. Submit examples of all calculations.

8.4.6 Suggested Test Report Format.

a. Introduction

1. Purpose of test—certification, audit, efficiency, research and development.

2. Wood heater identification—manufacturer, model number, catalytic/ noncatalytic, options.

3. Laboratory—name, location (altitude), participants.

4. Test information—date wood heater received, date of tests, sampling methods used, number of test runs.

b. Summary and Discussion of Results

1. Table of results (in order of increasing burn rate)—test run number, burn rate, particulate emission rate, efficiency (if determined), averages (indicate which test runs are used).

2. Summary of other data—test facility conditions, surface temperature averages, catalyst temperature averages, pretest fuel weights, test fuel charge weights, run times.

3. Discussion—Burn rate categories achieved, test run result selection, specific test run problems and solutions.

c. Process Description

1. Wood heater dimensions—volume, height, width, lengths (or other linear dimensions), weight, volume adjustments.

2. Firebox configuration—air supply locations and operation, air supply introduction location, refractory location and dimensions, catalyst location, baffle and by-pass location and operation (include line drawings or photographs).

3. Process operation during test—air supply settings and adjustments, fuel bed adjustments, draft.

4. Test fuel—test fuel properties (moisture and temperature), test fuel crib description (include line drawing or photograph), test fuel charge density.

d. Sampling Locations

Describe sampling location relative to wood heater. Include drawing or photograph.

e. Sampling and Analytical Procedures

1. Sampling methods—brief reference to operational and sampling procedures and optional and alternative procedures used.

2. Analytical methods—brief description of sample recovery and analysis procedures.

f. Quality Control and Assurance Procedures and Results

1. Calibration procedures and results—certification procedures, sampling and analysis procedures.

2. Test method quality control procedures—leak-checks, volume meter checks, stratification (velocity) checks, proportionality results.

APPENDICES

1. Results and Example Calculations. Complete summary tables and accompanying examples of all calculations.

2. Raw Data. Copies of all uncorrected data sheets for sampling measurements, temperature records and sample recovery data. Copies of all pretest burn rate and wood heater temperature data.

3. Sampling and Analytical Procedures. Detailed description of procedures followed by laboratory personnel in conducting the certification test, emphasizing particularly parts of the procedures differing from the methods (e.g., approved alternatives).

4. Calibration Results. Summary of all calibrations, checks, and audits pertinent to certification test results with dates.

5. Participants. Test personnel, manufacturer representatives, and regulatory observers.

6. Sampling And Operation Records. Copies of uncorrected records of activities not included on raw data sheets (e.g., wood heater door open times and durations).

7. Additional Information. Wood heater manufacturer's written instructions for operation during the certification test.

9. Bibliography

1. Oregon Department of Environmental Quality Standard Method for Measuring the Emissions and Efficiencies of Woodstoves, June 8, 1984. Pursuant to Oregon Administrative Rules Chapter 340, Division 21.

2. American Society for Testing Materials. Proposed Test Methods for Heating Performance and Emissions of Residential Wood-Fired Closed Combustion-Chamber Heating Appliances. E–6 Proposal P 180. August, 1986.

3. Radian Corporation, OMNI Environmental Services, Inc., Cumulative Probability for a Given Burn Rate Based on Data Generated in the CONEG and BPA Studies. Package of materials submitted to the Fifth Session of the Regulatory Negotiation Committee, July 16–17, 1986.

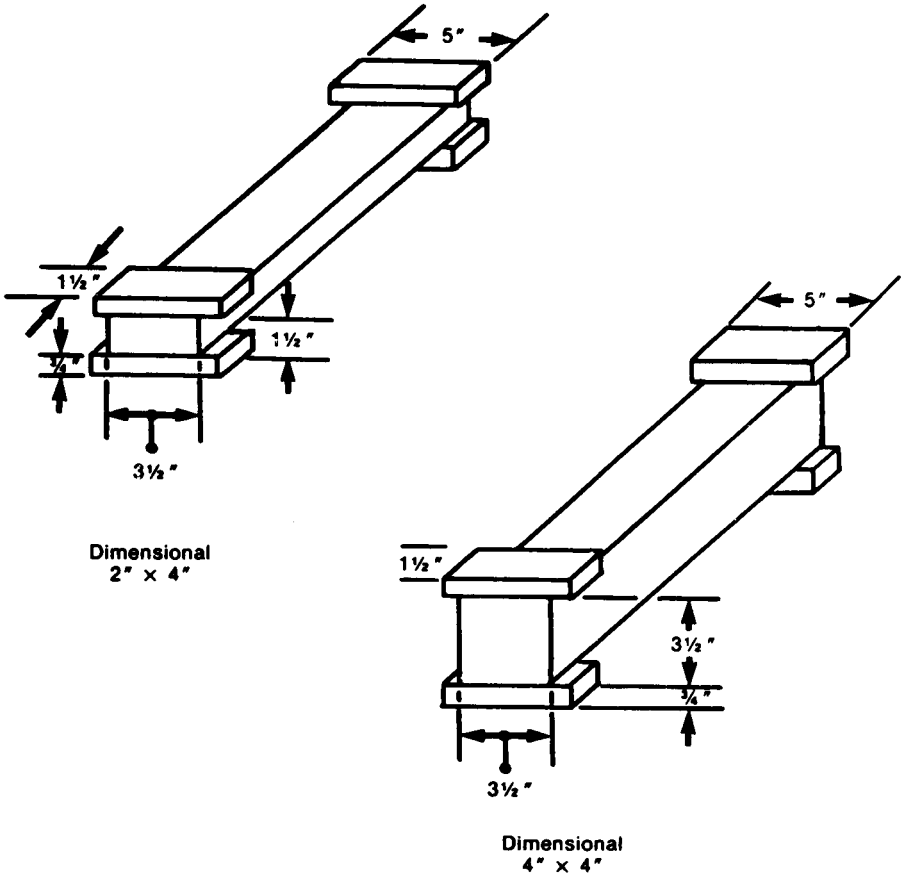

Figure 28-1. Test fuel spacer dimensions.

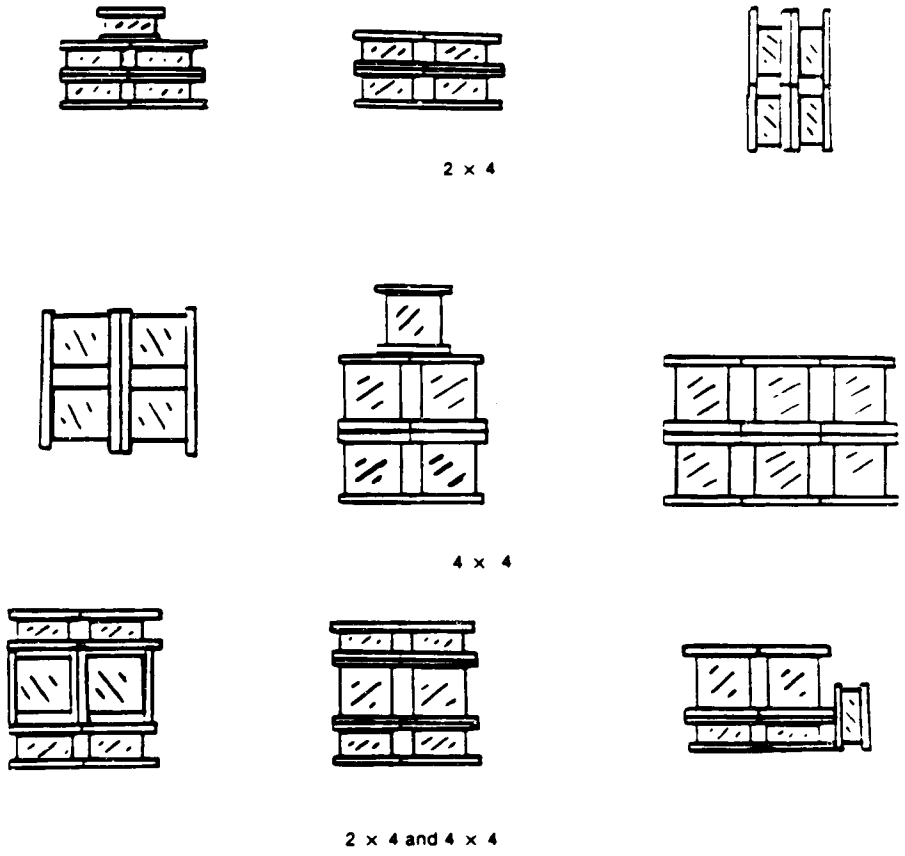

Figure 28 - 2. Test fuel crib arrangements

Appliance Identification

Appliance Manufacturer _____

Address _____

Agent and phone number _____

Name and Model number _____

Weight _____

Serial number _____

Design : Catalytic _____ Noncatalytic _____

Insert _____ Freestanding _____

Woodheater Description : (Attach figure showing air supplies and firebox configuration)

Materials of construction : _____

Air Introduction System : _____

Combustion Control Mechanisms : _____

Internal Baffles : _____

Other Features : _____

Catalyst Specifications

Manufacturer _____

Serial Number _____

Age _____(Hours)

Dimensions _____(in.)

Firebox Dimensions :

Volume _____(ft^3)

Length _____(in.)

Width _____(in.)

Height _____(in.)

Adjustments (Describe) _____ (in.)

Test Fuel Information
(For each Test Run)

Weight of Test Charge _____(lb)

Number of 2 x 4's _____

Number of 4 x 4's _____

Length of test pieces _____(in.)

Fuel Grade (Certification) _____

Fuel Moisture Content _____(%)

Diagram or Photograph of Test Fuel Crib

Figure 28-3. Wood Heater and Test Fuel Information.

Date _____ Sheet _____ of _____

Operator _____

Sampling Method _____

Wood Heater Information

Manufacturer_____

Model_____

Primary Air Setting _____

Secondary Air Setting _____

Thermostat Setting _____

Other Settings _____

Test Run Information

Test Run No. _____

Burn Rate_____

Room Temperature before/after ____/____

Barometric Pressure before/after ____/____

Relative Humidity before/after ____/____

Room Air Velocity before/after ____/____

Surface Temp Average Pretest_____end_____

Test Run Time (minutes)	Test Fuel Scale Reading (lb)	Surface Temperature					Catalyst Temperature		Flue Draft (in. H_2O)
							Inlet (°F)	Outlet (°F)	
(Pretest Period)									
(Test Run Start)									

8870452R

Figure 28 - 4. Test run wood heater operation data sheet

FIGURE 28–5—EXAMPLE CALCULATION OF WEIGHTED AVERAGE EMISSION RATE

Burn rate category	Test number	Burn rate (Dry-kg/hr)	Emissions (g/hr)
1	1	0.65	5.0
2[1]	2	0.85	6.7
2	3	0.90	4.7
2	4	1.00	5.3
3	5	1.45	3.8
4	6	2.00	5.1

[1] As permitted in Section 6.6, this test run may be omitted from the calculation of the weighted average emission rate because three runs were conducted for this burn rate category.

Test number	Burn rate	P_i	E_i	K_i
1	0.65	0.121	5.0	0.300
2	0.90	0.300	4.7	0.259
3	1.00	0.380	5.3	0.422
4	1.45	0.722	3.8	0.532
5	2.00	0.912	5.1	0.278

$K_1 = P_2 - P_o = 0.300 - 0 = 0.300$
$K_2 = P_3 - P_1 = 0.380 - 0.121 = 0.259$
$K_3 = P_4 - P_2 = 0.722 - 0.300 = 0.422$
$K_4 = P_5 - P_3 = 0.912 - 0.380 = 0.532$
$K_5 = P_6 - P_4 = 1 - 0.722 = 0.278$

$$\sum_{i=1}^{n} K_i = 0.300 + 0.259 + 0.422 + 0.532 + 0.278$$

$$\sum_{i=1}^{n} = 1.791$$

$$E_w = \frac{\sum_{i=1}^{n} (K_i E_i)}{\sum_{i=1}^{n} K_i}$$

E_w equals (0.3)(5.0) + (0.259)(4.7) + (0.422)(5.3) + (0.532)(3.8) + (0.278)(5.1) divided by 1.791
$E_w = 4.69$ g/hr.

TABLE 28–1—BURN RATE WEIGHTED PROBABILITIES FOR CALCULATING WEIGHTED AVERAGE EMISSION RATES

Burn rate (kg/hr-dry)	Cumulative Probability (P)
0.00	0.000
0.05	0.002
0.10	0.007
0.15	0.012
0.20	0.016
0.25	0.021
0.30	0.028
0.35	0.033
0.40	0.041
0.45	0.054
0.50	0.065
0.55	0.086
0.60	0.100
0.65	0.121
0.70	0.150
0.75	0.185
0.80	0.220
0.85	0.254
0.90	0.300
0.95	0.328

TABLE 28–1—BURN RATE WEIGHTED PROBABILITIES FOR CALCULATING WEIGHTED AVERAGE EMISSION RATES—Continued

Burn rate (kg/hr-dry)	Cumulative Probability (P)
1.00	0.380
1.05	0.407
1.10	0.460
1.15	0.490
1.20	0.550
1.25	0.572
1.30	0.620
1.35	0.654
1.40	0.695
1.45	0.722
1.50	0.750
1.55	0.779
1.60	0.800
1.65	0.825
1.70	0.840
1.75	0.857
1.80	0.875
1.85	0.882
1.90	0.895
1.95	0.906
2.00	0.912
2.05	0.920
2.10	0.925
2.15	0.932

TABLE 28–1—BURN RATE WEIGHTED PROBABILITIES FOR CALCULATING WEIGHTED AVERAGE EMISSION RATES—Continued

Burn rate (kg/hr-dry)	Cumulative Probability (P)
2.20	0.936
2.25	0.940
2.30	0.945
2.35	0.951
2.40	0.956
2.45	0.959
2.50	0.964
2.55	0.968
2.60	0.972
2.65	0.975
2.70	0.977
2.75	0.979
2.80	0.980
2.85	0.981
2.90	0.982
2.95	0.984
3.00	0.984
3.05	0.985
3.10	0.986
3.15	0.987
3.20	0.987
3.25	0.988
3.30	0.988
3.35	0.989
3.40	0.989
3.45	0.989
3.50	0.990
3.55	0.991
3.60	0.991
3.65	0.992
3.70	0.992
3.75	0.992
3.80	0.993
3.85	0.994
3.90	0.994
3.95	0.994
4.00	0.994
4.05	0.995
4.10	0.995
4.15	0.995
4.20	0.995
4.25	0.995
4.30	0.996
4.35	0.996
4.40	0.996
4.45	0.996
4.50	0.996
4.55	0.996
4.60	0.996
4.65	0.996
4.70	0.996
4.75	0.997
4.80	0.997
4.85	0.997
4.90	0.997
4.95	0.997
≥5.00	1.000

METHOD 28A—MEASUREMENT OF AIR TO FUEL RATIO AND MINIMUM ACHIEVABLE BURN RATES FOR WOOD-FIRED APPLIANCES

1. Applicability and Principle

1.1 Applicability. This method is applicable for the measurement of air to fuel ratios and minimum achievable burn rates, for determining whether a wood-fired appliance is an affected facility, as specified in 40 CFR 60.530.

1.2 Principle. A gas sample is extracted from a location in the stack of a wood-fired appliance while the appliance is operating at a prescribed set of conditions. The gas sample is analyzed for percent carbon dioxide (CO_2), percent oxygen (O_2), and percent carbon monoxide (CO). These stack gas components are measured for determining dry molecular weight of exhaust gas. Total moles of exhaust gas are determined stoichiometrically. Air to fuel ratio is determined by relating the mass of dry combustion air to the mass of dry fuel consumed.

2. Definitions

2.1 Burn Rate, Firebox, Secondary Air Supply, Test Facility, Test Fuel Charge, Test Fuel Crib, Test Fuel Loading Density, Test Fuel Piece, Test Run, Usable Firebox Volume, and Wood Heater. Same as Method 28, Sections 2.1 and 2.3 to 2.12.

2.2 Air to Fuel Ratio. Ratio of the mass of dry combustion air introduced into the firebox, to the mass of dry fuel consumed (grams of dry air per gram of dry wood burned).

3. Apparatus

3.1 Test Facility. Insulated Solid Pack Chimney, Platform Scale and Monitor, Room Temperature Monitor, Balance, Moisture Meter, Anemometer, Barometer, Draft Gauge, and Humidity Gauge. Same as Method 28, Sections 3.1, 3.2, and 3.4 to 3.10, respectively.

3.2 Sampling System. Probe, Condenser, Valve, Pump, Rate Meter, Flexible Bag, Pressure Gauge, and Vacuum Gauge. Same as Method 3, Sections 2.2.1 to 2.2.8, respectively. The sampling systems described in Method 5H, Sections 2.2.1, 2.2.2, and 2.2.3, may be used.

3.3 Analysis. Orsat analyzer, same as Method 3, Section 2.3; or instrumental analyzers, same as Method 5H, Sections 2.2.4 and 2.2.5, for CO_2 and CO analyzers, except use a CO analyzer with a range of 0 to 5 percent and use a CO_2 analyzer with a range of 0 to 5 percent. Use an O_2 analyzer capable of providing a measure of O_2 in the range of 0 to 25 percent by volume at least once every 10 minutes. Prepare cylinder gases for the three analyzers as described in Method 5H, Section 3.3.

4. Test Preparation

4.1 Test Facility, Wood Heater Appliance Installation, and Test Facility Conditions. Same as Method 28, Sections 4.1.1 and 4.1.2, respectively, with the exception that barometric dampers or other devices designed to introduce dilution air downstream of the firebox shall be sealed.

4.2 Wood Heater Air Supply Adjustments. This section describes how dampers are to be

set or adjusted and air inlet ports closed or sealed during Method 28A tests. The specifications in this section are intended to ensure that affected facility determinations are made on the facility configurations that could reasonably be expected to be employed by the user. They are also intended to prevent circumvention of the standard through the addition of an air port that would often be blocked off in actual use. These specifications are based on the assumption that consumers will remove such items as dampers or other closure mechanism stops if this can be done readily with household tools; that consumers will block air inlet passages not visible during normal operation of the appliance using aluminum tape or parts generally available at retail stores; and that consumers will cap off any threaded or flanged air inlets. They also assume that air leakage around glass doors, sheet metal joints or through inlet grilles visible during normal operation of the appliance would not be further blocked or taped off by a consumer.

It is not the intention of this section to cause an appliance that is clearly designed, intended, and, in most normal installations, used as a fireplace to be converted into a wood heater for purposes of applicability testing. Such a fireplace would be identifiable by such features as large or multiple glass doors or panels that are not gasketed, relatively unrestricted air inlets intended, in large part, to limit smoking and fogging of glass surfaces, and other aesthetic features not normally included in wood heaters.

4.2.1 Adjustable Air Supply Mechanisms. Any commercially available flue damper, other adjustment mechanism or other air inlet port that is designed, intended or otherwise reasonably expected to be adjusted or closed by consumers, installers, or dealers and which could restrict air into the firebox shall be set so as to achieve minimum air into the firebox, i.e., closed off or set in the most closed position.

Flue dampers, mechanisms and air inlet ports which could reasonably be expected to be adjusted or closed would include:

(a) All internal or externally adjustable mechanisms (including adjustments that affect the tightness of door fittings) that are accessible either before and/or after installation.

(b) All mechanisms, other inlet ports, or inlet port stops that are identified in the owner's manual or in any dealer literature as being adjustable or alterable. For example, an inlet port that could be used to provide access to an outside air duct but which is identified as being closable through use of additional materials whether or not they are supplied with the facility.

(c) Any combustion air inlet port or commercially available flue damper or mechanism stop, which would readily lend itself to closure by consumers who are handy with household tools by the removal of parts or the addition of parts generally available at retail stores (e.g., addition of a pipe cap or plug, addition of a small metal plate to an inlet hole on a nondecorative sheet metal surface, or removal of riveted or screwed damper stops).

(d) Any flue damper, other adjustment mechanisms or other air inlet ports that are found and documented in several (e.g., a number sufficient to reasonably conclude that the practice is not unique or uncommon) actual installations as having been adjusted to a more closed position, or closed by consumers, installers, or dealers.

4.2.2 Air Supply Adjustments During Test. The test shall be performed with all air inlets identified under this section in the closed or most closed position or in the configuration which otherwise achieves the lowest air inlet (e.g., greatest blockage).

For the purposes of this section, air flow shall not be minimized beyond the point necessary to maintain combustion or beyond the point that forces smoke into the room.

Notwithstanding Section 4.2.1, any flue damper, adjustment mechanism or air inlet port (whether or not equipped with flue dampers or adjusting mechanisms) that is visible during normal operation of the appliance and which could not reasonably be closed further or blocked except through means that would significantly degrade the aesthetics of the facility (e.g., through use of duct tape) will not be closed further or blocked.

4.3 Test Fuel Properties and Test Fuel Charge Specifications. Same as Method 28, Sections 4.2 to 4.3, respectively.

4.4 Sampling System.

4.4.1 Sampling Location. Same as Method 5H, Section 5.1.2.

4.4.2 Sampling System Set Up. Set up the sampling equipment as described in Method 3, Section 3.2, or as in Method 3A, Section 7.

5. Procedures

5.1 Pretest Preparation. Same as Method 28, Sections 6.2.1 and 6.2.3 to 6.2.5.

5.2 Pretest Ignition. Same as Method 28, Section 6.3. Set the wood heater air supply settings to achieve a burn rate in Category 1 or the lowest achievable burn rate (see Section 4.2).

5.3 Test Run. Same as Method 28, Section 6.4. Begin sample collection at the start of the test run as defined in Method 28, Section 6.4.1. If Method 3 is used, collect a minimum of two bag samples simultaneously at a constant sampling rate for the duration of the test run. A minimum sample volume of 30 l per bag is recommended. If instrumental gas concentration measurement procedures are used, conduct the gas measurement system performance specifications checks as described in Method 5H, Sections 6.7, 6.8, and 6.9. The zero drift and calibration drift limits

for all three analyzers shall be 0.2 percent O_2, CO_2, or CO, as applicable, or less. Other measurement system performance specifications are as defined in Method 5H, Section 4. Sample at a constant rate for the duration of the test run.

5.3.1 Data Recording. Record wood heater operational data, test facility temperature, sample train flow rate, and fuel weight data at 10-minute intervals.

5.3.2 Test Run Completion. Same as Method 28, Section 6.4.6.

5.4 Analysis Procedure.

5.4.1 Method 3 Integrated Bag Samples. Within 4 hours after the sample collection, analyze each bag sample for percent CO_2, O_2, and CO using an Orsat analyzer as described in Method 3, Sections 4.2.5 through 4.2.7.

5.4.2 Instrumental Analyzers. Average the percent CO_2, CO, and O_2 values for the test run.

5.5 Quality Control Procedures.

5.5.1 Data Validation. The following quality control procedure is suggested to provide a check on the quality of the data.

5.5.1.1 Calculate a fuel factor, F_0, using the following equation:

$$F_0 = \left(\frac{20.9 - \%O_2}{\%CO_2} \right) \qquad \text{Eq. 28a-4}$$

where:

$\%O_2$ Percent O_2 by volume (dry basis).
$\%CO_2$ Percent CO_2 by volume (dry basis).
20.9 Percent O_2 by volume in ambient air.

If CO is present in quantities measurable by this method, adjust the O_2 and CO_2 values before performing the calculation for F_0 as follows:

$\%CO_2$ (adj) = $\%CO_2$ + %CO
$\%O_2$ (adj) = $\%O_2$ − 0.5 %CO

where:

%CO = Percent CO by volume (dry basis).

5.5.1.2 Compare the calculated F_0 factor with the expected F_0 range for wood (1.000 - 1.120). Calculated F_0 values beyond this acceptable range should be investigated before accepting the test results. For example, the strength of the solutions in the gas analyzer and the analyzing technique should be checked by sampling and analyzing a known concentration, such as air. If no detectable or correctable measurement error can be identified, the test should be repeated. Alternatively, determine a range of air to fuel ratio results that could include the correct value by using an F_0 value of 1.05 and calculating a potential range of CO_2 and O_2 values. Acceptance of such results will be based on whether the calculated range includes the exemption limit and the judgment of the administrator.

5.5.1.3 Method 3 Analyses. Compare the results of the analyses of the two bag samples. If all the gas components (O_2, CO, and CO_2) values for the two analyses agree within 0.5 percent (e.g., 6.0 percent O_2 for bag 1 and 6.5 percent O_2 for bag 2, agree within 0.5 percent), the results of the bag analyses may be averaged for the calculations in Section 6. If the analysis results do not agree within 0.5 percent for each component, calculate the air-to-fuel ratio using both sets of analyses and report the results.

6. Calculations

Carry out calculations, retaining at least one extra decimal figure beyond that of the acquired data. Round off figure after the final calculation. Other forms of the equations may be used as long as they give equivalent results.

6.1 Nomenclature.

M_d=Dry molecular weight, g/g-mole(lb/lb-mole).
$\%CO_2$=Percent CO_2 by volume (dry basis).
$\%O_2$=Percent O_2 by volume (dry basis).
%CO=Percent CO by volume (dry basis).
$\%N_2$=Percent N_2 by volume (dry basis).
N_T=Total gram-moles of dry exhaust gas per kg of wood burned (lb-moles/lb).
Y_{CO2}=Measured mole fraction of CO_2 (e.g., 10 percent CO_2=.10 mole fraction), g/g-mole (lb/lb-mole).
Y_{CO}=Measured mole fraction of CO (e.g., 1 percent CO=.01 mole fraction), g/g-mole (lb/lb-mole).
Y_{HC}=Assumed mole fraction of HC (dry as CH_4)
=0.0088 for catalytic wood heaters;
=0.0132 for noncatalytic wood heaters.
=0.0080 for pellet-fired wood heaters.
0.280=Molecular weight of N_2 or CO, divided by 100.
0.320=Molecular weight of O_2 divided by 100.
0.440=Molecular weight of CO_2 divided by 100.
42.5=Gram-moles of carbon in 1 kg of dry wood assuming 51 percent carbon by weight dry basis (.0425 lb/lb).
510=Grams of carbon in exhaust gas per kg of wood burned.
1,000=Grams in 1 kg.

6.2 Dry Molecular Weight. Use Equation 28a–1 to calculate the dry molecular weight of the stack gas.

$$M_d = 0.440(\%CO_2) + 0.320(\%O)_2) + 0.280(\%N_2 + \%CO) \qquad \text{Eq. 28a–1}$$

NOTE: The above equation does not consider argon in air (about 0.9 percent, molecular weight of 37.7). A negative error of about 0.4 percent is introduced. The tester may opt to include argon in the analysis using procedures subject to approval of the Administrator.

6.3 Dry Moles of Exhaust Gas. Use Equation 28a–2 to calculate the total moles of dry exhaust gas produced per kilogram of dry wood burned.

$$N_T = \left(\frac{42.5}{(Y_{CO2} + Y_{CO} + Y_{HC})} \right) \quad \text{Eq. 28a-2}$$

6.4 Air to Fuel Ratio. Use Equation 28a–3 to calculate the air to fuel ratio on a dry mass basis.

$$A/F = \left(\frac{(N_T \times M_d) - (510)}{(1000)} \right) \quad \text{Eq. 28a-3}$$

6.5 Burn Rate. Calculate the fuel burn rate as in Method 28, Section 8.3.

7. Bibliography

Same as Method 3, Section 7, and Method 5H, Section 7.

METHOD 29—DETERMINATION OF METALS EMISSIONS FROM STATIONARY SOURCES

1. Applicability and Principle

1.1 Applicability. This method is applicable to the determination of antimony (Sb), arsenic (As), barium (Ba), beryllium (Be), cadmium (Cd), chromium (Cr), cobalt (Co), copper (Cu), lead (Pb), manganese (Mn), mercury (Hg), nickel (Ni), phosphorus (P), selenium (Se), silver (Ag), thallium (T1), and zinc (Zn) emissions from stationary sources. This method may be used to determine particulate emissions in addition to the metals emissions if the prescribed procedures and precautions are followed.

1.1.1 Hg emissions can be measured, alternatively, using EPA Method 101A of Appendix B, 40 CFR Part 61. Method 101–A measures only Hg but it can be of special interest to sources which need to measure both Hg and Mn emissions.

1.2 Principle. A stack sample is withdrawn isokinetically from the source, particulate emissions are collected in the probe and on a heated filter, and gaseous emissions are then collected in an aqueous acidic solution of hydrogen peroxide (analyzed for all metals including Hg) and an aqueous acidic solution of potassium permanganate (analyzed only for Hg). The recovered samples are digested, and appropriate fractions are analyzed for Hg by cold vapor atomic absorption spectroscopy (CVAAS) and for Sb, As, Ba, Be, Cd, Cr, Co, Cu, Pb, Mn, Ni, P, Se, Ag, Tl, and Zn by inductively coupled argon plasma emission spectroscopy (ICAP) or atomic absorption spectroscopy (AAS). Graphite furnace atomic absorption spectroscopy (GFAAS) is used for analysis of Sb, As, Cd, Co, Pb, Se, and Tl if these elements require greater analytical sensitivity than can be obtained by ICAP. If one so chooses, AAS may be used for analysis of all listed metals if the resulting in-stack method detection limits meet the goal of the testing program. Similarly, inductively coupled plasma-mass spectroscopy (ICP–MS) may be used for analysis of Sb, As, Ba, Be, Cd, Cr, Co, Cu, Pb, Mn, Ni, As, Tl and Zn.

2. Range, Detection Limits, Precision, and Interferences

2.1 Range. For the analysis described and for similar analyses, the ICAP response is linear over several orders of magnitude. Samples containing metal concentrations in the nanograms per ml (ng/ml) to micrograms per ml (μg/ml) range in the final analytical solution can be analyzed using this method. Samples containing greater than approximately 50 μg/ml As, Cr, or Pb should be diluted to that level or lower for final analysis. Samples containing greater than approximately 20 μg/ml of Cd should be diluted to that level before analysis.

2.2 Analytical Detection Limits. (NOTE: See section 2.3 for the description of in-stack detection limits.)

2.2.1 ICAP analytical detection limits for the sample solutions (based on Method 6010 in EPA Publication SW–846, Third Edition (November 1986) including updates I, II, IIA, and IIB, as incorporated by reference in §60.17(i)) are approximately as follows: Sb (32 ng/ml), As (53 ng/ml), Ba (2 ng/ml), Be (0.3 ng/ml), Cd (4 ng/ml), Cr (7 ng/ml), Co (7 ng/ml), Cu (6 ng/ml), Pb (42 ng/ml), Mn (2 ng/ml), Ni (15 ng/ml), P (75 ng/ml), Se (75 ng/ml), Ag (7 ng/ml), Tl (40 ng/ml), and Zn (2 ng/ml). ICP–MS analytical detection limits (based on based on Method 6020 in EPA Publication SW–846, Third Edition (November 1986) as incorporated by reference in §60.17(i)) are lower generally by a factor of ten or more. Be is lower by a factor of three. The actual sample analytical detection limits are sample dependent and may vary due to the sample matrix.

2.2.2 The analytical detection limits for analysis by direct aspiration AAS are approximately as follow: Sb (200 ng/ml), As (2 ng/ml), Ba (100 ng/ml), Be (5 ng/ml), Cd (5 ng/ml), Cr (50 ng/ml), Co (50 ng/ml), Cu (20 ng/ml), Pb (100 ng/ml), Mn (10 ng/ml), Ni (40 ng/ml), Se (2 ng/ml), Ag (10 ng/ml), Tl (100 ng/ml), and Zn (5 ng/ml).

2.2.3 The detection limit for Hg by CVAAS (on the resultant volume of the *disgestion* of the aliquots taken for Hg analyses) can be approximately 0.02 to 0.2ng/ml, depending upon the type of CVAAS analytical instrument used.

2.2.4 The use of GFAAS can enhance the detection limits compared to direct aspiration AAS as follows: Sb (3 ng/ml), As (1 ng/ml), Be (0.2 ng/ml), Cd (0.1 ng/ml), Cr (1 ng/ml), Co (1 ng/ml), Pb (1 ng/ml), Se (2 ng/ml), and T1 (ng/ml).

2.3 *In-stack Detection Limits.*

2.3.1 For test planning purposes in-stack detection limits can be developed by using the following information (1) the procedures

described in this method, (2) the analytical detection limits described in Section 2.2 and in EPA Publication SW–846, Third Edition (November 1986) including updates I, II, IIA and IIB, as incorporated by reference in §60.17(i), (3) the normal volumes of 300 ml (Analytical Fraction 1) for the front-half and 150 ml (Analytical Fraction 2A) for the back-half samples, and (4) a stack gas sample volume of 1.25 m^3. The resultant in-stack method detection limits for the above set of conditions are presented in Table 29–1 and were calculated by using Eq. 29–1.

$A \times B/C = D$ Eq. 29–1

Where:

A=Analytical detectin limit, μg/ml.
B=Liquid volume of digested sample prior to aliquotting for analysis, Ml.
C=Stack sample gas volume, dsm^3.
D=In-stack detection limit, $\mu g/m^3$.

TABLE 29–1.—IN-STACK METHOD DETECTION LIMITS ($\mu G/M^3$) FOR THE FRONT-HALF, THE BACK-HALF, AND THE TOTAL SAMPLING TRAIN USING ICAP AND AAS

Metal	Front-half: Probe and filter	Back-half: Impingers 1–3	Back-half: Impingers (4–6)[a]	Total train:
Antimony	[1] 7.7 (0.7)	[1] 3.8 (0.4)		[1] 11.5 (1.1)
Arsenic	[1] 12.7 (0.3)	[1] 6.4 (0.1)		[1] 19.1 (0.4)
Barium	0.5	0.3		0.8
Beryllium	[1] 0.07 (0.05)	[1] 0.04 (0.03)		[1] 0.11 (0.08)
Cadmium	[1] 1.0 (0.02)	[1] 0.5 (0.01)		[1] 1.5 (0.03)
Chromium	[1] 1.7 (0.2)	[1] 0.8 (0.1)		[1] 2.5 (0.3)
Cobalt	[1] 1.7 (0.2)	[1] 0.8 (0.1)		[1] 2.5 (0.3)
Copper	1.4	0.7		2.1
Lead	[1] 10.1 (0.2)	[1] 5.0 (0.1)		[1] 15.1 (0.3)
Manganese	[1] 0.5 (0.2)	[1] 0.2 (0.1)		[1] 0.7 (0.3)
Mercury	[2] 0.06	[2] 0.3	[2] 0.2	[2] 0.56
Nickel	3.6	1.8		5.4
Phosphorus	18	9		27
Selenium	[1] 18 (0.5)	[1] 9 (0.3)		[1] 27 (0.8)
Silver	1.7	0.9		2.6
Thallium	[1] 9.6 (0.2)	[1] 4.8 (0.1)		[1] 14.4 (0.3)
Zinc	0.5	0.3		0.8

[a] Mercury analysis only.
[1] Detection limit when analyzed by GFAAS.
[2] Detection limit when analyzed by CVAAS, estimated for Back-Half and Total Train. See Sections 2.2 and 5.4.3.
Note: Actual method in-stack detection limits may vary from these values, as described in Section 2.3.3.

2.3.2 To ensure optimum precision/resolution in the analyses, the target concentrations of metals in the analytical solutions should be at least ten times their respective analytical detection limits. Under certain conditions, and with greater care in the analytical procedure, these concentrations can be as low as approximately three times the respective analytical detection limits without seriously impairing the precision of the analyses. On at least one sample run in the source test, and for each metal analyzed, perform either repetitive analyses, Method of Standard Additions, serial dilution, or matrix spike addition, etc., to document the quality of the data.

2.3.3 Actual in-stack method detection limits are based on actual source sampling parameters and analytical results as described above. If required, the method in-stack detection limits can be improved over those shown in Table 29–1 for a specific test by either increasing the sampled stack gas volume, reducing the total volume of the digested samples, improving the analytical detection limits, or any combination of the three. For extremely low levels of *Hg only*, the aliquot size selected for digestion and analysis can be increased to as much as 10 ml, thus improving the in-stack detection limit by a factor of ten compared to a 1 ml aliquot size.

2.3.3.1 A nominal one hour sampling run will collect a stack gas sampling volume of about 1.25 m^3. If the sampling time is increased to four hours and 5 m^3 are collected, the in-stack method detection limits would be improved by a factor of four compared to the values shown in Table 29–1.

2.3.3.2 The in-stack detection limits assume that all of the sample is digested and the final liquid volumes for analysis are the normal values of 300 ml for Analytical Fraction 1, and 150 ml for Analytical Fraction 2A. If the volume of Analytical Fraction 1 is reduced from 300 to 30 ml, the in-stack detection limits for that fraction of the sample would be improved by a factor of ten. If the volume of Analytical Fraction 2A is reduced from 150 to 25 ml, the in-stack detection limits for that fraction of the sample would be improved by a factor of six. Matrix effect checks are necessary on sample analyses and typically are of much greater significance for samples that have been concentrated to

less than the normal original sample volume. Reduction of Analytical Fractions 1 and 2A to volumes of less than 30 and 25 ml, respectively, could interfere with the redissolving of the residue and could increase interference by other compounds to an intolerable level.

2.3.3.3 When both of the modifications described in Sections 2.3.3.1 and 2.3.3.2 are used simultaneously on one sample, the resultant improvements are multiplicative. For example, an increase in stack gas volume by a factor of four and a reduction in the total liquid sample digested volume of both Analytical Fractions 1 and 2A by a factor of six would result in an improvement by a factor of twenty-four of the in-stack method detection limit.

2.4 Precision. The precision (relative standard deviation) for each metal detected in a method development test performed at a sewage sludge incinerator were found to be as follows: Sb (12.7 percent), As (13.5 percent), Ba (20.6 percent), Cd (11.5 percent), Cr (11.2 percent), Cu (11.5 percent), Pb (11.6 percent), P (14.6 percent), Se (15.3 percent), Tl (12.3 percent), and Zn (11.8 percent). The precision for Ni was 7.7 percent for another test conducted at a source simulator. Be, Mn, and Ag were not detected in the tests. However, based on the analytical detection limits of the ICAP for these metals, their precisions could be similar to those for the other metals when detected at similar levels.

2.5 Interferences. Iron (Fe) can be a spectral interference during the analysis of As, Cr, and Cd by ICAP. Aluminum (Al) can be a spectral interference during the analysis of As and Pb by ICAP. Generally, these interferences can be reduced by diluting the analytical sample, but such dilution raises the in-stack detection limits. Background and overlap corrections may be used to adjust for spectral interferences. Refer to Method 6010 in EPA Publication SW–846 Third Edition (November 1986) including updates I, II, IIA and IIB, as incorporated by reference in §60.17(i) the other analytical methods used for details on potential interferences to this method. For all GFAAS analyses, use matrix modifiers to limit interferences, and matrix match all standards.

3. Apparatus

3.1 Sampling. A schematic of the sampling train is shown in Figure 29–1. It has general similarities to the Method 5 train.

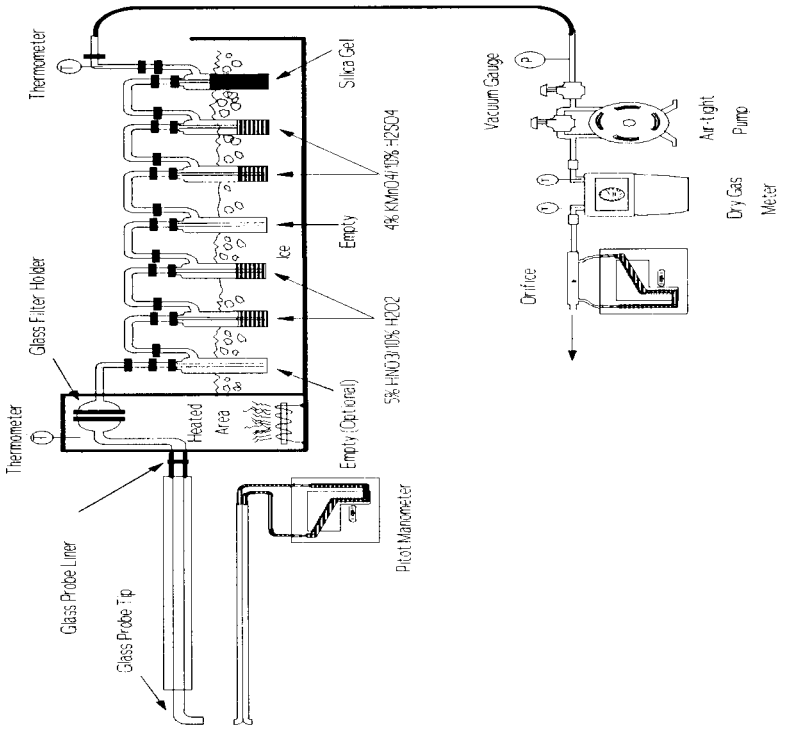

Figure 29-1. Sampling train.

3.1.1 Probe Nozzle (Probe Tip) and Borosilicate or Quartz Glass Probe Liner. Same as Method 5, Sections 2.1.1 and 2.1.2, except that glass nozzles are required unless alternate tips are constructed of materials that are free from contamination and will not interfere with the sample. If a probe tip other than glass is used, no correction to the

sample test results to compensate for the nozzle's effect on the sample is allowed. Probe fittings of plastic such as Teflon, polypropylene, etc. are recommended instead of metal fittings to prevent contamination. If one chooses to do so, a single glass piece consisting of a combined probe tip and probe liner may be used.

3.1.2 Pitot Tube and Differential Pressure Gauge. Same as Method 2, Sections 2.1 and 2.2, respectively.

3.1.3 Filter Holder. Glass, same as Method 5, Section 2.1.5, except use a Teflon filter support or other non-metallic, non-contaminating support in place of the glass frit.

3.1.4 Filter Heating System. Same as Method 5, Section 2.1.6.

3.1.5 Condenser. Use the following system for condensing and collecting gaseous metals and determining the moisture content of the stack gas. The condensing system shall consist of four to seven impingers connected in series with leak-free ground glass fittings or other leak-free, non-contaminating fittings. Use the first impinger as a moisture trap. The second impinger (which is the first HNO_3/H_2O_2 impinger) shall be identical to the first impinger in Method 5. The third impinger (which is the second HNO_3/H_2O_2 impinger) shall be a Greenburg Smith impinger with the standard tip as described for the second impinger in Method 5, Section 2.1.7. The fourth (empty) impinger and the fifth and sixth (both acidified $KMnO_4$) impingers are the same as the first impinger in Method 5. Place a thermometer capable of measuring to within 1 °C (2 °F) at the outlet of the last impinger. If no Hg analysis is planned, then the fourth, fifth, and sixth impingers are not used.

3.1.6 Metering System, Barometer, and Gas Density Determination Equipment. Same as Method 5, Sections 2.1.8 through 2.1.10, respectively.

3.1.7 Teflon Tape. For capping openings and sealing connections, if necessary, on the sampling train.

3.2. Sample Recovery. Same as Method 5, Sections 2.2.1 through 2.2.8 (Probe-Liner and Probe-Nozzle Brushes or Swabs, Wash Bottles, Sample Storage Containers, Petri Dishes, Glass Graduated Cylinder, Plastic Storage Containers, Funnel and Rubber Policeman, and Glass Funnel), respectively, with the following exceptions and additions:

3.2.1 Non-metallic Probe-Liner and Probe-Nozzle Brushes or Swabs. Use non-metallic probe-liner and probe-nozzle brushes or swabs for quantitative recovery of materials collected in the front-half of the sampling train.

3.2.2 Sample Storage Containers. Use glass bottles (see the *Precaution:* in Section 4.3.2 of this Method) with Teflon-lined caps that are non-reactive to the oxidizing solutions, with capacities of 1000- and 500-ml, for storage of acidified $KMnO_4$- containing samples and blanks. Glass or polyethylene bottles may be used for other sample types.

3.2.3 Graduated Cylinder. Glass or equivalent.

3.2.4 Funnel. Glass or equivalent.

3.2.5 Labels. For identifying samples.

3.2.6 Polypropylene Tweezers and/or Plastic Gloves. For recovery of the filter from the sampling train filter holder.

3.3 Sample Preparation and Analysis.

3.3.1 Volumetric Flasks, 100-ml, 250-ml, and 100-ml. For preparation of standards and sample dilutions.

3.3.2 Graduated Cylinders. For preparation of reagents.

3.3.3 Parr® Bombs or Microwave Pressure Relief Vessels with Capping Station (CEM Corporation model or equivalent). For sample digestion.

3.3.4 Beakers and Watch Glasses. 250-ml beakers, with watch glass covers, for sample digestion.

3.3.5 Ring Stands and Clamps. For securing equipment such as filtration apparatus.

3.3.6 Filter Funnels. For holding filter paper.

3.3.7 Disposable Pasteur Pipets and Bulbs.

3.3.8 Volumetric Pipets.

3.3.9 Analytical Balance. Accurate to within .01 mg.

3.3.10 Microwave or Conventional Oven. For heating samples at fixed power levels or temperatures, respectively.

3.3.11 Hot Plates.

3.3.12 Atomic Absorption Spectrometer (AAS). Equipped with a background corrector.

3.3.12.1 Graphite Furnace Attachment. With Sb, As, Cd, Co, Pb, Se, and Tl hollow cathode lamps (HCLs) or electrodeless discharge lamps (EDLs). Same as Methods 7041 (Sb), 7060 (As), 7131 (Cd), 7201 (Co), 7421 (Pb), 7740 (Se), and 7841 (Tl) in EPA publication SW–846 Third Edition (November 1986) including updates I, II, IIA and IIB, as incorporated by reference in §60.17(i).

3.3.12.2 Cold Vapor Mercury Attachment. With a mercury HCL or EDL, an air recirculation pump, a quartz cell, an aerator apparatus, and a heat lamp or desiccator tube. The heat lamp shall be capable of raising the temperature at the quartz cell by 10 °C above ambient, so that no condensation forms on the wall of the quartz cell. Same as Method 6020 in EPA publication SW–846 Third Edition (November 1986) including updates I, II, IIA and IIB, as incorporated by reference in §60.17(i). See NOTE NO. 2: Section 5.4.3 for other acceptable approaches for analysis of Hg in which analytical detection limits of 0.002 ng/ml were obtained.

3.3.13 Inductively Coupled Argon Plasma Spectrometer. With either a direct or sequential reader and an alumina torch. Same as EPA Method 6010 in EPA publication SW–846 Third Edition (November 1986) including

updates I, II, IIA and IIB, as incorporated by reference in §60.17(i).

3.3.14 Inductively Coupled Plasma-Mass Spectrometer. Same as EPA Method 6020 in EPA publication SW–846 Third Edition (November 1986) including updates I, II, IIA and IIB, as incorporated by reference in §60.17(i).

4. Reagents

4.1 Unless otherwise indicated, it is intended that all reagents conform to the specifications established by the Committee on Analytical Reagents of the American Chemical Society, where such specifications are available. Otherwise, use the best available grade.

4.2 Sampling Reagents.

4.2.1 Sample Filters. Without organic binders. The filters shall contain less than 1.3 μg/in.^{2} of each of the metals to be measured. Analytical results provided by filter manufacturers stating metals content of the filters are acceptable. However, if no such results are available, analyze filter blanks for each target metal prior to emission testing. Quartz fiber filters meeting these requirements are recommended. However, if glass fiber filters become available which meet these requirements, they may be used. Filter efficiencies and unreactiveness to sulfur dioxide (SO_2) or sulfur trioxide (SO_3) shall be as described in Section 3.1.1 of Method 5.

4.2.2 Water. To conform to ASTM Specification D1193–77, Type II (incorporated by reference—See §60.17). If necessary, analyze the water for all target metals prior to field use. All target metals should be less than 1 ng/ml.

4.2.3 Nitric Acid (HNO_3). Concentrated. Baker Instra-analyzed or equivalent.

4.2.4 Hydrochloric Acid (HCL). Concentrated. Baker Instra-analyzed or equivalent.

4.2.5 Hydrogen Peroxide (H_2O_2), 30 Percent (V/V).

4.2.6 Potassium Permanganate ($KMnO_4$).

4.2.7 Sulfuric Acid (H_2SO_4). Concentrated.

4.2.8 Silica Gel and Crushed Ice. Same as Method 5, Sections 3.1.2 and 3.1.4, respectively.

4.3 Pretest Preparation of Sampling Reagents.

4.3.1 HNO_3/H_2O_2 Absorbing Solution, 5 Percent HNO_3/10 Percent H_2O_2. Add carefully with stirring 50 ml of concentrated HNO_3 to a 1000-ml volumeric flask containing approximately 500 ml of water, and then add carefully with stirring 333 ml of 30 percent H_2O_2. Dilute to volume with water. Mix well. This reagent shall contain less than 2 ng/ml of each target metal.

4.3.2 Acidic $KMnO_4$ Absorbing Solution, 4 Percent $KMnO_4$ (W/V), 10 Percent H_2SO_4 (V/V). Prepare fresh daily. Mix carefully, with stirring, 100 ml of concentrated H_2SO_4 into approximately 800 ml of water, and add water with stirring to make a volume of 1 liter: this solution is 10 percent H_2SO_4 (V/V). Dissolve, with stirring, 40 g of $KMnO_4$ into 10 percent H_2SO_4 (V/V) and add 10 percent H_2SO_4 (V/V) with stirring to make a volume of 1 liter. Prepare and store in glass bottles to prevent degradation. This reagent shall contain less than 2 ng/ml of Hg.

Precaution: To prevent autocatalytic decomposition of the permanganate solution, filter the solution through Whatman 541 filter paper. Also, due to the potential reaction of the potassium permanganate with the acid, there could be pressure buildup in the solution storage bottle. Therefore these bottles shall not be fully filled and shall be vented to relieve excess pressure and prevent explosion potentials. Venting is required, but not in a manner that will allow contamination of the solution. A No. 70–72 hole drilled in the container cap and Teflon liner has been used.

4.3.3 HNO_3, 0.1 N. Add with stirring 6.3 ml of concentrated HNO_3 (70 percent) to a flask containing approximately 900 ml of water. Dilute to 1000 ml with water. Mix well. This reagent shall contain less than 2 ng/ml of each target metal.

4.3.4 HCl, 8 N. Carefully add with stirring 690 ml of concentrated HCl to a flask containing 250 ml of water. Dilute to 1000 ml with water. Mix well. This reagent shall contain less than 2 ng/ml of Hg.

4.4 Glassware Cleaning Reagents.

4.4.1 HNO_3, Concentrated. Fisher ACS grade or equivalent.

4.4.2 Water. To conform to ASTM Specification D1193–77, Type II (incorporated by reference—See §60.17).

4.4.3 HNO_3, 10 Percent (V/V). Add with stirring 500 ml of concentrated HNO_3 to a flask containing approximately 4000 ml of water. Dilute to 5000 ml with water. Mix well. This reagent shall contain less than 2 ng/ml of each target metal.

4.5 Sample Digestion and Analysis Reagents.

The metals standards, except Hg, may also be made from solid chemicals as described in Citation 3 of the Bibliography. Refer to Citations 1, 2, or 5 of the Bibliography for additional information on Hg standards. The 1000 μg/ml Hg stock solution standard may be made according to Section 6.2.5 of Method 101A.

4.5.1 HCL, Concentrated.

4.5.2 Hydrofluoric Acid (HF), Concentrated.

4.5.3 HNO_3, Concentrated. Baker Instra-analyzed or equivalent.

4.5.4 HNO_3, 50 Percent (V/V). Add with stirring 125 ml of concentrated HNO_3 to 100 ml of water. Dilute to 250 ml with water. Mix well. This reagent shall contain less than 2 ng/ml of each target metal.

4.5.5 HNO_3, 5 Percent (V/V). Add with stirring 50 ml of concentrated HNO_3 to 800 ml of water. Dilute to 1000 ml with water. Mix

well. This reagent shall contain less than 2 ng/ml of each target metal.

4.5.6 Water. To conform to ASTM Specification D1193–77, Type II (incorporated by reference—See §60.17).

4.5.7 Hydroxylamine Hydrochloride and Sodium Chloride Solution. See Citation 2 of the Bibliography for preparation.

4.5.8 Stannous Chloride. See Citation 2 of the Bibliography for preparation.

4.5.9 $KMnO_4$, 5 Percent (W/V). See Citation 2 of the Bibliography for preparation.

4.5.10 H_2SO_4, Concentrated.

4.5.11 Potassium Persulfate, 5 Percent (W/V). See Citation 2 of the Bibliography for preparation.

4.5.12 Nickel Nitrate, Ni $(NO_3)_2$ $6H_2O$.

4.5.13 Lanthanum Oxide, La_2 O_3.

4.5.14 Hg Standard (AAS Grade), 1000 μg/ml.

4.5.15 Pb Standard (AAS Grade), 1000 μg/ml.

4.5.16 As Standard (AAS Grade), 1000 μg/ml.

4.5.17 Cd Standard (AAS Grade), 1000 μg/ml.

4.5.18 Cr Standard (AAS Grade), 1000 μg/ml.

4.5.19 Sb Standard (AAS Grade), 1000 μg/ml.

4.5.20 Ba Standard (AAS Grade), 1000 μg/ml.

4.5.21 Be Standard (AAS Grade), 1000 μg/ml.

4.5.22 Co Standard (AAS Grade), 1000 μg/ml.

4.5.23 Cu Standard (AAS Grade), 1000 μg/ml.

4.5.24 Mn Standard (AAS Grade), 1000 μg/ml.

4.5.25 Ni Standard (AAS Grade), 1000 μg/ml.

4.5.26 P Standard (AAS Grade), 1000 μg/ml.

4.5.27 Se Standard (AAS Grade), 1000 μg/ml.

4.5.28 Ag Standard (AAS Grade), 1000 μg/ml.

4.5.29 Tl Standard (AAS Grade), 1000 μg/ml.

4.5.30 Zn Standard (AAS Grade), 1000 μg/ml.

4.5.31 Al Standard (AAS Grade), 1000 μg/ml.

4.5.32 Fe Standard (AAS Grade), 1000 μg/ml.

4.5.33 Hg Standards and Quality Control Samples. Prepare fresh weekly a 10 μg/ml intermediate Hg standard by adding 5 ml of 1000 μg/ml Hg stock solution prepared according to Method 101A to a 500-ml volumetric flask; dilute with stirring to 500 ml by first carefully adding 20 ml of 15 percent HNO_3 and then adding water to the 500-ml volume. Mix well. Prepare a 200 ng/ml working Hg standard solution fresh daily: add 5 ml of the 10 μg/ml intermediate standard to a 250-ml volumetric flask, and dilute to 250 ml with 5 ml of 4 percent $KMnO_4$, 5 ml of 15 percent HNO_3, and then water. Mix well. Use at least five separate aliquots of the working Hg standard solution and a blank to prepare the standard curve. These aliquots and blank shall contain 0.0, 1.0, 2.0, 3.0, 4.0, and 5.0 ml of the working standard solution containing 0, 200, 400, 600, 800, and 1000 ng Hg, respectively. Prepare quality control samples by making a separate 10 μg/ml standard and diluting until in the calibration range.

4.5.34 ICAP Standards and Quality Control Samples. Calibration standards for ICAP analysis can be combined into four different mixed standard solutions as follows:

MIXED STANDARD SOLUTIONS FOR ICAP ANALYSIS

Solution	Elements
I	As, Be, Cd, Mn, Pb, Se, Zn.
II	Ba, Co, Cu, Fe.
III	Al, Cr, Ni.
IV	Ag, P, Sb, Tl.

Prepare these standards by combining and diluting the appropriate volumes of the 1000 μg/ml solutions with 5 percent HNO_3. A minimum of one standard and a blank can be used to form each calibration curve. However, prepare a separate quality control sample spiked with known amounts of the target metals in quantities in the mid-range of the calibration curve. Suggested standard levels are 25 μg/ml for Al, Cr and Pb, 15 μg/ml for Fe, and 10 μg/ml for the remaining elements. Prepare any standards containing less than 1 μg/ml of metal on a daily basis. Standards containing greater than 1 μg/ml of metal should be stable for a minimum of 1 to 2 weeks. For ICP–MS, follow Method 6020 in EPA Publication SW–846 Third Edition (November 1986) including updates I, II, IIA and IIB, as incorporated by reference in §60.17(i).

4.5.35 GFAAS Standards. Sb, As, Cd, Co, Pb, Se, and Tl. Prepare a 10 μg/ml standard by adding 1 ml of 1000 μg/ml standard to a 100-ml volumetric flask. Dilute with stirring to 100 ml with 10 percent HNO_3. For GFAAS, matrix match the standards. Prepare a 100 ng/ml standard by adding 1 ml of the 10 μg/ml standard to a 100-ml volumetric flask, and dilute to 100 ml with the appropriate matrix solution. Prepare other standards by diluting the 100 ng/ml standards. Use at least five standards to make up the standard curve. Suggested levels are 0, 10, 50, 75, and 100 ng/ml. Prepare quality control samples by making a separate 10 μg/ml standard and diluting until it is in the range of the samples. Prepare any standards containing less than 1 μg/ml of metal on a daily basis. Standards containing greater than 1 μg/ml of metal should be stable for a minimum of 1 to 2 weeks.

4.5.36 Matrix Modifiers.

4.5.36.1 Nickel Nitrate, 1 Percent (V/V). Dissolve 4.956 g of Ni $(NO_3)_2$&διωιδε≧$6H_2O$ or

other nickel compound suitable for preparation of this matrix modifier in approximately 50 ml of water in a 100-ml volumetric flask. Dilute to 100 ml with water.

4.5.36.2 Nickel Nitrate, 0.1 Percent (V/V). Dilute 10 ml of 1 percent nickel nitrate solution to 100 ml with water. Inject an equal amount of sample and this modifier into the graphite furnace during GFAAS analysis for As.

4.5.36.3 Lanthanum. Carefully dissolve 0.5864 g of $La_2 O_3$ in 10 ml of concentrated HNO_3, and dilute the solution by adding it with stirring to approximately 50 ml of water. Dilute to 100 ml with water, and mix well. Inject an equal amount of sample and this modifier into the graphite furnace during GFAAS analysis for Pb.

4.5.37 Whatman 40 and 541 Filter Papers (or equivalent). For filtration of digested samples.

5. Procedure

5.1 Sampling. The complexity of this method is such that, to obtain reliable results, both testers and analysts must be trained and experienced with the test procedures, including source sampling; reagent preparation and handling; sample handling; safety equipment and procedures; analytical calculations; reporting; and the specific procedural descriptions throughout this method.

5.1.1 Pretest Preparation. Follow the same general procedure given in Method 5, Section 4.1.1, except that, unless particulate emissions are to be determined, the filter need not be desiccated or weighed. First, rinse all sampling train glassware with hot tap water and then wash in hot soapy water. Next, rinse glassware three times with tap water, followed by three additional rinses with water. Then soak all glassware in a 10 percent (V/V) nitric acid solution for a minimum of 4 hours, rinse three times with water, rinse a final time with acetone, and allow to air dry. Cover all glassware openings where contamination can occur until the sampling train is assembled for sampling.

5.1.2 Preliminary Determinations. Same as Method 5, Section 4.1.2.

5.1.3 Preparation of Sampling Train.

5.1.3.1 Set up the sampling train as shown in Figure 29–1. Follow the same general procedures given in Method 5, Section 4.1.3, except place 100 ml of the HNO_3/H_2O_2 solution (Section 4.3.1. of this method) in each of the second and third impingers as shown in Figure 29–1. Placee 100 ml of the acidic $KMnO_4$ absorbing solution (Section 4.3.2 of this method) in each of the fifth and sixth impingers as shown in Figure 29–1, and transfer approximately 200 to 300 g of pre-weighed silica gel from its container to the last impinger. Alternatively, the silica gel may be weighed directly in the impinger just prior to final train assembly.

5.1.3.2 Based on the specific source sampling conditions, the use of an empty first impinger can be eliminated if the moisture to be collected in the impingers will be less than approximately 100 ml.

5.1.3.3 If Hg analysis will not be performed, the fourth, fifth, and sixth impingers as shown in Figure 29–1 are not required.

5.1.3.4 To insure leak-free sampling train connections and to prevent possible sample contamination problems, use Teflon tape or other non-contaminating material instead of silicone grease.

Precaution: Exercise extreme care to prevent contamination within the train. Prevent the acidic $KMnO_4$ from contacting any glassware that contains sample material to be analyzed for Mn. Prevent acidic H_2O_2 from mixing with the acidic $KMnO_4$.

5.1.4 Leak-Check Procedures. Follow the leak-check procedures given in Method 5, Section 4.1.4.1 (Pretest Leak-Check), Section 4.1.4.2 (Leak-Checks During the Sample Run), and Section 4.1.4.3 (Post-Test Leak-Checks).

5.1.5 Sampling Train Operation. Follow the procedures given in Method 5, Section 4.1.5. When sampling for Hg, use a procedure analagous to that described in Section 7.1.1 of Method 101A, 40 CFR Part 61, Appendix B, if necessary to maintain the desired color in the last acidified permanganate impinger. For each run, record the data required on a data sheet such as the one shown in Figure 5–2 of Method 5.

5.1.6 Calculation of Percent Isokinetic. Same as Method 5, Section 4.1.6.

5.2 Sample Recovery.

5.2.1 Begin cleanup procedures as soon as the probe is removed from the stack at the end of a sampling period. The probe should be allowed to cool prior to sample recovery. When it can be safely handled, wipe off all external particulate matter near the tip of the probe nozzle and place a rinsed, non-contaminating cap over the probe nozzle to prevent losing or gaining particulate matter. Do not cap the probe tip tightly while the sampling train is cooling; a vacuum can form in the filter holder with the undesired result of drawing liquid from the impingers onto the filter.

5.2.2 Before moving the sampling train to the cleanup site, remove the probe from the sampling train and cap the open outlet. Be careful not to lose any condensate that might be present. Cap the filter inlet where the probe was fastened. Remove the umbilical cord from the last impinger and cap the impinger. Cap the filter holder outlet and impinger inlet. Use non-contaminating caps, whether ground-glass stoppers, plastic caps, serum caps, or Teflon tape to close these openings.

5.2.3 Alternatively, the following procedure may be used to disassemble the train before the probe and filter holder/oven are completely cooled: Initially disconnect the filter holder outlet/impinger inlet and loosely cap the open ends. Then disconnect the probe from the filter holder or cyclone inlet and loosely cap the open ends. Cap the probe tip and remove the umbilical cord as previously described.

5.2.4 Transfer the probe and filter-impinger assembly to a cleanup area that is clean and protected from the wind and other potential causes of contamination or loss of sample. Inspect the train before and during disassembly and note any abnormal conditions. Take special precautions to assure that all the items necessary for recovery do not contaminate the samples. The sample is recovered and treated as follows (see schematic in Figures 29–2a and 29–2b):

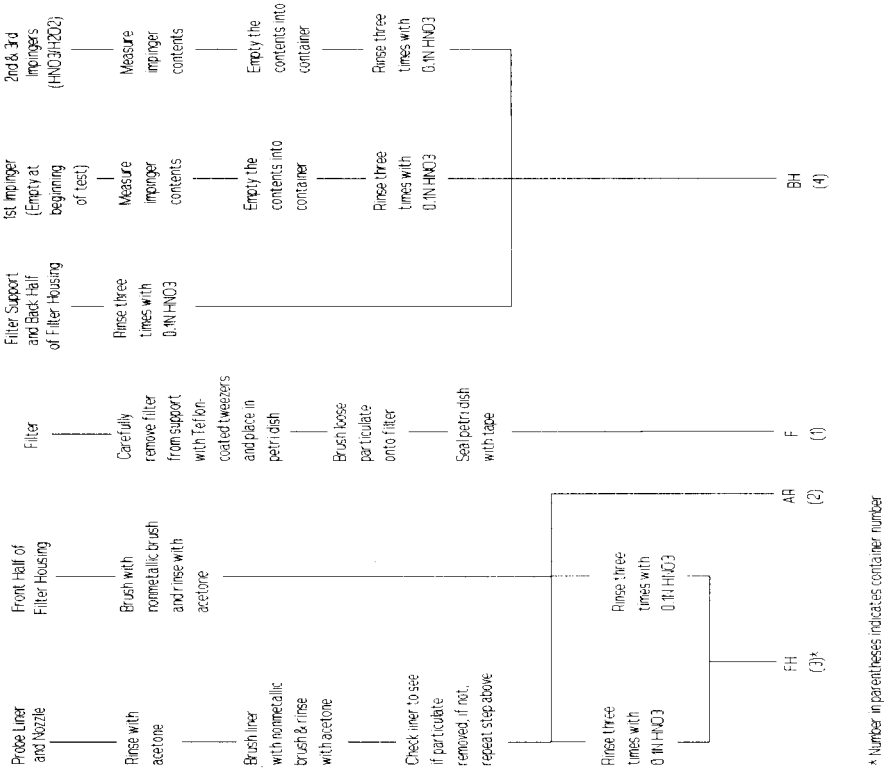

Figure 29-2a. Sample recovery scheme.

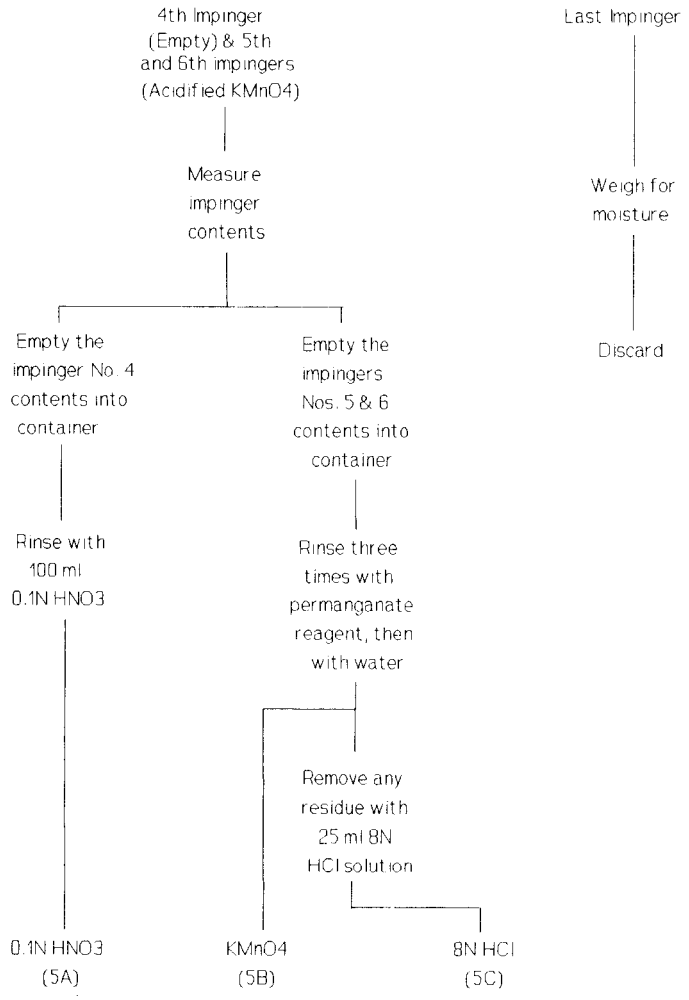

Figure 29-2b. Sample recovery scheme.

5.2.5 Container No. 1 (Sample Filter). Carefully remove the filter from the filter holder and place it in its labeled petri dish container. To handle the filter, use either acid-washed polypropylene or Teflon coated tweezers or clean, disposable surgical gloves rinsed with water and dried. If it is necessary

to fold the filter, make certain the particulate cake is inside the fold. Carefully transfer the filter and any particulate matter or filter fibers that adhere to the filter holder gasket to the petri dish by using a dry (acid-cleaned) nylon bristle brush. Do not use any metal-containing materials when recovering this train. Seal the labeled petri dish.

5.2.6 Container No. 2. (Acetone Rinse). Perform this procedure only if a determination of particulate emissions is to be made. Quantitatively recover particulate matter and any condensate from the probe nozzle, probe fitting, probe liner, and front half of the filter holder by washing these components with a total of 100 ml of acetone, while simultaneously taking great care to see that no dust on the outside of the probe or other surfaces gets in the sample. The use of exactly 100 ml is necessary for the subsequent blank correction procedures. Distilled water may be used instead of acetone when approved by the Administrator and shall be used when specified by the Administrator; in these cases, save a water blank and follow the Administrator's directions on analysis.

5.2.6.1 Carefully remove the probe nozzle, and clean the inside surface by rinsing with acetone from a wash bottle while brushing with a non-metallic brush. Brush until the acetone rinse shows no visible particles, then make a final rinse of the inside surface with acetone.

5.2.6.2 Brush and rinse the sample exposed inside parts of the probe fitting with acetone in a similar way until no visible particles remain. Rinse the probe liner with acetone by tilting and rotating the probe while squirting acetone into its upper end so that all inside surfaces will be wetted with acetone. Allow the acetone to drain from the lower end into the sample container. A funnel may be used to aid in transferring liquid washings to the container. Follow the acetone rinse with a non-metallic probe brush. Hold the probe in an inclined position, squirt acetone into the upper end as the probe brush is being pushed with a twisting action three times through the probe. Hold a sample container underneath the lower end of the probe, and catch any acetone and particulate matter which is brushed through the probe until no visible particulate matter is carried out with the acetone or until none remains in the probe liner on visual inspection. Rinse the brush with acetone, and quantitatively collect these washings in the sample container. After the brushing, make a final acetone rinse of the probe as described above.

5.2.6.3 It is recommended that two people clean the probe to minimize sample losses. Between sampling runs, keep brushes clean and protected from contamination. Clean the inside of the front-half of the filter holder by rubbing the surfaces with a non-metallic brush and rinsing with acetone. Rinse each surface three times or more if needed to remove visible particulate. Make a final rinse of the brush and filter holder. After all acetone washings and particulate matter have been collected in the sample container, tighten the lid so that acetone will not leak out when shipped to the laboratory. Mark the height of the fluid level to determine whether or not leakage occurred during transport. Clearly label the container to identify its contents.

5.2.7 Container No. 3 (Probe Rinse). Keep the probe assembly clean and free from contamination during the probe rinse. Rinse the probe nozzle and fitting, probe liner, and front-half of the filter holder thoroughly with a total of 100 ml of 0.1 N HNO_3, and place the wash into a sample storage container.

(NOTE: The use of a total of exactly 100 ml is necessary for the subsequent blank correction procedures.)

Perform the rinses as applicable and generally as described in Method 12, Section 5.2.2. Record the volume of the rinses. Mark the height of the fluid level on the outside of the storage container and use this mark to determine if leakage occurs during transport. Seal the container, and clearly label the contents. Finally, rinse the nozzle, probe liner, and front-half of the filter holder with water followed by acetone, and discard these rinses.

5.2.8 Container No. 4 (Impingers 1 through 3, Moisture Knockout Impinger, when used, HNO_3/H_2O_2 Impingers Contents and Rinses). Due to the potentially large quantity of liquid involved, the tester may place the impinger solutions from impingers 1 through 3 in more than one container, if necessary. Measure the liquid in the first three impingers to within 0.5 ml using a graduated cylinder. Record the volume. This information is required to calculate the moisture content of the sampled flue gas. Clean each of the first three impingers, the filter support, the back half of the filter housing, and connecting glassware by thoroughly rinsing with 100 ml of 0.1 N HNO_3 using the procedure as applicable in Method 12, Section 5.2.4.

(NOTE: The use of exactly 100 ml of 0.1 N HNO_3 rinse is necessary for the subsequent blank correction procedures. Combine the rinses and impinger solutions, measure and record the final total volume. Mark the height of the fluid level, seal the container, and clearly label the contents.)

5.2.9 Container Nos. 5A (0.1 N HNO_3), 5B ($KMnO_4/H_2SO_4$ absorbing solution), and 5C (8 N HCl rinse and dilution).

5.2.9.1 When sampling for Hg, pour all the liquid from the impinger (normally impinger No. 4) that immediately preceded the two permanganate impingers into a graduated cylinder and measure the volume to within 0.5 ml. This information is required to calculate the moisture content of the sampled

flue gas. Place the liquid in Container No. 5A. Rinse the impinger with exactly 100 ml of 0.1 N HNO_3 and place this rinse in Container No. 5A.

5.2.9.2 Pour all the liquid from the two permanganate impingers into a graduated cylinder and measure the volume to within 0.5 ml. This information is required to calculate the moisture content of the sampled flue gas. Place this acidic $KMnO_4$ solution into Container No. 5B. Using a total of exactly 100 ml of fresh acidified $KMnO_4$ solution for all rinses (approximately 33 ml per rinse), rinse the two permanganate impingers and connecting glassware a minimum of three times. Pour the rinses into Container No. 5B, carefully assuring transfer of all loose precipitated materials from the two impingers. Similarly, using 100 ml total of water, rinse the permanganate impingers and connecting glass a minimum of three times, and pour the rinses into Container 5B, carefully assuring transfer of any loose precipitated material. Mark the height of the fluid level, and clearly label the contents. Read the Precaution: in Section 4.3.2. *NOTE:* Due to the potential reaction of $KMnO_4$ with acid, pressure buildup can occur in the sample storage bottles. Do not fill these bottles completely and take precautions to relieve excess pressure. A No. 70–72 hole drilled in the container cap and Teflon liner has been used successfully.

5.2.9.3 If no visible deposits remain after the water rinse, no further rinse is necessary. However, if deposits remain on the impinger surfaces, wash them with 25 ml of 8 N HCl, and place the wash in a separate sample container labeled No. 5C containing 200 ml of water. First, place 200 ml of water in the container. Then wash the impinger walls and stem with the HCl by turning the impinger on its side and rotating it so that the HC1 contacts all inside surfaces. Use a total of only 25 ml of 8 N HCl for rinsing both permanganate impingers combined. Rinse the first impinger, then pour the actual rinse used for the first impinger into the second impinger for its rinse. Finally, pour the 25 ml of 8 N HCl rinse carefully into the container. Mark the height of the fluid level on the outside of the container to determine if leakage occurs during transport.

5.2.10 Container No. 6 (Silica Gel). Note the color of the indicating silica gel to determine whether it has been completely spent and make a notation of its condition. Transfer the silica gel from its impinger to its original container and seal it. The tester may use a funnel to pour the silica gel and a rubber policeman to remove the silica gel from the impinger. The small amount of particles that might adhere to the impinger wall need not be removed. Do not use water or other liquids to transfer the silica gel since weight gained in the silica gel impinger is used for moisture calculations. Alternatively, if a balance is available in the field, record the weight of the spent silica gel (or silica gel plus impinger) to the nearest 0.5 g.

5.2.11 Container No. 7 (Acetone Blank). If particulate emissions are to be determined, at least once during each field test, place a 100-ml portion of the acetone used in the sample recovery process into a container labeled No. 7. Seal the container.

5.2.12 Container No. 8A (0.1 N HNO_3 Blank). At least once during each field test, place 300 ml of the 0.1 N HNO_3 solution used in the sample recovery process into a container labeled No. 8A. Seal the container.

5.2.13 Container No. 8B (Water Blank). At least once during each field test, place 100 ml of the water used in the sample recovery process into a container labeled No. 8B. Seal the container.

5.2.14 Container No. 9 (5 Percent HNO_3/10 Percent H_2O_2 Blank). At least once during each field test, place 200 ml of the 5 Percent HNO_3/10 Percent H_2O_2 solution used as the nitric acid impinger reagent into a container labeled No. 9. Seal the container.

5.2.15 Container No. 10 (Acidified $KMnO_4$ Blank). At least once during each field test, place 100 ml of the acidified $KMnO_4$ solution used as the impinger solution and in the sample recovery process into a container labeled No. 10. Prepare the container as described in Section 5.2.9.2. Read the *Precaution:* in Section 4.3.2. and read the NOTE in Section 5.2.9.2.

5.2.16 Container No. 11 (8 N HCl Blank). At least once during each field test, place 200 ml of water into a sample container labeled No. 11. Then carefully add with stirring 25 ml of 8 N HCl. Mix well and seal the container.

5.2.17 Container No. 12 (Sample Filter Blank). Once during each field test, place into a petri dish labeled No. 12 three unused blank filters from the same lot as the sampling filters. Seal the petri dish.

5.3 *Sample Preparation.* Note the level of the liquid in each of the containers and determine if any sample was lost during shipment. If a noticeable amount of leakage has occurred, either void the sample or use methods, subject to the approval of the Administrator, to correct the final results. A diagram illustrating sample preparation and analysis procedures for each of the sample train components is shown in Figure 29–3.

5.3.1 *Container No. 1 (Sample Filter).*

5.3.1.1 If particulate emissions are being determined, first desiccate the filter and filter catch without added heat (do not heat the filters to speed the drying) and weigh to a constant weight as described in Section 4.3 of Method 5.

5.3.1.2 Following this procedure, or initially, if particulate emissions are not being determined in addition to metals analysis, divide the filter with its filter catch into portions containing approximately 0.5 g

each. Place the pieces in the analyst's choice of either individual microwave pressure relief vessels or Parr[R] Bombs. Add 6 ml of concentrated HNO_3 and 4 ml of concentrated HF to each vessel. For microwave heating, microwave the samples for approximately 12 to 15 minutes total heating time as follows: heat for 2 to 3 minutes, then turn off the microwave for 2 to 3 minutes, then heat for 2 to 3 minutes, etc., continue this alternation until the 12 to 15 minutes total heating time are completed (this procedure should comprise approximately 24 to 30 minutes at 600 watts). Microwave heating times are approximate and are dependent upon the number of samples being digested simultaneously. Sufficient heating is evidenced by sorbent reflux within the vessel. For conventional heating, heat the Parr[R] Bombs at 140 °C (285 °F) for 6 hours. Then cool the samples to room temperature, and combine with the acid digested probe rinse as required in Section 5.3.3.

5.3.1.3 If the sampling train includes an optional glass cyclone in front of the filter, prepare and digest the cyclone catch by the procedures described in section 5.3.1.2 and then combine the digestate with the digested filter sample.

5.3.2 Container No. 2 (Acetone Rinse). Note the level of liquid in the container and confirm on the analysis sheet whether or not leakage occurred during transport. If a noticeable amount of leakage has occurred, either void the sample or use methods, subject to the approval of the Administrator, to correct the final results. Measure the liquid in this container either volumetrically within 1 ml or gravimetrically within 0.5 g. Transfer the contents to an acid-cleaned, tared 250-ml beaker and evaporate to dryness at ambient temperature and pressure. If particulate emissions are being determined, desiccate for 24 hours without added heat, weigh to a constant weight according to the procedures described in Section 4.3 of Method 5, and report the results to the nearest 0.1 mg. Redissolve the residue with 10 ml of concentrated HNO_3.

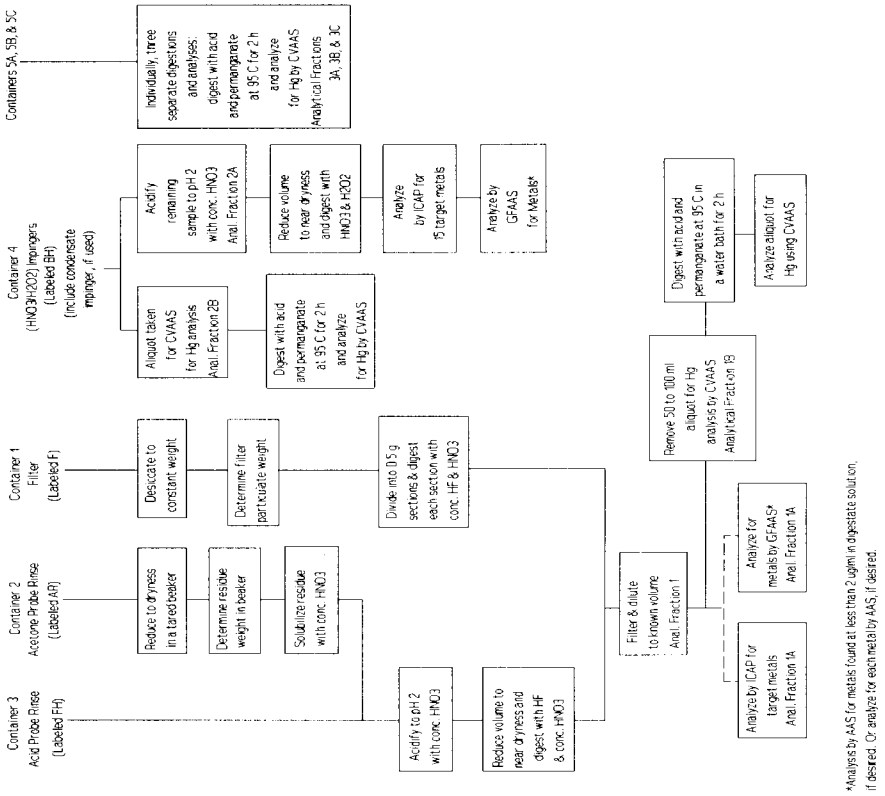

Figure 29-3. Sample preparation and analysis scheme.

Quantitatively combine the resultant sample, including all liquid and any particulate matter, with Container No. 3 before beginning Section 5.3.3.

5.3.3 Container No. 3 (Probe Rinse). Verify that the pH of this sample is 2 or lower. If it is not, acidify the sample by careful addition with stirring of concentrated HNO_3 to pH 2.

Use water to rinse the sample into a beaker, and cover the beaker with a ribbed watch glass. Reduce the sample volume to approximately 20 ml by heating on a hot plate at a temperature just below boiling. Digest the sample in microwave vessels or Parr[R] Bombs by quantitatively transferring the sample to the vessel or bomb, carefully adding the 6 ml of concentrated HNO_3, 4 ml of concentrated HF, and then continuing to follow the procedures described in Section 5.3.1.2. Then combine the resultant sample directly with the acid digested portions of the filter prepared previously in Section 5.3.1.2. The resultant combined sample is referred to as *''Sample Fraction 1''*. Filter the combined sample using Whatman 541 filter paper. Dilute to 300 ml (or the appropriate volume for the expected metals concentration) with water. This diluted sample is *''Analytical Fraction 1''*. Measure and record the volume of Analytical Fraction 1 to within 0.1 ml. Quantitatively remove a 50-ml aliquot and label as *''Analytical Fraction 1B''*. Label the remaining 250-ml portion as *''Analytical Fraction 1A''*. Analytical Fraction 1A is used for ICAP or AAS analysis for all desired metals except Hg. Analytical Fraction 1B is used for the determination of front-half Hg.

5.3.4 Container No. 4 (Impingers 1–3). Measure and record the total volume of this sample to within 0.5 ml and label it *''Sample Fraction 2''*. Remove a 75- to 100-ml aliquot for Hg analysis and label the aliquot *''Analytical Fraction 2B''*. Label the remaining portion of Container No. 4 as *''Sample Fraction 2A''*. Sample Fraction 2A defines the volume of Analytical Fraction 2A *prior* to digestion. All of Sample Fraction 2A is digested to produce *''Analytical Fraction 2A''*. Analytical Fraction 2A defines the volume of Sample Fraction 2A *after* its digestion and the volume of Analytical Fraction 2A is normally 150 ml. Analytical Fraction 2A is analyzed for all metals except Hg. Verify that the pH of Sample Fraction 2A is 2 or lower. If necessary, use concentrated HNO_3 by careful addition and stirring to lower Sample Fraction 2A to pH 2. Use water to rinse Sample Fraction 2A into a beaker and then cover the beaker with a ribbed watch glass. Reduce Sample Fraction 2A to approximately 20 ml by heating on a hot plate at a temperature just below boiling. Then follow either of the digestion procedures described in Sections 5.3.4.1 or 5.3.4.2.

5.3.4.1 Conventional Digestion Procedure. Add 30 ml of 50 percent HNO_3, and heat for 30 minutes on a hot plate to just below boiling. Add 10 ml of 3 percent H_2O_2 and heat for 10 more minutes. Add 50 ml of hot water, and heat the sample for an additional 20 minutes. Cool, filter the sample, and dilute to 150 ml (or the appropriate volume for the expected metals concentrations) with water. This dilution produces Analytical Fraction 2A. Measure and record the volume to within 0.1 ml.

5.3.4.2 Microwave Digestion Procedure. Add 10 ml of 50 percent HNO_3 and heat for 6 minutes total *heating* time in alternations of 1 to 2 minutes at 600 Watts followed by 1 to 2 minutes with no power, etc., similar to the procedure described in Section 5.3.1. Allow the sample to cool. Add 10 ml of 3 percent H_2O_2 and heat for 2 more minutes. Add 50 ml of hot water, and heat for an additional 5 minutes. Cool, filter the sample, and dilute to 150 ml (or the appropriate volume for the expected metals concentrations) with water. This dilution produces Analytical Fraction 2A. Measure and record the volume to within 0.1 ml.

(NOTE: All microwave heating times given are approximate and are dependent upon the number of samples being digested at a time. Heating times as given above have been found acceptable for simultaneous digestion of up to 12 individual samples. Sufficient heating is evidenced by solvent reflux within the vessel.)

5.3.5 Container No. 5A (Impinger 4), Container Nos. 5B and 5C (Impingers 5 and 6). Keep the samples in Containers Nos. 5A, 5B, and 5C separate from each other. Measure and record the volume of 5A to within 0.5 ml. Label the contents of Container No. 5A to be Analytical Fraction 3A. To remove any brown MnO_2 precipitate from the contents of Container No. 5B, filter its contents through Whatman 40 filter paper into a 500 ml volumetric flask and dilute to volume with water. Save the filter for digestion of the brown MnO_2 precipitate. Label the 500 ml filtrate from Container No. 5B to be Analytical Fraction 3B. Analyze Analytical Fraction 3B for Hg within 48 hours of the filtration step. Place the saved filter, which was used to remove the brown MnO_2 precipitate, into an appropriately sized *vented* container, which will allow release of any gases including chlorine formed when the filter is digested. In a laboratory hood which will remove any gas produced by the digestion of the MnO_2, add 25 ml of 8 N HCl to the filter and allow to digest for a minimum of 24 hours at room temperature. Filter the contents of Container No. 5C through a Whatman 40 filter into a 500-ml volumetric flask. Then filter the result of the digestion of the brown MnO_2 from Container No. 5B through a Whatman 40 filter into the same 500-ml volumetric flask, and dilute and mix well to volume with water. Discard the Whatman 40 filter. Mark this combined 500-ml dilute HCl solution as Analytical Fraction 3C.

5.3.6 Container No. 6 (Silica Gel). Weigh the spent silica gel (or silica gel plus impinger) to the nearest 0.5 g using a balance.

5.4 Sample Analysis. For each sampling train sample run, seven individual analytical samples are generated; two for all desired

metals except Hg, and five for Hg. A schematic identifying each sample container and the prescribed analytical preparation and analysis scheme is shown in Figure 29–3. The first two analytical samples, labeled Analytical Fractions 1A and 1B, consist of the digested samples from the front-half of the train. Analytical Fraction 1A is for ICAP, ICP–MS or AAS analysis as described in Sections 5.4.1 and 5.4.2, respectively. Analytical Fraction 1B is for front-half Hg analysis as described in Section 5.4.3. The contents of the back-half of the train are used to prepare the third through seventh analytical samples. The third and fourth analytical samples, labeled Analytical Fractions 2A and 2B, contain the samples from the moisture removal impinger No. 1, if used, and HNO_3 H_2O_2 impingers Nos. 2 and 3. Analytical Fraction 2A is for ICAP, ICP–MS or AAS analysis for target metals, except Hg. Analytical Fraction 2B is for analysis for Hg. The fifth through seventh analytical samples, labeled Analytical Fractions 3A, 3B, and 3C, consist of the impinger contents and rinses from the empty impinger No. 4 and the $H_2SO_4/KMnO_4$ Impingers Nos. 5 and 6. These analytical samples are for analysis for Hg as described in Section 5.4.3. The total back-half Hg catch is determined from the sum of Analytical Fractions 2B, 3A, 3B, and 3C. Analytical Fractions 1A and 2A can be combined proportionally prior to analysis.

5.4.1 ICAP and ICP–MS Analysis. Analyze Analytical Fractions 1A and 2A by ICAP using Method 6010 or Method 200.7 (40 CFR part 136, appendix C). Calibrate the ICAP, and set up an analysis program as described in Method 6010 or Method 200.7. Follow the quality control procedures described in Section 7.3.1. Recommended wavelengths for analysis are as follows:

Element	Wavelength (nm)
Aluminum	308.215
Antimony	206.833
Arsenic	193.696
Barium	455.403
Beryllium	313.042
Cadmium	226.502
Chromium	267.716
Cobalt	228.616
Copper	324.754
Iron	259.940
Lead	220.353
Manganese	257.610
Nickel	231.604
Phosphorous	214.914
Selenium	196.026
Silver	328.068
Thallium	190.864
Zinc	213.856

These wavelengths represent the best combination of specificity and potential detection limit. Other wavelengths may be substituted if they can provide the needed specificity and detection limit, and are treated with the same corrective techniques for spectral interference. Initially, analyze all samples for the target metals (except Hg) plus Fe and Al. If Fe and Al are present, the sample might have to be diluted so that each of these elements is at a concentration of less than 50 ppm so as to reduce their spectral interferences on As, Cd, Cr, and Pb. Perform ICP–MS analysis by following Method 6020 in EPA Publication SW–846 Third Edition (November 1986) including updates I, II, IIA, and IIB, as incorporated by reference in §60.17(i).

(NOTE: When analyzing samples in a HF matrix, an alumina torch should be used; since all front-half samples will contain HF, use an alumina torch.)

5.4.2. AAS by Direct Aspiration and/or GFAAS. If analysis of metals in Analytical Fractions 1A and 2A by using GFAAS or direct aspiration AAS is needed, use Table 29–2 to determine which techniques and procedures to apply for each target metal. Use Table 29–2, if necessary, to determine techniques for minimization of interferences. Calibrate the instrument according to Section 6.3 and follow the quality control procedures specified in Section 7.3.2.

TABLE 29–2.—APPLICABLE TECHNIQUES, METHODS AND MINIMIZATION OF INTERFERENCE FOR AAS ANALYSIS

Metal	Technique	SW–846[1] method No.	Wavelength (nm)	Interferences	
				Cause	Minimization
Fe	Aspiration	7380	248.3	Contamination	Great care taken to avoid contamination.
Pb	Aspiration	7420	283.3	217.0 nm alternate	Background correction required.
Pb	Furnace	7421	283.3	Poor recoveries	Matrix modifier, add 10 ul of phosphorus acid to 1 ml of prepared sample in sampler cup.
Mn	Aspiration	7460	279.5	403.1 nm alternate	Background correction required.

TABLE 29–2.—APPLICABLE TECHNIQUES, METHODS AND MINIMIZATION OF INTERFERENCE FOR AAS ANALYSIS—Continued

Metal	Technique	SW–846[1] method No.	Wavelength (nm)	Interferences	
				Cause	Minimization
Ni	Aspiration	7520	232.0	352.4 nm alternate Fe, Co, and Cr.	Background correction required. Matrix matching or nitrous-oxide/acetylene flame.
				Nonlinear response	sample dilution or use 352.3 nm line.
Se	Furnace	7740	196.0	Volatility	Spike samples and reference materials and add nickel nitrate to minimize volatilization.
				Adsorption & scatter	Background correction is required and Zeeman background correction can be useful.
Ag	Aspiration	7760	328.1	Adsorption & Scatter AgCl insoluble.	Background correction is required. Avoid Hydrochloric acid unless silver is in solution as a chloride complex Sample and standards monitored for aspiration rate.
Tl	Aspiration	7840	276.8		Background correction is required. Hydrochloric acid should not be used.
Tl	Furnace	7841	276.8	Hydrochloric acid or chloride.	Background correction is required. Verify that losses are not occurring for volatization by spiked samples or standard addition; Palladium is a suitable matrix modifier.
Zn	Aspiration	7950	213.9	High Si, Cu, & P Contamination.	Strontium removes Cu and phosphate, Great care taken to avoid contamination.
Sb	Aspiration	7040	217.6	1000 mg/ml Pb Ni, Cu, or acid.	Use secondary wavelengths of 231.1.nm; match sample & standards acid concentration or use nitrous oxidefacetylene flame.
Sb	Furnace	7041	217.6	High Pb	Secondary Wavelength or Zeeman correction.
As	Furnace	7060	193.7	Arsenic volatilization	Spiked samples and add nickel nitrate solution to digestates prior to analysis.
				Aluminum	Use Zeeman background correction.
Ba	Aspiration 7080	7080	553.6	Calcium	High hollow cathode current and narrow band set.
				Barium ionization	2 ml of KCl per 100 ml of sample.
Be	Aspiration	7090	234.9	500 ppm Al High Mg and Si.	Add 0.1% fluoride. Use method of standard additions.
Be	Furnace	7091	234.9	Be in optical path	Optimize parameters to minimize effects.
Cd	Aspiration	7130	228.8	Absorption and light scattering.	Background correction is required.
Cd	Furnace	7131	228.8	As above	As above.
				Excess Chloride	Ammonium phosphate used as a matrix modifier.
				Pipet tips	Use cadmiun-free tips.

TABLE 29–2.—APPLICABLE TECHNIQUES, METHODS AND MINIMIZATION OF INTERFERENCE FOR AAS ANALYSIS—Continued

Metal	Technique	SW–846[1] method No.	Wavelength (nm)	Interferences	
				Cause	Minimization
Cr	Aspiration	7190	357.9	Akali metal	KCl ionization suppressant in samples and standards—Consult mfgs literature.
Co	Furnace	7201	240.7	Excess chloride	Use Method of Standard Additions.
Cr	Furnace	7191	357.9	200 mg/L Ca and P	All calcium nitrate for a known constant effect and to eliminate effect of phosphate.
Cu	Aspiration	7210	324.7	Absorption & scatter	Consult manufacturer's manual.

[1] Refer to EPA publication SW–846 Third Edition (November 1986) including updates I, II, IIA, and IIB, as incorporated by reference in §60.17(i).

5.4.3 CVAAS Hg analysis. Analyze Analytical Fractions 1B, 2B, 3A, 3B, and 3C separately for Hg using CVAAS following the method outlined in Method 7470 in EPA Publication SW–846 Third Edition (November 1986) including updates I, II, IIA and IIB, as incorporated by reference in §60.17(i) or in *Standard Methods for the Examination of Water and Wastewater,* 16th Edition, (1985), Method 303F, as incorporated by reference in §60.17, or, optionally using *NOTE No. 2* in this section. Set up the calibration curve (zero to 1000 ng) as described in Method 7470 or similar to Method 303F using 300-ml BOD bottles instead of Erlenmeyers. Perform the following for each Hg analysis. From each original sample, select and record an aliquot in the size range from 1 ml to 10 ml. If no prior knowledge of the expected amount of Hg in the sample exists, a 5 ml aliquot is suggested for the first dilution to 100 ml (see *NOTE No. 1* in this Section). The total amount of Hg in the aliquot shall be less than 1 μg and within the range (zero to 1000 ng) of the calibration curve. Place the sample aliquot into a separate 300-ml BOD bottle, and add enough water to make a total volume of 100 ml. Next add to it sequentially the sample digestion solutions and perform the sample preparation described in the procedures of Method 7470 or Method 303F. (See *NOTE No. 2* in this Section). If the maximum readings are off-scale (because Hg in the aliquot exceeded the calibration range; including the situation where only a 1-ml aliquot of the original sample was digested), then dilute the original sample (or a portion of it) with 0.15 percent HNO_3 (1.5 ml concentrated HNO_3 per liter aqueous solution) so that when a 1- to 10-ml aliquot of the ''0.15 HNO_3 percent dilution of the original sample'' is digested and analyzed by the procedures described above, it will yield an analysis within the range of the calibration curve.

NOTE NO. 1 TO SECTION 5.4.3. When Hg levels in the sample fractions are below the in-stack detection limit given in Table 29–1, select a 10 ml aliquot for digestion and analysis as described.

NOTE NO. 2 TO SECTION 5.4.3. Optionally, Hg can be analyzed by using the CVAAS analytical procedures given by some instrument manufacturer's directions. These include calibration and quality control procedures for the Leeman Model PS200, the Perkin Elmer FIAS systems, and similar models, if available, of other instrument manufacturers. For digestion and analyses by these instruments, perform the following two steps:

(1) Digest the sample aliquot through the addition of the aqueous hydroxylamine hydrochloride/sodium chloride solution the same as described in this Section 5.4.3.: (*The Leeman, Perkin Elmer, and similar instruments described in this note add automatically the necessary stannous chloride solution during the automated analysis of Hg.)* and

(2) Upon completion of the digestion described in paragraph (1), of this note, analyze the sample according to the instrument manufacturer's directions. This approach allows multiple (including duplicate) automated analyses of a digested sample aliquot.

6. Calibration

Maintain a laboratory log of all calibrations.

6.1 Sampling Train Calibration. Calibrate the sampling train components according to the indicated sections of Method 5: Probe Nozzle (Section 5.1); Pitot Tube (Section 5.2); Metering System (Section 5.3); Probe Heater (Section 5.4); Temperature Gauges (Section 5.5); Leake-Check of the Metering System (Section 5.6); and Barometer (Section 5.7).

6.2 Industively Coupled Argon Plasma Spectrometer Calibration. Prepare standards

as outlined in Section 4.5. Profile and calibrate the instrument according to the manufacturer's recommended procedures using those standards. Check the calibration once per hour. If the instrument does not reproduce the standard concentrations within 10 percent, perform the complete calibration procedures. Perform ICP–MS analysis by following Method 6020 in EPA Publication SW–846 Third Edition (November 1986) including updates I, II, IIA and IIB, as incorporated by reference in §60.17(i).

6.3 Atomic Absorption Spectrometer—Direct Aspiration AAS, GFAAS, and CVAAS analyses. Prepare the standards as outlined in Section 4.5 and use them to calibrate the spectrometer. Calibration procedures are also outlined in the EPA methods referred to in Table 29–2 and in Method 7470 in EPA Publication SW–846 Third Edition (November 1986) including updates I, II, IIA and IIB, as incorporated by reference in §60.17(i) or in *Standard Methods for the Examination of Water and Wastewater*, 16th Edition, (1985), Method 303F (for Hg) as incorporated by reference in §60.17. Run each standard curve in duplicate and use the mean values to calculate the calibration line. Recalibrate the instrument approximately once every 10 to 12 samples.

7. Quality Control

7.1 Field Reagent Blanks, if analyzed. Perform the digestion and analysis of the blanks in Container Nos. 7 through 12 that were produced in Sections 5.2.11 through 5.2.17, respectively. For Hg field reagent blanks, use a 10 ml aliquot for digestion and analysis.

7.1.1 Digest and analyze one of the filters from Container No. 12 per Section 5.3.1, 100 ml from Container No. 7 per Section 5.3.2, and 100 ml from Container No. 8A per Section 5.3.3. This step produces blanks for Analytical Fractions 1A and 1B.

7.1.2 Combine 100 ml of Container No. 8A with 200 ml from Container No. 9, and digest and analyze the resultant volume per Section 5.3.4. This step produces blanks for Analytical Fractions 2A and 2B.

7.1.3 Digest and analyze a 100-ml portion of Container No. 8A to produce a blank for Analytical Fraction 3A.

7.1.4 Combine 100 ml from Container No. 10 with 33 ml from Container No. 8B to produce a blank for Analytical Fraction 3B. Filter the resultant 133 ml as described for Container No. 5B in Section 5.3.5, except do not dilute the 133ml. Analyze this blank for Hg within 48 hrs. of the filtration step, and use 400 ml as the blank volume when calculating the blank mass value. Use the actual volumes of the other analytical blanks when calculating their mass values.

7.1.5 Digest the filter that was used to remove any brown MnO_2 precipitate from the blank for Analytical Fraction 3B by the same procedure as described in Section 5.3.5 for the similar sample filter. Filter the digestate and the contents of Container No. 11 through Whatman 40 paper into a 500-ml volumetric flask, and dilute to volume with water. These steps produce a blank for Analytical Fraction 3C.

7.1.6 Analyze the blanks for Analytical Fraction Blanks 1A and 2A per Section 5.4.1 and/or Section 5.4.2. Analyze the blanks for Analytical Fractions 1B, 2B, 3A, 3B, and 3C per Section 5.4.3. Analysis of the blank for Analytical Fraction 1A produces the front-half reagent blank correction values for the desired metals except for Hg; Analysis of the blank for Analytical Fraction 1B produces the front-half reagent blank correction value for Hg. Analysis of the blank for Analytical Fraction 2A produces the back-half reagent blank correction values for all of the desired metals except for Hg, while separate analyses of the blanks for Analytical Fractions 2B, 3A, 3B, and 3C produce the back-half reagent blank correction value for Hg.

7.2 Quality Control Samples. Analyze the following quality control samples.

7.2.1 ICAP and ICP–MS Analysis. Follow the respective quality control descriptions in Section 8 of Methods 6010 and 6020 of EPA Publication SW–846 Third Edition (November 1986) including updates I, II, IIA and IIB, as incorporated by reference in §60.17(i). For the purposes of a source test that consists of three sample runs, modify those requirements to include the following: two instrument check standard runs, two calibration blank runs, one interference check sample at the beginning of the analysis (analyze by Method of Standard Additions unless within 25 percent), one quality control sample to check the accuracy of the calibration standards (required to be within 25 percent of calibration), and one duplicate analysis (required to be within 20 percent of average or repeat all analyses).

7.2.2. Direct Aspiration AAS and/or GFAAS Analysis for Sb, As, Ba, Be, Cd, Cu, Cr, Co, Pb, Ni, Mn, Hg, P, Se, Ag, Tl, and Zn. Analyze all samples in duplicate. Perform a matrix spike on at least one front-half sample and one back-half sample, or one combined sample. If recoveries of less than 75 percent or greater than 125 percent are obtained for the matrix spike, analyze each sample by the Method of Standard Additions. Analyze a quality control sample to check the accuracy of the calibration standards. If the results are not within 20 percent, repeat the calibration.

7.2.3 CVAAS Analysis for Hg. Analyze all samples in duplicate. Analyze a quality control sample to check the accuracy of the calibration standards (if not within 15 percent, repeat calibration). Perform a matrix spike on one sample (if not within 25 percent, analyze all samples by the Method of Standard Additions). Additional information on quality control can be obtained from Method

7470 of EPA Publication SW–846 Third Edition (November 1986) including updates I, II, IIA and IIB, as incorporated by reference in §60.17(i) or in *Standard Methods for the Examination of Water and Wastewater*, 16th Edition, (1985), Method 303F as incorporated by reference in §60.17.

8. Calculations

8.1 Dry Gas Volume. Using the data from this test, calculate $V_{m(std)}$, the dry gas sample volume at standard conditions as outlined in Section 6.3 of Method 5.

8.2 Volume of Water Vapor and Moisture Content. Using the total volume of condensate collected during the source sampling, calculate the volume of water vapor $V_{w(std)}$ and the moisture content B_{ws} of the stack gas. Use Equations 5–2 and 5–3 of Method 5.

8.3 Stack Gas Velocity. Using the data from this test and Equation 2–9 of Method 2, calculate the average stack gas velocity.

8.4 Metals (Except Hg) in Source Sample.

8.4.1 Analytical Fraction 1A, Front-Half, Metals (except Hg). Calculate separately the amount of each metal collected in Sample Fraction 1 of the sampling train using the following equation:

$M_{fh}=C_{a1}\ F_d\ V_{soln,1}$ Eq. 29–1

where:

M_{fh}=Total mass of each metal (except Hg) collected in the front half of the sampling train (Sample Fraction 1), µg.

C_{a1}=Concentration of metal in Analytical Fraction 1A as read from the standard curve, µg/ml.

F_d=Dilution factor (F_d = the inverse of the fractional portion of the concentrated sample in the solution actually used in the instrument to produce the reading C_{a1}. For example, if a 2 ml aliquot of Analytical Fraction 1A is diluted to 10 ml to place it in the calibration range, F_d = 5).

$V_{soln,1}$=Total volume of digested sample solution (Analytical Fraction 1), ml.

8.4.1.1 If Analytical Fractions 1A and 2A are combined, use proportional aliquots. Then make appropriate changes in Equations 29–1 through 29–3 to reflect this approach.

8.4.2 Analytical Fraction 2A, Back-Half, Metals (except Hg). Calculate separately the amount of each metal collected in Fraction 2 of the sampling train using the following equation.

$M_{bh}=C_{a2}\ F_a\ V_a$ Eq. 29–2

where:

M_{bh}=Total mass of each metal (except Hg) collected in the back-half of the sampling train (Sample Fraction 2), µg.

C_{a2}=Concentration of metal in Analytical Fraction 2A as read from the standard curve, (µg/ml).

F_a=Aliquot factor, volume of Sample Fraction 2 divided by volume of Sample Fraction 2A (*see Section 5.3.4.*)

V_a=Total volume of digested sample solution (Analytical Fraction 2A), ml (see Section 5.3.4.1 or 5.3.4.2, as applicable).

8.4.3 Total Train, Metals (except Hg). Calculate the total amount of each of the quantified metals collected in the sampling train as follows:

$M_t=(M_{fh}-M_{fhb})+(M_{bh}-M_{bhb})$ Eq. 29–3

where:

M_t=Total mass of each metal (separately stated for each metal) collected in the sampling train, µg.

M_{fhb}=Blank correction value for mass of metal detected in front-half field reagent blank, µg.

M_{bhb}=Blank correction value for mass of metal detected in back-half field reagent blank, µg.

8.4.3.1 If the measured blank value for the front half (M_{fhb}) is in the range 0.0 to ''A'' µg [where ''A'' µg equals the value determined by multiplying 1.4 µg/in.^{2} times the actual area in in.^{2} of the sample filter], use M_{fhb} to correct the emission sample value (M_{fh}); if M_{fhb} exceeds ''A'' µg, use the greater of I or II:

I. ''A'' µg.

II. the lesser of (a) M_{fhb}, or (b) 5 percent of M_{fh}.

If the measured blank value for the black-half (M_{bhb}) is in the range 0.0 to 1 µg, use M_{bhb} to correct the emission sample value (M_{bh}); if M_{bhb}) exceeds 1 µg, use the greater of I or II:

I. 1 µg.

II. the lesser of (a) M_{bhb} or (b) 5 percent of M_{bh}.

8.5 Hg in Source Sample.

8.5.1 Analytical Fraction 1B; Front-Half Hg. Calculate the amount of Hg collected in the front-half, Sample Fraction 1, of the sampling train by using Equation 29–4:

$$Hg_{fh}=\frac{Q_{fh}}{V_{f1B}}\left(V_{soln,1}\right) \qquad \text{Eq. } 29-4$$

where:

Hg_{fh}=Total mass of Hg collected in the front-half of the sampling train (Sample Fraction 1), µg.

Q_{fh}=Quantity of Hg, µg, *TOTAL in the ALIQUOT of Analytical Fraction 1B selected for digestion and analysis.*

8.5.1.1 For example, if a 10 ml aliquot of Analytical Fraction 1B is taken and digested and analyzed (according to Section 5.4.3 and its NOTES Nos. 1 and 2), then calculate and use the total amount of Hg in the 10 ml aliquot for Q_{fh}.

$V_{soln,1}$=Total volume of Analytical Fraction 1, ml.

V_{f1B}=Volume of aliquot of Analytical Fraction 1B analyzed, ml.

8.5.1.2 For example, if a 1 ml aliquot of Analytical Fraction 1B was diluted to 50 ml

with 0.15 percent HNO_3 as described in Section 5.4.3 to bring it into the proper analytical range, and then 1 ml of that 50-ml wa digested according to Section 5.4.3 and analyzed, V_{f1B} would be 0.02 ml.

8.5.2 Analytical Fractions 2B, 3A, 3B, and 3C; Back Half Hg.

8.5.2.1 Calculate the amount of Hg collected in Sample Fraction 2 by using Equation 29–5:

$$Hg_{bh2} = \frac{Q_{bh2}}{V_{f2B}}\left(V_{soln,2}\right) \qquad \text{Eq. } 29-5$$

where:

Hg_{bh2}=Total mass of Hg collected in Sample Fraction 2, µg.

Q_{bh2}=Quantity of Hg, µg, *TOTAL in the ALIQUOT of Analytical Fraction 2B selected for digestion and analysis.*

8.5.2.1.1 For example, if a 10 ml aliquot of Analytical Fraction 2B is taken and digested and analyzed (according to Section 5.4.3 and its NOTES Nos. 1 and 2), then calculate and use the total amount of Hg in the 10 ml aliquot for Q_{bh2}.

$V_{soln,2}$=Total volume of Sample Fraction 2, ml.

V_{f2B}=Volume of Analytical Fraction 2B analyzed, ml.

8.5.2.1.2 For example, if 1 ml of Analytical Fraction 2B was diluted to 10 ml with 0.15 percent HNO_3 as described in Section 5.4.3 to bring it into the proper analytical range, and then 5 ml of that 10-ml was analyzed, V_{f2B} would be 0.5 ml.

8.5.2.2 Calculate each of the back-half Hg values for Analytical Fractions 3A, 3B, and 3C by using Equation 29–6:

$$Hg_{bh3(A,B,C)} = \frac{Q_{bh3(A,B,C)}}{V_{f3(A,B,C)}}\left(V_{soln,3(A,B,C)}\right) \qquad \text{Eq. } 29-6$$

where:

$Hg_{bh3(A,B,C)}$=Total mass of Hg collected separately in Fraction 3A, 3B, or 3C, µg.

$Q_{bh3(A,B,C)}$=Quantity of Hg, µg, *TOTAL, separately, in the ALIQUOT of Analytical Fraction 3A, 3B, and 3C selected for digestion and analysis,* (see previous notes in Sections 8.5.1 and 8.5.2 describing the quantity ''Q'' and calculate similarly).

$V_{f3(A,B,C)}$=Volume, separately, of Analytical Fraction 3A, 3B, or 3C analyzed, ml (see previous notes in Sections 8.5.1 and 8.5.2, describing the quantity ''V'' and calculate similarly).

$V_{soln,3(A,B,C)}$=Total volume, separately, of Analytical Fraction 3A, 3B, or 3C, ml.

8.5.2.3 Calculate the total amount of Hg collected in the back-half of the sampling train by using Equation 29–7:

$$Hg_{bh}=Hg_{bh2}+Hg_{bh3A}+Hg_{bh3B}+Hg_{bh3C} \qquad \text{Eq. } 29-7$$

where:

Hg_{bh}=Total mass of Hg collected in the back-half of the sampling train, µg.

8.5.3 Total Train Hg Catch. Calculate the total amount of Hg collected in the sampling train by using Equation 29–8:

$$Hg_t=(Hg_{fh}-Hg_{fhb})+(Hg_{bh}-Hg_{bhb}) \qquad \text{Eq. } 29-8$$

where:

Hg_t=Total mass of Hg collected in the sampling train, µg.

Hg_{fhb}=Blank correction value for mass of Hg detected in front-half field reagent blank, µg.

Hg_{bhb}=Blank correction value for mass of Hg detected in back-half field reagent blanks, µg.

8.5.4 If the total of the measured blank values ($Hg_{fhb}+Hg_{bhb}$) is in the range of 0.0 to 0.6 µg, then use the total to correct the sample value ($Hg_{fh}+Hg_{bh}$); if it exceeds 0.6 µg, use the greater of I. or II:

I. 0.6 µg.

II. the lesser of (a) ($Hg_{fhb}+Hg_{bhb}$), or (b) 5 percent of the sample value ($Hg_{fh}+Hg_{bh}$).

8.6 Individual Metal Concentrations in Stack Gas. Calculate the concentration of each metal in the stack gas (dry basis, adjusted to standard conditions) by using Equation 29–9:

$$C_s = \frac{K_4 M_t}{V_{m(std)}} \qquad \text{Eq. } 29-9$$

C_s=Concentration of a metal in the stack gas, mg/dscm.

$K_4=10^{-3}$ mg/µg.

M_t=Total mass of that metal collected in the sampling train, µg; (substitute Hg_t for M_t for the Hg calculation).

$V_{m(std)}$=Volume of gas sample as measured by the dry gas meter, corrected to dry standard conditions, dscm.

8.7 Isokinetic Variation and Acceptable Results. Same as Method 5, Sections 6.11 and 6.12, respectively.

9. Bibliography

1. Method 303F in *Standard Methods for the Examination of Water Wastewater*, 16th Edition, 1985. Available from the American Public Health Association, 1015 18th Street NW., Washington, DC 20036.

2. EPA Methods 6010, 6020, 7000, 7041, 7060, 7131, 7421, 7470, 7740, and 7841, *Test Methods for Evaluating Solid Waste: Physical/Chemical Methods.* SW–846, Third Edition, September 1986, with updates I, II, IIA and IIB. Office of Solid Waste and Emergency Response, U.S. Environmental Protection Agency, Washington, DC 20460.

3. EPA Method 200.7, *Code of Federal Regulations*, Title 40, Part 136, Appendix C. July 1, 1987.

4. EPA Methods 1 through 5, *Code of Federal Regulations*, Title 40, Part 60, Appendix A. July 1, 1991.

5. EPA Method 101A, *Code of Federal Regulations*, Title 40, Part 61, Appendix B. July 1, 1991.

[36 FR 24877, Dec. 23, 1971]

EDITORIAL NOTE: For FEDERAL REGISTER citations affecting part 60, appendix A see the List of CFR Sections in the Finding Aids section of this volume.

EFFECTIVE DATE NOTE: At 64 FR 26490, May 14, 1999, Appendix A to part 60 was amended by adding Methods 2F, 2G, and 2H and corrected at 64 FR 37196, July 9, 1999, and 64 FR 38241, July 15, 1999, effective July 13, 1999.

APPENDIX B TO PART 60—PERFORMANCE SPECIFICATIONS

Performance Specification 1—Specifications and test procedures for opacity continuous emission monitoring systems in stationary sources
Performance Specification 2—Specifications and test procedures for SO_2 and NO_x continuous emission monitoring systems in stationary sources
Performance Specification 3—Specifications and test procedures for O_2 and CO_2 continuous emission monitoring systems in stationary sources
Performance Specification 4—Specifications and test procedures for carbon monoxide continuous emission monitoring systems in stationary sources
Performance Specification 4A—Specifications and test procedures for carbon monoxide continuous emission monitoring systems in stationary sources
Performance Specification 5—Specifications and test procedures for TRS continuous emission monitoring systems in stationary sources
Performance Specification 6—Specifications and test procedures for continuous emission rate monitoring systems in stationary sources
Performance Specification 7—Specifications and test procedures for hydrogen sulfide continuous emission monitoring systems in stationary sources
Performance Specification 8—Performance Specifications for Volatile Organic Compound Continuous Emission Monitoring Systems in Stationary Sources
Performance Specification 9—Specifications and Test Procedures for Gas Chromatographic Countiuous Emission Monitoring Systems in Stationary Sources

PERFORMANCE SPECIFICATION 1—SPECIFICATIONS AND TEST PROCEDURES FOR OPACITY CONTINUOUS EMISSION MONITORING SYSTEMS IN STATIONARY SOURCES

1. *Applicability and Principle*

1.1 Applicability. This specification contains requirements for the design, performance, and installation of instruments for opacity continuous emission monitoring systems (CEMS's) and data computation procedures for evaluating the acceptability of a CEMS. Certain design requirements and test procedures established in this specification may not apply to all instrument designs. In such instances, equivalent design requirements and test procedures may be used with prior approval of the Administrator.

Performance Specification 1 (PS 1) applies to opacity monitors installed after March 30, 1983. Opacity monitors installed before March 30, 1983, are required to comply with the provisions and requirements of PS 1 except for the following:

(a) Section 4. ''Installation Specifications.''

(b) Sections 5.1.4, 5.1.6, 5.1.7, and 5.1.8 of Section 5, ''Design and Performance Specifications.''

(c) Section 6.4 of Section 6 ''Design Specifications Verification Procedure.''

An opacity monitor installed before March 30, 1983, need not be tested to demonstrate compliance with PS 1 unless required by regulatory action other than the promulgation of PS 1. If an existing monitor is replaced with a new monitor, PS 1 shall apply except that the new monitor may be located at the old measurement location regardless of whether the location meets the requirements of Section 4. If a new measurement location is to be determined, the new location shall meet the requirements of Section 4.

1.2 Principle. The opacity of particulate matter in stack emissions is continuously monitored by a measurement system based upon the principle of transmissometry. Light having specific spectral characteristics is projected from a lamp through the effluent in the stack or duct, and the intensity of the projected light is measured by a sensor. The projected light is attenuated because of absorption and scattered by the particulate

matter in the effluent; the percentage of visible light attenuated is defined as the opacity of the emission. Transparent stack emissions that do not attenuate light will have a transmittance of 100 percent or an opacity of zero percent. Opaque stack emissions that attenuate all of the visible light will have a transmittance of zero percent or an opacity of 100 percent.

This specification establishes specific design criteria for the transmissometer system. Any opacity CEMS that is expected to meet this specification is first checked to verify that the design specifications are met. Then, the opacity CEMS is calibrated, installed, and operated for a specified length of time. During this specified time period, the system is evaluated to determine conformance with the established performance specifications.

2. *Definitions*

2.1 Continuous Emission Monitoring System. The total equipment required for the determination of opacity. The system consists of the following major subsystems:

2.1.1 Sample Interface. That portion of CEMS that protects the analyzer from the effects of the stack effluent and aids in keeping the optical surfaces clean.

2.1.2 Analyzer. That portion of the CEMS that senses the pollutant and generates an output that is a function of the opacity.

2.1.3 Data Recorder. That portion of the CEMS that provides a permanent record of the analyzer output in terms of opacity. The data recorder may include automatic data-reduction capabilities.

2.2 Transmissometer. That portion of the CEMS that includes the sample interface and the analyzer.

2.3 Transmittance. The fraction of incident light that is transmitted through an optical medium.

2.4 Opacity. The fraction of incident light that is attenuated by an optical medium. Opacity (Op) and transmittance (Tr) are related by: $Op=1-Tr$.

2.5 Optical Density. A logarithmic measure of the amount of incident light attenuated. Optical density (D) is related to the transmittance and opacity as follows:
$D=-\log_{10} Tr=-\log_{10} (1–Op)$.

2.6 Peak Spectral Response. The wavelength of maximum sensitivity of the transmissometer.

2.7 Mean Spectral Response. The wavelength that is the arithmetic mean value of the wavelength distribution for the effective spectral response curve of the transmissometer.

2.8 Angle of View. The angle that contains all of the radiation detected by the photodetector assembly of the analyzer at a level greater than 2.5 percent of the peak detector response.

2.9 Angle of Projection. The angle that contains all of the radiation projected from the lamp assembly of the analyzer at a level of greater than 2.5 percent of the peak illuminance.

2.10 Span Value. The opacity value at which the CEMS is set to produce the maximum data display output as specified in the applicable subpart.

2.11 Upscale Calibration Value. The opacity value at which a calibration check of the CEMS is performed by simulating an upscale opacity condition as viewed by the receiver.

2.12 Calibration Error. The difference between the opacity values indicated by the CEMS and the known values of a series of calibration attenuators (filters or screens).

2.13 Zero Drift. The difference in the CEMS output readings from the zero calibration value after a stated period of normal continuous operation during which no unscheduled maintenance, repair, or adjustment took place. A calibration value of 10 percent opacity or less may be used in place of the zero calibration value.

2.14 Calibration Drift. The difference in the CEMS output readings from the upscale calibration value after a stated period of normal continuous operation during which no unscheduled maintenance, repair, or adjustment took place.

2.15 Response Time. The amount of time it takes the CEMS to display on the data recorder 95 percent of a step change in opacity.

2.16 Conditioning Period. A period of time (168 hours minimum) during which the CEMS is operated without any unscheduled maintenance, repair, or adjustment prior to initiation of the operational test period.

2.17 Operational Test Period. A period of time (168 hours) during which the CEMS is expected to operate within the established performance specifications without any unscheduled maintenance, repair, or adjustment.

2.18 Path Length. The depth of effluent in the light beam between the receiver and the transmitter of a single-pass transmissometer, or the depth of effluent between the transceiver and reflector of a double-pass transmissometer. Two path lengths are referenced by this specification as follows:

2.18.1 Monitor Path Length. The path length (depth of effluent) at the installed location of the CEMS.

2.18.2 Emission Outlet Path Length. The path length (depth of effluent) at the location where emissions are released to the atmosphere. For noncircular outlets, $D_e=(2LW)\div(L+W)$, where L is the length of the outlet and W is the width of the outlet. Note that this definition does not apply to pressure baghouse outlets with multiple stacks, side discharge vents, ridge roof monitors, etc.

3. *Apparatus*

3.1 Opacity Continuous Emission Monitoring System. Any opacity CEMS that is expected to meet the design and performance specifications in Section 5 and a suitable data recorder, such as an analog strip chart recorder or other suitable device (e.g., digital computer) with an input signal range compatible with the analyzer output.

3.2 Calibration Attenuators. Minimum of three. These attenuators must be optical filters or screens with neutral spectral characteristics selected and calibrated according to the procedures in Sections 7.1.2 and 7.1.3, and of sufficient size to attenuate the entire light beam received by the detector of the transmissometer.

3.3 Upscale Calibration Value Attenuator. An optical filter with neutral spectral characteristics, a screen, or other device that produces an opacity value (corrected for path length, if necessary) that is greater than or equal to the applicable opacity standard but less than or equal to one-half the applicable instrument span value.

3.4 Calibration Spectrophotometer. A laboratory spectrophotometer meeting the following minimum design specifications:

Parameter	Specification
Wavelength range	400–700 nm.
Detector angle of view	<10°.
Accuracy	<0.5 percent transmittance, NBS traceable calibration.

4. *Installation Specifications*

Install the CEMS at a location where the opacity measurements are representative of the total emissions from the affected facility. These requirements can be met as follows:

4.1 Measurement Location. Select a measurement location that is (a) downstream from all particulate control equipment, (b) where condensed water vapor is not present, (c) free of interference from ambient light (applicable only if transmissometer is responsive to ambient light), and (d) accessible in order to permit routine maintenance. Accessibility is an important criterion because easy access for lens cleaning, alignment checks, calibration checks, and blower maintenance will help assure quality data.

4.2 Measurement Path. The primary concern in locating a transmissometer is determining a location of well-mixed stack gas. Two factors contribute to complete mixing of emission gases: turbulence and sufficient mixing time. The criteria listed below define conditions under which well-mixed emissions can be expected.

Select a measurement path that passes through a centroidal area equal to 25 percent of the cross section. Additional requirements or modifications must be met for certain locations as follows:

4.2.1 If the location is in a straight vertical section of stack or duct and is less than 4 equivalent diameters downstream from a bend, use a path that is in the plane defined by the upstream bend (see Figure 1–1).

4.2.2 If the location is in a straight vertical section of stack or duct and is less than 4 equivalent diameters upstream from a bend, use a path that is in the plane defined by the bend (see Figure 1–2).

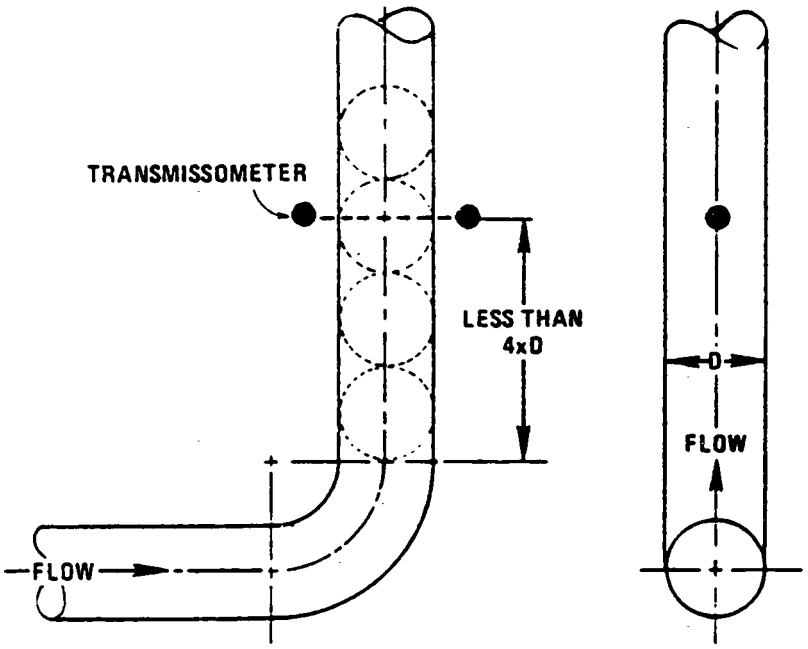

Figure 1-1. Transmissometer location downstream of a bend in a vertical stack.

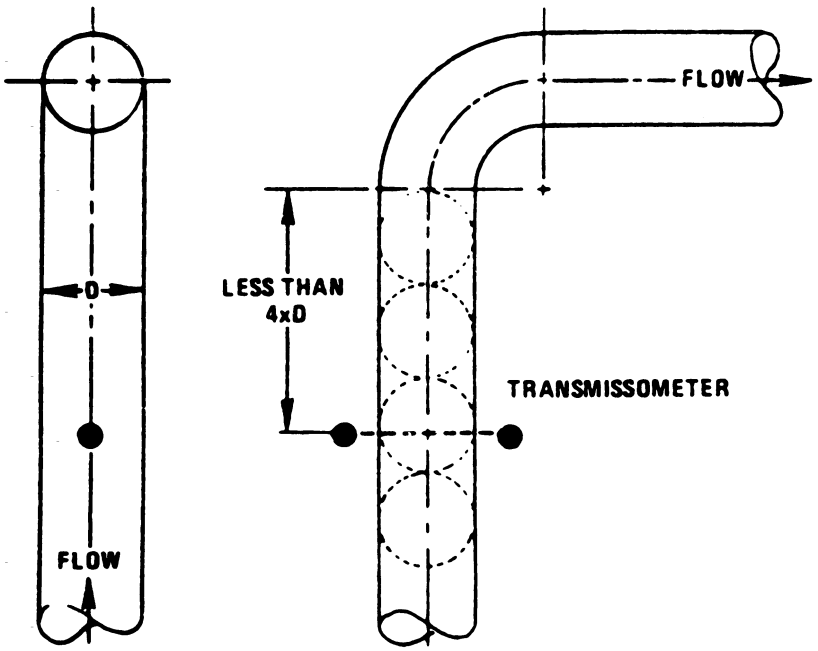

Figure 1-2. Transmissometer location upstream of a bend in a vertical stack.

4.2.3 If the location is in a straight vertical section of stack or duct and is less than 4 diameters downstream and is also less than 1 diameter upstream from a bend, use a path in the plane defined by the upstream bend (see Figure 1–3).

4.2.4 If the location is in a horizontal section of duct and is at least 4 diameters downstream from a vertical bend, use a path in the horizontal plane that is between one-third and one-half the distance up the vertical axis from the bottom of the duct (see Figure 1–4).

4.2.5 If the location is in a horizontal section of duct and is less than 4 diameters downstream from a vertical bend, use a path in the horizontal plane that is between one-half and two-thirds the distance up the vertical axis from the bottom of the duct for upward flow in the vertical section, and is between one-third and one-half the distance up the vertical axis from the bottom of the duct for downward flow (Figure 1–5).

4.3 Alternative Locations and Measurement Paths. Other locations and measurement paths may be selected by demonstrating to the Administrator that the average opacity measured at the alternative location or path is equivalent to the opacity as measured at a location meeting the criteria of Sections 4.1 and 4.2. The opacity at the alternative location is considered equivalent if the average value measured at the alternative location is within the range defined by the average measured opacity ±10 percent at the location meeting the installation criteria in Section 4.2, or if the difference between the two average opacity values is less than 2 percent opacity. To conduct this demonstration, measure the opacities at the two locations or paths for a minimum period of 2 hours and compare the results. The opacities of the two locations or paths may be measured at different times, but must be measured at the same process operating conditions. Alternative procedures

for determining acceptable locations may be used if approved by the Administrator.

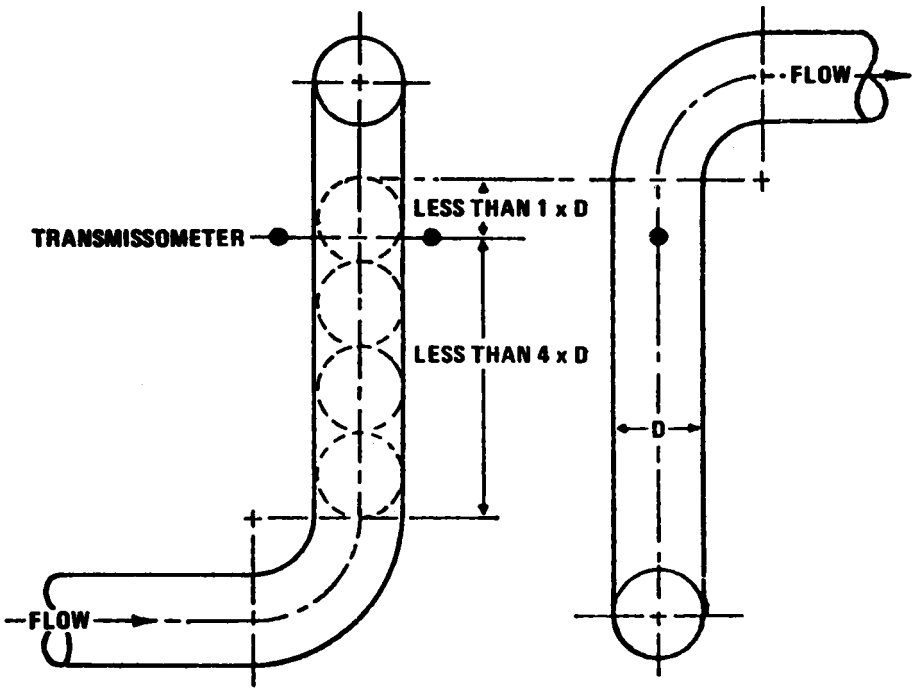

Figure 1-3. Transmissometer location between bends in a vertical stack.

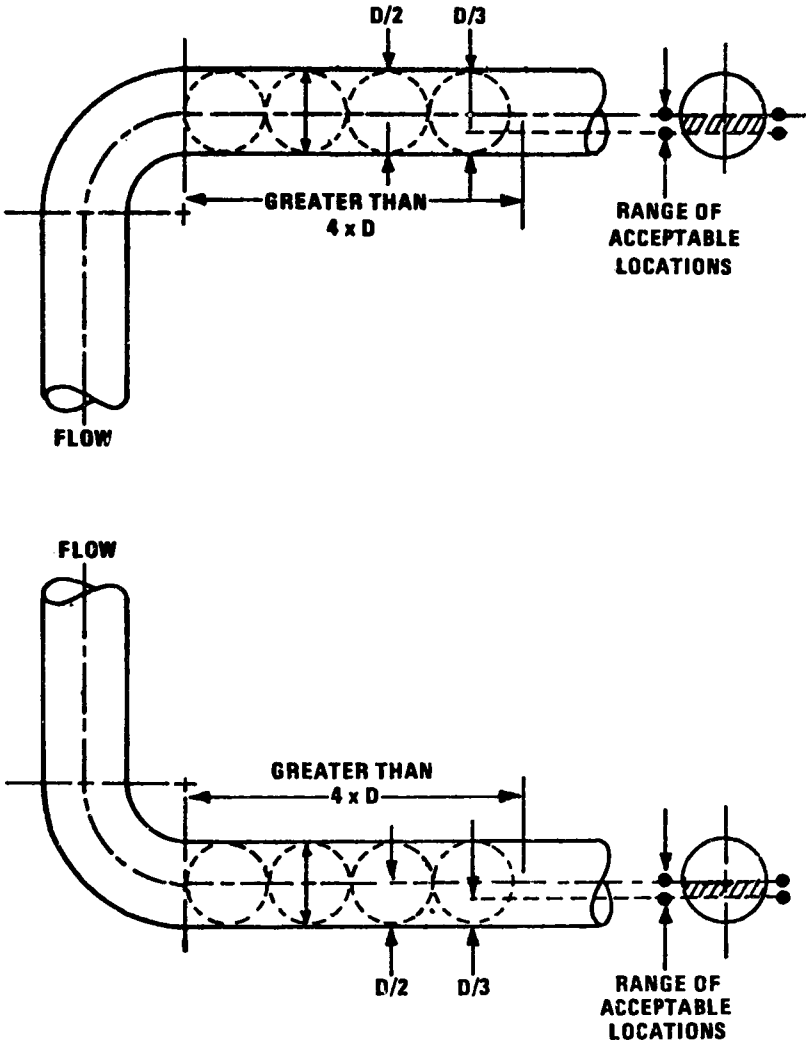

Figure 1-4. Transmissometer location greater than four diameters downstream of a vertical bend in a horizontal stack.

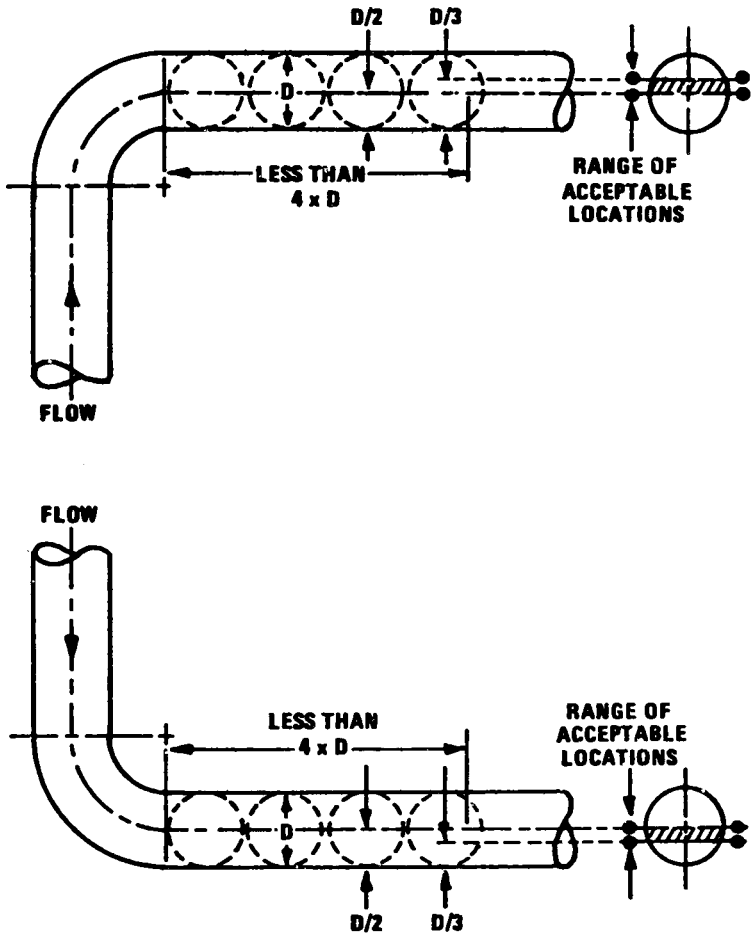

Figure 1-5. Transmissometer location less than four diameters downstream of a vertical bend in a horizontal stack.

5. *Design and Performance Specifications*

5.1 Design Specifications. The CEMS for opacity shall comply with the following design specifications:

5.1.1 Peak and Mean Spectral Responses. The peak and mean spectral responses must occur between 500 nm and 600 nm. The response at any wavelength below 400 nm or above 700 nm shall be less than 10 percent of the peak spectral response.

5.1.2 Angle of View. The total angle of view shall be no greater than 5 degrees.

5.1.3 Angle of Projection. The total angle of projection shall be no greater than 5 degrees.

5.1.4 Optical Alignment Sight. Each analyzer must provide some method for visually determining that the instrument is optically aligned. The method provided must be capable of indicating that the unit is misaligned when an error of +2 percent opacity occurs due to misalignment at a monitor path length of 8 meters. Instruments that are capable of providing an absolute zero check

while in operation on a stack or duct with effluent present, and while maintaining the same optical alignment during measurement and calibration, need not meet this requirement (e.g., some ''zero pipe'' units).

5.1.5 Simulated Zero and Upscale Calibration System. Each analyzer must include a calibration system for simulating a zero (or no greater than 10 percent) opacity and an upscale opacity value for the purpose of performing periodic checks of the transmissometer calibration while on an operating stack or duct. This calibration system will provide, as a minimum, a system check of the analyzer internal optics and all electronic circuitry including the lamp and photodetector assembly.

5.1.6 Access to External Optics. Each analyzer must provide a means of access to the optical surfaces exposed to the effluent stream in order to permit the surfaces to be cleaned without requiring removal of the unit from the source mounting or without requiring optical realignment of the unit.

5.1.7 Automatic Zero Compensation Indicator. If the CEMS has a feature that provides automatic zero compensation for dirt accumulation on exposed optical surfaces, the system must also provide some means of indicating when a compensation of 4 percent opacity has been exceeded. This indicator shall be at a location accessible to the operator (e.g., the data output terminal). During the operational test period, the system must provide some means (manual or automated) for determining the actual amount of zero compensation at the specified 24-hour intervals so that the actual 24-hour zero drift can be determined (see Section 7.4.1).

5.1.8 Slotted Tube. For transmissometers that use slotted tubes, the length of the slotted portion(s) must be equal to or greater than 90 percent of the effluent path length (distance between duct or stack walls). The slotted tube must be of sufficient size and orientation so as not to interfere with the free flow of effluent through the entire optical volume of the transmissometer photodetector. The manufacturer must also show that the transmissometer minimizes light reflections. As a minimum, this demonstration shall consist of laboratory operation of the transmissometer both with and without the slotted tube in position.

Should the operator desire to use a slotted tube design with a slotted portion equal to or less than 90 percent of the monitor path length, the operator must demonstrate to the Administrator that acceptable results can be obtained. As a minimum demonstration, the effluent opacity shall be measured using both the slotted tube instrument and another instrument meeting the requirement of this specification but not of the slotted tube design. The measurements must be made at the same location and at the same process operating conditions for a minimum period of 2 hours with each instrument. The shorter slotted tube may be used if the average opacity measured is equivalent to the opacity measured by the nonslotted tube design. The average opacity measured is equivalent if it is within the opacity range defined by the average opacity value ±10 percent measured by the nonslotted tube design, or if the difference between the average opacities is less than 2 percent opacity.

5.1.9 External Calibration Filter Access (optional). Provisions in the design of the transmissometer to accommodate an external calibration filter assembly are recommended. An adequate design would permit occasional use of external (i.e., not intrinsic to the instrument) neutral density filters to assess monitor operation.

5.2 Performance Specifications. The opacity CEMS specifications are listed in Table 1–1.

6. *Design Specifications Verification Procedure*

These procedures will not apply to all instrument designs and will require modification in some cases; all procedural modifications are subject to the approval of the Administrator.

Test each analyzer for conformance with the design specifications of Sections 5.1.1–5.1.4, or obtain a certificate of conformance from the analyzer manufacturer as follows:

6.1 Spectral Response. Obtain detector response, lamp emissivity, and filter transmittance data for the components used in the measurement system from their respective manufacturers, and develop the effective spectral response curve of the transmissometer. Then determine and report the peak spectral response wavelength, the mean spectral response wavelength, and the maximum response at any wavelength below 400 nm and above 700 nm expressed as a percentage of the peak response.

Alternatively, conduct a laboratory measurement of the instrument's spectral response curve. The procedures of this laboratory evaluation are subject to approval of the Administrator.

TABLE 1–1—PERFORMANCE SPECIFICATIONS

Parameter	Specifications
1. Calibration error[a]	≤3 percent opacity.
2. Response time	≤10 seconds.
3. Conditioning period[b]	≤168 hours.
4. Operational test period[b]	≤168 hours.
5. Zero drift (24-hour)[a]	≤2 percent opacity.
6. Calibration drift (24-hour)[a]	≤2 percent opacity.
7. Data recorder resolution	≤0.5 percent opacity.

[a] Expressed as the sum of the absolute value of the mean and the absolute value of the confidence coefficient.

[b] During the conditioning and operational test periods, the CEMS must not require any corrective maintenance, repair, replacement, or adjustment other than that clearly specified as routine and required in the operation and maintenance manuals.

6.2 Angle of View. Set up the receiver as specified by the manufacturer's written instructions. Draw an arc with radius of 3 meters in the horizontal direction. Using a small (less than 3 centimeters) nondirectional light source, measure the receiver response at 5-centimeter intervals on the arc for 30 centimeters on either side of the detector centerline. Repeat the test in the vertical direction. Then for both the horizontal and vertical directions, calculate the response of the receiver as a function of viewing angle (26 centimeters of arc with a radius of 3 meters equals 5 degrees), report relative angle of view curves, and determine and report the angle of view.

6.3 Angle of Projection. Set up the projector as specified by the manufacturer's written instructions. Draw an arc with a radius of 3 meters in the horizontal direction. Using a small (less than 3 centimeters) photoelectric light detector, measure the light intensity at 5-centimeter intervals on the arc for 30 centimeters on either side of the light source centerline of projection. Repeat the test in the vertical direction. Then for both the horizontal and vertical directions, calculate the response of the photoelectric detector as a function of the projection angle (26 centimeters of arc with a radius of 3 meters equals 5 degrees), report the relative angle of projection curves, and determine and report the angle of projection.

6.4 Optical Alignment Sight. In the laboratory set the instrument up as specified by the manufacturer's written instructions for a monitor path length of 8 meters. Align, zero, and span the instrument. Insert an attenuator of 10 percent (nominal opacity) into the instrument path length. Slowly misalign the projector unit by rotating it until a positive or negative shift of 2 percent opacity is obtained by the data recorder. Then, following the manufacturer's written instructions, check the alignment. The alignment procedure must indicate that the instrument is misaligned. Repeat this test for lateral misalignment of the projector. Realign the instrument and follow the same procedure for checking misalignment of the receiver or retroreflector unit (lateral misalignment only).

6.5 Manufacturer's Certificate of Conformance (alternative to above). Obtain from the manufacturer a certificate of conformance stating that the first analyzer randomly sampled from each month's production was tested according to Sections 6.1 through 6.4 and satisfactorily met all requirements of Section 5 of this specification. If any of the requirements were not met, the certificate must state that the entire month's analyzer production was resampled according to the military standard 105D sampling procedure (MIL–STD–105D) inspection level II; was retested for each of the applicable requirements under Section 5 of this specification; and was determined to be acceptable under MIL–STD–105D procedures, acceptable quality level 1.0. The certificate of conformance must include the results of each test performed for the analyzer(s) sampled during the month the analyzer being installed was produced.

7. *Performance Specification Verification Procedure*

Test each CEMS that conforms to the design specifications (Section 5.1) using the following procedures to determine conformance with the specifications of Table 1–1. These tests are to be performed using the data recording system to be employed during monitoring. Prior approval from the Administrator is required if different data recording systems are used during the performance test and monitoring.

7.1 Preliminary Adjustments and Tests. Before installing the system on the stack, perform these steps or tests at the affected facility or in the manufacturer's laboratory.

7.1.1 Equipment Preparation. Set up and calibrate the CEMS for the monitor path length to be used in the installation as specified by the manufacturer's written instructions. For this specification, the mounting distance between the transmitter and receiver/reflector unit at the source must be measured prior to performing the calibrations (do not use distances from engineering drawings). If the CEMS has automatic path length adjustment, follow the manufacturer's instructions to adjust the signal output from the analyzer in order to yield results based on the emission outlet path length. Set the instrument and data recording system ranges so that maximum instrument output is within the span range specified in the applicable subpart.

Align the instrument so that maximum system response is obtained during a zero (or upscale) check performed across the simulated monitor path length. As part of this alignment, include rotating the reflector unit (detector unit for single pass instruments) on its axis until the point of maximum instrument response is obtained.

Follow the manufacturer's instructions to zero and span the instrument. Perform the zero alignment adjustment by balancing the response of the CEMS so that the simulated zero check coincides with the actual zero check performed across the simulated monitor path length. At this time, measure and record the indicated upscale calibration value. The calibration value reading must be within the required opacity range (Section 3.3).

7.1.2 Calibration Attenuator Selection. Based on the span value specified in the applicable subpart, select a minimum of three calibration attenuators (low, mid, and high range) using Table 1–2.

If the system is operating with automatic path length compensation, calculate the attenuator values required to obtain a system response equivalent to the applicable values shown in Table 1–2; use Equation 1–1 for the conversion. A series of filters with nominal optical density (opacity) values of 0.1(20), 0.2(37), 0.3(50), 0.4(60), 0.5(68), 0.6(75), 0.7(80), 0.8(84), 0.9(88), and 1.0(90) are commercially available. Within this limitation of filter availability, select the calibration attenuators having the values given in Table 1–2 or having values closest to those calculated by Equation 1–1.

$$D_1 = D_2\left(L_1 / L_2\right) \qquad \text{Eq. 1-1}$$

TABLE 1–2—REQUIRED CALIBRATION ATTENUATOR VALUES (NOMINAL)

Span value (percent opacity)	Calibrated attenuator optical density (equivalent opacity in parenthesis)—D_2		
	Low-range	Mid-range	High-range
40	0.05 (11)	0.1 (20)	0.2 (37)
50	0.1 (20)	0.2 (37)	0.3 (50)
60	0.1 (20)	0.2 (37)	0.3 (50)
70	0.1 (20)	0.3 (50)	0.4 (60)
80	0.1 (20)	0.3 (50)	0.6 (75)
90	0.1 (20)	0.4 (60)	0.7 (80)
100	0.1 (20)	0.4 (60)	0.9 (87.5)

Where:

D_1=Nominal optical density value of required mid, low, or high range calibration attenuators.

D_2=Desired attenuator optical density output value from Table 1–2 at the span required by the applicable subpart.

L_1=Monitor path length.

L_2=Emission outlet path length.

7.1.3 Attenuator Calibration. Select a laboratory calibration spectrophotometer meeting the specifications of Section 3.4. Using this calibration spectrophotometer, calibrate the required filters or screens. Make measurements at wavelength intervals of 20 nm or less. As an alternative procedure, use the calibration spectrophotometer to measure the C.I.E. Daylight$_C$ luminous transmittance of the attenuators. Check the attenuators several times, at different locations on the attenuator.

The attenuator manufacturer must specify the period of time over which the attenuator values can be considered stable, as well as any special handling and storing procedures required to enhance attenuator stability. To assure stability, recheck attenuator values at intervals less than or equal to the period stability guaranteed by the manufacturer. Recheck at least every 3 months. If desired, perform the stability checks with an instrument (secondary) other than the calibration spectrophotometer. This secondary instrument must be a high-quality laboratory transmissometer or spectrophotometer, and the same instrument must always be used for the stability checks. If a secondary instrument is to be used for stability checks, the value of the calibrated attenuator must be measured on this secondary instrument immediately following initial calibration. If over a period of time an attenuator value changes by more than ±2 percent opacity, recalibrate the attenuator on the calibration spectrophotometer or replace it with a new attenuator.

If this procedure is conducted by the filter or screen manufacturer or by an independent laboratory, obtain a statement certifying the values and certifying that the specified procedure, or equivalent, is used.

7.1.4 Calibration Error Test. Insert the calibration attenuators (low, mid, and high range) in the transmissometer path at or as near the midpoint of the path as feasible. Place the attenuator in the measurement path at a point where the effluent will be measured; i.e., do not place the calibration attenuator in the instrument housing. If the instrument manufacturer recommends a procedure wherein the attenuators are placed in the instrument housing, the manufacturer must provide data showing this alternative procedure is acceptable. While inserting the attenuator, assure that the entire beam received by the detector will pass through the attenuator and that the attenuator is inserted in a manner which minimizes interference from reflected light. Make a total of five nonconsecutive readings for each filter. Record the monitoring system output readings in percent opacity (see example Figure 1–6). Then, if the path length is not adjusted by the measurement system, subtract the actual calibration attenuator value from the value indicated by the measurement system recorder for each of the 15 readings obtained. If the path length is adjusted by the measurement system, subtract the ''path adjusted'' calibration attenuator values from the values indicated by the measurement system recorder (the ''path adjusted'' calibration attenuator values are calculated using Equation 1–6 or 1–7). Calculate the arithmetic mean difference, standard deviation, and confidence coefficient of the five tests at each attenuator value using Equations 1–2, 1–3, and 1–4 (Sections 8.1–8.3). Calculate the sum of the absolute value of the mean difference and the absolute value of the confidence coefficient for each of the three test attenuators; report these three values as the calibration error.

Person Conducting Test _____ Analyzer Manufacturer _____

Affiliation _____ Model/Serial No. _____

Date _____ Location _____

Monitor Pathlength, L_1 _____ Emission Outlet Pathlength, L_2 _____

Monitoring System Output Pathlength Corrected? Yes____ No_____

Calibrated Neutral Density Filter Values

Actual Optical Density (Opacity):

Low-Range_____(_____)
Mid-Range_____(_____)
High Range_____(_____)

Path Adjusted Optical Density (Opacity):

Low-Range_____(_____)
Mid-Range _____(_____)
High-Range_____(_____)

Run Number	Calibration Filter Value (Path-Adjusted Percent Opacity)	Instrument Reading (Opacity), percent	Arithmetic Difference (Opacity), percent		
			Low	Mid	High
1 – Low				–	–
2 – Mid			–		–
3 – High			–	–	
4 – Low				–	–
5 – Mid			–		–
6 – High			–	–	
7 – Low				–	–
8 – Mid			–		–
9 – High			–	–	
10 – Low				–	–
11 – Mid			–		–
12 – High			–	–	
13 – Low				–	–
14 – Mid			–		–
15 – High			–	–	–
	Arithmetic Mean (Equation 1-2): $\bar{X}$				
	Confidence Coefficient (Equation 1-4): CC				
	Calibration Error $\lvert\bar{X}\rvert + \lvert CC\rvert$				

Figure 1-6. Calibration error determination.

7.1.5 System Response Test. Insert the high-range calibration attenuator in the transmissometer path five times, and record the time required for the system to respond to 95 percent of final zero and high-range filter values (see example Figure 1–7). Then calculate the mean time of the 10 upscale and downscale tests and report this value as the system response time.

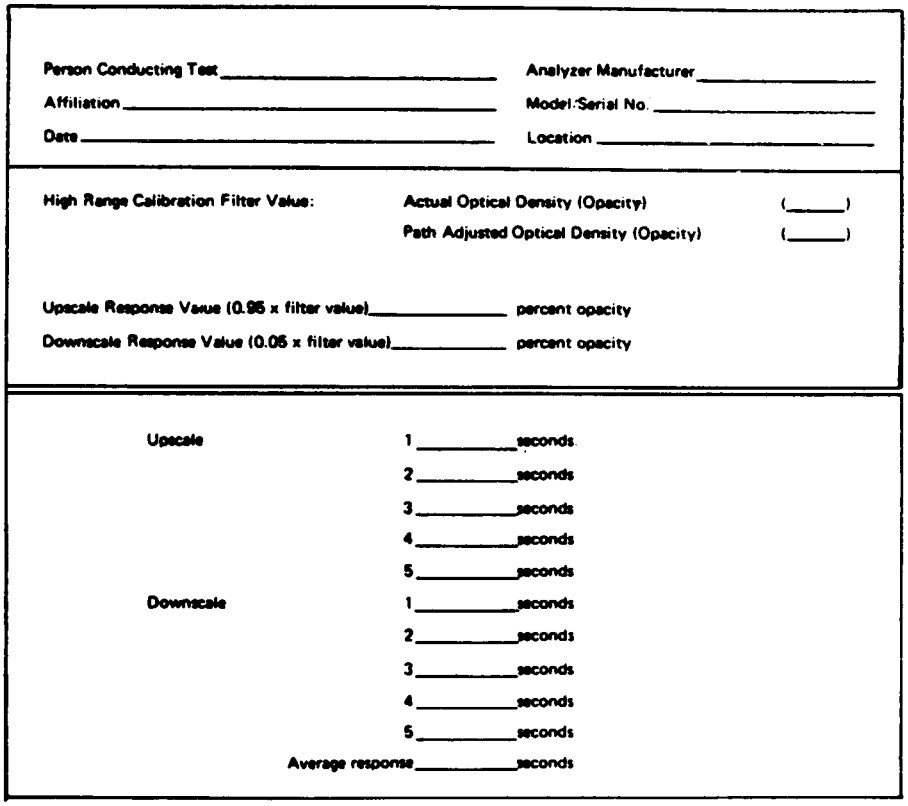

Figure 1-7. Response time determination.

7.2 Preliminary Field Adjustments. Install the CEMS on the affected facility according to the manufacturer's written instructions and the specifications in Section 4, and perform the following preliminary adjustments:

7.2.1 Optical and Zero Alignment. When the facility is not in operation, optically align the light beam of the transmissometer upon the optical surface located across the duct or stack (i.e., the retroreflector or photodetector, as applicable) in accordance with the manufacturer's instructions; verify the alignment with the optical alignment sight. Under clear stack conditions, verify the zero alignment (performed in Section 7.1.1) by assuring that the monitoring system response for the simulated zero check coincides with the actual zero measured by the transmissometer across the clear stack. Adjust the zero alignment, if necessary. Then, after the affected facility has been started up and the effluent stream reaches normal operating temperature, recheck the optical alignment. If the optical alignment has shifted, realign the optics. Note: Careful consideration should be given to whether a "clear stack" condition exists. It is suggested that the stack be monitored and the data output (instantaneous real-time basis) be examined to determine whether fluctuations from zero opacity are occurring before a clear stack condition is assumed to exist.

7.2.2 Optical and Zero Alignment (Alternative Procedure). The procedure given in 7.2.1 is the preferred procedure and should be used whenever possible; however, if the facility is operating and a zero stack condition cannot practicably be obtained, use the zero alignment obtained during the preliminary adjustments (Section 7.1.1) before installing the transmissometer on the stack. After completing all the preliminary adjustments and tests required in Section 7.1, install the system at the source and align the optics,

i.e., align the light beam from the transmissometer upon the optical surface located across the duct or stack in accordance with the manufacturer's instruction. Verify the alignment with the optical alignment sight. The zero alignment conducted in this manner must be verified and adjusted, if necessary, the first time a clear stack condition is obtained after the operation test period has been completed.

7.3 Conditioning Period. After completing the preliminary field adjustments (Section 7.2), operate the CEMS according to the manufacturer's instructions for an initial conditioning period of not less than 168 hours while the source is operating. Except during times of instrument zero and upscale calibration checks, the CEMS must analyze the effluent gas for opacity and produce a permanent record of the CEMS output. During this conditioning period there must be no unscheduled maintenance, repair, or adjustment. Conduct daily zero calibration and upscale calibration checks; and, when accumulated drift exceeds the daily operating limits, make adjustments and clean the exposed optical surfaces. The data recorder must reflect these checks and adjustments. At the end of the operational test period, verify that the instrument optical alignment is correct. If the conditioning period is interrupted because of source breakdown (record the dates and times of process shutdown), continue the 168-hour period following resumption of source operation. If the conditioning period is interrupted because of monitor failure, restart the 168-hour conditioning period when the monitor becomes operational.

7.4 Operational Test Period. After completing the conditioning period, operate the system for an additional 168-hour period. The 168-hour operational test period need not follow immediately after the 168-hour conditioning period. Except during times of instrument zero and upscale calibration checks, the CEMS must analyze the effluent gas for opacity and must produce a permanent record of the CEMS output. During this period, there will be no unscheduled maintenance, repair, or adjustment. Zero and calibration adjustments, optical surface cleaning, and optical realignment may be performed (optional) only at 24-hour intervals or at such shorter intervals as the manufacturer's written instructions specify. Automatic zero and calibration adjustments made by the CEMS without operator intervention or initiation are allowable at any time. During the operational test period, record all adjustments, realignments, and lens cleanings. If the operational test period is interrupted because of source breakdown, continue the 168-hour period following resumption of source operation. If the test period is interrupted because of monitor failure, restart the 168-hour period when the monitor becomes operational. During the operational test period, perform the following test procedures:

7.4.1 Zero Drift Test. At the outset of the 168-hour operational test period, record the initial simulated zero (or no greater than 10 percent) and upscale opacity readings (see example Figure 1–8). After each 24-hour interval, check and record the final zero reading before any optional or required cleaning and adjustment. Zero and upscale calibration adjustments, optical surface cleaning, and optical realignment may be performed only at 24-hour intervals (or at such shorter intervals as the manufacturer's written instructions specify), but are optional. However, adjustments and cleaning must be performed when the accumulated zero calibration or upscale calibration drift exceeds the 24-hour drift specification (±2 percent opacity). If no adjustments are made after the zero check, record the final zero reading as the initial zero reading for the next 24-hour period. If adjustments are made, record the zero value after adjustment as the initial zero value for the next 24-hour period. If the instrument has an automatic zero compensation feature for dirt accumulation on exposed lenses and the zero value cannot be measured before compensation is entered, then record the amount of automatic zero compensation (as opacity) for the final zero reading of each 24-hour period. (List the indicated zero values of the CEMS in parenthesis.) From the initial and final zero readings, calculate the zero drift for each 24-hour period. Then calculate the arithmetic mean, standard deviation, and confidence coefficient of the 24-hour zero drift and the 95 percent confidence interval using Equations 1–2, 1–3, and 1–4. Calculate the sum of the absolute value of the mean and the absolute value of the confidence coefficient, and report this value as the 24-hour zero drift.

Person Conducting Test _____ Analyzer Manufacturer _____

Affiliation _____ Model/Serial No. _____

Date _____ Location _____

Monitor Pathlength, L_1 _____ Emission Outlet Pathlength, L_2 _____

Monitoring System Output Pathlength Corrected: ? Yes _____ No _____

Upscale Calibration Value: Actual Optical Density (Opacity) _____ (_____)

Path Adjusted Optical Density (Opacity) _____ (_____)

Date	Time		Percent Opacity										Alignment	
			Zero Reading*		Zero Drift	Zero adjusted?	Upscale Calibration Reading		Upscale Drift	Calibration Drift	Span adjusted?	Lens cleaned?		
	Begin	End	Initial A	Final B	C = B−A		Initial D	Final E	F = E−D	G = F−C**			Checked?	Adjusted?

Arithmetic Mean	(Eq. 1-2)		Arithmetic Mean (Eq. 1-2)	
Confidence Coefficient	(Eq. 1-4)		Confidence Coefficient (Eq. 1-4)	
Zero Drift	(Eq. 1-5)		Calibration Drift (Eq. 1-5)	

* without automatic zero compensation

** if zero was adjusted (manually or automatically) prior to upscale check, then use C = 0.

Figure 1-8. Zero calibration drift determination.

7.4.2 Upscale Drift Test. At each 24-hour interval, after the zero calibration value has been checked and any optional or required adjustments have been made, check and record the simulated upscale calibration value. If no further adjustments are made to the calibration system at this time, record the final upscale calibration value as the initial upscale value for the next 24-hour period. If an instrument span adjustment is made, record the upscale value after adjustment as the initial upscale value for the next 24-hour period. From the initial and final upscale readings, calculate the upscale calibration drift for each 24-hour period. Then calculate the arithmetic mean, standard deviation, and confidence coefficient of the 24-

hour calibration drift and the 95 percent confidence interval using Equations 1–2, 1–3, and 1–4. Calculate the sum of the absolute value of the mean and the absolute value of the confidence coefficient, and report this value as the 24-hour calibration drift.

8. *Equations*

8.1 Arithmetic Mean. Calculate the mean, x, of a set of data as follows:

$$\bar{x} = \frac{1}{n}\sum_{i=1}^{n} x_i \qquad \text{(Eq. 1–2)}$$

where:

n=Number of data points.

$\sum_{i=1}^{n} x_i$ = Algebraic sum of the individual measurements x_i.

8.2 Standard Deviation. Calculate the standard deviation S_d as follows:

$$S_d = \sqrt{\frac{\sum_{i=1}^{n} x_i^2 - \frac{\left(\sum_{i=1}^{n} x_i\right)^2}{n}}{n-1}} \qquad \text{(Eq. 1–3)}$$

8.3 Confidence Coefficient. Calculate the 2.5 percent error confidence coefficient (one-tailed), CC, as follows:

$$CC = t_{0.975}\frac{S_d}{\sqrt{n}} \qquad \text{Eq. 1–4}$$

Where:

$t_{0.975}$=t-value (see Table 1–3).

8.4 Error. Calculate the error (i.e., calibration error, zero drift, and calibration drift), Er, as follows:

$$Er = |\bar{x}| + |CC| \qquad \text{(Eq. 1–5)}$$

TABLE 1–3—T-VALUES

n[a]	$t_{0.975}$	n[a]	$t_{0.975}$	n[a]	$t_{0.975}$
2	12.706	7	2.447	12	2.201
3	4.303	8	2.365	13	2.179
4	3.182	9	2.306	14	2.160
5	2.776	10	2.262	15	2.145
6	2.571	11	2.228	16	2.131

[a] The values in this table are already corrected for n–1 degrees of freedom. Use n equal to the number of individual values.

8.5 Conversion of Opacity Values from Monitor Path Length to Emission Outlet Path Length. When the monitor path length is different than the emission outlet path length, use either of the following equations to convert from one basis to the other (this conversion may be automatically calculated by the monitoring system):

$$\log(1-Op_2)=(L_2/L_1)\log(1-Op_1) \qquad \text{(Eq. 1–6)}$$

$$D_2=(L_2/L_1)\,D_1 \qquad \text{(Eq. 1–7)}$$

Where:

Op_1 = Opacity of the effluent based upon L_1.
Op_2 = Opacity of the effluent based upon L_2.
L_1 = Monitor path length.
L_2 = Emission outlet path length.
D_1 = Optical density of the effluent based upon L_1.
D_2 = Optical density of the effluent based upon L_2.

9. *Reporting*

Report the following (summarize in tabular form where appropriate).

9.1 General Information.

a. Facility being monitored.
b. Person(s) responsible for operational and conditioning test periods and affiliation.
c. Instrument manufacturer.
d. Instrument model number
e. Instrument serial number.
f. Month/year manufactured.
g. Schematic of monitoring system measurement path location.
h. Monitor pathlength, meters.
i. Emission outlet pathlength, meters.
j. System span value, percent opacity.
k. Upscale calibration value, percent opacity.
l. Calibrated Attenuator values (low, mid, and high range), percent opacity.

9.2 Design Specification Test Results.

a. Peak spectral response, nm.
b. Mean spectral response, nm.
c. Response above 700 nm, percent of peak.
d. Response below 400 nm, percent of peak.
e. Total angle of view, degrees.
f. Total angle of projection, degrees.
g. Results of optical alignment sight test.
h. Serial number, month/year of manufacturer for unit actually tested to show design conformance.

9.3 Performance Specification Test Results.

a. Calibration error, high-range, percent opacity.
b. Calibration error, mid-range, percent opacity.
c. Calibration error, low-range, percent opacity.
d. Response time, seconds.
e. 24-hour zero drift, percent opacity.
f. 24-hour calibration drift, percent opacity.
g. Lens cleanings, clock time.
h. Optical alignment adjustments, clock time.

9.4 Statements. Provide a statement that the conditioning and operational test periods were completed according to the requirements of Sections 7.3 and 7.4. In this statement, include the time periods during which the conditioning and operational test periods were conducted.

9.5 Appendix. Provide the data tabulations and calculations for the above tabulated results.

10. *Retest*

If the CEMS operates within the specified performance parameters of Table 1–1, the PS tests will be successfully concluded. If the CEMS fails one of the preliminary tests, make the necessary corrections and repeat the performance testing for the failed specification prior to conducting the operational test period. If the CEMS fails to meet the specifications for the operational test period, make the necessary corrections and repeat the operational test period; depending on the correction made, it may be necessary to repeat the design and preliminary performance tests.

11. *Bibliography*

1. Experimental Statistics. Department of Commerce. National Bureau of Standards Handbook 91. Paragraph 3–3.1.4 1963. pp. 3–31.

12. Performance Specifications for Stationary-Source Monitoring Systems for Gases and Visible Emissions. U.S. Environmental Protection Agency. Research Triangle Park, NC. EPA–650/2–74–013. January 1974.

PERFORMANCE SPECIFICATION 2—SPECIFICATIONS AND TEST PROCEDURES FOR SO_2 AND NO_x CONTINUOUS EMISSION MONITORING SYSTEMS IN STATIONARY SOURCES

1. *Applicability and Principle*

1.1 Applicability. This specification is to be used for evaluating the acceptability of SO_2 and NO_x continuous emission monitoring systems (CEMS's) at the time of or soon after installation and whenever specified in the regulations. The CEMS may include, for certain stationary sources, a diluent (O_2 or CO_2) monitor.

This specification is not designed to evaluate the installed CEMS performance over an extended period of time nor does it identify specific calibration techniques and other auxiliary procedures to assess the CEMS performance. The source owner or operator, however, is responsible to properly calibrate, maintain, and operate the CEMS. To evaluate the CEMS performance, the Administrator may require, under Section 114 of the Act, the operator to conduct CEMS performance evaluations at other times besides the initial test. See §60.13(c).

1.2 Principle. Installation and measurement location specifications, performance and equipment specifications, test procedures, and data reduction procedures are included in this specification. Reference method tests and calibration drift tests are conducted to determined conformance of the CEMS with the specification.

2. *Definitions*

2.1 Continuous Emission Monitoring System. The total equipment required for the determination of a gas concentration or emission rate. The system consists of the following major subsystems:

2.1.1 Sample Interface. That portion of the CEMS used for one or more of the following: sample acquisition, sample transportation, and sample conditioning, or protection of the monitor from the effects of the stack effluent.

2.1.2 Pollutant Analyzer. That portion of the CEMS that senses the pollutant gas and generates an output proportional to the gas concentration.

2.1.3 Diluent Analyzer (if applicable). That portion of the CEMS that senses the diluent gas (e.g., CO_2 or O_2) and generates an output proportional to the gas concentration.

2.1.4 Data Recorder. That portion of the CEMS that provides a permanent record of the analyzer output. The data recorder may include automatic data reduction capabilities.

2.2 Point CEMS. A CEMS that measures the gas concentration either at a single point or along a path equal to or less than 10 percent of the equivalent diameter of the stack or duct cross section.

2.3 Path CEMS. A CEMS that measures the gas concentration along a path greater than 10 percent of the equivalent diameter of the stack or duct cross section.

2.4 Span Value. The upper limit of a gas concentration measurement range specified for affected source categories in the applicable subpart of the regulations.

2.5 Relative Accuracy (RA). The absolute mean difference between the gas concentration or emission rate determined by the CEMS and the value determined by the RM's plus the 2.5 percent error confidence coefficient of a series of tests divided by the mean of the RM tests or the applicable emission limit.

2.6 Calibration Drift (CD). The difference in the CEMS output readings from the established reference value after a stated period of operation during which no unscheduled maintenance, repair, or adjustment took place.

2.7 Centroidal Area. A concentric area that is geometrically similar to the stack or duct cross section and is no greater than 1 percent of the stack or duct cross-sectional area.

2.8 Representative Results. As defined by the RM test procedure outlined in this specification.

3. *Installation and Measurement Location Specifications*

3.1 The CEMS Installation and Measurement Location. Install the CEMS at an accessible location where the pollutant concentration or emission rate measurements are directly representative or can be corrected so as to be representative of the total emissions from the affected facility or at the measurement location cross section. Then select representative measurement points or paths for monitoring in locations that the CEMS will pass the RA test (see Section 7). If the cause of failure to meet the RA test is determined to be the measurement location and a satisfactory correction technique cannot be established, the Administrator may require the CEMS to be relocated.

Suggested measurement locations and points or paths that are most likely to provide data that will meet the RA requirements are listed below.

3.1.1 Measurement Location. It is suggested that the measurement location be (1) at least two equivalent diameters downstream from the nearest control device, the point of pollutant generation, or other point at which a change in the pollutant concentration or emission rate may occur and (2) at least a half equivalent diameter upstream from the effluent exhaust or control device.

3.1.2 Point CEMS. It is suggested that the measurement point be (1) no less than 1.0 meter from the stack or duct wall or (2) within or centrally located over the centroidal area of the stack or duct cross section.

3.1.3 Path CEMS. It is suggested that the effective measurement path (1) be totally within the inner area bounded by a line 1.0 meter from the stack or duct wall, or (2) have at least 70 percent of the path within the inner 50 percent of the stack or duct cross-sectional area, or (3) be centrally located over any part of the centroidal area.

3.2 Reference Method (RM) Measurement Location and Traverse Points. Select, as appropriate, an accessible RM measurement point at least two equivalent diameters downstream from the nearest control device, the point of pollutant generation, or other point at which a change in the pollutant concentration or emission rate may occur, and at least a half equivalent diameter upstream from the effluent exhaust or control device. When pollutant concentration changes are due solely to diluent leakage (e.g., air heater leakages) and pollutants and diluents are simultaneously measured at the same location, a half diameter may be used in lieu of two equivalent diameters. The CEMS and RM locations need not be the same.

Then select traverse points that assure acquisition of representative samples over the stack or duct cross section. The minimum requirements are as follows: Establish a ''measurement line'' that passes through the centroidal area and in the direction of any expected stratification. If this line interferes with the CEMS measurements, displace the line up to 30 cm (or 5 percent of the equivalent diameter of the cross section, whichever is less) from the centroidal area. Locate three traverse points at 16.7, 50.0, and 83.3 percent of the measurement line. If the measurement line is longer than 2.4 meters and pollutant stratification is not expected, the tester may choose to locate the three traverse points on the line at 0.4, 1.2, and 2.0 meters from the stack or duct wall. This option must not be used after wet scrubbers or at points where two streams with different pollutant concentrations are combined. The tester may select other traverse points, provided that they can be shown to the satisfaction of the Administrator to provide a representative sample over the stack or duct cross section. Conduct all necessary RM tests within 3 cm (but no less than 3 cm from the stack or duct wall) of the traverse points.

4. *Performance and Equipment Specifications*

4.1 Data Recorder Scale. The CEMS data recorder response range must include zero and a high-level value. The high-level value is chosen by the source owner or operator and is defined as follows:

For a CEMS intended to measure an uncontrolled emission (e.g., SO_2 measurements at the inlet of a flue gas desulfurization unit), the high-level value must be between 1.25 and 2 times the average potential emission level, unless otherwise specified in an applicable subpart of the regulations. For a CEMS installed to measure controlled emissions or emissions that are in compliance with an applicable regulation, the high-level value must be between 1.5 times the pollutant concentration corresponding to the emission standard level and the span value. If a lower high-level value is used, the source must have the capability of measuring emissions which exceed the full-scale limit of the CEMS in accordance with the requirements of applicable regulations.

The data recorder output must be established so that the high-level value is read between 90 and 100 percent of the data recorder full scale. (This scale requirement may not be applicable to digital data recorders.) The calibration gas, optical filter, or cell values used to establish the data recorder scale should produce the zero and high-level values. Alternatively, a calibration gas, optical filter, or cell value between 50 and 100 percent of the high-level value may be used in place of the high-level value provided the data recorder full-scale requirements as described above are met.

The CEMS design must also allow the determination of calibration drift at the zero and high-level values. If this is not possible or practical, the design must allow these determinations to be conducted at a low-level value (zero to 20 percent of the high-level value) and at a value between 50 and 100 percent of the high-level value. In special cases, if not already approved, the Administrator may approve a single-point calibration-drift determination.

4.2 Calibration Drift. The CEMS calibration must not drift or deviate from the reference value of the gas cylinder, gas cell, or optical filter by more than 2.5 percent of the span value. If the CEMS includes pollutant and diluent monitors, the calibration drift must be determined separately for each in terms of concentrations (see PS 3 for the diluent specifications).

4.3 The CEMS RA. The RA of the CEMS must be no greater than 20 percent of the mean value of the RM test data in terms of the units of the emission standard or 10 percent of the applicable standard, whichever is greater. For SO_2 emission standards between 130 and 86 ng/J (0.30 and 0.20 lb/million Btu), use 15 percent of the applicable standard; below 86 ng/J (0.20 lb/million Btu), use 20 percent of emission standard.

5. *Performance Specification Test Procedure*

5.1 Pretest Preparation. Install the CEMS, prepare the RM test site according to the specifications in Section 3, and prepare the CEMS for operation according to the manufacturer's written instructions.

5.2 Calibration Drift Test Period. While the affected facility is operating at more than 50 percent of normal load, or as specified in an applicable subpart, determine the magnitude of the calibration drift (CD) once each day (at 24-hour intervals) for 7 consecutive days according to the procedure given in Section 6. To meet the requirement of Section 4.2, none of the CD's must exceed the specification.

5.3 RA Test Period. Conduct the RA test according to the procedure given in Section 7 while the affected facility is operating at more than 50 percent or normal load, or as specified in an applicable subpart. To meet the specifications, the RA must be equal to or less than 20 percent of the mean value of the RM test data in terms of the units of the emission standard or 10 percent of the applicable standard, whichever is greater. For instruments that use common components to measure more than one effluent gas constituent, all channels must simultaneously pass the RA requirement, unless it can be demonstrated that any adjustments made to one channel did not affect the others.

The RA test may be conducted during the CD test period.

6. *The CEMS Calibration Drift Test Procedure*

The CD measurement is to verify the ability of the CEMS to conform to the established CEMS calibration used for determining the emission concentration or emission rate. Therefore, if periodic automatic or manual adjustments are made to the CEMS zero and calibration settings, conduct the CD test immediately before these adjustments, or conduct it in such a way that the CD can be determined.

Conduct the CD test at the two points specified in Section 4.1. Introduce to the CEMS the reference gases, gas cells, or optical filters (these need not be certified). Record the CEMS response and subtract this value from the reference value (see example data sheet in Figure 2–1).

7. *Relative Accuracy Test Procedure*

7.1 Sampling Strategy for RM Tests. Conduct the RM tests in such a way that they will yield results representative of the emissions from the source and can be correlated to the CEMS data. Although it is preferable to conduct the diluent (if applicable), moisture (if needed), and pollutant measurements simultaneously, the diluent and moisture measurements that are taken within a 30- to 60-minute period, which includes the pollutant measurements, may be used to calculate dry pollutant concentration and emission rate.

In order to correlate the CEMS and RM data properly, mark the beginning and end of each RM test period of each run (including the exact time of the day) on the CEMS chart recordings or other permanent record of output. Use the following strategies for the RM tests:

7.1.1 For integrated samples, e.g., Method 6 and Method 4, make a sample traverse of at least 21 minutes, sampling for 7 minutes at each traverse point.

7.1.2 For grab samples, e.g., Method 7, take one sample at each traverse point, scheduling the grab samples so that they are taken simultaneously (within a 3-minute period) or are an equal interval of time apart over a 21-minute (or less) period. A test run for grab samples must be made up of at least three separate measurements.

NOTE: At times, CEMS RA tests are conducted during new source performance standards performance tests. In these cases, RM

results obtained during CEMS RA tests may be used to determine compliance as long as the source and test conditions are consistent with the applicable regulations.

7.2 Correlation of RM and CEMS Data. Correlate the CEMS and the RM test data as to the time and duration by first determining from the CEMS final output (the one used for reporting) the integrated average pollutant concentration or emission rate for each pollutant RM test period. Consider system response time, if important, and confirm that the pair of results are on a consistent moisture, temperature, and diluent concentration basis. Then, compare each integrated CEMS value against the corresponding average RM value. Use the following guidelines to make these comparisons.

7.2.1 If the RM has an integrated sampling technique, make a direct comparison of the RM results and CEMS integrated average value.

7.2.2 If the RM has a grab sampling technique, first average the results from all grab samples taken during the test run and then compare this average value against the integrated value obtained from the CEMS chart recording or output during the run. If the pollutant concentration is varying with time over the run, the tester may choose to use the arithmetic average of the CEMS value recorded at the time of each grab sample.

7.3 Number of RM Tests. Conduct a minimum of nine sets of all necessary RM tests. Conduct each set within a period of 30 to 60 minutes.

NOTE: The tester may choose to perform more than nine sets of RM tests. If this option is chosen, the tester may, at his discretion, reject a maximum of three sets of the test results so long as the total number of test results used to determine the RA is greater than or equal to nine, but he must report all data including the rejected data.

7.4 Reference Methods. Unless otherwise specified in an applicable subpart of the regulations, Methods 3B, 4, 6, and 7, or their approved alternatives, are the reference methods for diluent (O_2 and CO_2), moisture, SO_2, and NO_x, respectively.

7.5 Calculations. Summarize the results on a data sheet. An example is shown in Figure 2–2. Calculate the mean of the RM values. Calculate the arithmetic differences between the RM and the CEMS output sets. Then calculate the mean of the difference, standard deviation, confidence coefficient, and CEMS RA, using Equations 2–1, 2–2, 2–3, and 2–4.

8. *Equations*

8.1 Arithmetic Mean. Calculate the arithmetic mean of the difference, d, of a data set as follows:

$$\bar{d} = \frac{1}{n}\sum_{i=1}^{n} d_i \qquad \text{(Eq. 2–1)}$$

Where:

n=Number of data points.

$\sum_{i=1}^{n} d_i$ = Algebraic sum of the individual differences d_i.

When the mean of the differences of pairs of data is calculated, be sure to correct the data for moisture, if applicable.

8.2 Standard Deviation. Calculate the standard deviation, S_d, as follows:

$$S_d = \left[\frac{\sum_{i=1}^{n} d_i^2 - \frac{\left(\sum_{i=1}^{n} d_i\right)^2}{n}}{n-1}\right]^{1/2} \qquad \text{(Eq. 2–2)}$$

8.3 Confidence Coefficient. Calculate the 2.5 percent error confidence coefficient (one-tailed), CC, as follows:

$$CC = t_{0.975}\frac{S_d}{\sqrt{n}} \qquad \text{Eq. 2–3}$$

Where:

$t_{0.975}$=t-value (see Table 2–1)

TABLE 2–1— T-VALUES

n^a	$t_{0.975}$	n^a	$t_{0.975}$	n^a	$t_{0.975}$
2	12.706	7	2.447	12	2.201
3	4.303	8	2.365	13	2.179
4	3.182	9	2.306	14	2.160
5	2.776	10	2.262	15	2.145
6	2.571	11	2.228	16	2.131

[a] The values in this table are already corrected for n-1 degrees of freedom. Use n equal to the number of individual values.

8.4 Relative Accuracy. Calculate the RA of a set of data as follows:

$$RA = \frac{|\bar{d}| + |CC|}{\overline{RM}} \times 100 \qquad \text{(Eq. 2–4)}$$

Where:

$|\bar{d}|$=Absolute value of the mean of differences (from Equation 2–1).

|CC|=Absolute value of the confidence coefficient (from Equation 2–3).

RM=Average RM value or applicable standard.

9. *Reporting*

At a minimum (check with the appropriate regional office, or State, or local agency for additional requirements, if any) summarize in tabular form the results of the CD tests and the relative accuracy tests or alternative RA procedure as appropriate. Include all data sheets, calculations, charts (records

of CEMS responses), cylinder gas concentration certifications, and calibration cell response certifications (if applicable), necessary to substantiate that the performance of the CEMS met the performance specifications.

10. *Alternative Procedures*

10.1 Alternative to Relative Accuracy Procedure in section 7. Paragraphs 60.13(j) (1) and (2) contain criteria for which the reference method relative accuracy may be waived and the following procedure substituted.

10.1.1 Conduct a complete CEMS status check following the manufacturer's written instructions. The check should include operation of the light source, signal receiver, timing mechanism functions, data acquisition and data reduction functions, data recorders, mechanically operated functions (mirror movements, zero pipe operation, calibration gas valve operations, etc.), sample filters, sample line heaters, moisture traps, and other related functions of the CEMS, as applicable. All parts of the CEMS shall be functioning properly before proceeding to the alternative RA procedure.

10.1.2 Challenge each monitor (both pollutant and diluent, if applicable) with cylinder gases of known concentrations or calibration cells that produce known responses at two measurement points within the following ranges:

MEASUREMENT RANGE

Measurement point	Pollutant monitor	Diluent monitor for	
		CO_2	O_2
1	20–30 percent of span value.	5–8 percent by volume.	4–6 percent by volume.
2	50–60 percent of span value.	10–14 percent by volume.	8–12 percent by volume.

Use a separate cylinder gas or calibration cell for measurement points 1 and 2. Challenge the CEMS and record the responses three times at each measurement point. Do not dilute gas from a cylinder when challenging the CEMS. Use the average of the three responses in determining relative accuracy.

Operate each monitor in its normal sampling mode as nearly as possible. When using cylinder gases, pass the cylinder gas through all filters, scrubbers, conditioners, and other monitor components used during normal sampling and as much of the sampling probe as practical. When using calibration cells, the CEMS components used in the normal sampling mode should not be by-passed during the RA determination. These include light sources, lenses, detectors, and reference cells. The CEMS should be challenged at each measurement point for a sufficient period of time to assure adsorption-desorption reactions on the CEMS surfaces have stabilized.

Use cylinder gases that have been certified by comparison to National Bureau of Standards (NBS) gaseous standard reference material (SRM) or NBS/EPA-approved gas manufacturer's certified reference material (CRM) (See Citation 2 in the Bibliography) following EPA traceability protocol Number 1 (See Citation 3 in the Bibliography). As an alternative to protocol Number 1 gases, CRM's may be used directly as alternative RA cylinder gases. A list of gas manufacturers that have prepared approved CRM's is available from EPA at the address shown in Citation 2. Procedures for preparation of CRM are described in Citation 2.

Use calibration cells certified by the manufacturer to produce a known response in the CEMS. The cell certification procedure shall include determination of CEMS response produced by the calibration cell in direct comparison with measurement of gases of known concentration. This can be accomplished using SRM or CRM gases in a laboratory source simulator or through extended tests using reference methods at the CEMS location in the exhaust stack. These procedures are discussed in Citation 4 in the Bibliography. The calibration cell certification procedure is subject to approval of the Administrator.

10.1.3 The differences between the known concentrations of the cylinder gases and the concentrations indicated by the CEMS are used to assess the accuracy of the CEMS.

The calculations and limits of acceptable relative accuracy (RA) are as follows:

(a) For pollutant CEMS:

$$RA = \left| \frac{d}{AC} \times 100 \right| \leq 15 \text{ percent}$$

Where:

d=Difference between response and the known concentration/response.

AC=The known concentration/response of the cylinder gas or calibration cell.

(b) For diluent CEMS:

RA=|d| ≤ 0.7 percent O_2 or CO_2, as applicable.

NOTE: Waiver of the relative accuracy test in favor of the alternative RA procedure does not preclude the requirements to complete the calibration drift (CD) tests nor any other requirements specified in the applicable regulation(s) for reporting CEMS data and performing CEMS drift checks or audits.

	Day	Date and time	Calibration value	Monitor value	Difference	Percent of span value
Low-level						
High-level						

Figure 2-1. Calibration drift determination.

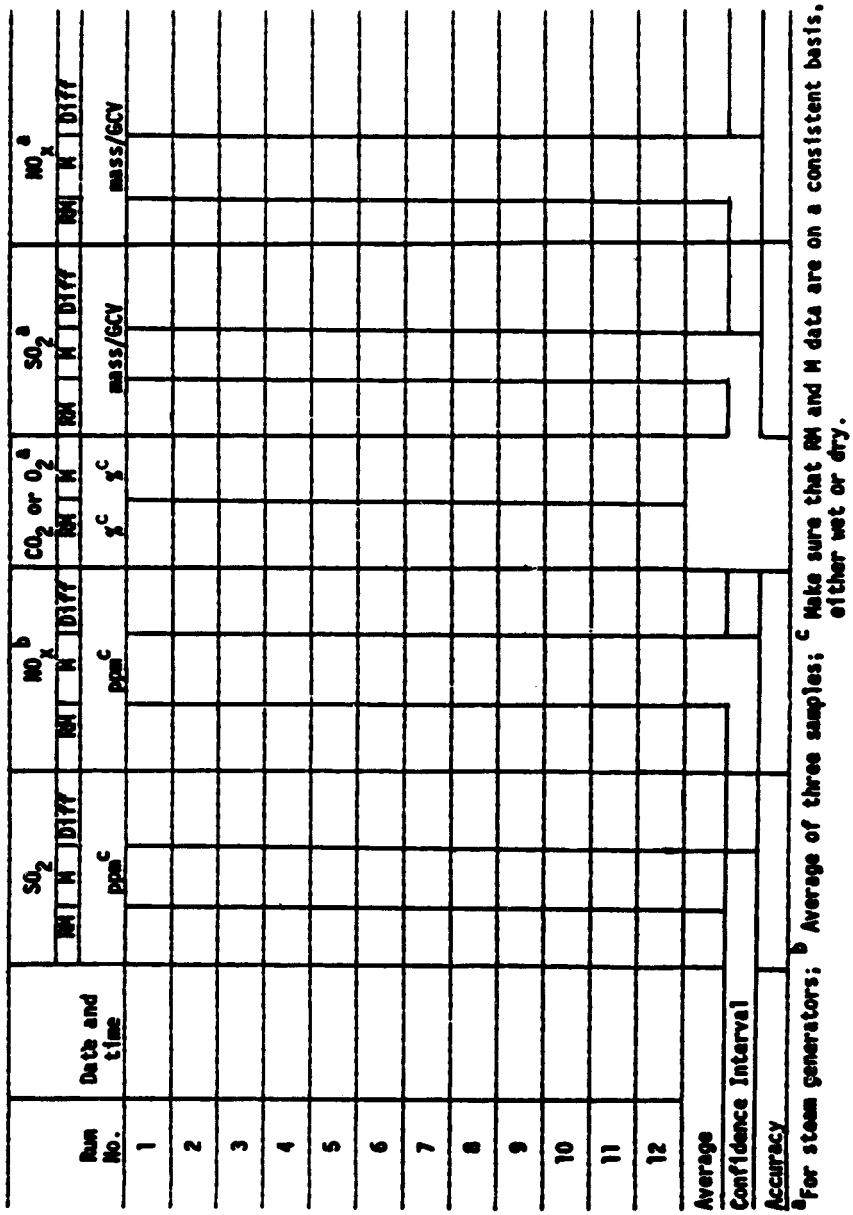

Figure 2-2. Relative accuracy determination.

11. *Bibliography*

1. Department of Commerce. Experimental Statistics. Handbook 91. Washington, DC, p. 3–31, paragraphs 3–3.1.4.

2. "A Procedure for Establishing Traceability of Gas Mixtures to Certain National Bureau of Standards Standard Reference Materials." Joint publication by NBS and EPA. EPA–600/7–81–010. Available from

U.S. Environmental Protection Agency, Quality Assurance Division (MD–77), Research Triangle Park, NC 27711.

3. ''Traceability Protocol for Establishing True Concentrations of Gases Used for Calibration and Audits of Continuous Source Emission Monitors. (Protocol Number 1).'' June 1978. Protocol Number 1 is included in the *Quality Assurance Handbook for Air Pollution Measurement Systems, Volume III, Stationary Source Specific Methods.* EPA–600/4–77–027b. August 1977. Volume III is available from the U.S. EPA, Office of Research and Development Publications, 26 West St. Clair Street, Cincinnati, OH 45268.

4. ''Gaseous Continuous Emission Monitoring Systems—Performance Specification Guidelines for SO_2, NO_x, CO_2, O_2, and TRS.'' EPA–450/3–82–026. Available from U.S. Environmental Protection Agency, Emission Standards and Engineering Division (MD–19), Research Triangle Park, NC 27711.

PERFORMANCE SPECIFICATION 3—SPECIFICATIONS AND TEST PROCEDURES FOR O_2 AND CO_2 CONTINUOUS EMISSION MONITORING SYSTEMS IN STATIONARY SOURCES

1. *Applicability and Principle*

1.1 Applicability. This specification is to be used for evaluating acceptability of O_2 and CO_2 continuous emission monitoring systems (CEM's) at the time of or soon after installation and whenever specified in an applicable subpart of the regulations. The specification applies to O_2 or CO_2 monitors that are not included under Performance Specification 2 (PS 2).

This specification is not designed to evaluate the installed CEMS performance over an extended period of time, nor does it identify specific calibration techniques and other auxiliary procedures to assess the CEMS performance. The source owner or operator, however, is responsible to calibrate, maintain, and operate the CEMS properly. To evaluate the CEMS performance, the Administrator may require, under Section 114 of the Act, the operator to conduct CEMS performance evaluations in addition to the initial test. See Section 60.13(c).

The definitions, installation and measurement location specifications, test procedures, data reduction procedures, reporting requirements, and bibliography are the same as in PS 2, Sections 2, 3, 5, 6, 8, 9, and 10, and also apply to O_2 and CO_2 CEMS's under this specification. The performance and equipment specifications and the relative accuracy (RA) test procedures for O_2 and CO_2 CEMS do not differ from those for SO_2 and NO_x CEMS, except as noted below.

1.2 Principle. Reference method (RM) tests and calibration drift tests are conducted to determine conformance of the CEMS with the specification.

2. *Performance and Equipment Specifications*

2.1 Instrument Zero and Span. This specification is the same as Section 4.1 of PS 2.

2.2 Calibration Drift. The CEMS calibration must not drift by more than 0.5 percent O_2 or CO_2 from the reference value of the gas, gas cell, or optical filter.

2.3 The CEMS RA. The RA of the CEMS must be no greater than 20 percent of the mean value of the RM test data or 1.0 percent O_2 or CO_2, whichever is greater.

3. *Relative Accuracy Test Procedure*

3.1 Sampling Strategy for RM Tests, Correlation of RM and CEMS Data, Number of RM Tests, and Calculations. This is the same as PS 2, Sections 7.1, 7.2, 7.3, and 7.5, respectively.

3.2 Reference Method. Unless otherwise specified in an applicable subpart of the regulations, Method 3B of appendix A or any approved alternative is the RM for O_2 or CO_2.

PERFORMANCE SPECIFICATION 4—SPECIFICATIONS AND TEST PROCEDURES FOR CARBON MONOXIDE CONTINUOUS EMISSION MONITORING SYSTEMS IN STATIONARY SOURCES

1. *Applicability and Principle*

1.1 Applicability. This specification is to be used for evaluating the acceptability of carbon monoxide (CO) continuous emission monitoring systems (CEMS) at the time of or soon after installation and whenever specified in an applicable subpart of the regulations.

This specification is not designed to evaluate the installed CEMS performance over an extended period of time nor does it identify specific calibration techniques and other auxiliary procedures to assess CEMS performance. The source owner or operator, however, is responsible to calibrate, maintain, and operate the CEMS. To evaluate CEMS performance, the Administrator may require, under section 114 of the Act, the source owner or operator to conduct CEMS performance evaluations at other times besides the initial test. See §60.13(c).

The definitions, installation specifications, test procedures, data reduction procedures for determining calibration drifts (CD) and relative accuracy (RA), and reporting of Performance Specification 2 (PS 2), Sections 2, 3, 5, 6, 8, and 9 apply to this specification.

1.2 Principle. Reference method (RM), CD, and RA tests are conducted to determine that the CEMS conforms to the specification.

2. *Performance and Equipment Specifications*

2.1 Instrument Zero and Span. This specification is the same as Section 4.1 of PS 2.

2.2 Calibration Drift. The CEMS calibration must not drift or deviate from the reference value of the calibration gas, gas cell, or optical filter by more than 5 percent of the established span value for 6 out of 7 test

days (e.g., the established span value is 1000 ppm for subpart J affected facilities).

2.3 Relative Accuracy. The RA of the CEMS shall be no greater than 10 percent of the mean value of the RM test data in terms of the units of the emission standard or 5 percent of the applicable standard, whichever is greater.

3. *Relative Accuracy Test Procedure*

3.1 Sampling Strategy for RM Tests, Correlation of RM and CEMS Data, Number of RM Tests, and Calculations. These are the same as PS 2, Sections 7.1, 7.2, 7.3, and 7.5, respectively.

3.2 Reference Methods. Unless otherwise specified in an applicable subpart of the regulation, Method 10 is the RM for this PS. When evaluating nondispersive infrared continuous emission analyzers, Method 10 shall use the alternative interference trap specified in section 10.1 of the method. Method 10A or 10B is an acceptable alternative to method 10.

4. *Bibliography*

1. Ferguson, B.B., R.E. Lester, and W.J. Mitchell. Field Evaluation of Carbon Monoxide and Hydrogen Sulfide Continuous Emission Monitors at an Oil Refinery. U.S. Environmental Protection Agency. Research Triangle Park, NC. Publication No. EPA–600/4–82–054. August 1982. 100 p.

2. Repp, M. Evaluation of Continuous Monitors for Carbon Monoxide in Stationary Sources. U.S. Environmental Protection Agency. Research Triangle Park, NC. Publication No. EPA–600/2–77–063. March 1977/ 155 p.

3. Smith, F., D.E. Wagoner, and R.P. Donovan. Guidelines for Development of a Quality Assurance Program: Volume VIII—Determination of CO Emissions from Stationary Sources by NDIR Spectrometry. U.S. Environmental Protection Agency. Research Triangle Park, NC. Publication No. EPA–650/4–74–005–h. February 1975. 96 p.

PERFORMANCE SPECIFICATION 4A—SPECIFICATIONS AND TEST PROCEDURES FOR CARBON MONOXIDE CONTINUOUS EMISSION MONITORING SYSTEMS IN STATIONARY SOURCES

1. Applicability and Principle

1.1 Applicability.

1.1.1 This specification is to be used for evaluating the acceptability of carbon monoxide (CO) continuous emission monitoring systems (CEMS's) at the time of or soon after installation and whenever specified in an applicable subpart of the regulations.

1.1.2 This specification is not designed to evaluate the installed CEMS performance over an extended period of time nor does it identify specific calibration techniques and other auxiliary procedures to assess CEMS performance. The source owner or operator, however, is responsible to calibrate, maintain, and operate the CEMS. To evaluate CEMS performance, the Administrator may require, under section 114 of the Act, the source owner or operator to conduct CEMS performance evaluations at other times besides the initial test. See §60.13(c).

1.1.3 The definition, installation specifications, test procedures, data reduction procedures for determining calibration drifts (CD) and relative accuracy (RA), and reporting of Performance Specification 2 (PS 2), sections 2, 3, 5, 6, 8, and 9 apply to this specification.

1.2 Principle. Reference method (RM), CD and RA tests are conducted to determine that the CEMS conforms to the specification.

2. Performance and Equipment Specifications

2.1 Data Recorder Scale. This specification is the same as section 4.1 of PS 2. The CEMS shall be capable of measuring emission levels under normal conditions and under periods of short-duration peaks of high concentrations. This dual-range capability may be met using two separate analyzers, one for each range, or by using dual-range units which have the capability of measuring both levels with a single unit. In the latter case, when the reading goes above the full-scale measurement value of the lower range, the higher-range operation shall be started automatically. The CEMS recorder range must include zero and a high-level value.

For the low-range scale, the high-level value shall be between 1.5 times the pollutant concentration corresponding to the emission standard level and the span value. For the high-range scale, the high-level value shall be set at 2000 ppm, as a minimum, and the range shall include the level of the span value. There shall be no concentration gap between the low- and high-range scales.

2.2 Interference Check. The CEMS must be shown to be free from the effects of any interferences.

2.3 Response Time. The CEMS response time shall not exceed 1.5 min to achieve 95 percent of the final stable value.

2.4 Calibration Drift. The CEMS calibration must not drift or deviate from the reference value of the calibration gas, gas cell, or optical filter by more than 5 percent of the established span value for 6 out of 7 test days.

2.5 Relative Accuracy. The RA of the CEMS shall be no greater than 10 percent of the mean value of the RM test data in terms of the units of the emission standard or 5 ppm, whichever is greater. Under conditions where the average CO emissions are less than 10 percent of the standard, a cylinder gas audit may be performed in place of the RA test to determine compliance with these limits. In this case, the cylinder gas shall contain CO in 12 percent carbon dioxide as an interference check. If this option is exercised,

Method 10 must be used to verify that emission levels are less than 10 percent of the standard.

3. Response Time Test Procedure

The response time test applies to all types of CEMS's, but will generally have significance only for extractive systems. The entire system is checked with this procedure including applicable sample extraction and transport, sample conditioning, gas analyses, and data recording.

Introduce zero gas into the system. For extractive systems, the calibration gases should be introduced at the probe as near to the sample location as possible. For in-situ systems, introduce the zero gas at the sample interface so that all components active in the analysis are tested. When the system output has stabilized (no change greater than 1 percent of full scale for 30 sec), switch to monitor stack effluent and wait for a stable value. Record the time (upscale response time) required to reach 95 percent of the final stable value. Next, introduce a high-level calibration gas and repeat the procedure (stabilize, switch the sample, stabilize, record). Repeat the entire procedure three times and determine the mean upscale and downscale response times. The slower or longer of the two means is the system response time.

4. Relative Accuracy Test Procedure

4.1 Sampling Strategy for RM Tests, Correlation of RM and CEMS Data, Number of RM Tests, and Calculations. These are the same as PS 2, sections 7.1, 7.2, 7.3, and 7.5, respectively.

4.2 Reference Methods. Unless otherwise specified in an applicable subpart of the regulation, Method 10 is the RM for this PS. When evaluating nondispersive infrared continuous emission analyzers, Method 10 shall use the alternative interference trap specified in section 10.1 of the method. Method 10A or 10B is an acceptable alternative to Method 10.

5. Bibliography

1. Same as in Performance Specification 4, section 4.

2. ''Gaseous Continuous Emission Monitoring Systems—Performance Specification Guidelines for SO_2, NO_x, CO_2, O_2, and TRS.'' EPA–450/3–82–026. U.S. Environmental Protection Agency, Technical Support Division (MD–19). Research Triangle Park, NC 27711.

PERFORMANCE SPECIFICATION 5—SPECIFICATIONS AND TEST PROCEDURES FOR TRS CONTINUOUS EMISSION MONITORING SYSTEMS IN STATIONARY SOURCES

1. *Applicability and Principle*

1.1 Applicability. This specification is to be used for evaluating the acceptability of total reduced sulfur (TRS) and whenever specified in an applicable subpart of the regulations. (At present, these performance specifications do not apply to petroleum refineries, subpart J.) Sources affected by the promulgation of the specification shall be allowed 1 year beyond the promulgation date to install, operate, and test the CEMS. The CEMS's may include O_2 monitors which are subject to Performance Specification 3 (PS 3).

The definitions, installation specifications, test procedures, and data reduction procedures for determining calibration drifts (CD's) and relative accuracy (RA), and reporting of PS 2, Sections 2, 3, 4, 5, 6, 8, and 9 also apply to this specification and must be consulted. The performance and equipment specifications do not differ from PS 2 except as listed below and are included in this specification.

1.2 Principle. The CD and RA tests are conducted to determine conformance of the CEMS with the specification.

2. *Performance and Equipment Specifications*

2.1 Instrument Zero and Span. The CEMS recorder span must be set at 90 to 100 percent of recorder full-scale using a span level between 1.5 times the pollutant concentration corresponding to the emission standard level and the span value. The CEMS design shall also allow the determination of calibration at the zero level of the calibration curve. If zero calibration is not possible or is impractical, this determination may be conducted at a low level (up to 20 percent of span value) point. The components of an acceptable permeation tube system are listed on pages 87–94 of Citation 4.2 of the Bibliography.

2.2 Calibration Drift. The CEMS detector calibration must not drift or deviate from the reference value of the calibration gas by more than 5 percent (1.5 ppm) of the established span value of 30 ppm for 6 out of 7 test days. If the CEMS includes pollutant and diluent monitors, the CD must be determined separately for each in terms of concentrations (see PS 3 for the diluent specifications).

2.3 The CEMS Relative Accuracy. The RA of the CEMS shall be no greater than 20 percent of the mean value of the reference method (RM) test data in terms of the units of the emission standard or 10 percent of the applicable standard, whichever is greater.

3. *Relative Accuracy Test Procedure*

3.1 Sampling Strategy for RM Tests, Correlation of RM and CEMS Data, Number of RM Tests, and Calculations. This is the same as PS 2, Sections 7.1, 7.2, 7.3, and 7.5, respectively. Note: For Method 16, a sample is made up of at least three separate injects equally spaced over time. For Method 16A, a sample is collected for at least 1 hour.

3.2 Reference Methods. Unless otherwise specified in an applicable subpart of the regulations, Method 16, Method 16A, or other approved alternative, shall be the RM for TRS.

4. *Bibliography*

1. Department of Commerce. Experimental Statistics. National Bureau of Standards. Handbook 91. 1963. Paragraphs 3–3.1.4, p. 3–31.

2. A Guide to the Design, Maintenance and Operation of TRS Monitoring Systems. National Council for Air and Stream Improvement Technical Bulletin No. 89. September 1977.

3. Observation of Field Performance of TRS Monitors on a Kraft Recovery Furnace. National Council for Air and Stream Improvement Technical Bulletin No. 91. January 1978.

PERFORMANCE SPECIFICATION 6—SPECIFICATIONS AND TEST PROCEDURES FOR CONTINUOUS EMISSION RATE MONITORING SYSTEMS IN STATIONARY SOURCES

1. Applicability and Principle

1.1 Applicability. The applicability for this specification is the same as Section 1.1 of Performance Specification 2 (PS 2), except this specification is to be used for evaluating the acceptability of continuous emission rate monitoring systems (CERMS's). The installation and measurement location specifications, performance specification test procedure, data reduction procedures, and reporting requirements of PS 2, Section 3, 5, 8, and 9, apply to this specification.

1.2 Principle. Reference method (RM), calibration drift (CD), and relative accuracy (RA) tests are conducted to determine that the CERMS conforms to the specification.

2. Definitions

The definitions are the same as in Section 2 of PS 2, except that this specification refers to the continuous emission rate monitoring system rather than the continuous emission monitoring system. The following definitions are added:

2.1 Continuous Emission Rate Monitoring System (CERMS). The total equipment required for the determination and recording of the pollutant mass emission rate (in terms of mass per unit of time).

2.2 Flow Rate Sensor. That portion of the CERMS that senses the volumetric flow rate and generates an output proportional to flow rate. The flow rate sensor shall have provisions to check the CD for each flow rate parameter that it measures individually (e.g., velocity pressure).

3. Performance and Equipment Specifications

3.1 Data Recorder Scale. Same as Section 4.1 of PS 2.

3.2 CD. Since the CERMS includes analyzers for several measurements, the CD shall be determined separately for each analyzer in terms of its specific measurement. The calibration for each analyzer used for the measurement of flow rate except a temperature analyzer shall not drift or deviate from either of its reference values by more than 3 percent of 1.25 times the average potential absolute value for that measurement. For a temperature analyzer, the specification is 1.5 percent of 1.25 times the average potential absolute temperature. The CD specification for each analyzer for which other PS's have been established (e.g., PS 2 for SO_2 and NO_x), shall be the same as in the applicable PS.

3.3 CERMS RA. The RA of the CERMS shall be no greater than 20 percent of the mean value of the RM's test data in terms of the units of the emission standard, or 10 percent of the applicable standard, whichever is greater.

4. CD Test Procedure

The CD measurements are to verify the ability of the CERMS to conform to the established CERMS calibrations used for determining the emission rate. Therefore, if periodic automatic or manual adjustments are made to the CERMS zero and calibration settings, conduct the CD tests immediately before these adjustments, or conduct them in such a way what CD can be determined.

Conduct the CD tests for pollutant concentration at the two values specified in Section 4.1 of PS 2. For each of the other parameters that are selectively measured by the CERMS (e.g., velocity pressure), use two analogous values: one that represents zero to 20 percent of the high-level value (a value that is between 1.25 and 2 times the average potential value) for that parameter, and one that represents 50 to 100 percent of the high-level value. Introduce, or activate internally, the reference signals to the CERMS (these need not be certified). Record the CERMS response to each, and subtract this value from the respective reference value (see example data sheet in Figure 6–1).

5. RA Test Procedure

5.1 Sampling Strategy for RM's Tests, Correlation of RM and CERMS Data, Number of RM's Tests, and Calculations. These are the same as PS 2, Sections 7.1, 7.2, 7.3, and 7.5, respectively. Summarize the results on a data sheet. An example is shown in Figure 6–2. The RA test may be conducted during the CD test period.

5.2 Reference Methods (RM's). Unless otherwise specified in the applicable subpart of the regulations, the RM for the pollutant gas is the appendix A method that is cited for compliance test purposes, or its approved alternatives. Methods 2, 2A, 2B, 2C, or 2D, as

applicable are the RM's for the determination of volumetric flow rate.

6. Bibliography

1. Brooks, E.F., E.C. Beder, C.A. Flegal, D.J. Luciani, and R. Williams. Continuous Measurement of Total Gas Flow Rate from Stationary Sources. U.S. Envionmental Protection Agency. Research Triangle Park, NC. Publication No. EPA–650/2–75–020. February 1975. 248 p.

PERFORMANCE SPECIFICATION 7—SPECIFICATIONS AND TEST PROCEDURES FOR HYDROGEN SULFIDE CONTINUOUS EMISSION MONITORING SYSTEMS IN STATIONARY SOURCES

1. Applicability and Principle

1.1 *Applicability.* 1.1.1 This specification is to be used for evaluating the acceptability of hydrogen sulfide (H_2S) continuous emission monitoring systems (CEMS's) at the time of or soon after installation and whenever specified in an applicable subpart of the regulations.

1.1.2 This specification is not designed to evaluate the installed CEMS performance over an extended period of time nor does it identify specific calibration techniques and other auxiliary procedures to assess CEMS performance. The source owner or operator, however, is responsible to calibrate, maintain, and operate the CEMS. To evaluate CEMS performance, the Administrator may require, under Section 114 of the Act, the source owner or operator to conduct CEMS performance evaluations at other times besides the initial test. *See* §60.13(c).

1.1.3 The definitions, installation specifications, test procedures, data reduction procedures for determining calibration drifts (CD) and relative accuracy (RA), and reporting of Performance Specification 2 (PS 2), Sections 2, 3, 5, 6, 8, and 9 apply to this specification.

1.2 Principle. Reference method (RM), CD, and RA tests are conducted to determine that the CEMS conforms to the specification.

2. Performance and Equipment Specifications

2.1 *Instrument zero and span.* This specification is the same as Section 4.1 of PS 2.

2.2 *Calibration drift.* The CEMS calibration must not drift or deviate from the reference value of the calibration gas or reference source by more than 5 percent of the established span value for 6 out of 7 test days (e.g., the established span value is 300 ppm for subpart J fuel gas combustion devices).

2.3 *Relative accuracy.* The RA of the CEMS shall be no greater than 20 percent of the mean value of the RM test data in terms of the units of the emission standard or 10 percent of the applicable standard, whichever is greater.

3. Relative Accuracy Test Procedure

3.1 Sampling Strategy for RM Tests, Correlation of RM and CEMS Data Number of RM Tests, and Calculations. These are the same as that in PS 2, §7.1, 7.2, 7.3, and 7.5, respectively.

3.2 Reference Methods. Unless otherwise specified in an applicable subpart of the regulation, Method 11 is the RM for this PS.

4. Bibliography

1. U.S. Environmental Protection Agency. Standards of Performance for New Stationary Sources; Appendix B; Performance Specifications 2 and 3 for SO_2, NO_x, CO_2, and O_2 Continuous Emission Monitoring Systems; Final Rule. 48 CFR 23608. Washington, DC, U.S. Government Printing Office. May 25, 1983.

2. U.S. Government Printing Office. Gaseous Continuous Emission Monitoring Systems—Performance Specification Guidelines for SO_2, NO_x, CO_2, O_2, and TRS. U.S. Environmental Protection Agency. Washington, DC, EPA–450/3–82–026. October 1982. 26p.

3. Maines, G.D., W.C. Kelly (Scott Environmental Technology, Inc.), and J.B. Homolya. Evaluation of Monitors for Measuring H_2S in Refinery Gas. Prepared for the U.S. Environmental Protection Agency. Research Triangle Park, NC, Contract No. 68–02–2707. 1978. 60 p.

4. Ferguson, B.B., R.E. Lester (Harmon Engineering and Testing), and W.J. Mitchell. Field Evaluation of Carbon Monoxide and Hydrogen Sulfide Continuous Emission Monitors at an Oil Refinery. Prepared for the U.S. Environmental Protection Agency. Research Triangle Park, NC. Publication No. EPA–600/4–82–054. August 1982. 100 p.

PERFORMANCE SPECIFICATION 8—PERFORMANCE SPECIFICATIONS FOR VOLATILE ORGANIC COMPOUND CONTINUOUS EMISSION MONITORING SYSTEMS IN STATIONARY SOURCES

1. Applicability and Principle

1.1 Applicability.

1.1.1 This specification is to be used for evaluating a continuous emission monitoring system (CEMS) that measures a mixture of volatile organic compounds (VOC's) and generates a single combined response value. The VOC detection principle may be flame ionization (FI), photoionization (PI), nondispersive infrared absorption (NDIR), or any other detection principle that is appropriate for the VOC species present in the emission gases and that meets this performance specification. The performance specification includes procedures to evaluate the acceptability of the CEMS at the time of or

soon after its installation and whenever specified in emission regulations or permits. This specification is not designed to evaluate the installed CEMS performance over an extended period of time, nor does it identify specific calibration techniques and other auxiliary procedures to assess the CEMS performance. However, it is the responsibility of the source owner or operator, to calibrate, maintain, and operate the CEMS properly. Under section 114 of the Act, the Administrator may require the operator to evaluate the CEMS performance by conducting CEMS performance evaluations in addition to the initial test. See section 60.13(c).

The definitions, installation and measurement location specifications, test procedures, data reduction procedures, reporting requirements, and bibliography are the same as in PS 2, sections 2, 3, 5, 6, 8, 9, and 10, and also apply to VOC CEMS's under this specification. The performance and equipment specifications and the relative accuracy (RA) test procedures for VOC CEMS do not differ from those for SO_2 and NO_x CEMS, except as noted below.

1.1.2 In most emission circumstances, most VOC monitors can provide only a relative measure of the total mass or volume concentration of a mixture of organic gases, rather than an accurate quantification. This problem is removed when an emission standard is based on a total VOC measurement as obtained with a particular detection principle. In those situations where a true mass or volume VOC concentration is needed, the problem can be mitigated by using the VOC CEMS as a relative indicator of total VOC concentration if statistical analysis indicates that a sufficient margin of compliance exists for this approach to be acceptable. Otherwise, consideration can be given to calibrating the CEMS with a mixture of the same VOC's in the same proportions as they actually occur in the measured source. In those circumstances where only one organic species is present in the source, or where equal incremental amounts of each of the organic species present generate equal CEMS responses, the latter choice can be more easily achieved.

1.2 Principle. Calibration drift and relative accuracy tests are conducted to determine the adherence of the CEMS to specifications given for those items. The performance specifications include criteria for installation and measurement location, equipment and performance, and procedures for testing and data reduction.

2. Performance and Equipment Specifications

2.1 VOC CEMS Selection. When possible, select a VOC CEMS with the detection principle of the reference method specified in the regulation or permit (usually either FI, NDIR, or PI). Otherwise, use knowledge of the source process chemistry, previous emission studies, or gas chromatographic analysis of the source gas to select an appropriate VOC CEMS. Exercise extreme caution in choosing and installing any CEMS in an area with the potential for explosive hazards.

2.2 Data Recorder Scale. Same as section 4.1 of PS 2.

2.3 Calibration Drift. The CEMS calibration must not drift by more than 2.5 percent of the span value.

2.4 CEMS Relative Accuracy. Unless stated otherwise in the regulation or permit, the RA of the CEMS must be no greater than 20 percent of the mean value of the reference method (RM) test data in terms of the units of the emission standard, or 10 percent of the applicable standard, whichever is greater.

3. Relative Accuracy Test Procedure

3.1 Sampling Strategy for RM Tests, Correlation of RM and CEMS Data, Number of RM Tests, and Calculations. Follow PS 2, sections 7.1, 7.2, 7.3, and 7.5, respectively.

3.2 Reference Method. Use the method specified in the applicable regulation or permit, or any approved alternative, as the RM.

PERFORMANCE SPECIFICATION 9—SPECIFICATIONS AND TEST PROCEDURES FOR GAS CHROMATOGRAPHIC CONTINUOUS EMISSION MONITORING SYSTEMS IN STATIONARY SOURCES

1. Applicability and Principle

1.1 Applicability. These requirements apply to continuous emission monitoring systems (CEMS) that use gas chromatography (GC) to measure gaseous organic compound emissions. The requirements include procedures intended to evaluate the acceptability of the CEMS at the time of its installation and whenever specified in regulations or permits. Quality assurance procedures for calibrating, maintaining, and operating the CEMS properly at all times are also given in this procedure.

1.2 Principle. Calibration precision, calibration error, and performance audit tests are conducted to determine conformance of the CEMS with these specifications. Daily calibration and maintenance requirements are also specified.

2. Definitions

2.1 Gas Chromatograph (GC). That portion of the system that separates and detects organic analytes and generates an output proportional to the gas concentration. The GC must be temperature controlled.

NOTE: The term ''temperature controlled'' refers to the ability to maintain a certain temperature around the column. Temperature-programmable GC is not required for this performance specification, as long as all other requirements for precision, linearity,

and accuracy listed in this performance specification are met. It should be noted that temperature programming a GC will speed up peak elution, thus allowing increased sampling frequency.

2.1.1 Column. An analytical column capable of separating the analytes of interest.

2.1.2 Detector. A detection system capable of detecting and quantifying all analytes of interest.

2.1.3 Integrator. That portion of the system that quantifies the area under a particular sample peak generated by the GC.

2.1.4 Data Recorder. A strip chart recorder, computer, or digital recorder capable of recording all readings within the instrument's calibration range.

2.2 Calibration Precision. The error between triplicate injections of each calibration standard.

3. Installation and Measurement Location Specifications

Install the CEMS in a location where the measurements are representative of the source emissions. Consider other factors, such as ease of access for calibration and maintenance purposes. The location should not be close to air in-leakages. The sampling location should be at least two equivalent duct diameters downstream from the nearest control device, point of pollutant generation, or other point at which a change in the pollutant concentration or emission rate occurs. The location should be at least 0.5 diameter upstream from the exhaust or control device. To calculate equivalent duct diameter, see section 2.1 of Method 1 (40 CFR part 60, appendix A). Sampling locations not conforming to the requirements in this section may be used if necessary upon approval of the Administrator.

4. CEMS Performance and Equipment Specifications

4.1 Presurvey Sample Analysis and GC Selection. Determine the pollutants to be monitored from the applicable regulation or permit and determine the approximate concentration of each pollutant (this information can be based on past compliance test results). Select an appropriate GC configuration to measure the organic compounds. The GC components should include a heated sample injection loop (or other sample introduction systems), separatory column, temperature-controlled oven, and detector. If the source chooses dual column and/or dual detector configurations, each column/detector is considered a separate instrument for the purpose of this performance specification and thus the procedures in this performance specification shall be carried out on each system. If this method is applied in highly explosive areas, caution should be exercised in selecting the equipment and method of installation.

4.2 Sampling System. The sampling system shall be heat traced and maintained at a minimum of 120 °C with no cold spots. All system components shall be heated, including the probe, calibration valve, sample lines, sampling loop (or sample introduction system), GC oven, and the detector block (when appropriate for the type of detector being utilized, e.g., flame ionization detector).

4.3 Calibration Gases. Obtain three concentrations of calibration gases certified by the manufacturer to be accurate to within 2 percent of the value on the label. A gas dilution system may be used to prepare the calibration gases from a high concentration certified standard if the gas dilution system meets the requirements specified in Test Method 205, 40 CFR part 51, appendix M. The performance test specified in Test Method 205 shall be repeated quarterly, and the results of the Method 205 test shall be included in the report. The calibration gas concentration of each target analyte shall be as follows (measured concentration is based on the presurvey concentration determined in section 4.1).

NOTE: If the low level calibration gas concentration falls at or below the limit of detection for the instrument for any target pollutant, a calibration gas with a concentration at 4 to 5 times the limit of detection for the instrument may be substituted for the low-level calibration gas listed in section 4.3.1

4.3.1 Low-level. 40–60 percent of measured concentration.

4.3.2 Mid-level. 90–110 percent of measured concentration.

4.3.3 High-level. 140–160 percent of measured concentration, or select highest expected concentration.

4.4 Performance Audit Gas. A certified EPA audit gas shall be used, when possible. A Protocol 1 gas mixture containing all the target compounds within the calibration range may be used when EPA performance audit materials are not available. The instrument relative error shall be ≤10 percent of the certified value of the audit gas.

4.5 Calibration Error (CE). The CEMS must allow the determination of CE at all three calibration levels. The average CEMS calibration response must not differ by more than 10 percent of calibration gas value at each level after each 24-hour period of the initial test.

4.6 Calibration Precision and Linearity. For each triplicate injection at each concentration level for each target analyte, any one injection shall not deviate more than 5 percent from the average concentration measured at that level. The linear regression curve for each organic compound at all three

levels shall have an $r^2 \geq 0.995$ (using Equation 1).

4.7 Measurement Frequency. The sample to be analyzed shall flow continuously through the sampling system. The sampling system time constant (T) shall be ≤5 minutes or the sampling frequency specified in the applicable regulation, whichever is less. Use Equation 3 to determine T. The analytical system shall be capable of measuring the effluent stream at the frequency specified in the appropriate regulation or permit.

5. Performance Specification Test (PST) Periods

5.1 Pretest Preparation Period. Using the procedures described in Method 18 (40 CFR part 60, appendix A), perform initial tests to determine GC conditions that provide good resolution and minimum analysis time for compounds of interest. Resolution interferences that may occur can be eliminated by appropriate GC column and detector choice or by shifting the retention times through changes in the column flow rate and the use of temperature programming.

5.2 7-Day CE Test Period. At the beginning of each 24-hour period, set the initial instrument setpoints by conducting a multipoint calibration for each compound. The multipoint calibration shall meet the requirements in section 4.7. Throughout the 24-hour period, sample and analyze the stack gas at the sampling intervals prescribed in the regulation or permit. At the end of the 24-hour period, inject the three calibration gases for each compound in triplicate and determine the average instrument response. Determine the CE for each pollutant at each level using the equation in section 6.2. Each CE shall be ≤10 percent. Repeat this procedure six more times for a total of 7 consecutive days.

5.3 Performance Audit Test Periods. Conduct the performance audit once during the initial 7-day CE test and quarterly thereafter. Sample and analyze the EPA audit gas(es) (or the Protocol 1 gas mixture if an EPA audit gas is not available) three times. Calculate the average instrument response. Report the audit results as part of the reporting requirements in the appropriate regulation or permit (if using a Protocol 1 gas mixture, report the certified cylinder concentration of each pollutant).

6. Equations

6.1 Coefficient of Determination. Calculate r^2 using linear regression analysis and the average concentrations obtained at three calibration points as shown in Equation 1.

$$r^2 = \left(\frac{n\Sigma x_i y_i - \left(\Sigma x_i\right)\left(\Sigma y_i\right)}{\sqrt{\left(n\Sigma y_i{}^2 - \Sigma y_i \Sigma y_i\right)\left(n\Sigma x_i{}^2 - \Sigma x_i \Sigma x_i\right)}} \right)^2 \qquad \text{Eq. 1}$$

Where:

r^2=Coefficient of determination.

n=Number of measurement points.

x=CEMS response.

y=Actual value of calibration standard.

6.2 Calibration Error Determination. Determine the percent calibration error (CE) at each concentration for each pollutant using the following equation.

$$CE = \frac{C_m - C_a}{C_a} \times 100 \qquad \text{(Eq. 2)}$$

where:

C_m=average instrument response, ppm.

C_a=cylinder gas value, ppm.

6.3 Sampling System Time Constant (T).

$$T = \frac{F}{V} \qquad \text{(Eq. 3)}$$

where:

F=Flow rate of stack gas through sampling system, in liters/min.

V=Sample system volume, in Liters, which is the volume inside the sample probe and tubing leading from the stack to the sampling loop.

7. Daily Calibration

7.1 Initial Multipoint Calibration. After initial startup of the GC, after routine maintenance or repair, or at least once per month, conduct a multipoint calibration of the GC for each target analyte. The multipoint calibration for each analyte shall meet the requirements in section 4.7.

7.2 Daily Calibration. Once every 24 hours, analyze the mid-level calibration standard for each analyte in triplicate. Calculate the average instrument response for each analyte. The average instrument response shall not vary more than 10 percent from the certified concentration value of the cylinder for each analyte. If the difference between the analyzer response and the cylinder concentration for any target compound is greater than 10 percent, immediately take corrective action on the instrument if necessary, and conduct an initial multipoint calibration as described in section 7.1.

8. Reporting

Follow the reporting requirements of the applicable regulation or permit. If the reporting requirements include the results of this performance specification, summarize in tabular form the results of the CE tests. Include all data sheets, calculations, CEMS data records, performance audit results, and calibration gas concentrations and certifications.

[48 FR 13327, Mar. 30, 1983 and 48 FR 23611, May 25, 1983, as amended at 48 FR 32986, July 20, 1983; 51 FR 31701, Aug. 5, 1985; 52 FR 17556, May 11, 1987; 52 FR 30675, Aug. 18, 1987; 52 FR 34650, Sept. 14, 1987; 53 FR 7515, Mar. 9, 1988; 53 FR 41335, Oct. 21, 1988; 55 FR 18876, May 7, 1990; 55 FR 40178, Oct. 2, 1990; 55 FR 47474, Nov. 14, 1990; 56 FR 5526, Feb. 11, 1991; 59 FR 64593, Dec. 15, 1994]

APPENDIX C TO PART 60—DETERMINATION OF EMISSION RATE CHANGE

1. *Introduction.*

1.1 The following method shall be used to determine whether a physical or operational change to an existing facility resulted in an increase in the emission rate to the atmosphere. The method used is the Student's *t* test, commonly used to make inferences from small samples.

2. *Data.*

2.1 Each emission test shall consist of *n* runs (usually three) which produce *n* emission rates. Thus two sets of emission rates are generated, one before and one after the change, the two sets being of equal size.

2.2 When using manual emission tests, except as provided in §60.8(b) of this part, the reference methods of appendix A to this part shall be used in accordance with the procedures specified in the applicable subpart both before and after the change to obtain the data.

2.3 When using continuous monitors, the facility shall be operated as if a manual emission test were being performed. Valid data using the averaging time which would be required if a manual emission test were being conducted shall be used.

3. *Procedure.*

3.1 Subscripts a and b denote prechange and postchange respectively.

3.2 Calculate the arithmetic mean emission rate, E, for each set of data using Equation 1.

$$E = \sum_{i=1}^{n} \frac{E_i}{n} = \frac{E_1 + E_2 \ldots + E_n}{n} \qquad (1)$$

Where:

E_i=Emission rate for the *i* th run.

n=number of runs.

3.3 Calculate the sample variance, S^2, for each set of data using Equation 2.

$$S^2 = \frac{\sum_{i=1}^{n} (E_i - E)^2}{n-1} = \frac{\sum_{i=1}^{n} E_i^2 - \left(\sum_{i=1}^{n} E_i\right)^2 / n}{n-1} \qquad (2)$$

3.4 Calculate the pooled estimate, S_p, using Equation 3.

$$S_p = \left[\frac{(n_a - 1)\, S_a^2 + (n_b - 1)\, S_b^2}{n_a + n_b - 2}\right]^{1/2} \qquad (3)$$

3.5 Calculate the test statistic, *t*, using Equation 4.

$$t = \frac{E_b - E_a}{S_p \left[\frac{1}{n_a} + \frac{1}{n_b}\right]^{1/2}} \qquad (4)$$

4. *Results.*

4.1 If $E_b > E_a$ and $t > t'$, where t' is the critical value of *t* obtained from Table 1, then with 95% confidence the difference between E_b and E_a is significant, and an increase in emission rate to the atmosphere has occurred.

TABLE 1

Degrees of freedom ($n_a = n_b - 2$)	t' (95 percent confidence level)
2	2.920
3	2.353
4	2.132

TABLE 1—Continued

Degrees of freedom ($n_a=n_b-2$)	t' (95 percent confidence level)
5	2.015
6	1.943
7	1.895
8	1.860

For greater than 8 degrees of freedom, see any standard statistical handbook or text.

5.1 Assume the two performance tests produced the following set of data:

Test a	Test b
Run 1. 100	115
Run 2. 95	120
Run 3. 110	125

5.2 Using Equation 1—

$E_a=100+95+110/3=102$

$E_b=115+120+125/3=120$

5.3 Using Equation 2—

$$S_a2=(100-102)^2+(95-102)^2+(110-102)^2/3-1=58.5$$

$$S_b2=(115-120)^2+(120-120)^2+(125-120)^2/3-1=25$$

5.4 Using Equation 3—

$$S_p=[(3-1)(58.5)+(3+1)(25)/3+3-2]^{1/2}=6.46$$

5.5 Using Equation 4—

$$t=\frac{120-102}{6.46\left[\frac{1}{3}+\frac{1}{3}\right]^{1/2}}=3.412$$

5.6 Since $(n^1+n^2-2)=4$, $t'=2.132$ (from Table 1). Thus since $t>t'$ the difference in the values of E_a and E_b is significant, and there has been an increase in emission rate to the atmosphere.

6. *Continuous Monitoring Data.*

6.1 Hourly averages from continuous monitoring devices, where available, should be used as data points and the above procedure followed.

[40 FR 58420, Dec. 16, 1975]

APPENDIX D TO PART 60—REQUIRED EMISSION INVENTORY INFORMATION

(a) Completed NEDS point source form(s) for the entire plant containing the designated facility, including information on the applicable criteria pollutants. If data concerning the plant are already in NEDS, only that information must be submitted which is necessary to update the existing NEDS record for that plant. Plant and point identification codes for NEDS records shall correspond to those previously assigned in NEDS; for plants not in NEDS, these codes shall be obtained from the appropriate Regional Office.

(b) Accompanying the basic NEDS information shall be the following information on each designated facility:

(1) The state and county identification codes, as well as the complete plant and point identification codes of the designated facility in NEDS. (The codes are needed to match these data with the NEDS data.)

(2) A description of the designated facility including, where appropriate:

(i) Process name.

(ii) Description and quantity of each product (maximum per hour and average per year).

(iii) Description and quantity of raw materials handled for each product (maximum per hour and average per year).

(iv) Types of fuels burned, quantities and characteristics (maximum and average quantities per hour, average per year).

(v) Description and quantity of solid wastes generated (per year) and method of disposal.

(3) A description of the air pollution control equipment in use or proposed to control the designated pollutant, including:

(i) Verbal description of equipment.

(ii) Optimum control efficiency, in percent. This shall be a combined efficiency when more than one device operates in series. The method of control efficiency determination shall be indicated (e.g., design efficiency, measured efficiency, estimated efficiency).

(iii) Annual average control efficiency, in percent, taking into account control equipment down time. This shall be a combined efficiency when more than one device operates in series.

(4) An estimate of the designated pollutant emissions from the designated facility (maximum per hour and average per year). The method of emission determination shall also be specified (e.g., stack test, material balance, emission factor).

[40 FR 53349, Nov. 17, 1975]

APPENDIX E TO PART 60 [RESERVED]

APPENDIX F TO PART 60—QUALITY ASSURANCE PROCEDURES

PROCEDURE 1. QUALITY ASSURANCE REQUIREMENTS FOR GAS CONTINUOUS EMISSION MONITORING SYSTEMS USED FOR COMPLIANCE DETERMINATION

1. Applicability and Principle

1.1 Applicability. Procedure 1 is used to evaluate the effectiveness of quality control (QC) and quality assurance (QA) procedures and the quality of data produced by any continuous emission monitoring system (CEMS) that is used for determining compliance with the emission standards on a continuous basis as specified in the applicable regulation. The CEMS may include pollutant (e.g., SO_2 and NO_x) and diluent (e.g., O_2 or CO_2) monitors.

This procedure specifies the minimum QA requirements necessary for the control and assessment of the quality of CEMS data submitted to the Environmental Protection Agency (EPA). Source owners and operators responsible for one or more CEMS's used for compliance monitoring must meet these minimum requirements and are encouraged to develop and implement a more extensive QA program or to continue such programs where they already exist.

Data collected as a result of QA and QC measures required in this procedure are to be submitted to the Agency. These data are to be used by both the Agency and the CEMS operator in assessing the effectiveness of the CEMS QC and QA procedures in the maintenance of acceptable CEMS operation and valid emission data.

Appendix F, Procedure 1 is applicable December 4, 1987. The first CEMS accuracy assessment shall be a relative accuracy test audit (RATA) (see section 5) and shall be completed by March 4, 1988 or the date of the initial performance test required by the applicable regulation, whichever is later.

1.2 Principle. The QA procedures consist of two distinct and equally important functions. One function is the assessment of the quality of the CEMS data by estimating accuracy. The other function is the control and improvement of the quality of the CEMS data by implementing QC policies and corrective actions. These two functions form a control loop: When the assessment function indicates that the data quality is inadequate, the control effort must be increased until the data quality is acceptable. In order to provide uniformity in the assessment and reporting of data quality, this procedure explicitly specifies the assessment methods for response drift and accuracy. The methods are based on procedures included in the applicable performance specifications (PS's) in appendix B of 40 CFR part 60. Procedure 1 also requires the analysis of the EPA audit samples concurrent with certain reference method (RM) analyses as specified in the applicable RM's.

Because the control and corrective action function encompasses a variety of policies, specifications, standards, and corrective measures, this procedure treats QC requirements in general terms to allow each source owner or operator to develop a QC system that is most effective and efficient for the circumstances.

2. Definitions

2.1 Continuous Emission Monitoring System. The total equipment required for the determination of a gas concentration or emission rate.

2.2 Diluent Gas. A major gaseous constituent in a gaseous pollutant mixture. For combustion sources, CO_2 and O_2 are the major gaseous constituents of interest.

2.3 Span Value. The upper limit of a gas concentration measurement range that is specified for affected source categories in the applicable subpart of the regulation.

2.4 Zero, Low-Level, and High-Level Values. The CEMS response values related to the source specific span value. Determination of zero, low-level, and high-level values is defined in the appropriate PS in appendix B of this part.

2.5 Calibration Drift (CD). The difference in the CEMS output reading from a reference value after a period of operation during which no unscheduled maintenance, repair or adjustment took place. The reference value may be supplied by a cylinder gas, gas cell, or optical filter and need not be certified.

2.6 Relative Accuracy (RA). The absolute mean difference between the gas concentration or emission rate determined by the CEMS and the value determined by the RM's plus the 2.5 percent error confidence coefficient of a series of tests divided by the mean of the RM tests or the applicable emission limit.

3. QC Requirements

Each source owner or operator must develop and implement a QC program. As a minimum, each QC program must include written procedures which should describe in detail, complete, step-by-step procedures and operations for each of the following activities:

1. Calibration of CEMS.
2. CD determination and adjustment of CEMS.
3. Preventive maintenance of CEMS (including spare parts inventory).
4. Data recording, calculations, and reporting.
5. Accuracy audit procedures including sampling and analysis methods.
6. Program of corrective action for malfunctioning CEMS.

As described in Section 5.2, whenever excessive inaccuracies occur for two consecutive quarters, the source owner or operator must revise the current written procedures or modify or replace the CEMS to correct the deficiency causing the excessive inaccuracies.

These written procedures must be kept on record and available for inspection by the enforcement agency.

4. CD Assessment

4.1 CD Requirement. As described in 40 CFR 60.13(d), source owners and operators of CEMS must check, record, and quantify the CD at two concentration values at least once daily (approximately 24 hours) in accordance with the method prescribed by the manufacturer. The CEMS calibration must, as minimum, be adjusted whenever the daily zero (or low-level) CD or the daily high-level CD exceeds two times the limits of the applicable PS's in appendix B of this regulation.

4.2 Recording Requirement for Automatic CD Adjusting Monitors. Monitors that automatically adjust the data to the corrected calibration values (e.g., microprocessor control) must be programmed to record the unadjusted concentration measured in the CD prior to resetting the calibration, if performed, or record the amount of adjustment.

4.3 Criteria for Excessive CD. If either the zero (or low-level) or high-level CD result exceeds twice the applicable drift specification in appendix B for five, consecutive, daily periods, the CEMS is out-of-control. If either the zero (or low-level) or high-level CD result exceeds four times the applicable drift specification in appendix B during any CD check, the CEMS is out-of-control. If the CEMS is out-of-control, take necessary corrective action. Following corrective action, repeat the CD checks.

4.3.1 Out-Of-Control Period Definition. The beginning of the out-of-control period is the time corresponding to the completion of the fifth, consecutive, daily CD check with a CD in excess of two times the allowable limit, or the time corresponding to the completion of the daily CD check preceding the daily CD check that results in a CD in excess of four times the allowable limit. The end of the out-of-control period is the time corresponding to the completion of the CD check following corrective action that results in the CD's at both the zero (or low-level) and high-level measurement points being within the corresponding allowable CD limit (i.e., either two times or four times the allowable limit in appendix B).

4.3.2 CEMS Data Status During Out-of-Control Period. During the period the CEMS is out-of-control, the CEMS data may not be used in calculating emission compliance nor be counted towards meeting minimum data availability as required and described in the applicable subpart [e.g., §60.47a(f)].

4.4 Data Recording and Reporting. As required in §60.7(d) of this regulation (40 CFR part 60), all measurements from the CEMS must be retained on file by the source owner for at least 2 years. However, emission data obtained on each successive day while the CEMS is out-of-control may not be included as part of the minimum daily data requirement of the applicable subpart [e.g., §60.47a(f)] nor be used in the calculation of reported emissions for that period.

5. Data Accuracy Assessment

5.1 Auditing Requirements. Each CEMS must be audited at least once each calendar quarter. Successive quarterly audits shall occur no closer than 2 months. The audits shall be conducted as follows:

5.1.1 Relative Accuracy Test Audit (RATA). The RATA must be conducted at least once every four calendar quarters. Conduct the RATA as described for the RA test procedure in the applicable PS in appendix B (e.g., PS 2 for SO_2 and NO_x). In addition, analyze the appropriate performance audit samples received from EPA as described in the applicable sampling methods (e.g., Methods 6 and 7).

5.1.2 Cylinder Gas Audit (CGA). If applicable, a CGA may be conducted in three of four calendar quarters, but in no more than three quarters in succession.

To conduct a CGA: (1) Challenge the CEMS (both pollutant and diluent portions of the CEMS, if applicable) with an audit gas of known concentration at two points within the following ranges:

Audit point	Audit range		
	Pollutant monitors	Diluent monitors for—	
		CO_2	O_2
1	20 to 30% of span value.	5 to 8% by volume.	4 to 6% by volume.
2	50 to 60% of span value.	10 to 14% by volume.	8 to 12% by volume.

Challenge the CEMS three times at each audit point, and use the average of the three responses in determining accuracy.

Use of separate audit gas cylinder for audit points 1 and 2. Do not dilute gas from audit cylinder when challenging the CEMS.

The monitor should be challenged at each audit point for a sufficient period of time to assure adsorption-desorption of the CEMS sample transport surfaces has stabilized.

(2) Operate each monitor in its normal sampling mode, i.e., pass the audit gas through all filters, scrubbers, conditioners, and other monitor components used during normal sampling, and as much of the sampling probe as is practical. At a minimum, the audit gas should be introduced at the connection between the probe and the sample line.

(3) Use audit gases that have been certified by comparision to National Bureau of Standards (NBS) gaseous Standard Reference Materials (SRM's) or NBS/EPA approved gas manufacturer's Certified Reference Materials (CRM's) (See Citation 1) following EPA Traceability Protocol No. 1 (See Citation 2). As an alternative to Protocol No. 1 audit gases, CRM's may be used directly as audit gases. A list of gas manufacturers that have prepared approved CRM's is available from EPA at the address shown in Citation 1. Procedures for preparation of CRM's are described in Citation 1. Procedures for preparation of EPA Traceability Protocol 1 materials are described in Citation 2.

The difference between the actual concentration of the audit gas and the concentration indicated by the monitor is used to assess the accuracy of the CEMS.

5.1.3 Relative Accuracy Audit (RAA). The RAA may be conducted three of four calendar quarters, but in no more than three quarters in succession. To conduct a RAA,

follow the procedure described in the applicable PS in appendix B for the relative accuracy test, except that only three sets of measurement data are required. Analyses of EPA performance audit samples are also required.

The relative difference between the mean of the RM values and the mean of the CEMS responses will be used to assess the accuracy of the CEMS.

5.1.4 Other Alternative Audits. Other alternative audit procedures may be used as approved by the Administrator for three of four calendar quarters. One RATA is required at least once every four calendar quarters.

5.2 Excessive Audit Inaccuracy. If the RA, using the RATA, CGA, or RAA exceeds the criteria in section 5.2.3, the CEMS is out-of-control. If the CEMS is out-of-control, take necessary corrective action to eliminate the problem. Following corrective action, the source owner or operator must audit the CEMS with a RATA, CGA, or RAA to determine if the CEMS is operating within the specifications. A RATA must always be used following an out-of-control period resulting from a RATA. The audit following corrective action does not require analysis of EPA performance audit samples. If audit results show the CEMS to be out-of-control, the CEMS operator shall report both the audit showing the CEMS to be out-of-control and the results of the audit following corrective action showing the CEMS to be operating within specifications.

5.2.1 Out-Of-Control Period Definition. The beginning of the out-of-control period is the time corresponding to the completion of the sampling for the RATA, RAA, or CGA. The end of the out-of-control period is the time corresponding to the completion of the sampling of the subsequent successful audit.

5.2.2 CEMS Data Status During Out-Of-Control Period. During the period the monitor is out-of-control, the CEMS data may not be used in calculating emission compliance nor be counted towards meeting minimum data availabilty as required and described in the applicable subpart [e.g., §60.47a(f)].

5.2.3 Criteria for Excessive Audit Inaccuracy. Unless specified otherwise in the applicable subpart, the criteria for excessive inaccuracy are:

(1) For the RATA, the allowable RA in the applicable PS in appendix B.

(2) For the CGA, ±15 percent of the average audit value or ±5 ppm, whichever is greater.

(3) For the RAA, ±15 percent of the three run average or ±7.5 percent of the applicable standard, whichever is greater.

5.3 Criteria for Acceptable QC Procedure. Repeated excessive inaccuracies (i.e., out-of-control conditions resulting from the quarterly audits) indicates the QC procedures are inadequate or that the CEMS is incapable of providing quality data. Therefore, whenever excessive inaccuracies occur for two consective quarters, the source owner or operator must revise the QC procedures (see Section 3) or modify or replace the CEMS.

6. *Calculations for CEMS Data Accuracy*

6.1 RATA RA Calculation. Follow the equations described in Section 8 of appendix B, PS 2 to calculate the RA for the RATA. The RATA must be calculated in units of the applicable emission standard (e.g., ng/J).

6.2 RAA Accuracy Calculation. Use Equation 1–1 to calculate the accuracy for the RAA. The RAA must be calculated in units of the applicable emission standard (e.g., ng/J).

6.3 CGA Accuracy Calculation. Use Equation 1–1 to calculate the accuracy for the CGA, which is calculated in units of the appropriate concentration (e.g., ppm SO_2 or percent O_2). Each component of the CEMS must meet the acceptable accuracy requirement.

$$A = \frac{C_m - C_a}{C_a} \times 100 \qquad \text{Eq. 1-1}$$

where:

A = Accuracy of the CEMS, percent.

C_m = Average CEMS response during audit in units of applicable standard or appropriate concentration.

C_a = Average audit value (CGA certified value or three-run average for RAA) in units of applicable standard or appropriate concentration.

6.4 Example Accuracy Calculations. Example calculations for the RATA, RAA, and CGA are available in Citation 3.

7. *Reporting Requirements*

At the reporting interval specified in the applicable regulation, report for each CEMS the accuracy results from Section 6 and the CD assessment results from Section 4. Report the drift and accuracy information as a Data Assessment Report (DAR), and include one copy of this DAR for each quarterly audit with the report of emissions required under the applicable subparts of this part.

As a minimum, the DAR must contain the following information:

1. Source owner or operator name and address.

2. Identification and location of monitors in the CEMS.

3. Manufacturer and model number of each monitor in the CEMS.

4. Assessment of CEMS data accuracy and date of assessment as determined by a RATA, RAA, or CGA described in Section 5 including the RA for the RATA, the A for the RAA or CGA, the RM results, the cylinder gases certified values, the CEMS responses, and the calculations results as defined in Section 6. If the accuracy audit results show the CEMS to be out-of-control, the CEMS operator shall report both the audit results

showing the CEMS to be out-of-control and the results of the audit following corrective action showing the CEMS to be operating within specifications.

5. Results from EPA performance audit samples described in Section 5 and the applicable RM's.

6. Summary of all corrective actions taken when CEMS was determined out-of-control, as described in Sections 4 and 5.

An example of a DAR format is shown in Figure 1.

8. *Bibliography*

1. ''A Procedure for Establishing Traceability of Gas Mixtures to Certain National Bureau of Standards Standard Reference Materials.'' Joint publication by NBS and EPA–600/7–81–010. Available from the U.S. Environmental Protection Agency. Quality Assurance Division (MD–77). Research Triangle Park, NC 27711.

2. ''Traceability Protocol for Establishing True Concentrations of Gases Used for Calibration and Audits of Continuous Source Emission Monitors (Protocol Number 1)'' June 1978. Section 3.0.4 of the Quality Assurance Handbook for Air Pollution Measurement Systems. Volume III. Stationary Source Specific Methods. EPA–600/4–77–027b. August 1977. U.S. Environmental Protection Agency. Office of Research and Development Publications, 26 West St. Clair Street, Cincinnati, OH 45268.

3. Calculation and Interpretation of Accuracy for Continuous Emission Monitoring Systems (CEMS). Section 3.0.7 of the Quality Assurance Handbook for Air Pollution Measurement Systems, Volume III, Stationary Source Specific Methods. EPA–600/4–77–027b. August 1977. U.S. Environmental Protection Agency. Office of Research and Development Publications, 26 West St. Clair Street, Cincinnati, OH 45268.

FIGURE 1—EXAMPLE FORMAT FOR DATA ASSESSMENT REPORT

Period ending date
Year
Company name
Plant name
Source unit no.
CEMS manufacturer
Model no.
CEMS serial no.
CEMS type (e.g., in situ)
CEMS sampling location (e.g., control device outlet)
CEMS span values as per the applicable regulation: (e.g., SO_2 ppm, NO_x ppm).

I. Accuracy assessment results (Complete A, B, or C below for each CEMS or for each pollutant and diluent analyzer, as applicable.) If the quarterly audit results show the CEMS to be out-of-control, report the results of both the quarterly audit and the audit following corrective action showing the CEMS to be operating properly.

A. Relative accuracy test audit (RATA) for (e.g., SO_2 in ng/J).

1. Date of audit .
2. Reference methods (RM's) used (e.g., Methods 3 and 6).
3. Average RM value (e.g., ng/J, mg/dsm^3, or percent volume).
4. Average CEMS value .
5. Absolute value of mean difference [d] .
6. Confidence coefficient [CC] .
7. Percent relative accuracy (RA) percent.
8. EPA performance audit results:
a. Audit lot number (1) (2)
b. Audit sample number (1) (2)
c. Results (mg/dsm^3) (1) (2)
d. Actual value (mg/dsm^3)* (1) (2)
e. Relative error* (1) (2)

B. Cylinder gas audit (CGA) for (e.g., SO_2 in ppm).

	Audit point 1	Audit point 2	
1. Date of audit	.....	.....	
2. Cylinder ID number	.....	.....	
3. Date of certification	.....	.....	
4. Type of certification	.....	.....	(e.g., EPA Protocol 1 or CRM).
5. Certified audit value	.....	.....	(e.g., ppm).
6. CEMS response value	.....	.....	(e.g., ppm).
7. Accuracy	.....	.....	percent.

C. Relative accuracy audit (RAA) for (e.g., SO_2 in ng/J).

1. Date of audit .
2. Reference methods (RM's) used (e.g., Methods 3 and 6).
3. Average RM value (e.g., ng/J).
4. Average CEMS value .
5. Accuracy percent.
6. EPA performance audit results:
a. Audit lot number (1) (2)
b. Audit sample number (1) (2)
c. Results (mg/dsm^3) (1) (2)
d. Actual value (mg/dsm^3) *(1) (2)
e. Relative error* (1) (2)

D. Corrective action for excessive inaccuracy.

1. Out-of-control periods.
a. Date(s) .
b. Number of days .
2. Corrective action taken
3. Results of audit following corrective action. (Use format of A, B, or C above, as applicable.)

*To be completed by the Agency.

II. Calibration drift assessment.

A. Out-of-control periods.

1. Date(s) .

2. Number of days .

B. Corrective action taken

—

[52 FR 21008, June 4, 1987; 52 FR 27612, July 22, 1987, as amended at 56 FR 5527, Feb. 11, 1991]

APPENDIX G TO PART 60—PROVISIONS FOR AN ALTERNATIVE METHOD OF DEMONSTRATING COMPLIANCE WITH 40 CFR 60.43 FOR THE NEWTON POWER STATION OF CENTRAL ILLINOIS PUBLIC SERVICE COMPANY

1. *Designation of Affected Facilities*

1.1 The affected facilities to which this alternative compliance method applies are the Unit 1 and 2 coal-fired steam generating units located at the Central Illinois Public Service Company's (CIPS) Newton Power Station in Jasper County, Illinois. Each of these units is subject to the Standards of Performance for Fossil-Fuel-Fired Steam Generators for Which Construction Commenced After August 17, 1971 (subpart D).

2. *Definitions*

2.1 All definitions in subparts D and Da of part 60 apply to this provision except that:

24-hour period means the period of time between 12:00 midnight and the following midnight.

Boiler operating day means a 24-hour period during which any fossil is combusted in either the Unit 1 or Unit 2 steam generating unit and during which the provisions of §60.43(e) are applicable.

CEMs means continuous emission monitoring system.

Coal bunker means a single or group of coal trailers, hoppers, silos or other containers that:

(1) are physically attached to the affected facility; and

(2) provide coal to the coal pulverizers.

DAFGDS means the dual alkali flue gas desulfurization system for the Newton Unit 1 steam generating unit.

3. *Compliance Provisions*

3.1 If the owner or operator of the affected facility elects to comply with the 470 ng/J (1.1 lbs/MMBTU) of combined heat input emission limit under §60.43(e), he shall notify the Regional Administrator, of the United States Environmental Protection Agency (USEPA), Region 5 and the Director, of the Illinois Environmental Protection Agency (IEPA) at least 30 days in advance of the date such election is to take effect, stating the date such operation is to commence. When the owner or operator elects to comply with this limit after one or more periods of reverting to the 520 ng/J heat input (1.2 lbs/MMBTU) limit of §60.43(a)(2), as provided under 3.4, he shall notify the Regional Administrator of the USEPA, Region 5 and the Director of the (IEPA) in writing at least ten (10) days in advance of the date such election is to take effect.

3.2 Compliance with the sulfur dioxide emission limit under §60.43(e) is determined on a continuous basis by performance testing using CEMs. Within 60 days after the initial operation of Units 1 and 2 subject to the combined emission limit in §60.43(e), the owner or operator shall conduct an initial performance test, as required by §60.8, to determine compliance with the combined emission limit. This initial performance test is to be scheduled so that the thirtieth boiler operating day of the 30 successive boiler operating days is completed within 60 days after initial operation subject to the 470 ng/J (1.1 lbs/MMBTU) combined emission limit. Following the initial performance test, a separate performance test is completed at the end of each boiler operating day Unit 1 and Unit 2 are subject to §60.43(e), and a new 30 day average emission rate calculated.

3.2.1 Following the initial performance test, a new 30 day average emission rate is calculated for each boiler operating day the affected facility is subject to §60.43(e). If the owner or operator of the affected facility elects to comply with §60.43(e) after one or more periods of reverting to the 520 ng/J heat input (1.2 lbs/MMBTU) limit under §60.43(a)(2), as provided under 3.4, the 30 day average emission rate under §60.43(e) is calculated using emissions data of the current boiler operating day and data for the previous 29 boiler operating days when the affected facility was subject to §60.43(e). Periods of operation of the affected facility under §60.43(a)(2) are not considered boiler operating days. Emissions data collected during operation under §60.43(a)(2) are not considered relative to 4.6 and emissions data are not included in calculations of emission under §60.43(e).

3.2.2 When the affected facility is operated under the provisions of §60.43(e), the Unit 1 DAFGDS bypass damper must be fully closed. The DAFGDS bypass may be opened only during periods of DAFGDS startup, shutdown, malfunction or testing as described under Sections 3.5.1, 3.5.2, 3.5.3, 3.5.4, and 4.8.2.

3.3 Compliance with the sulfur dioxide emission limit set forth in §60.43(e) is based on the average combined hourly emission rate from Units 1 and 2 for 30 successive boiler operating days determined as follows:

$$E30 = \frac{1}{n}\sum_{i=1}^{n} EC(i)$$

where:

n=the number of available hourly combined emission rate values in the 30 successive boiler operating day period where Unit 1 and Unit 2 are subject to §60.43(e).

E30=average emission rate for 30 successive boiler operating days where Unit 1 and Unit 2 are subject to §60.43(e).

EC=the hourly combined emission rate from Units 1 and 2, in ng/J or lbs/MMBTU.

3.3.1 The average hourly combined emission rate for Units 1 and 2for each hour of operation of either Unit 1 or 2, or both, is determined as follows:

EC=[(E1)+(E2)]/[H1+H2]

where:

EC=the hourly combined SO_2 emission rate, lbs/MMBTU, from Units 1 and 2 when Units 1 and 2 are subject to §60.43(e).

E1=the hourly SO_2 mass emission, lb/hr, from Unit 1 as determined from CEMs data using the calculation procedures in section 4 of this appendix.

E2=the hourly SO_2 mass emission, lb/hr, from Unit 2 as determined from CEMs data using the calculation procedures in section 4 of this appendix.

H1=the hourly heat input, MMBTU/HR to Unit 1 as determined in section 4 of this appendix.

H2=the hourly heat input, MMBTU/HR, to Unit 2 as determined by section 4 of this appendix.

3.3.2 If data for any of the four hourly parameters (E1, E2, H1and H2, under 3.3.1 are unavailable during an hourly period, the combined emission rate (EC) is not calculated and the period is counted as missing data under 4.6.1., except as provided under 3.5. and 4.4.2.

3.4 After the date of initial operation subject to the combined emission limit, Units 1 and 2 shall remain subject to the combined emission limit and the owner or operator shall remain subject to the requirements of this Appendix until the initial performance test as required by 3.2 is completed and the owner or operator of the affected facility elects and provides notice to revert on a certain date to the 520 ng/J heat input (1.2 lbs/MMBTU) limit of §60.43(a)(2) applicable separately at each unit. The Regional Administrator of the USEPA, Region 5 and the Director, of the IEPA shall be given written notification from CIPS as soon as possible of CIPs' decision to revert to the 520 ng/J heat input (1.2 lbs/MMBTU) limit of §60.43(a)(2) separately at each unit, but no later than 10 days in advance of the date such election is to take effect.

3.5 Emission monitoring data for Unit 1 may be excluded from calculations of the 30 day rolling average only during the following times:

3.5.1 Periods of DAFGDS startup.

3.5.2 Periods of DAFGDS shutdown.

3.5.3 Periods of DAFGDS malfunction during system emergencies as defined in §60.41a.

3.5.4 The first 250 hours per calendar year of DAFGDS malfunctions of Unit 1 DAFGDS provided that efforts are made to minimize emissions from Unit 1 in accordance with §60.11(d), and if, after 16 hours but not more than 24 hours of DAFGDS malfunction, the owner or operator of the affected facility begins (following the customary loading procedures) loading into the Unit 1 coal bunker, coal with a potential SO_2 emission rate equal to or less than the emission rate of Unit 2 recorded at the beginning of the DAFGDS malfunction. Malfunction periods under 3.5.3 are not counted toward the 250 hour/yr limit under this section.

3.5.4.1 The malfunction exemption in 3.5.4 is limited to the first 250 hours per calendar year of DAFGDS malfunction.

3.5.4.2 For malfunctions of the DAFGDS after the 250 hours per calendar year limit (cumulative), other than those defined in 3.5.3, the owner or operator of the affected facility shall combust lower sulfur coal or use any other method to comply with the 470 ng/J (1.1 lbs/MMBTU) combined emission limit.

3.5.4.3 During the first 250 hours of DAFGDS malfunction per year or during periods of DAFGDS startup, or DAFGDS shutdown, CEMs emissions data from Unit 2 shall continue to be included in the daily calculation of the combined 30 day rolling average emission rate; that is, the load on Unit 1 is assumed to be zero (H1 and E1=O; EC=E2/H2).

3.5.5—3.5.7 [Reserved]

3.6 The provision for excluding CEMs data from Unit 1 during the first 250 hours of DAFGDS malfunctions from combined hourly emissions calculations supersedes the provisions of §60.11(d). However, the general purpose contained in §60.11(d) (i.e., following good control practices to minimize air pollution emission during malfunctions) has not been superseded.

4. Continuous Emission Monitoring

4.1 The CEMs required under Section 3.2 are operated and data are recorded for all periods of operation of the affected facility including periods of the DAFGDS startup, shutdown and malfunction except for CEMs breakdowns, repairs, calibration checks, and zero and span adjustment. All provisions of §60.45 apply except as follows:

4.2 The owner or operator shall install, calibrate, maintain, and operate CEMs and monitoring devices for measuring the following:

4.2.1 For Unit 1:

4.2.1.1 Sulfur dioxide, oxygen or carbon dioxide, and volumetric flow rate for the Unit 1 DAFGDS stack.

4.2.1.2 Sulfur dioxide, oxygen or carbon dioxide, and volumetric flow rate for the Unit 1 DAFGDS bypass stack.

4.2.1.3 Moisture content of the flue gas must be determined continuously for the Unit 1 DAFGDS stack and the Unit 1 DAFGDS bypass stack, if the sulfur dioxide concentration in each stack is measured on a dry basis.

4.2.2 For Unit 2, sulfur dioxide, oxygen or carbon dioxide, and volumetric flow rate.

4.2.2.1 Moisture content of the flue gas must be determined continuously for the Unit 2 stack, if the sulfur dioxide concentration in the stack is measured on a dry basis.

4.2.3 For Units 1 and 2, the hourly heat input, the hourly steam production rate, or the hourly gross electrical power output from each unit.

4.3 For the Unit 1 bypass stack and the Unit 2 stack, the span value of the sulfur dioxide analyzer shall be equivalent to 200 percent of the maximum estimated hourly potential sulfur dioxide emissions of the fuel fired in parts per million sulfur dioxide. For the Unit 1 DAFGDS stack, the span value of the sulfur dioxide analyzer shall be equivalent to 100 percent of the maximum estimated hourly potential emissions of the fuel fired in parts per million sulfur dioxide. The span value for volumetric flow monitors shall be equivalent to 125 percent of the maximum estimated hourly flow in standard cubic meters/minute (standard cubic feet per minute). The span value of the continuous moisture monitors, if required by 4.2.1.3 and 4.2.2.1, shall be equivalent to 100 percent by volume. The span value of the oxygen or carbon dioxide analyzers shall be equivalent to 25 percent by volume.

4.3.1—4.3.2 [Reserved]

4.4 The monitoring devices required in 4.2 shall be installed, calibrated, and maintained as follows:

4.4.1 Each volumetric flow rate monitoring device specified in 4.2 shall be installed at approximately the same location as the sulfur dioxide emission monitoring sample location.

4.4.2 Hourly steam production rate and hourly electrical power output monitoring devices for Unit 1 and Unit 2 shall be calibrated and maintained according to manufacturer's specifications. The data from either of these devices may be used in the calculation of the combined emission rate in Section 3.3.1, only when the hourly heat input for Unit 1 (H1) or the hourly heat input for Unit 2 (H2) cannot be determined from CEM data, and the hourly heat input to steam production or hourly heat input to electrical power output efficiency over a given segment of each boiler or generator operating range, respectively, varies by less than 5 percent within the specified operating range, or the efficiencies of the boiler/generator units differ by less than 5 percent. The hourly heat input for Unit 1 (H1) or the hourly heat input for Unit 2 (H2) in Section 3.3.1 may also be calculated based on the fuel firing rates and fuel analysis.

4.4.3—4.4.5 [Reserved]

4.5 The hourly mass emissions from Unit 1 (E1) and Unit 2 (E2) and the hourly heat inputs from Unit 1 (H1) and Unit 2 (H2) used to determine the hourly combined emission rate for Units 1 and 2 (EC) in Section 3.3.1 are calculated using CEM data for each respective stack as follows:

4.5.1 The hourly SO_2 mass emission from each respective stack is determined as follows:

$E=(C)\ (F)\ (D)\ (K)$

Where:

E=SO_2 mass emission from the respective stack in lb per hour

C=SO_2 concentration from the respective stack ppm

F=flue gas flow rate from the respective stack in scfm

D=density of SO_2 in lb per standard cubic feet

K=time conversion, 60 mins./hr

4.5.2 The hourly heat input from each respective stack is determined as follows:

$H=[(F)\ (C)\ (K)/(F_c)$

where:

H=heat input from the respective stack in MMBTU per hour

C=CO_2 or O_2 concentration from the respective stack as a decimal

F=flue gas flow rate from the respective stack in scfm

K=time conversion, 60 mins./hr

F_c=fuel constant for the appropriate diluent in scf/MMBTU as per §§60.45(f) (4) and (5)

4.5.3 The hourly SO_2 mass emission for Unit 1 in pounds per hour (E1) is calculated as follows, when leakage or diversion of any DAFGDS inlet gas to the bypass stack occurs:

$E1=(EF)+(EB)$

Where:

EF=Hourly SO_2 mass emission measured in DAFGDS stack, lb/hr, using the calculation in Section 4.5.1.

EB=Hourly SO_2 mass emission measured in bypass stack, lb/hr, using the calculation in Section 4.5.1.

Other than during conditions under 3.5.1, 3.5.2, 3.5.3, 3.5.4, or 4.8.2, the DAFGDS bypass damper must be fully closed and any leakage will be indicated by the bypass stack volumetric flow and SO_2 measurements, and when no leakage through the bypass damper is indicated:

$E1=EF$

4.5.4 The hourly heat input for Unit 1 in MMBTU per hour (H1) is calculated as follows, when leakage or diversion of any DAFGDS inlet gas to the bypass stack occurs:

$H1=(HF)+(HB)$

where:

HF=Hourly heat input as determined from the DAFGDS stack CEMs, in MMBTU per hour, using the calculation in Section 4.5.2

HB=Hourly heat input as determined from the DAFGDS bypass stack CEMs, in MMBTU per hour, using the calculation in Section 4.5.2

4.6 For the CEMs required for Unit 1 and Unit 2, the owner or operator of the affected facility shall maintain and operate the CEMs and obtain combined emission data values (EC) for at least 75 percent of the boiler operting hours per day for at least 26 out of each 30 successive boiler operating days.

4.6.1 When hourly SO_2 emission data are not obtained by the CEMs because of CEMs breakdowns, repairs, calibration checks and zero and span adjustment, hourly emission data required by 4.6 are obtained by using Methods 6 or 6C and 3 or 3A, 6A, or 8 and 3, or by other alternative methods approved by the Regional Administrator of the USEPA, Region 5 and the Director, of the IEPA. Failure to obtain the minimum data requirements of 4.6 by CEMs, or by CEMs supplemented with alternative methods of this section, is a violation of performance testing requirements.

4.6.2 Independent of complying with the minimum data requirements of 4.6, all valid emissions data collected are used to calculate combined hourly emission rates (EC) and 30-day rolling average emission rates (E30) are calculated and used to judge compliance with 60.43(e).

4.7 For each continuous emission monitoring system, a quality control plan shall be prepared by CIPS and submitted to the Regional Administrator of the USEPA, Region 5 and the Director, of the IEPA. The plan is to be submitted to the Regional Administrator of the USEPA, Region 5 and the Director, of the IEPA 45 days before initiation of the initial performance test. At a minimum, the plan shall contain the following quality control elements:

4.7.1 Calibration of continuous emission monitoring systems (CEMs) and volumetric flow measurement devices.

4.7.2 Calibration drift determination and adjustment of CEMs and volumetric flow measurement devices.

4.7.3 Periodic CEMs, volumetric flow measurement devices and relative accuracy determinations.

4.7.4 Preventive maintenance of CEMs and volumetric flow measurement devices (including spare parts inventory).

4.7.5 Data recording and reporting.

4.7.6 Program of corrective action for malfunctioning CEMs and volumetric flow measurement devices.

4.7.7 Criteria for determining when the CEMs and volumetric flow measurement devices are not producing valid data.

4.7.8 Calibration and periodic checks of monitoring devices identified in 4.4.2.

4.8 For the purpose of conducting the continuous emission monitoring system performance specification tests as required by §60.13 and appendix B, the following conditions apply:

4.8.1 The calibration drift specification of Performance Specification 2, appendix B shall be determined separately for each of the Unit 1 SO_2 CEMs and the Unit 2 SO_2 CEMs. The calibration drift specification of Performance Specification 3, appendix B shall be determined separately for each of the Unit 1 diluent CEMs and Unit 2 diluent CEMs.

4.8.2 The relative accuracy of the combined SO_2 emission rate for Unit 1 and Unit 2, as calculated from CEMs and volumetric flow data using the procedures in 3.3.1, 4.5.1, 4.5.2 and 4.5.3 shall be no greater than 20 percent of the mean value of the combined emission rate, as determined from testing conducted simultaneously on the DAFGDS stack, the DAFGDS bypass stack and the Unit 2 stack using reference methods 2, 3, or 3A and 6 or 6C, or shall be no greater than 10 percent of the emission limit in §60.43(e), whichever criteria is less stringent. The relative accuracy shall be computed from at least nine comparisons of the combined emission rate values using the procedures in section 7 and the equations in section 8, Performance Specification 2, appendix B. Throughout, but only during, the relative accuracy test period the DAFGDS bypass damper shall be partially opened such that there is a detectable flow.

4.8.3—4.8.3.4 [Reserved]

4.9 The total monitoring system required by 4.2 shall be subject only to an annual relative accuracy test audit (RATA) in accordance with the quality assurance requirements of section 5.1.1 of 40 CFR part 60, appendix F. Each SO_2 and diluent CEMs shall be subject to cylinder gas audits (OGA) in accordance with the quality assurance requirements of section 5.1.2 of appendix F with the exception that any SO_2 or diluent CEMs without any type of probe or sample line shall be exempt from the OGA requirements.

5. Recordkeeping Requirements

5.1 The plant owner or operator shall keep a record of each hourly emission rate, each hourly SO_2 CEMs value and hourly flow rate value, and each hourly Btu heat input rate, hourly steam rate, or hourly electrical power output, and a record of each hourly weighted average emission rate. These records shall be kept for all periods of operation of Unit 1 or 2 under provisions of §60.43(e), including operations of Unit 1 (E1) during periods of DAFGDS startup, shutdown, and malfunction when H1 and E1 are assumed to be zero (0) (see 4.5).

5.2 The plant owner or operator shall keep a record of each hourly gas flow rate through the DAFGDS stack, each hourly stack gas flow rate through the bypass stack during any periods that the DAFGDS bypass damper is opened or flow is indicated, and reason for bypass operation.

6. Reporting Requirements

6.1 The owner or operator of any affected facility shall submit the written reports required under 6.2 of this section and subpart A to the Regional Administrator of the USEPA, Region 5 and the Director, of the IEPA for every calendar quarter. All quarterly reports shall be submitted by the 30th day following the end of each calendar quarter.

6.2 For sulfur dioxide, the following data resubmitted to the Regional Administrator of the USEPA, Region 5 and the Director, of the IEPA for each 24-hour period:

6.2.1 Calendar date

6.2.2 The combined average sulfur dioxide emission rate (ng/J or lb/million Btu) for the past 30 successive boiler operating days (ending with the last 30-day period in the quarter); and, for any noncompliance periods, reasons for noncompliance with the emission standards and description of corrective action taken.

6.2.3 Identification of the boiler operating days for which valid sulfur dioxide emissions data required by 4.6 have not been obtained for 75 percent of the boiler operating hours; reasons for not obtaining sufficient data; and description of corrective actions taken to prevent recurrence.

6.2.4 Identification of the time periods (hours) when Unit 1 or Unit 2 were operated but combined hourly emission rates (EC) were not calculated because of the unavailability of parameters E1, E2, H1, or H2 as described in 3.2.

6.2.5 Identification of the time periods (hours) when Unit 1 and Unit 2 were operated and where the combined hourly emission rate (EC) equalled Unit 2 (E2/H2) emissions because of the Unit 1 malfunction provisions under 3.5.3, and 3.5.4.

6.2.6 Identification of the time periods (hours) when emissions from the Unit 1 DAFGDS have been excluded from the calculation of average sulfur dioxide emission rates because of Unit 1 DAFGDS startup, shutdown, malfunction, or other reasons; and justification for excluding data for reasons other than startup or shutdown. Reporting of hourly emission rate of Unit 1 (E1/H2) during each hour of the DAFGDS startup, malfunction under 3.5.1, 3.5.2, 3.5.3, and 3.5.4 (see 4.5).

6.2.7 Identification of the number of days in the calendar quarter that the affected facility was operated (any fuel fired).

6.2.8 Identify any periods where Unit 1 DAFGDS malfunctions occurred and the cumulative hours of Unit 1 DAFGDS malfunction for the quarter.

6.2.9 Identify any periods of time that any exhaust gases were discharged to the DAFGDS bypass stack and the hourly gas flow rate through the DAFGDS stack and through the DAFGDS bypass stack during such periods and reason for bypass operation.

6.2.10 [Reserved]

[52 FR 28955, Aug. 4, 1987, as amended at 58 FR 28785, May 17, 1993; 59 FR 8135, Feb. 18, 1994]

APPENDIX H TO PART 60 [RESERVED]

APPENDIX I TO PART 60—REMOVABLE LABEL AND OWNER'S MANUAL

1. Introduction

The purpose of this appendix is to provide guidance to the manufacturer for compliance with the temporary labeling and owner's manual provisions of subpart AAA. Section 2 provides guidance for the content and presentation of information on the temporary labels. Section 3 provides guidance for the contents of the owner's manual.

2. Temporary Labels

2.1 General

Temporary labels shall be printed on 90 pound bond paper and shall measure 5 inches wide by 7 inches long. All labels shall be printed in black ink on one side of the label only. The type font that shall be used for all printing is helvetica. Specific instructions for drafting labels are provided below depending upon the compliance status of the wood heater model. Figures 1 through 7 illustrate the various label types that may apply.

2.2 Certified Wood Heaters

The design and content of certified wood heaters vary according to the following:

- Catalyst or noncatalyst,
- Measured or default thermal efficiency value, and
- Compliance with 1988 or 1990 emission limit.

There are five parts of a label. These include:

- Identification and compliance status,
- Emission value,
- Efficiency value,
- Heat output value, and
- Caveats.

Instructions for drafting each of these five parts are discussed below in terms of the three variables listed above. Figures 1 and 2 illustrate the variations in label design. Figure 1 is a temporary label for a hypothetical catalyst wood heater that meets the 1990 standard, has a certification test emission composite value of 3.5 g/h, and has a default efficiency of 72 percent. The label in Figure

2 is for a hypothetical noncatalyst wood heater with a certification test emission composite value of 7.8 g/h and a measured efficiency of 68 percent. It meets the 1988 but not the 1990 standard. All labels for wood heaters that have been certified and tested should conform as much as possible to the general layout, the type font and type size illustrated in Figures 1 and 2.

2.2.1 Identification and Compliance Status

The top 1.5 inches of the label should contain the following items (and location on the label):

- Manufacturer name (upper left hand corner,
- Model name/number (upper left hand corner,
- The words ''U.S. ENVIRONMENTAL PROTECTION AGENCY'' (centered at top and enclosed in a box with rounded edges),
- For catalytic wood heaters, in large bold print the words ''CATALYST EQUIPPED'' (centered below the words ''U.S. ENVIRONMENTAL PROTECTION AGENCY''),
- Text indicating compliance status for catalytic wood heaters. For those catalytic wood heaters which comply with the 1988 emission limits, but not the 1990 emission limits, the words: ''Meets EPA particulate matter (smoke) control requirements for catalytic wood heaters built on or after July 1, 1988, and before July 1, 1990.'' For those catalytic wood heaters which comply with the 1990 emission limits, the words: ''Meets EPA particulate matter (smoke) control requirements for catalytic wood heaters built on or after July 1, 1990.'' Finally, for all catalytic wood heaters, the following text should be included: ''See catalyst warranty. Illegal to operate when catalyst is not working. See owner's manual for operation and maintenance.''
- Text indicating compliance status for noncatalytic wood heaters. For those noncatalytic wood heaters that comply with the 1988 emission limits but not the 1990 emission limits, the words: ''Meets EPA particulate matter (smoke) control requirements for NONCATALYTIC wood heaters built on or after July 1, 1988, and before July 1, 1990.'' For those noncatalytic wood heaters that comply with 1990 emission limits, the words: ''Meets EPA particulate matter (smoke) control requirements for NONCATALYTIC wood heaters built on or after July 1, 1990.''

2.2.2 Emission Value

Between 1.5 and 3.0 inches down from the top of the label is the part that graphically illustrates the particulate matter, or smoke, emission value. This part consists of the word ''SMOKE'' in large bold print and a 3.0 inch line with words ''(grams per hour)'' centered beneath the line. A blunt end arrow with a base (blunt end) that spans 2 g/hr shall be centered over the point on the emissions line that represents the composite emission value for the model as measured in the certification test.

For catalyst equipped wood heaters the 3.0 inch line shall be labeled ''0'' on the left end of the line (centered below the end) and ''5.5'' on the right end (centered below the end). To find where to center the large blunt end arrow, measure 0.55 inches from the left end for each g/h of the composite emission value. Thus, a 4 g/h value would be 2.2 inches from the left end. The base of the blunt end should always be 1.1 inches wide (2 g/hr). The words ''This Model'' should be centered above or within the blunt end arrow.

For noncatalyst equipped wood heaters, the 3.0 inch line should be labeled ''0'' on the left end of the line (centered below the end) and ''8.5'' on the right end of the line (centered below the end). To find where to center the large blunt end arrow, measure 0.35 inches from the left end for each g/h of the composite emission value. Thus, a 4 g/h value would be 1.4 inches from the left end. The base of the blunt end should always be 0.7 inches wide (2 g/h). The words ''This Model'' should be centered above or within the blunt end arrow.

2.2.3 Efficiency Value

Between 3.0 and 4.75 inches down from the top of the label is the part that illustrates overall thermal efficiency value. The efficiency value may either be a measured value or a calculated or default value as provided in §60.536(i)(3) of the regulation. Regardless of how the efficiency is derived, the words ''EFFICIENCY'' shall be centered above a 4 inch line. The 4 inch line should be divided into 5 equal lengths (each 0.8 inches) and labeled ''50%,'' ''60%,'' * * * ''100%'' as indicated in Figures 1 and 2. As with the smoke line in 2.2.2, a blunt end arrow shall be centered over the point on the line where the efficiency value would be located. The base of the blunt end arrow shall be 0.48 inches wide (6 percentage points). To find where to center the blunt end arrow, measure 0.08 inches for each percentage point to the right of the nearest labeled value. For example, a value of 82 percent would be 0.16 inches to the right of the ''80%'' mark.

For default efficiency values, an asterisk shall follow the word ''EFFICIENCY'' as in Figure 1. The asterisk refers to a note in parentheses that shall say ''Not tested for efficiency. Value indicated is for similar catalyst equipped (or noncatalytic, as appropriate) wood heaters.''

For measured efficiency values measured with the method in appendix J, the words ''Tested Efficiency'' shall be centered above the blunt end arrow as in Figure 2.

The last item required for this part is a sentence that says ''Wood heaters with higher efficiencies cost less to operate.''

2.2.4 Heat Output Value

Between 4.75 and 6.0 inches down from the top of the label is the heat output part. The words ''HEAT OUTPUT'' in large bold print are centered above the Heat Output range numbers in Btu/hr, as derived from the certification test. The words ''Use this to choose the right size appliance for your needs. ASK DEALER FOR HELP'' should follow the heat output range numbers as in Figures 1 and 2. (Note that ''ASK DEALER FOR HELP'' is a single line, centered in the label.) The low end of the burn rate range indicated on the label should reflect the low end of the burn rate range achievable by the wood heater as sold and not as tested in the laboratory (see §60.536(i)(4)).

2.2.5 Caveats

In the lower 0.75 inch of the label, the following text shall be presented:

''This wood heater will achieve low smoke output and high efficiency only if properly operated and maintained. See owner's manual.''

2.3 Coal-Only Heaters

For those heaters which meet the definition of ''coal only heater'' in §60.531, the temporary label should contain the identical material (same layout and print font and size) as that illustrated in Figure 3, except that the hypothetical manufacturer and model name should be replaced with the appropriate actual names.

2.4 Small Manufacturer Exempted Wood Heaters

For those wood heaters exempted under §60.530(d), the small manufacturer exemption, the temporary label should contain the identical material (same layout and print font and size) as that illustrated in Figure 4, except that the hypothetical manufacturer and model name should be replaced with the appropriate actual names.

2.5 Wood Heaters that Are Not Certified

For those wood heaters that do not meet applicable emission limits under §60.532 and are not otherwise exempted, the temporary label should contain the identical material (same layout and print font and size) as those illustrated in Figures 5, 6, and 7, as appropriate. The hypothetical manufacturer and model names should be replaced with the appropriate actual names.

There are three kinds of wood heaters which fall into this category of ''not certified.'' Each requires a separate label. If a wood heater is tested but fails to meet the applicable limits, the label in Figure 5 applies. Such a label should be printed on red rather than white paper. If a wood heater is tested and does meet the emission limit but is not subsequently certified, the label in Figure 6 applies. (An example would be a one-of-a-kind wood heater which is not part of a model line. Because of the costs of testing, this circumstance is not expected to arise often, if at all.) If a wood heater is not tested and is not certified, it should bear the label illustrated in Figure 7. As with Figure 5, this label should be printed on red paper.

3.0 Guidance for Preparation of Wood Heater Owner's Manuals

3.1 Introduction

Although the owner's manuals do not require premarket approval, EPA will monitor the contents to ensure that sufficient information is included to provide heater operation and maintenance information affecting emissions to consumers. The purpose of this section is to provide guidance to manufacturers in complying with the owner's manual provisions of §60.536(1). A checklist of topics and illustrative language is provided as a guideline. Owner's manuals should be tailored to specific wood heater models, as appropriate.

3.2 Topics Required To Be Addressed in Owner's Manual

- Wood heater description and compliance status,
- Tamper warning,
- Catalyst information and warranty (if catalyst equipped),
- Fuel selection,
- Achieving and maintaining catalyst light-off (if catalyst equipped),
- Catalyst monitoring (if catalyst equipped),
- Troubleshooting catalytic equipped heaters (if catalyst equipped),
- Catalyst replacement (if catalyst equipped),
- Wood heater operation and maintenance, and
- Wood heater installation: achieving proper draft.

3.3 Sample Text/Descriptions

The following are example texts and/or further descriptions illustrating the topics identified above. Although the regulation requires manufacturers to address (where applicable) the ten topics identified above, the exact language is not specified. Manuals should be written specific to the model and design of the wood heater. The following guidance is composed of generic descriptions and texts. If manufacturers choose to use the language provided in the example, the portion in italics should be revised as appropriate. Any manufacturer electing to use the EPA example language shall be in compliance with owner's manual requirements provided that the particular language is printed

in full with only such changes as are necessary to ensure accuracy. Example language is not provided for certain topics, since these areas are generally heater specific. For these topics, manufacturers should develop text that is specific to the operation and maintenance of their particular products.

3.3.1 Wood Heater Description and Compliance Status

Owner's Manuals shall include:

A. Manufacturer and model,

B. Compliance status (exempt, 1988 std., 1990 std., etc.), and

C. Heat output range (as indicated on temporary label).

Example Text covering A, B, and C above:

''This manual describes the installation and operation of the *Brand X, Model 0 catalytic equipped* wood heater. This heater meets the U.S. Environmental Protection Agency's emission limits for wood heaters sold *between July 1, 1990, and July 1, 1992.* Under specific test conditions this heater has been shown to deliver heat at rates ranging from *8,000* to *35,000* Btu/hr.''

3.3.2 Tamper Warning

This consists of the following statement which must be included in the owner's manual for catalyst equipped units:

Example Text covering legal prohibition on tampering:

''This wood heater contains a catalytic combustor, which needs periodic inspection and replacement for proper operation. It is against the law to operate this wood heater in a manner inconsistent with operating instructions in this manual, or if the catalytic element is deactivated or removed.''

3.3.3 Catalyst Information

Included with or supplied in the owner's and warranty manuals shall be the following information:

A. Catalyst manufacturer, model,

B. Catalyst warranty details, and

C. Instructions for warranty claims.

Example Text covering A, B, and C:

''The combustor supplied with this heater is a *Brand Z, Long Life Combustor.* Consult the catalytic combustor warranty also supplied with this wood heater. Warranty claims should be addressed to:

Stove or Catalyst Manufacturer
Address
Phone #

This section should also provide clear guidance on how to exercise the warranty (how to package for return shipment, etc.).

3.3.4 Fuel Selection

Owner's manuals shall include:

A. Instructions on acceptable fuels, and

B. Warning against inappropriate fuels.

Example Text covering A and B:

''This heater is designed to burn natural wood only. Higher efficiencies and lower emissions generally result when burning air dried seasoned hardwoods, as compared to softwoods or to green or freshly cut hardwoods.

DO NOT BURN:

- Treated Wood.
- Coal.
- Garbage.
- Cardboard.
- Solvents.
- Colored Paper.
- Trash.

Burning treated wood, garbage, solvents, colored paper or trash may result in release of toxic fumes and may poison or render ineffective the catalytic combustor.

Burning coal, cardboard, or loose paper can produce soot, or large flakes of char or fly ash that can coat the combustor, causing smoke spillage into the room, and rendering the combustor ineffective.''

3.3.5 Achieving and Maintaining Catalyst Light-Off

Owner's manuals shall describe in detail proper procedures for:

A. Operation of catalyst bypass (stove specific),

B. Achieving catalyst light-off from a cold start, and

C. Achieving catalyst light-off when refueling.

No example text is supplied for describing operation of catalyst bypass mechanisms (Item A) since these are typically stove-specific. Manufacturers however must provide instructions specific to their model describing:

1. Bypass position during start-up,

2. Bypass position during normal operation, and

3. Bypass position during reloading.

Example Text for item B:

''The temperature in the stove and the gases entering the combustor must be raised to between *500*° to *700*°F for catalytic activity to be initiated. During the start-up of a cold stove, a medium to high firing rate must be maintained for about *20 minutes. This ensures that the stove, catalyst, and fuel are all stabilized at proper operating temperatures. Even though it is possible to have gas temperatures reach 600* °F within two to three minutes after a fire is started, if the fire is allowed to die down immediately it may go out or the combustor may stop working. Once the combustor starts working, heat generated in it by burning the smoke will keep it working.''

Example Text for item C:

REFUELING:

''During the refueling and rekindling of a cool fire, or a fire that has burned down to the charcoal phase, operate the stove at a

medium to high firing rate for about *10 minutes* to ensure that the catalyst reaches approximately *600* °F.''

3.3.6 Catalyst Monitoring

Owner's manuals shall include:

A. Recommendation to visually inspect combustor at least three times during the heating season,

B. Discussion on expected combustor temperatures for monitor-equipped units, and

C. Suggested monitoring and inspection techniques.

Example Text covering A, B, and C:

''It is important to periodically monitor the operation of the catalytic combustor to ensure that it is functioning properly and to determine when it needs to be replaced. A non-functioning combustor will result in a loss of heating efficiency, and an increase in creosote and emissions. Following is a list of items that should be checked on a periodic basis.

• Combustors should be visually inspected at least three times during the heating season to determine if physical degradation has occurred. Actual removal of the combustor is not recommended unless more detailed inspection is warranted because of decreased performance. If any of these conditions exist, refer to Catalyst Troubleshooting section of this owner's manual.

• This catalytic heater is equipped with a temperature probe to monitor catalyst operation. Properly functioning combustors typically maintain temperatures in excess of *500* °F, and often reach temperatures in excess of *1,000* °F. If catalyst temperatures are not in excess of *500* °F, refer to Catalyst Troubleshooting section of this owner's manual.

• You can get an indication of whether the catalyst is working by comparing the amount of smoke leaving the chimney when the smoke is going through the combustor and catalyst light-off has been achieved, to the amount of smoke leaving the chimney when the smoke is not routed through the combustor (bypass mode).

Step 1—Light stove in accordance with instructions in *3.3.5.*

Step 2—With smoke routed through the catalyst, go outside and observe the emissions leaving the chimney.

Step 3—Engage the bypass mechanism and again observe the emissions leaving the chimney.

Significantly more smoke should be seen when the exhaust is not routed through the combustor (bypass mode). Be careful not to confuse smoke with steam from wet wood.''

3.3.7 Catalyst Troubleshooting

The owner's manual should provide clear descriptions of symptoms and remedies to common combustor problems. It is recommended that photographs of catalyst peeling, plugging, thermal cracking, mechanical cracking, and masking be included in the manual to aid the consumer in identifying problems and to provide direction for corrective action.

3.3.8 Catalyst Replacement

The owner's manual should provide clear step-by-step instructions on how to remove and replace the catalytic combustor. The section should include diagrams and/or photographs.

3.3.9 Wood Heater Operation and Maintenance

Owner's manual shall include:

A. Recommendations about building and maintaining a fire,

B. Instruction on proper use of air controls,

C. Ash removal and disposal,

D. Instruction on gasket replacement, and

E. Warning against overfiring.

No example text is supplied for A, B, and D since these items are model specific. Manufacturers should provide detailed instructions on building and maintaining a fire including selection of fuel pieces, fuel quantity, and stacking arrangement. Manufacturers should also provide instruction on proper air settings (both primary and secondary) for attaining minimum and maximum heat outputs and any special instructions for operating thermostatic controls. Step-by-step instructions on inspection and replacement of gaskets should also be included. Manufacturers should provide diagrams and/or photographs to assist the consumer. Gasket type and size should be specified.

Example Text for item C:

''Whenever ashes get *3 to 4 inches* deep in your firebox or ash pan, and when the fire has burned down and cooled, remove excess ashes. Leave an ash bed approximately *1 inch* deep on the firebox bottom to help maintain a hot charcoal bed.''

''Ashes should be placed in a metal container with a tight-fitting lid. The closed container of ashes should be placed on a noncombustible floor or on the ground, away from all combustible materials, pending final disposal. The ashes should be retained in the closed container until all cinders have thoroughly cooled.''

Example Text covering item E:

''DO NOT OVERFIRE THIS HEATER''

''Attempts to achieve heat output rates that exceed heater design specifications can result in permanent damage to the heater and to the catalytic combustor if so equipped.''

3.3.10 Wood Heater Installation: Achieving Proper Draft

Owner's manual shall include:

A. Importance of proper draft,

B. Conditions indicating inadequate draft, and

C. Conditions indicating excessive draft.

Example Text for Item A:

''Draft is the force which moves air from the appliance up through the chimney. The amount of draft in your chimney depends on the length of the chimney, local geography, nearby obstructions, and other factors. Too much draft may cause excessive temperatures in the appliance *and may damage the catalytic combustor.* Inadequate draft may cause backpuffing into the room and 'plugging' of the chimney *or the catalyst.''*

Example text for Item B:

''Inadequate draft will cause the appliance to leak smoke into the room through appliance and chimney connector joints.''

Example text Item C:

''An uncontrollable burn or a glowing red stove part or chimney connector indicates excessive draft.''

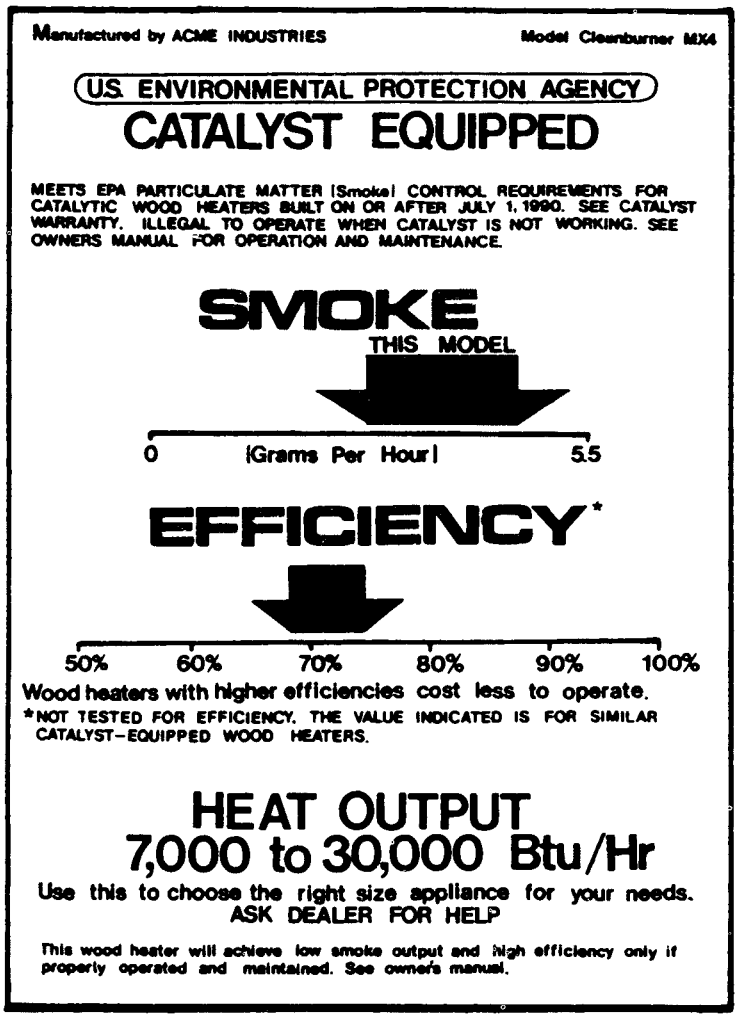

Figure 1. Temporary label for hypothetical wood heater: (1) catalytic, (2) estimated efficiency, and (3) meets 1990 standard.
Emissions: 3.5 g/hr
Efficiency: 72 percent

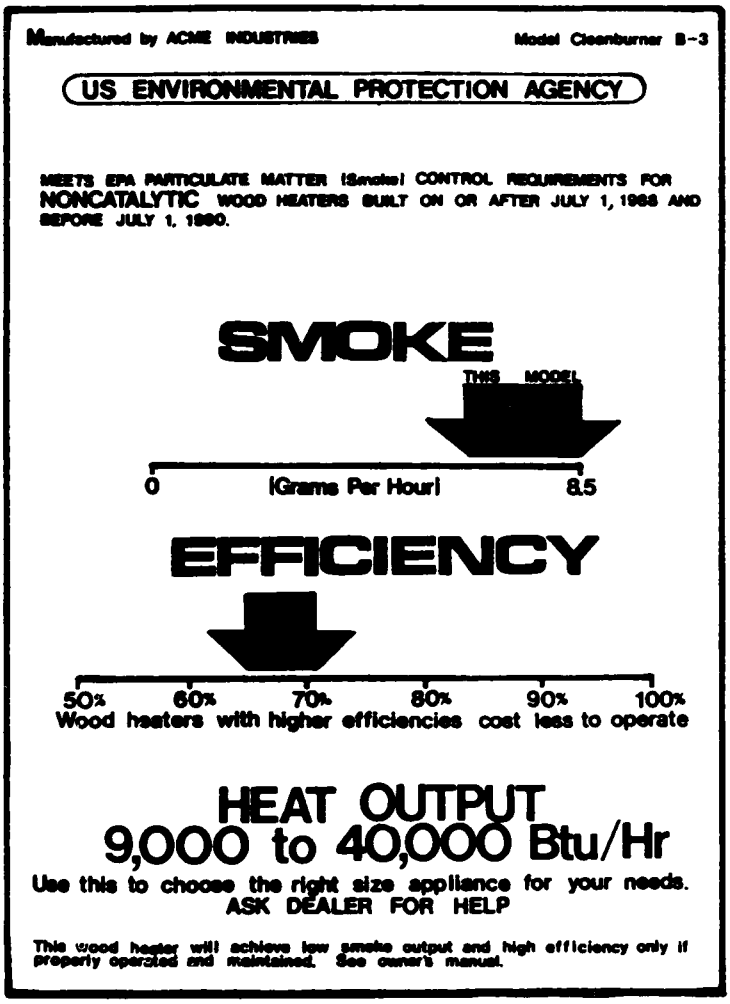

Figure 2. Temporary label for hypothetical wood heater: (1) noncatalytic, (2) measured efficiency, and (3) meets 1988 standard.
Emissions: 7.8 g/hr
Efficiency: 68 percent

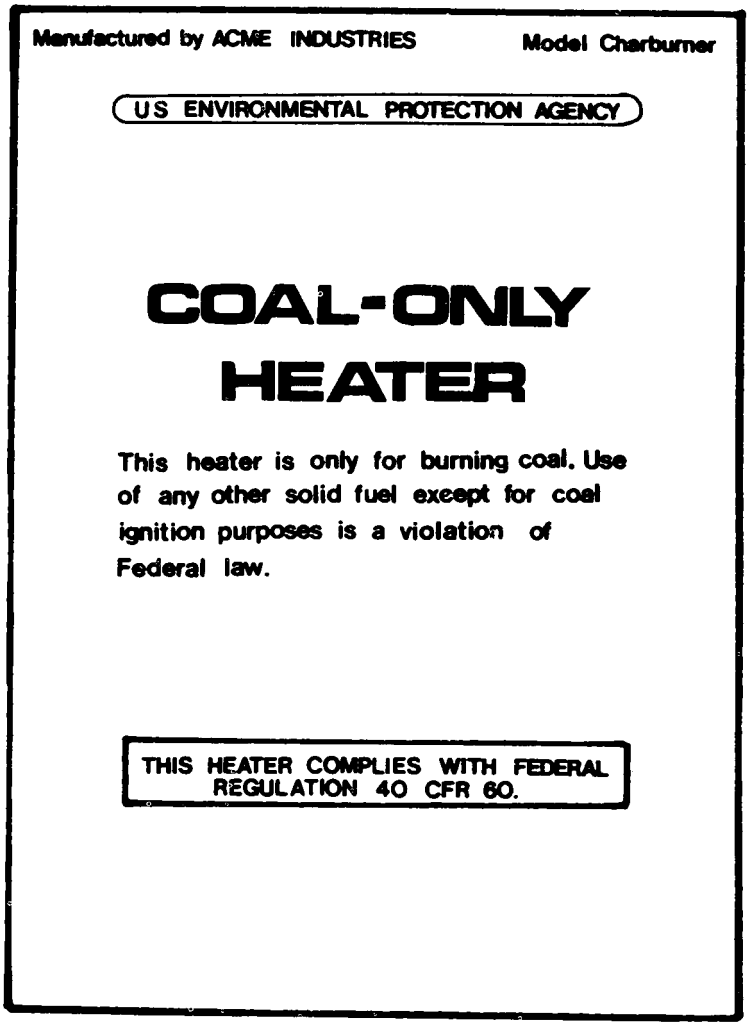

Figure 3. Temporary-label for hypothetical coal-only heater.

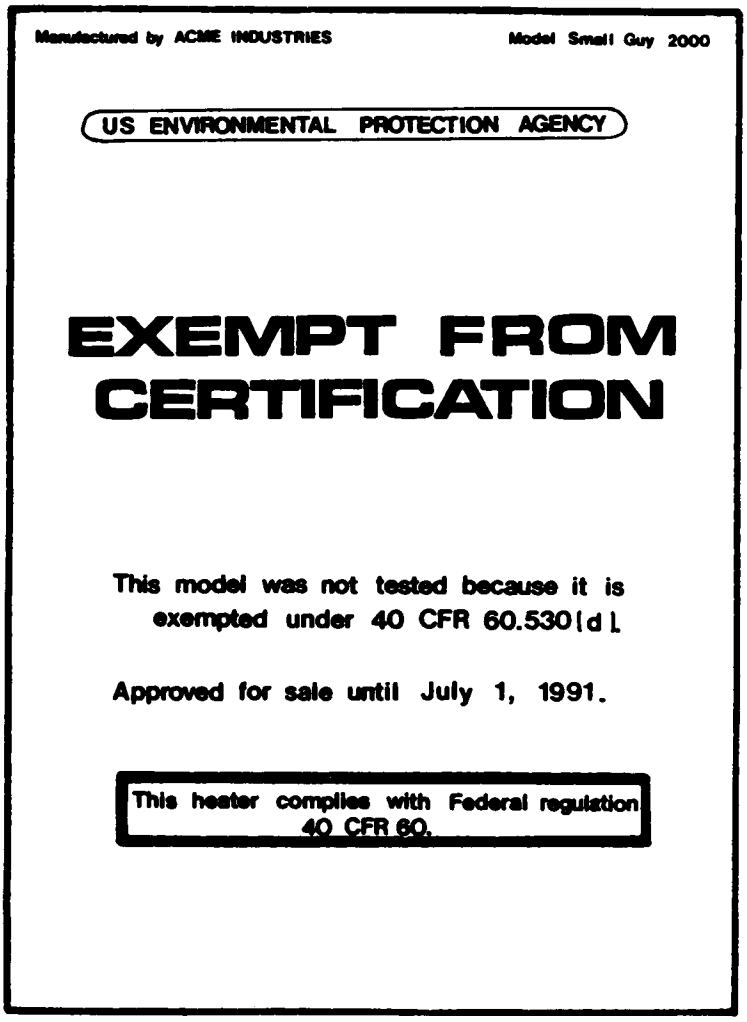

Figure 4. Temporary label for hypothetical wood heater. exempted under samll manufacturer exemption.

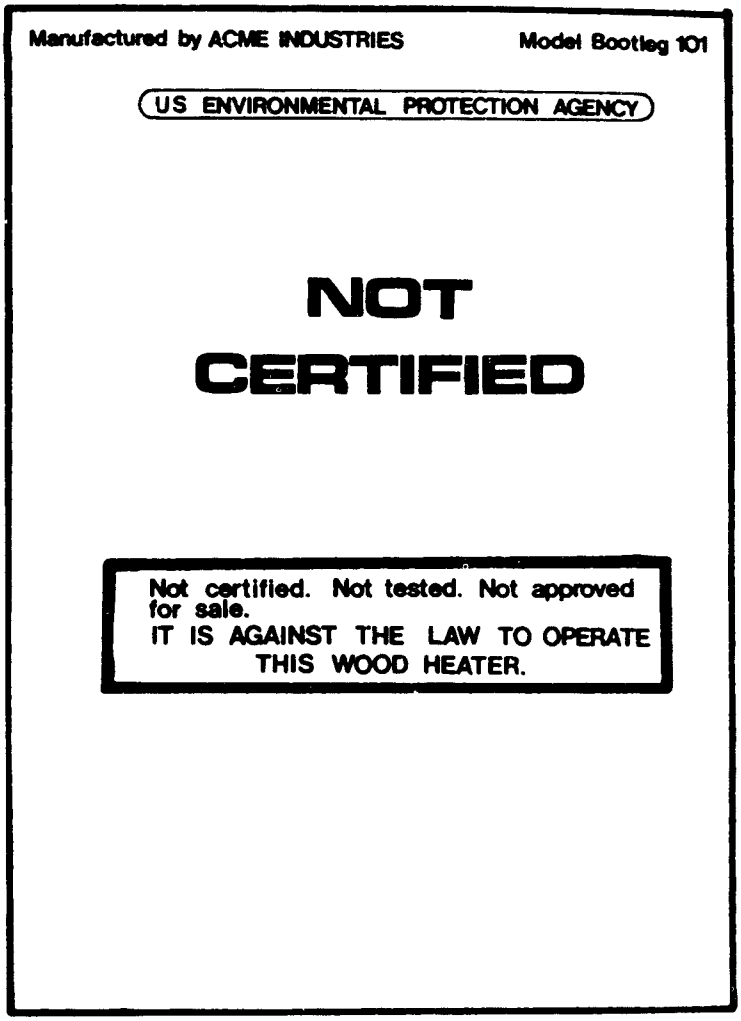

Figure 5. Temporary label for hypothetical wood heater that was not tested, not certified, and does not meet applicable standards.

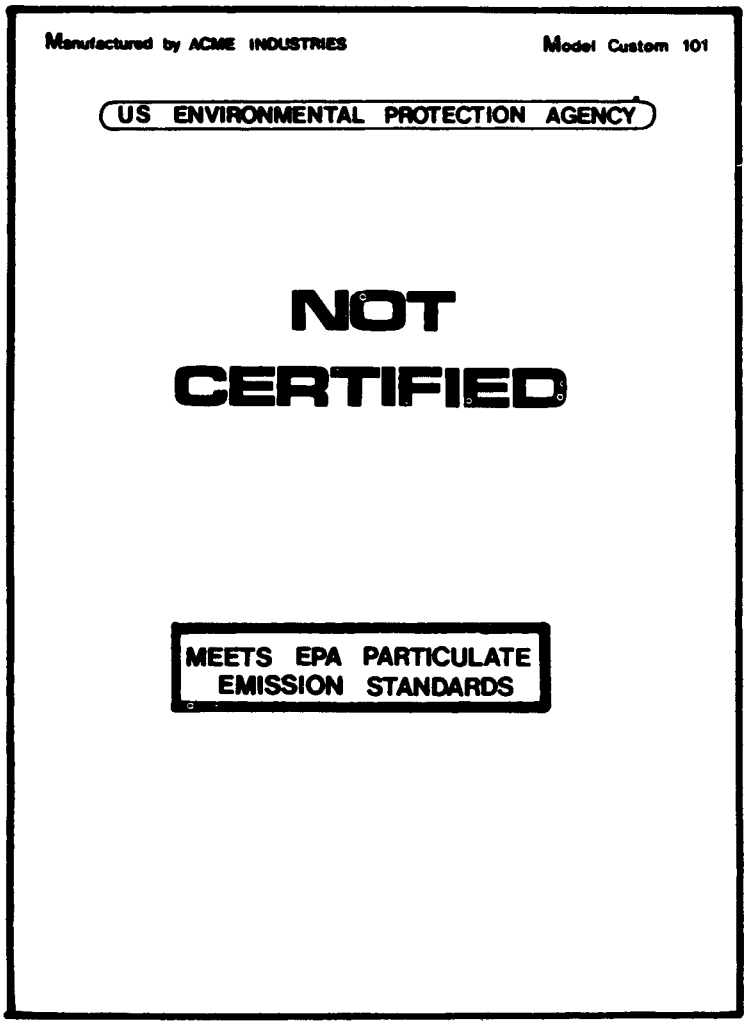

Figure 6. Temporary label for hypothetical wood heater that has been tested, meets applicable standards, but was not certified.

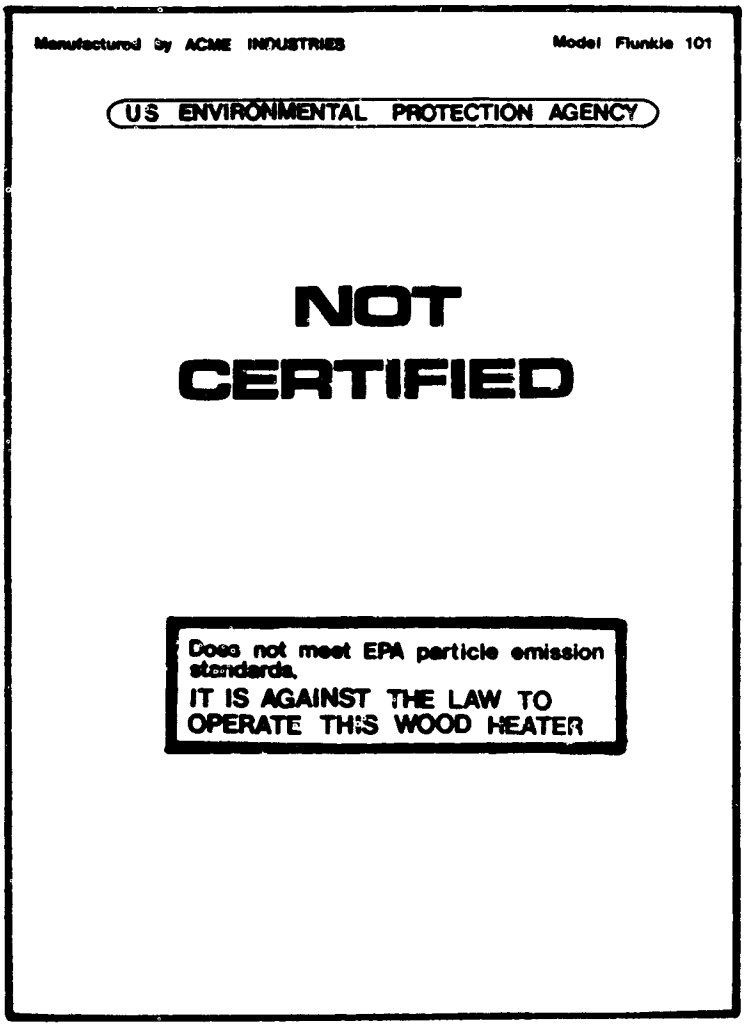

Figure 7. Temporary label for hypothetical wood heater that has been tested, but does not meet applicable standards and was not certified.

[53 FR 5913, Feb. 26, 1988]