AUTHENTICATED
U.S. GOVERNMENT
INFORMATION
GPO

Title 49—Transportation

(This book contains parts 1 to 99)

Part

SUBTITLE A—OFFICE OF THE SECRETARY OF TRANSPORTATION 1

Subtitle A—Office of the Secretary of Transportation

Part		*Page*
1	Organization and delegation of powers and duties ..	5
3	Official seal	49
5	Rulemaking procedures	50
6	Implementation of Equal Access to Justice Act in agency proceedings	53
7	Public availability of information	59
8	Classified information: Classification/declassification/access	73
9	Testimony of employees of the Department and production of records in legal proceedings	81
10	Maintenance of and access to records pertaining to individuals	86
11	Protection of human subjects	99
15	Protection of sensitive security information	110
17	Intergovernmental review of Department of Transportation programs and activities	116
18	Uniform administrative requirements for grants and cooperative agreements to State and local governments	119
19	Uniform administrative requirements for grants and agreements with institutions of higher education, hospitals, and other non-profit organizations	149
20	New restrictions on lobbying	177
21	Nondiscrimination in federally-assisted programs of the Department of Transportation—Effectuation of Title VI of the Civil Rights Act of 1964	189
23	Participation of disadvantaged business enterprise in airport concessions	200
24	Uniform relocation assistance and real property acquisition for Federal and federally-assisted programs	220
25	Nondiscrimination on the basis of sex in education programs or activities receiving Federal financial assistance	268

Part		Page
26	Participation by disadvantaged business enterprises in Department of Transportation financial assistance programs	284
27	Nondiscrimination on the basis of disability in programs or activities receiving Federal financial assistance	344
28	Enforcement of nondiscrimination on the basis of handicap in programs or activities conducted by the Department of Transportation	356
30	Denial of public works contracts to suppliers of goods and services of countries that deny procurement market access to U.S. contractors	364
31	Program fraud civil remedies	369
32	Governmentwide requirements for drug-free workplace (financial assistance)	385
37	Transportation services for individuals with disabilities (ADA)	390
38	Americans with Disabilities Act (ADA) accessibility specifications for transportation vehicles	480
40	Procedures for transportation workplace drug and alcohol testing programs	518
41	Seismic safety	632
71	Standard time zone boundaries	634
79	Medals of honor	640
80	Credit assistance for surface transportation projects	640
89	Implementation of the Federal Claims Collection Act	646
91	International air transportation fair competitive practices	653
92	Recovering debts to the United States by salary offset	655
93	Aircraft allocation	664
95	Advisory committees	665
98	Enforcement of restrictions on post-employment activities	668
99	Employee responsibilities and conduct	670
APPENDIX TO SUBTITLE A—UNITED STATES RAILWAY ASSOCIATION—EMPLOYEE RESPONSIBILITIES AND CONDUCT		673

PART 1—ORGANIZATION AND DELEGATION OF POWERS AND DUTIES

Subpart A—General

Sec.
1.1 Purpose.
1.2 Definitions.
1.3 Organization of the Department.
1.4 General responsibilities.

Subpart B—Office of the Secretary

1.21 Purpose.
1.22 Structure.
1.23 Spheres of primary responsibility.
1.24 Authority.
1.25 Relationships.
1.26 Secretarial succession.

Subpart C—Delegations

1.41 Purpose.
1.42 Exercise of authority.
1.43 General limitations and reservations.
1.44 Reservation of authority.
1.45 Delegations to all Administrators.
1.46 Delegations to the Administrator of the Research and Innovative Technology Administration.
1.47 Delegations to Federal Aviation Administrator.
1.48 Delegations to Federal Highway Administrator.
1.49 Delegations to Federal Railroad Administrator.
1.50 Delegation to National Highway Traffic Safety Administrator.
1.51 Delegations to Federal Transit Administrator.
1.52 Delegations to Saint Lawrence Seaway Development Corporation Administrator.
1.53 Delegations to the Administrator of the Pipeline and Hazardous Materials Safety Administration.
1.54 Delegations to all Secretarial Officers.
1.55 Delegations to Deputy Secretary.
1.56 Delegations to the Assistant Secretary for Transportation Policy.
1.56a Delegations to the Assistant Secretary for Aviation and International Affairs.
1.56b Delegations to the Designated Senior Career Official, Office of the Assistant Secretary for Aviation and International Affairs.
1.57 Delegations to General Counsel.
1.57a Delegations to Deputy General Counsel.
1.57b Delegations to the Assistant General Counsel for Operations.
1.58 Delegations to Assistant Secretary for Budget and Programs.
1.59 Delegations to Assistant Secretary for Administration.
1.59a Redelegations by the Assistant Secretary for Administration.
1.60 Delegations to the Inspector General.
1.61 Delegations to Assistant Secretary for Governmental Affairs.
1.62 Delegations to the Director of Small and Disadvantaged Business Utilization.
1.63 Delegations to Assistant to the Secretary and Director of Public Affairs.
1.64 Delegations to the Director, Transportation Administrative Service Center.
1.65 Authority to classify information.
1.66 Delegations to Maritime Administrator.
1.67 Delegations to Maritime Subsidy Board.
1.68 Delegations to the Under Secretary of Transportation for Security for the Transportation Security Administration.
1.69 Delegations to the Director of Intelligence, Security, and Emergency Response.
1.70 Delegations to the Director of the Departmental Office of Civil Rights.
1.71 [Reserved]
1.72 Delegations to the Office of the Chief Information Officer.
1.73 Delegation to the Administrator of the Federal Motor Carrier Safety Administration.
1.74 Delegations to the Under Secretary for Transportation Policy.
APPENDIX A TO PART 1—DELEGATIONS AND REDELEGATIONS BY SECRETARIAL OFFICERS

AUTHORITY: 49 U.S.C. 322; 28 U.S.C. 2672; 31 U.S.C. 3711(a)(2); Public Law 101–552, 104 Stat. 2736; Public Law 106–159, 113 Stat. 1748; Public Law 107–71, 115 Stat. 597; Public Law 107–295, 116 Stat. 2064; Public Law 107–295, 116 Stat. 2065; Public Law 107–296, 116 Stat. 2135; 41 U.S.C. 414; Public Law 108–426, 118 Stat. 2423; Public Law 109–59, 119 Stat. 1144; Public Law 110–140, 121 Stat. 1492.

SOURCE: Amdt. 1–113, 40 FR 43901, Sept. 24, 1975, unless otherwise noted.

Subpart A—General

§ 1.1 Purpose.

This part describes the organization of the Department of Transportation and provides for the performance of duties imposed upon, and the exercise of powers vested, in the Secretary of Transportation by law.

§ 1.2 Definitions.

As used in this part, *Administrator* includes:

(a) The Federal Aviation Administrator.

(b) The Federal Highway Administrator.

(c) The Federal Railroad Administrator.

(d) The National Highway Traffic Safety Administrator.

(e) The Federal Transit Administrator.

(f) The Administrator of the St. Lawrence Seaway Development Corporation.

(g) The Pipeline and Hazardous Materials Safety Administrator.

(h) The Maritime Administrator.

(i) The Research and Innovative Technology Administrator.

(j) The Federal Motor Carrier Safety Administrator.

[Amdt. 1–113, 40 FR 43901, Sept. 24, 1975, as amended by Amdt. 1–157, 45 FR 83403, Dec. 18, 1980; Amdt. 1–164, 46 FR 47458, Sept. 28, 1981; Amdt. 1–270, 60 FR 30196, June 8, 1995; 65 FR 221, Jan. 4, 2000; 66 FR 67118, Dec. 28, 2001; 67 FR 629, Jan. 4, 2002; 68 FR 34549, June 10, 2003; 70 FR 8300, Feb. 18, 2005]

§ 1.3 Organization of the Department.

(a) The Secretary of Transportation is the head of the Department.

(b) The Department is comprised of the Office of the Secretary and the following operating elements, the heads of which report directly to the Secretary:

(1) The Federal Aviation Administration, headed by the Administrator.

(2) The Federal Highway Administration, headed by the Administrator.

(3) The Federal Railroad Administration, headed by the Administrator.

(4) The National Highway Traffic Safety Administration, headed by the Administrator.

(5) The Federal Transit Administration, headed by the Administrator.

(6) The St. Lawrence Seaway Development Corporation, headed by the Administrator.

(7) The Pipeline and Hazardous Materials Safety Administration, headed by the Administrator.

(8) The Maritime Administration, headed by the Administrator and including within it the Maritime Subsidy Board composed of the Maritime Administrator, the Deputy Maritime Administrator, and the Chief Counsel of the Maritime Administration.

(9) The Research and Innovative Technology Administration, headed by the Administrator.

(10) [Reserved]

(11) The Federal Motor Carrier Safety Administration, headed by the Administrator.

[Amdt. 1–113, 40 FR 43901, Sept. 24, 1975, as amended by Amdt. 1–157, 45 FR 83403, Dec. 18, 1980; Amdt. 1–164, 46 FR 47458, Sept. 28, 1981; Amdt. 1–270, 60 FR 30196, June 8, 1995; 65 FR 221, Jan. 4, 2000; 66 FR 67118, Dec. 28, 2001; 68 FR 34549, June 10, 2003; 70 FR 8300, Feb. 18, 2005]

§ 1.4 General responsibilities.

(a) *Office of the Secretary*. Provides for:

(1) Leadership in formulating and executing well-balanced national and international transportation objectives, policies, and programs;

(2) Stimulating and promoting research and development in all modes and types of transportation, with special emphasis on transportation safety;

(3) Coordinating the various transportation programs of the Federal Government;

(4) Encouraging maximum private development of transportation services;

(5) Responsive, timely, and effective liaison with Congress, and public and private organizations on transportation matters;

(6) Innovative approaches to urban transportation and environmental enhancement programs; and

(7) Effective management of the Department as a whole.

(b) *The Federal Aviation Administration*. Is responsible for:

(1) Promulgating and enforcing regulations on all safety matters relating to the manufacture, operation, and maintenance of aircraft;

(2) Registering aircraft and recording rights in aircraft;

(3) Developing, modifying, testing, and evaluating systems, procedures, facilities, and devices needed for the safe and efficient navigation and traffic control of aircraft;

(4) Locating, constructing or installing, maintaining, and operating Federal aids to air navigation, wherever necessary;

(5) Developing air traffic regulations, and administering air traffic control of civil and military air operations within U.S. airspace;

(6) Providing grants-in-aid for developing public airports;

(7) Promoting and encouraging civil aviation abroad through technical aviation assistance to other governments; and

(8) Promulgating and enforcing regulations on all safety matters relating to commercial launch activities.

(c) *The Federal Highway Administration*. Is responsible for:

(1) Planning, in cooperation with the States, the national highway system;

(2) Providing for improving, in cooperation with the States, roads on the Federal-aid primary, secondary, and interstate highway systems and urban extensions thereof;

(3) Highway beautification and scenic enhancement of the Federal-aid highway systems;

(4) Surveying and constructing forest highway system roads, defense highways and access roads, and parkways and roads in national parks and other federally administered areas;

(5) Developing and administering uniform State standards for highway safety programs with respect to identification and surveillance of accident locations; highway design, construction, and maintenance, including highway related aspects of pedestrian safety; and traffic control devices.

(d) *The Federal Railroad Administration*. Is responsible for:

(1) Operating and managing the Alaska Railroad;

(2) Conducting research and development activity in support of improved rail transportation;

(3) Regulating safety functions pertaining to railroads, express companies, and water carriers operating in connection with railroads under a common control, management, or arrangement for continuous carriage or shipment; and

(4) Investigating and issuing reports concerning collisions, derailments, and other railroad accidents resulting in serious injury to persons or to the property of a railroad.

(e) *The National Highway Traffic Safety Administration*. Is responsible for:

(1) Promulgating uniform standards for developing State highway safety programs, except for those standards the development and administration of which are delegated to the Federal Highway Administration.

(2) Establishing, prescribing, and enforcing National standards for improving safety in the operation and performance of motor vehicles and equipment.

(3) Informing the public of the comparative characteristics and operational cost of passenger motor vehicles and requiring display of comparative insurance costs by automobile dealers.

(4) Administering a program of mandatory automotive fuel economy standards for passenger and non-passenger automobiles for model year 1978 and beyond.

(5) Establishing safeguards for the protection of purchasers with respect to the sale of motor vehicles having altered or reset odometers and enforcing the prohibition against tampering with odometers.

(f) *The Federal Transit Administration*. Is responsible for:

(1) Exercising the authority vested in the Secretary for developing comprehensive and coordinated public transportation systems that serve the public.

(2) Administering Federal transportation assistance programs and functions; and

(3) Assuring appropriate liaison and coordination with other Federal agencies, state and local governmental authorities, with respect to the foregoing.

(g) *The St. Lawrence Seaway Development Corporation*. Is responsible for the development, operation, and maintenance of that part of the St. Lawrence Seaway within the territorial limits of the United States.

(h) *The Pipeline and Hazardous Materials Safety Administration*. Is responsible for:

(1) Administering a national program of safety in natural gas and hazardous liquid pipeline transportation including identifying pipeline safety concerns, developing uniform safety standards, and promulgating and enforcing safety regulations.

(2) Administering a national program of safety, including security, in multimodal hazardous materials transportation including identifying hazardous materials safety concerns, developing uniform safety standards, and promulgating and enforcing safety and security regulations.

(i) *The Maritime Administration.* Is responsible for:

(1) Fostering the development and maintenance of an American merchant marine sufficient to meet the needs of the national security and of the domestic and foreign commerce of the United States;

(2) Awarding and administering construction-differential subsidy contracts and operating-differential subsidy contracts to aid the American merchant marine, and trade-in allowances for new ship construction;

(3) Entering into and administering agreements for capital contruction funds (excepting fishing vessels) and construction reserve funds;

(4) Providing insurance on construction loans and ship mortgages or guarantees on ship financing obtained from private sources for ship construction and reconstruction (excepting fishing vessels);

(5) Providing assistance to the shipping industry to generate increased trade and cargo shipments on U.S. flag ships;

(6) Promoting development of ports and intermodal transportation systems;

(7) Promoting development of the domestic waterborne commerce of the United States;

(8) Overseeing the administration of cargo preference statutes;

(9) Entering into and administering charters and general agency agreements for operation of Government-owned merchant ships;

(10) Maintaining custody of, and preserving, ships in the National Defense Reserve Fleet;

(11) Selling surplus Government-owned ships;

(12) Supervising design and construction of ships for Government account;

(13) Furnishing war risk insurance on privately owned merchant ships;

(14) Administering the foreign transfer program regarding ships and other maritime properties;

(15) Training merchant marine officers;

(16) Conducting research and development to improve and promote the waterborne commerce of the United States; and

(17) Issuing rules and regulations with respect to the foregoing functions.

(j) *The Maritime Subsidy Board (within the Maritime Administration).* Is responsible for:

(1) Making, amending, and terminating subsidy contracts, which shall be deemed to include, in the case of construction-differential subsidy: (i) The contract for the construction, reconstruction, or reconditioning of a vessel, and (ii) the contract for the sale of the vessel to the subsidy applicant or the contract to pay a construction-differential subsidy and the cost of the national defense features, and, in the case of operating-differential subsidy, the contract with the subsidy applicant for the payment of the subsidy.

(2) Conducting hearings and making determinations antecedent to making, amending, and terminating subsidy contracts, under the provisions of titles V, VI, and VII, and sections 301 (except investigations, hearings, and determinations, including changes in determinations, with respect to minimum manning scales, minimum wage scales, and minimum working conditions), 708, 805(a), and 805(f) of the Merchant Marine Act, 1936, as amended (the ''Act'').

(3) Approving the sale, assignment, or transfer of any operating subsidy contract under section 608 of the Act.

(4) Performing so much of the functions with respect to adopting rules and regulations, subpoenaing witnesses, administering oaths, taking evidence, and requiring the production of books, papers, and documents, under sections 204 and 214 of the Act, as they relate to the functions of the Board.

(5) Performing as much of the functions specified in section 12 of the Shipping Act, 1916, as amended, as the same relate to the functions of the Board under paragraphs (k) (1) through (4) of this section.

(k) *The Research and Innovative Technology Administration*. Is responsible for:

(1) Coordinating, facilitating, and reviewing the Department's research and development programs and activities, except as limited by section 4(b)(1) of the Norman Y. Mineta Research and Special Programs Improvement Act (Pub. L. 108–426, 118 Stat. 2423 (November 30, 2004)).

(2) After consultation with modal and OST offices, making recommendations to the Secretary on all modal and OST research budgets.

(3) Serving as the focal point for Departmental research, development, and technology endeavors, in coordination with the Under Secretary for Policy.

(4) Planning, developing, initiating and managing programs in transportation research and development. Programs undertaken by RITA shall not be duplicative of similar programs undertaken by any modal or OST office. Maintaining the capability to perform research, development, and analysis in transportation planning and socio-economic effects, program management, and provide advice on technology in DOT policy development. Particular efforts will be made on analyzing transportation systems problems and developing innovative research products, processes and applications to solve them, advanced transportation concepts, and multimodal transportation. RITA will develop and maintain vital statistics and related transportation information databases.

(5) Providing leadership on technical, navigation, communication, and systems engineering activities.

(6) Providing a point of contact for the Department with the academic community to encourage transportation research.

(7) Providing university transportation research grants.

(8) Managing a Transportation Safety Institute which designs and conducts training programs responsive to the requirements of Government and industry as expressed by the operating administrations of the Department.

(9) Carrying out comprehensive transportation statistics research, analysis, and reporting.

(10) Providing oversight of the activities of the Bureau of Transportation Statistics.

(11) Providing oversight of the activities of the Volpe National Transportation Systems Center.

(12) Coordinating intermodal research initiatives and planning activities.

(13) Serving as a focal point within the Federal government for coordination of intermodal transportation research and development policy, in coordination with the Under Secretary for Policy.

(l) *The Federal Motor Carrier Safety Administration*. Is responsible for:

(1) Managing program and regulatory activities, including administering laws and promulgating and enforcing regulations on safety matters relating to motor carrier safety;

(2) Carrying out motor carrier registration and authority to regulate household goods transportation;

(3) Developing strategies for improving commercial motor vehicle, operator, and carrier safety;

(4) Inspecting records and equipment of commercial motor carriers, and investigating accidents and reporting violations of motor carrier safety regulations; and

(5) Carrying out research, development, and technology transfer activities to promote safety of operation and equipment of motor vehicles for the motor carrier transportation program.

[Amdt. 1–113, 40 FR 43901, Sept. 24, 1975]

EDITORIAL NOTE: For FEDERAL REGISTER citations affecting §1.4, see the List of CFR Sections Affected, which appears in the Finding Aids section of the printed volume and on GPO Access.

Subpart B—Office of the Secretary

§ 1.21 Purpose.

This subpart establishes the basic organizational structure, spheres of primary responsibility, and lines of authority in the Office of the Secretary. It also describes the relationships between the Office of the Secretary and the operating administrations, and provides for succession to the position of Secretary in case of need.

§ 1.22 Structure.

(a) *Secretary and Deputy Secretary.* The Secretary and Deputy Secretary are assisted by the following, all of which report directly to the Secretary: The Under Secretary for Policy; the Executive Secretariat; the Board of Contract Appeals; the Departmental Office of Civil Rights; the Office of Small and Disadvantaged Business Utilization; the Office of Intelligence, Security, and Emergency Response; the Office of Public Affairs; and the Office of the Chief Information Officer. The Assistant Secretaries, the General Counsel, and the Inspector General also report directly to the Secretary.

(b) *Office of the Assistant Secretary for Transportation Policy.* This Office is composed of the Offices of Environment, Energy and Safety; and Economics.

(c) *Office of the Assistant Secretary for Aviation and International Affairs.* This Office is composed of the Offices of Aviation International Economics; International Transportation and Trade; International Aviation; and Aviation Analysis.

(d) *Office of the General Counsel.* This Office is composed of the Offices of Environmental, Civil Rights, and General Law; International Law; Litigation; Legislation; Regulation and Enforcement; and Aviation Enforcement and Proceedings.

(e) *Office of the Assistant Secretary for Budget and Programs.* This Office is composed of the Offices of Programs and Evaluation; and Budget.

(f) *Office of the Assistant Secretary for Governmental Affairs.* This office is composed of the Offices of Congressional Affairs and Intergovernmental Affairs.

(g) *Office of the Assistant Secretary for Administration.* This Office is composed of the Offices of Personnel; Management Planning; Information Resource Management; Administrative Services and Property Management; Hearings; Acquisition and Grant Management; Security; Financial Management; and Administrative Systems Development.

(h) *Office of the Inspector General.* The duties and responsibilities of the Office of Inspector General are carried out by the Assistant Inspector General for Auditing; the Assistant Inspector General for Investigations; the Assistant Inspector General for Policy, Planning, and Resources; and the Assistant Inspector General for Inspections and Evaluations.

[Amdt. 1–261, 59 FR 10061, Mar. 3, 1994, as amended by Amdt.1–268, 60 FR 14226, Mar. 16, 1995; Amdt. 1–269, 60 FR 15877, Mar. 28, 1995; Amdt. 1–274, 60 FR 62762, Dec. 7, 1995; Amdt. 1–290, 62 FR 51804, Oct. 3, 1997; 68 FR 34549, June 10, 2003; 70 FR 8300, Feb. 18, 2005]

§ 1.23 Spheres of primary responsibility.

(a) *Secretary and Deputy Secretary.* Overall planning, direction, and control of departmental affairs including civil rights, contract appeals, small and disadvantaged business participation in departmental programs, transportation research and technology, commercial space transportation, intelligence and security, and public affairs.

(b) The *Under Secretary for Policy.* Provides leadership in the development of policy for the Department, supervises the policy activities of Assistant Secretaries with primary responsibility for aviation, international, and other transportation policy development and carries out other powers and duties prescribed by the Secretary. Assists the Secretary and Deputy Secretary in carrying out a variety of executive and managerial policies, programs and initiatives. Serves as the focal point within the Federal Government for coordination of intermodal transportation policy which brings together departmental intermodal perspectives, advocates intermodal interests, and provides secretarial leadership and visibility on issues that involve or affect more than one operating administration.

(c) *General Counsel.* Legal services as the chief legal officer of the Department, legal advisor to the Secretary and the Office of the Secretary; final authority within the Department on questions of law; professional supervision, including coordination and review, over the legal work of the legal offices of the Department; drafting of legislation and review of legal aspects of legislative matters; point of coordination for the Office of the Secretary and Department Regulations Council;

advice on questions of international law; advice and assistance with respect to uniform time matters; ensures uniform departmental implementation of the Freedom of Information Act (5 U.S.C. 552); responds to requests for records of the Office of the Secretary including the Office of the Inspector General, under that statute; review and final action on applications for reconsideration of initial decisions not to disclose unclassified records of the Office of the Secretary requested under 5 U.S.C. 552(a)(3); promotion and coordination of efficient use of Department legal resources; recommendation, in conjunction with the Assistant Secretary for Administration, of legal career development programs within the Department.

(d) *Assistant Secretary for Transportation Policy*. Principal policy advisor to the Secretary and the Deputy Secretary. Public policy development, coordination, and evaluation for all aspects of transportation, with the goal of making the Nation's transportation resources function as an integrated national system; evaluation of private transportation sector operating and economic issues; evaluation of public transportation sector operating and economic issues; regulatory and legislative initiatives and review; energy, environmental, disability, and safety policy and program development and review; and transportation infrastructure assessment and review.

(e) *Assistant Secretary for Aviation and International Affairs*. Public policy assessment and review; private sector evaluation; international transportation and transport-related trade policy and issues; regulatory and legislative initiatives and review of maritime/shipbuilding policies and programs; transport-related trade promotion; coordination of land transport relations with Canada and Mexico; technical assistance and science and technology cooperation; international visitors' programs; economic regulation of the airline industry; and essential air service program.

(f) *Assistant Secretary for Budget and Programs*. Preparation, review and presentation of Department budget estimates; liaison with OMB and Congressional Budget and Appropriations Committees; departmental financial plans, apportionments, reapportionments, reprogrammings, and allotments; program and systems evaluation and analysis; program evaluation criteria; program resource plans; analysis and review of legislative proposals and one-time reports and studies required by the Congress; budgetary and selected administrative matters relating to the Immediate Office of the Secretary.

(g) *Assistant Secretary for Governmental Affairs*. Coordination of legislative and non-legislative relationships; congressional affairs; communications and coordination with Federal, State and local governments, industry and labor, and with citizens and organizations representing consumers.

(h) *Deputy Assistant Secretary for Tribal Government Affairs*. Plan, coordinate and implement the Department's policies and programs with respect to Indian tribes and tribal organizations. Coordinate intra-Departmental tribal transportation programs and activities. Serve as the Department's primary point of contact in relationships with public and private organizations and groups related to Indian tribes and tribal organizations. Participate in any negotiated rulemaking relating to, or having an impact on, projects, programs, or funding associated with the tribal transportation program.

(i) *Assistant Secretary for Administration*. Organization; delegations of authority; personnel ceiling control; management studies; personnel management; acquisition and grant management (except for the responsibility listed for the Office of Small and Disadvantaged Business Utilization in this section); information resource management; financial management; development and implementation of a Departmental Accounting and Financial Information System (DAFIS); property management information; security; computer support; telecommunications; and administrative support services for the Office of the Secretary and certain other components of the Department.

(j) *Inspector General*. Conduct, supervise, and coordinate audits and investigations, review existing and proposed legislation and make recommendations

to the Secretary and Congress (Semiannual reports) concerning their impact on the economy and efficiency of program administration, or the prevention and detection of fraud and abuse; recommend policies for and conduct, supervise, or coordinate other activities of the Department for the purpose of promoting economy and efficiency in program administration, or preventing and detecting fraud and abuse.

(k) *Executive Secretary*. Central facilitative staff for the Immediate Office of the Secretary and the Secretarial Officers.

(l) *Board of Contract Appeals*. Conducts trials and issues final decisions, which are appealable to the United States Court of Appeals for the Federal Circuit, on appeals from contracting officer decisions under contracts awarded by the Department and its constituent administrations in accordance with the Contract Disputes Act of 1978, 41 U.S.C. 601 et seq.; sits as the Contract Adjustment Board with plenary authority to grant extraordinary contractual relief in accordance with 50 U.S.C. 1431–1435 and Executive Order 10789 (3 CFR, 1954–1958 comp., p. 426), as amended; hears and decides all contractor and subcontractor debarment, suspension, or ineligibility cases pursuant to the Federal Acquisition Regulation, 48 CFR 9.402; judges serve as ''neutrals'' under the Administrative Dispute Resolution Act, 5 U.S.C. 581 et seq., in contract-related matters; and performs such other adjudicatory functions assigned by the Secretary as are consistent with the duties and responsibilities of the Board as set forth in 41 U.S.C. 601 et seq.

(m) *Departmental Office of Civil Rights*. The Director of the Departmental Office of Civil Rights serves as the Department's Equal Employment Opportunity (EEO) Officer and Title VI Coordinator. The Director also serves as principal advisor to the Secretary and the Deputy Secretary on the civil rights and nondiscrimination statutes, regulations, and executive orders applicable to the Department, including titles VI and VII of the Civil Rights Act of 1964, as amended, the Age Discrimination in Employment Act of 1967, as amended, the Age Discrimination Act of 1975, as amended, section 504 of the Rehabilitation Act of 1973, as amended, the Americans with Disabilities Act of 1990, and the Equal Pay Act of 1963. The Office of Civil Rights also provides policy guidance to the operating administrations and Secretarial officers on these matters. Also, the Office periodically reviews and evaluates the civil rights programs of the operating administrations to ensure that recipients of DOT funds meet applicable Federal civil rights requirements.

(n) *Office of Small and Disadvantaged Business Utilization*. Responsible for the Department's implementation and execution of the functions and duties under sections 8 and 15 of the Small Business Act, as amended, (15 U.S.C. 637 and 644), and for other departmental small and disadvantaged business policy direction.

(o) [Reserved]

(p) Office of Intelligence, Security and Emergency Response. Responsible for intelligence and security matters within the Department of Transportation that affect the safety of the traveling public, and for emergency preparedness and response functions and activities within the Department and operation of the Department's Crisis Management Center.

(q) *Office of Public Affairs*. Focal point for public information and departmental relations with the news media, the general public, and selected special publics.

(r) *Office of the Chief Information Officer*. Serves as principal advisor to the Secretary on matters involving information resources and information systems management.

[Amdt. 1–261, 59 FR 10062, Mar. 3, 1994, as amended by Amdt. 265, 60 FR 2891, Jan. 12, 1995; Amdt. 1–274, 60 FR 62762, Dec. 7, 1995; Amdt. 1–290, 62 FR 51804, Oct. 3, 1997; 68 FR 34549, June 10, 2003; 69 FR 44972, July 28, 2004; 70 FR 7670, Feb. 15, 2005; 70 FR 8300, Feb. 18, 2005; 71 FR 30830, May 31, 2006]

§ 1.24 Authority.

(a) The Deputy Secretary: (1) May exercise the authority of the Secretary, except where specifically limited by law, order, regulation, or instructions of the Secretary; and (2) serves as the Chief Acquisition Officer.

(b) Acting in his or her own name and title, each Assistant Secretary, the Inspector General, or the General Counsel, within his or her sphere of responsibility, is authorized to identify and define the requirements for, and to recommend to the Secretary, new or revised Departmental policies, plans, and proposals. Each of these officers is authorized to issue Departmental standards, criteria, systems and procedures that are consistent with applicable laws, Executive Orders, Governmentwide regulations and policies established by the Secretary, and to inspect, review, and evaluate Departmental program performance and effectiveness and advise the Secretary regarding the adequacy thereof.

(c) Except for nondelegable statutory duties, including those which devolve as a result of succession to act as Secretary of Transportation, each Deputy Assistant Secretary, the Deputy Inspector General, and the Deputy General Counsel is authorized to act for and perform the duties of his or her principal in the absence or disability of the principal and as otherwise directed by the principal.

(d) *Inspector General.* The Inspector General shall report to and be under the general supervision of the Secretary and Deputy Secretary. In accordance with the statutory intent of the Inspector General Act to create an independent and objective unit, the Inspector General is authorized to make such investigations and reports relating to the administration of the programs and operations of the Department as are, in the judgment of the Inspector General, necessary and desirable. Neither the Secretary nor the Deputy Secretary shall prevent or prohibit the Inspector General from initiating, carrying out, or completing any audit or investigation, or from issuing any subpoena during the course of any audit or investigation.

[Amdt. 1–113, 40 FR 43901, Sept. 24, 1975, as amended by Amdt. 1–157, 45 FR 83404, Dec. 18, 1980; 69 FR 60563, Oct. 12, 2004]

§ 1.25 Relationships.

(a) *Normal staff role.* Normally, the functions of the Assistant Secretaries are staff and advisory in nature. In performing their functions, the Assistant Secretaries are responsible for continuing liaison and coordination among themselves and with the operating administrations to:

(1) Avoid unnecessary duplication of effort by or in conflict with the performance of similar activities by the operating administrations and the other Assistant Secretaries pursuant to their Secretarial delegations of authority; and

(2) Assure that the views of the operating administrations are considered in developing Departmental policies, plans, and proposals.

The Assistant Secretaries are also available to assist, as appropriate, the operating administrations in implementing Departmental policy and programs. As primary staff advisors to the Secretary, the Assistant Secretaries are concerned with transportation matters of the broadest scope, including modal, intermodal, and other matters of Secretarial interest.

(b) *Exceptions.* There are exceptions to the normal staff role described in paragraph (a) of this section. In selected instances, the Secretary has specifically delegated to Assistant Secretaries authority which they may exercise on the Secretary's behalf. For example, the Secretary has delegated authority to the Assistant Secretary for Transportation Policy and the Assistant Secretary for Aviation and International Affairs, as appropriate, to decide on most requests to intervene or appear before administrative agencies, subject to the concurrence of the General Counsel. Also, from time to time, activities of an operational character may be delegated to an Assistant Secretary when the nature of the function or its stage of development makes it untimely to effect assignment to an operating administration.

[Amdt. 1–113, 40 FR 43901, Sept. 24, 1975, as amended by Amdt. 1–157, 45 FR 83405, Dec. 18, 1980; Amdt. 1–261, 59 FR 10063, Mar. 3, 1994]

§ 1.26 Secretarial succession.

(a) The following officials, in the order indicated, shall act as Secretary of Transportation, in case of the absence or disability of the Secretary, until the absence or disability ceases, or in the case of a vacancy, until a successor is appointed. Notwithstanding

the provisions of this section, the President retains discretion, to the extent permitted by the law, to depart from this order in designating an acting Secretary of Transportation.

(1) Deputy Secretary.

(2) Under Secretary of Transportation for Policy.

(3) General Counsel.

(4) Assistant Secretary for Budget and Programs.

(5) Assistant Secretary for Transportation Policy.

(6) Assistant Secretary for Governmental Affairs.

(7) Assistant Secretary for Aviation and International Affairs.

(8) Assistant Secretary for Administration.

(9) Federal Aviation Administrator.

(10) Federal Aviation Administration Regional Administrator, Southwest Region.

(11) Federal Aviation Administration Regional Administrator, Great Lakes Region.

(b) Without regard to the foregoing, a person directed to perform the duties of the Secretary pursuant to 5 U.S.C. 3347 shall act as Secretary of Transportation.

[Amdt. 1–157, 45 FR 83405, Dec. 18, 1980, as amended by Amdt. 1–184, 48 FR 44079, Sept. 27, 1983; Amdt. 1–261, 59 FR 10063, Mar. 3, 1994; Amdt. 1–291, 62 FR 55357, Oct. 24, 1997; 68 FR 35184, June 12, 2003; 73 FR 14728, Mar. 19, 2008]

Subpart C—Delegations

§ 1.41 Purpose.

(a) Except as provided in paragraph (b) of this section, this subpart provides for the exercise of the powers and performance of the duties vested in the Secretary of Transportation by law.

(b) For delegations of authority vested in the Secretary by Executive Order 11652 originally to classify documents as secret or confidential, see §8.11 of this subtitle.

§ 1.42 Exercise of authority.

In exercising powers and performing duties delegated by this subpart or redelegated pursuant thereto, officials of the Department of Transportation are governed by applicable laws, Executive orders and regulations and by policies, objectives, plans, standards, procedures, and limitations as may be issued from time to time by or on behalf of the Secretary, or, with respect to matters under their jurisdictions, by or on behalf of the Deputy Secretary, an Assistant Secretary, the Inspector General, the General Counsel, or an Administrator. This includes, wherever specified, the requirement for advance notice to, prior coordination with, or prior approval by an authority other than that of the official proposing to act.

[Amdt. 1–114, 41 FR 1288, Jan. 7, 1976, as amended by Amdt. 1–157, 45 FR 83405, Dec. 18, 1980]

§ 1.43 General limitations and reservations.

(a) All powers and duties that are not delegated by the Secretary in this subpart, or otherwise vested in officials other than the Secretary, are reserved to the Secretary. Except as otherwise provided, the Secretary may exercise powers and duties delegated or assigned to officials other than the Secretary.

(b) Except as provided in §1.42 and subject to paragraph (a) of this section and §1.44, the Deputy Secretary, the Assistant Secretaries, the Inspector General, the General Counsel, and the Administrators exercise the powers and perform the duties delegated to them under this subpart.

(c) Notwithstanding the provisions of paragraph (a), the delegation of authority in §1.56b of this title to the Designated Senior Career Official in the Office of the Assistant Secretary for Aviation and International Affairs to make decisions in certain aviation hearing cases is exclusive, and may not be exercised by any other Departmental official, including the Secretary. The Secretary reserves (and delegates to the Assistant Secretary for Aviation and International Affairs) only the authority to make discretionary review of any such decision and to approve it or to remand it for reconsideration by the Designated Senior Career Official, with a full written explanation of the basis for the remand.

[Amdt. 1–157, 45 FR 83405, Dec. 18, 1980, as amended by Amdt. 1–199, 49 FR 50996, Dec. 31, 1984; Amdt. 1–261, 59 FR 10061, 10063, Mar. 3, 1994]

§ 1.44 Reservation of authority.

The delegations of authority in §§ 1.45 through 1.53 and §§ 1.66 and § 1.67 do not extend to the following actions, authority for which is reserved to the Secretary or the Secretary's delegatee within the Office of the Secretary:

(a) *General transportation matters.* (1) Transportation leadership authority under section 4(a) of the Department of Transportation Act (49 U.S.C. 1653(a)).

(2) Functions relating to transportation activities, plans, and programs under section 4(g) of the Department of Transportation Act (49 U.S.C. 1653(g)).

(3) Authority to develop, prepare, coordinate, transmit, and revise transportation investment standards and criteria under section 7 of the Department of Transportation Act (49 U.S.C. 1656).

(4) Authority relating to standard time zones and advanced (daylight) time (15 U.S.C. 260 *et seq.*).

(5) Authority related to national transportation policy under section 3 of the Airport and Airway Development Act of 1970 (84 Stat. 219).

(b) *Legislation and reports.* (1) Submission to the President, the Director of the Office of Management and Budget, or the Congress of proposals or recommendations for legislation, Executive orders, proclamations or reorganization plans or other Presidential action.

(2) Submission to Congress or the President of any report or any proposed transportation policy or investment standards or criteria, except with the prior written approval of the Secretary.

(3) Submission of the annual statement on systems of internal accounting and administrative control under the Federal Managers' Financial Integrity Act of 1982 (Pub. L. 97–255).

(c) *Budget and finance.* (1) Approval and submission to the Office of Management and Budget of original or amended budget estimates or requests for allocations of personnel ceiling (31 U.S.C. 22–24).

(2) Approval of requests for legislation which, if enacted, would authorize subsequent appropriations for the Department (31 U.S.C. 581b).

(3) Transfer of the balance of an appropriation from one operating element to another within the Department (31 U.S.C. 581c).

(4) Submission to the Director of the Office of Management and Budget of requests for the transfer of the balance or portions of an appropriation from one element to another within the Department (31 U.S.C. 665).

(d) *Interventions and appearances.* Except with respect to proceedings relating to safety fitness of an applicant (49 U.S.C. 1653(e)), the making of decisions on requests to intervene or appear before courts and administrative agencies to present the views of the Department.

(e) *Personnel.* (1) Recommendations to the Civil Service Commission of the allocation of a position to GS–16, 17, or 18 or an equivalent level (5 U.S.C. 5108).

(2) Recommendations to the Civil Service Commission of approval of the qualifications of any candidate for a position at grade GS–16, 17, or 18 or an equivalent level (5 U.S.C. 3324), or to an executive level position.

(3) Recommendations to the Civil Service Commission of a Lump-Sum Incentive Award in Excess of $5,000 (5 U.S.C. 4502).

(4) Approval of the following actions relating to Schedules A, B, and C and noncareer executive assignment positions or incumbents, except for actions under Schedules A and B limited to one year or less at grade GS–9 or lower, or an equivalent level:

(i) Establishment or abolition of positions;

(ii) Hires;

(iii) Promotions other than quality and periodic within-grade promotions;

(iv) Transfer of personnel to Schedule A, B, or C positions or non-career executive assignment positions, either permanently or on detail; and

(v) Transfer of personnel from Schedule A, B, or C or non-career executive assignment positions to career Civil Service positions.

(5) Approval of employment of experts or consultants.

(6) Authority relating to scientific and professional positions under section 6(a) (5) of the Department of Transportation Act (49 U.S.C. 1655(a)(5)).

(7) Authority to determine the maximum limit of age for appointment of

air traffic controllers as provided by 5 U.S.C. 3307(b) (86 Stat. 141).

(8) Authority to develop, coordinate, and issue wage schedules under the Federal Wage system.

(f) *Security.* (1) Suspension or removal of an employee from a position in the Department for security reasons under Executive Order 10450 (3 CFR, 1949–53 Comp., p. 936) or the employment in the Department of a person who was previously separated for security reasons from any Federal agency.

(2) Authorizing the filling of a critical-sensitive position for a limited period by a person on whom a preappointment full field investigation has not been completed (Executive Order 10450).

(3) Requesting Presidential approval of a claim of executive privilege with respect to information requested by a congressional committee or Member of Congress.

(4) Making determinations prescribed by sections 4(a)(2)(B), 4(b)(3), 5(b), and 9 of Executive Order 10865 (3 CFR, 1959–63 Comp., p. 398) relating to the adjudication and final denial of access to classified information to industry personnel.

(5) Making those determinations or delegations prescribed by sections 2(B)(3), 5(E)(1) and (2) of Executive Order 11652 (37 FR 5209, March 10, 1972) which are reserved to the head of the Department.

(g) *Procurement.* Exercise of the extraordinary authority for defense contracts provided for in Public Law 85–804 (50 U.S.C. 1431–1435), and considerations and decisions on contract appeals and other matters pursuant to the Department of Transportation Contract Appeals Regulations (41 CFR part 12–60).

(h) *Printing.* Requesting approval of the Joint Committee on Printing for any procurement or other action requiring Committee approval.

(i) *Interagency agreements.* Execution of any written interdepartmental or interagency agreement with the head of another executive department or agency.

(j) *Withholding of funds.* Withholding or suspension of Federal-Aid Highway funds on a state-wide basis and the waiver or compromise of such withholding or suspension, except for the administration of 23 U.S.C. 141 and 154, which are specifically delegated in §1.48(b) (23) and (28) and in §1.50(i) (1) and (2).

(k) *Alaska Railroad.* Extension or abandonment of railroad service.

(l) *National Highway Safety Advisory Committee.* Directing the National Highway Safety Advisory Committee to meet (23 U.S.C. 404(c)).

(m) *Automatic data processing.* Approval authority relating to automatic data processing equipment and services as delimited by DOT 1370.2A, Procurement of Automatic Data Processing Equipment and Services, of 7.22.70.

(n) *Deepwater ports.* The authority to issue, transfer, or amend a license for the construction and operation of a deepwater port (33 U.S.C. 1503(b)).

(o) Deepwater ports. Repealed.

(p) *Review and finality of actions by Maritime Subsidy Board.* (1) Review of any decision, report, and/or order of the Maritime Subsidy Board, as described in 46 CFR part 202, as amended.

(q) *Approval of cash purchases of passenger transportation.* The authority under FPMR G–72, as amended, to authorize and approve cash purchases for emergency passenger transportation services costing more than $100.

[Amdt. 1–113, 40 FR 43901, Sept. 24, 1975]

EDITORIAL NOTE: For FEDERAL REGISTER citations affecting §1.44, see the List of CFR Sections Affected which appears in the Finding Aids section of the printed volume and on GPO Access.

§1.45 Delegations to all Administrators.

(a) Except as prescribed by the Secretary of Transportation, each Administrator is authorized to:

(1) Exercise the authority of the Secretary over and with respect to any personnel within their respective organizations.

(2) Exercise the authority of the Secretary as executive head of a department, under any statute, Executive order or regulation.

(3) Request the Attorney General to approve the award, compromise, or settlement of any tort claim for an amount exceeding $100,000 (excluding interest) (28 U.S.C. 2672).

(4) Carry out the functions vested in the Secretary concerning environmental enhancement by 49 U.S.C. 303.

(5) Carry out the emergency preparedness functions assigned to the Secretary by Executive Order 12656 and by the Federal Emergency Management Agency, General Services Administration (FEMA/GSA) as they pertain to his administration, including those relating to continuity of operations, emergency resource management, associated Federal claimant procedures, facilities protection and warfare effects monitoring and reporting, research, stockpiling, financial aid, and training.

(6) Enter into inter- and intradepartmental reimbursable agreements other than with the head of another department or agency (31 U.S.C. 686). This authority may be redelegated only to Office Directors, Regional Directors, District Commanders or other comparable levels and Contracting Officers.

(7) Determine the existence and amount of indebtedness and the method of collecting repayments from employees and members within their respective administrations and collect repayments accordingly, as provided by 5 U.S.C. 5514. Redelegation of this authority may be made only to the principal officials responsible for financial management or such officials' principal assistants.

(8) Waive claims and make refunds in connection with claims of the United States for erroneous payment of pay and allowances or of travel, transportation, and relocation expenses and allowances in amounts aggregating not more than $1,500 without regard to any repayments, and deny requests for waiver of such claims regardless of the aggregate amount of the claim, as provided by 4 CFR parts 91, 92, and 93. Redelegation of this authority may be made only to the level of Regional Director or District Commander.

(9) Settle and pay claims by employees for personal property losses as provided by 31 U.S.C. 3721. This authority may be redelegated only to Office Directors, Regional Directors, District Commanders, or other comparable levels and to those individuals that report to the above officials.

(10) Exercise the authority of the Secretary to resolve informal allegations of discrimination arising in or relating to their respective organizations through Equal Employment Opportunity counseling or the Alternative Dispute Resolution process and to develop and implement affirmative action and diversity plans within their respective organizations. With regard to external civil rights programs, each Administrator exercises authority pursuant to statutes, regulations, executive orders, or delegations in subpart C of this part to carry out these programs, under the general policy guidance of the Director of the Departmental Office of Civil Rights, including conducting compliance reviews and other activities relating to the enforcement of these statutes, regulations, and executive orders.

(11) Review and approve for payment any voucher for $25 or less the authority for payment of which is questioned by a certifying or disbursing officer.

(12) Authorize and approve official non-foreign travel and transportation for themselves, their subordinates, and others performing services for, or in cooperation with, their operating administrations. Additionally, heads of operating administrations, through a redelegation from the Deputy Secretary, may authorize and approve routine operational foreign travel, as defined in DOT 1500.6A, Travel Manual, of 1–2–85. These authorities may be redelegated in accordance with regulations issued by the Assistant Secretary for Administration.

(13) Exercise the authority of the Secretary to make certifications, findings and determinations under the Regulatory Flexibility Act (Pub. L. 96–354) with regard to any rulemaking document for which issuance authority is delegated by other sections in this part. This authority may be redelegated to those officials to whom document issuance authority has been delegated.

(14) Carry out the functions vested in the Secretary by section 2 of the Federal Technology Transfer Act of 1986, (Pub. L. No. 99–502; 15 U.S.C. 3710a), which authorizes agencies to permit their laboratories to enter into cooperative research and development agreements.

(15) Compromise, suspend collection action on, or terminate claims of the United States not exceeding $100,000

(excluding interest) that are referred to, or arise out of the activities of, his or her Operating Administration;

(16) Compromise, suspend collection action on, or terminate claims against the United States not exceeding $100,000 (excluding interest) that are referred to, or arise out of the activities of, his or her Operating Administration; *provided that* when the Administrator believes that a claim against the United States presents a novel question of law or of policy, he or she shall obtain the advice of the Assistant Attorney General in charge of the Civil Division; and *provided further that* whenever he or she settles any administrative claim against the United States for an amount in excess of $50,000, the Administrator shall prepare a memorandum fully explaining the basis for the action taken and send a copy of the memorandum to the Director, Federal Torts Claims Act Staff, Torts Branch of the Civil Division, U.S. Department of Justice.

(17) Enter into memoranda of understanding with the Occupational Safety and Health Administration (OSHA) in regard to setting and enforcing occupational safety or health standards for employees in DOT-regulated industries. The General Counsel shall concur in each memorandum of understanding with OSHA prior to its execution by the Administrator of the operating administration concerned.

(18) Exercise the authority vested in the Secretary by Section 329A of the Department of Transportation and Related Agencies Appropriations Act, 1995, Pub. L. No. 103–331, §329A, 108 Stat. 2471, 2493 (September 30, 1994), to enter into grants, cooperative agreements, and other transactions with any person, agency, or instrumentality of the United States, any unit of state or local government, any educational institution, and any other entity in execution of the Technology Reinvestment Project authorized under the Defense Conversion, Reinvestment, and Transition Assistance Act of 1992, Pub. L. No. 102–484, 106 Stat. 2658 (October 23, 1992), and related legislation.

(19) Carry out the functions vested in the Secretary by 49 U.S.C. 40119(b), as implemented by 49 CFR part 15, relating to the determination that information is Sensitive Security Information within their respective organizations.

(b) Except as otherwise specifically provided, each official to whom authority is granted by §1.45 through 1.53, 1.66, 1.68, and 1.73 may redelegate and authorize successive redelegations of that authority within the organization under that official's jurisdiction.

(c) Except as provided in §§1.48 and 1.59 and 49 CFR 25.302, the functions, powers, and duties of the Secretary of Transportation, with respect to the Uniform Relocation Assistance and Real Property Acquisition Act of 1970, Public Law 91–646, 84 Stat. 1984, are delegated to:

(1) The head of each of the following Operating Administrations with respect to programs administered by their respective organizations:

(i) Federal Aviation Administration;

(ii) Federal Highway Administration;

(iii) Federal Railroad Administration;

(iv) Federal Transit Administration;

(v) National Highway Traffic Safety Administration;

(vi) St. Lawrence Seaway Development Corporation;

(vii) Maritime Administration; and

(viii) Federal Motor Carrier Safety Administration.

(2) [Reserved]

(d) Each office to whom authority is delegated by either §1.45(c) or §1.59(p) may redelegate and authorize successive redelegations of that authority within the organization under the Administrators' or Assistant Secretary for Administration's jurisdiction.

(e) Each office to whom authority is delegated by either §1.45(c) or §1.59(p) may prescribe additional procedures, requirements and regulations that are appropriate to the particular programs administered by the preparing official's organization, provided:

(1) Any such additional guidance is not inconsistent with the Act, 49 CFR part 25 or subpart C of this manual;

(2) Any such additional guidance is approved prior to issuance by the Federal government's designated lead agency, the Federal Highway Administration (see §1.48(cc)), in coordination with the Assistant Secretary for Transportation Policy.

[Amdt. 1–113, 40 FR 43901, Sept. 24, 1975]

EDITORIAL NOTE: For FEDERAL REGISTER citations affecting §1.45, see the List of CFR Sections Affected which appears in the Finding Aids section of the printed volume and on GPO Access.

§ 1.46 Delegations to the Administrator of the Research and Innovative Technology Administration.

The Administrator of the Research and Innovative Technology Administration is delegated authority for the following:

(a) *Coordination of Departmental research and development programs and activities.* (1) Coordinate, facilitate, and review all Departmental research and development programs and activities, except as limited by section 4(b)(1) of the Norman Y. Mineta Research and Special Programs Improvement Act (Pub. L. 108–426, 118 Stat. 2423).

(2) After consultation with modal and OST offices, RITA shall make recommendations to the Secretary on all modal and OST research budgets.

(b) *Science and technology.* (1) With respect to scientific and technological matters, serve as principal advisor to the Secretary and representative of the Department to the academic community, the private sector, professional organizations, and other Government agencies.

(2) Serve as principal liaison official for the Department of Transportation with the Office of Science and Technology Policy in the Executive Office of the President, the National Science and Technology Council, and the President's Committee of Advisors on Science and Technology.

(3) Serve as primary official responsible for coordination and oversight of the Department's implementation of section 2 of the Federal Technology Transfer Act of 1986 (15 U.S.C. 3710a), relating to the transfer of Federal technology to the marketplace; and section 12(d) of the National Technology Transfer and Advancement Act of 1996 (Pub. L. 104–113), as implemented by OMB Circular A–119: Federal Participation in the Development and Use of Voluntary Consensus Standards and in Conformity Assessment Activities.

(4) Serve as Chair and Executive Secretary of the Department of Transportation's Research, Development and Technology Planning Council.

(5) Serve as Chair and Executive Secretary of the Department of Transportation Research, Development and Technology Planning Team.

(6) Carry out the functions vested in the Secretary by section 5108 of the Transportation Equity Act for the 21st Century (23 U.S.C. 508), as extended by the Surface Transportation Extension Act of 2004, Part V, Public Law 108–310, September 30, 2004, 118 Stat. 1144.

(7) Advocate Department of Transportation policy and program coordination efforts associated with transportation research.

(8) Represent the Department of Transportation on departmental, national and international committees and meetings dealing with transportation R&D.

(9) Manage the strategic planning process for transportation R&D across the Department of Transportation and, through the National Science and Technology Council, across the Federal Government.

(10) Conduct transportation system-level assessments and policy research.

(11) Facilitate the creation of transportation public/private partnerships.

(12) Foster innovation in the transportation sector.

(13) Disseminate information on departmental, national, and international transportation R&D activities.

(14) Manage and coordinate a nationwide program of transportation research, education and technology transfer through grants to university transportation centers and foster university participation in the planning, conduct and analysis of transportation research.

(15) Manage department- and government-wide (inter/multimodal) transportation R&D programs.

(16) Oversee advisory boards that deal with transportation system-level R&D assessments and issues, such as the National Research Council Committee on the Federal Transportation R&D Strategic Planning Process.

(c) *Advanced vehicle technology.* Carry out the functions vested in the Secretary by section 5111 of the Transportation Equity Act for the 21st Century

(49 U.S.C. 5506), as extended by the Surface Transportation Extension Act of 2004, Part V, Public Law 108–310, September 30, 2004, 118 Stat. 1144, and section 5513(j) of the Safe, Accountable, Flexible, Efficient Transportation Equity Act: A Legacy for Users, Title V, Subtitle E, Public Law 109–59, August 10, 2005, 119 Stat. 1144.

(d) *Remote sensing technology.* Carry out the functions vested in the Secretary by section 5113 of the Transportation Equity Act for the 21st Century (23 U.S.C. 502 Note), as extended by the Surface Transportation Extension Act of 2004, Part V, Public Law 108–310, September 30, 2004, 118 Stat. 1144, and section 5506 of the Safe, Accountable, Flexible, Efficient Transportation Equity Act: A Legacy for Users, Title V, Subtitle E, Public Law 109–59, August 10, 2005, 119 Stat. 1144.

(e) *University transportation research.* Carry out the functions vested in the Secretary by section 5110 of the Transportation Equity Act for the 21st Century (49 U.S.C. 5505), as extended by the Surface Transportation Extension Act of 2004, Part V, Public Law 108–310, September 30, 2004, 118 Stat. 1144, and sections 5401 and 5402 of the Safe, Accountable, Flexible, Efficient Transportation Equity Act: A Legacy for Users, Title V, Subtitle D, Public Law 109–59, August 10, 2005, 119 Stat. 1144.

(f) *Volpe National Transportation Systems Center.* Exercise the authority vested in the Secretary with respect to the activities of the Volpe National Transportation Systems Center and carry out the functions vested in the Secretary by 49 U.S.C. 328 with respect to the working capital fund for financing the activities of the Volpe National Transportation Systems Center.

(g) *Transportation Safety Institute.* Exercise authority over the Transportation Safety Institute.

(h) *Transportations Statistics.* Exercise the authority and carry out the functions vested in the Secretary by 49 U.S.C. 112(d)(1)(C) relating to transportation statistics, analysis, and reporting.

(i) *Intermodalism.* Carry out the functions vested in the Secretary by 49 U.S.C. 5503(d) and Section 4149 of the Safe, Accountable, Flexible, Efficient Transportation Equity Act: A Legacy for Users, Title IV, Subtitle A and Section 5209, Title V, Subtitle B, Public Law 109–59, August 10, 2005, 119 Stat. 1144.

(j) *Aviation information.* (1) Carry out the functions vested in the Secretary by 49 U.S.C. 329(b)(1) relating to the collection and dissemination of information on civil aeronautics.

(2) Carry out the functions vested in the Secretary by section 4(a)(7) of the Civil Aeronautics Board Sunset Act of 1984 (October 4, 1984; Pub. L. 98–443) relating to the reporting of the extension of unsecured credit to political candidates (section 401, Federal Election Campaign Act of 1971; 2 U.S.C. 451), in conjunction with the General Counsel and the Assistant Secretary for Aviation and International Affairs.

(3) Carry out the functions vested in the Secretary by: 49 U.S.C. 40113 (relating to taking such actions and issuing such regulations as may be necessary to carry out responsibilities under the Act), 49 U.S.C. 41702 (relating to the duty of carriers to provide safe and adequate service), 49 U.S.C. 41708 and 41709 (relating to the requirement to keep information and the forms in which it is to be kept), and 49 U.S.C. 41701 (relating to establishing just and reasonable classifications of carriers and rules to be followed by each) as appropriate to carry out the responsibilities under this paragraph in conjunction with the General Counsel and the Assistant Secretary for Aviation and International Affairs.

(k) *Hazardous materials information.* In coordination with the Under Secretary for Transportation Policy, work with the Operating Administrations to determine data needs, collection strategies, and analytical techniques appropriate for implementing 49 U.S.C. 5101 *et seq.*

(l) *Research grants.* Carry out the functions vested in the Secretary by section 5513(c), (d), (g), (h), (i), (l), and (m) (as (m) relates to (c), (d), (g), (h), (i), (j), and (l)) of the Safe, Accountable, Flexible, Efficient Transportation Equity Act: A Legacy for Users, Title V, Subtitle E, Public Law 109–59, August 10, 2005, 119 Stat. 1144.

(m) *Biobased transportation research.* Carry out the functions vested in the Secretary by section 5201(m) of the

Safe, Accountable, Flexible, Efficient Transportation Equity Act: A Legacy for Users, Title V, Subtitle B, Public Law 109–59, August 10, 2005, 119 Stat. 1144.

(n) *Transportation research and development strategic planning.* Carry out the function vested in the Secretary by Section 5208 of Public Law 109–59, 119 Stat. 1144 (Aug. 10, 2005).

[70 FR 8300, Feb. 18, 2005, as amended at 71 FR 30830, May 31, 2006; 71 FR 52753, Sept. 7, 2006]

§ 1.47 Delegations to Federal Aviation Administrator.

The Federal Aviation Administrator is delegated authority to:

(a) Carry out the powers and duties transferred to the Secretary of Transportation by, or subsequently vested in the Secretary by virtue of, section 6(c)(1) of the Department of Transportation Act (49 U.S.C. 1655(c)(1)), including those pertaining to aviation safety (except those related to transportation, packaging, marking, or description of hazardous materials) and vested in the Secretary by section 308(b) of title 49 U.S.C. and sections 306–309, 312–314, 1101, 1105, and 1111 and titles VI, VII, IX (excluding section 902(h)), and XII of the Federal Aviation Act of 1958, as amended.

(b) Carry out title XIII of the Federal Aviation Act of 1958, as amended (72 Stat. 800; 49 U.S.C. 1531 *et seq.*), relating to aviation insurance.

(c) Carry out the functions vested in the Secretary by the Act of September 7, 1957 (71 Stat. 629; 49 U.S.C. 1324 note), as amended by section 6(a)(3)(B) of the Department of Transportation Act, relating to the guarantee of aircraft purchase loans, and those functions which relate to the issuance of obligations to finance the expenses of such guarantees.

(d) Administer Executive Orders 11419 and 11322 relating to prohibited aviation operations and the prohibited carriage of commodities and products to and from Southern Rhodesia. Carry out the functions vested in the Secretary by Executive Order 12183.

(e) Provide certain facilities and services to FAA employees and their dependents at remote locations (49 U.S.C. 1659).

(f) Carry out the functions vested in the Secretary by:

(1) The Airport and Airway Development Act of 1970, as amended (49 U.S.C. 1701 *et seq.*), except sections 3 and 4 (49 U.S.C. 1702, 1703).

(2) Sections 208 and 209 of the Airport and Airway Revenue Act of 1970, as amended (49 U.S.C. 1742, 1742 note); and

(3) Sections 21, 22, 23(b), 24, and 25 of the Airport and Airway Development Act Amendments of 1976 (49 U.S.C. 1346(a), 1348 note, 1713 note, 1356a, 1704).

(g) Carry out the functions vested in the Secretary by part B of title II of the Clean Air Act, as amended (84 Stat. 1703), and by 40 CFR part 87 as it relates to exemptions from aircraft air pollution standards.

(h) Carry out the functions of the Secretary under section 208 of the Appalachian Regional Development Act of 1965 (85 Stat. 168; 40 U.S.C. App. 208).

(i) Carry out the functions vested in the Secretary by section 902(h)(2) of the Federal Aviation Act of 1958, as amended, as it relates to enforcement of hazardous materials regulations as they apply to the transportation or shipment of such materials by air.

(j)(1) Except as delegated by § 1.74(a), carry out the functions vested in the Secretary by 49 U.S.C. 5121(a), (b), (c), and (d), 5122, 5123, and 5124, with particular emphasis on the transportation or shipment of hazardous materials by air.

(2) Carry out the functions vested in the Secretary by 49 U.S.C. 5114 as it relates to the establishment of procedures for monitoring and enforcing provisions of regulations with respect to the transportation of radioactive materials on passenger-carrying aircraft.

(k) [Reserved]

(l) Serve, or designate a representative to serve, as Vice Chairman and alternate Department of Transportation member of the Interagency Group on International Aviation (IGIA) pursuant to interagency agreement of December 9, 1960, and Executive Order 11382, and provide for the administrative operation of the IGIA Secretariat.

(m) Carry out the functions vested in the Secretary by sections 4(a) and 5(c) of Executive Order 12316 of August 14, 1981 (46 FR 42237, Aug. 20, 1981) (delegating sections 107(c)(1)(c) and 108(b),

respectively, of the Comprehensive Environmental Response, Compensation, and Liability Act of 1981, Pub. L. 96–510), insofar as they relate to aircraft.

(n) Carry out the functions vested in the Secretary by section 3(d) of the Act to Prevent Pollution from Ships (33 U.S.C. 1902(d)) as it relates to ships owned or operated by the Federal Aviation Administration when engaged in noncommercial service.

(o) [Reserved]

(p) Carry out the functions vested in the Secretary by:

(1) Section 553(b) of Public Law 99–83 (99 Stat. 226), which relates to the authority of Federal Air Marshals to carry firearms and make arrests, in coordination with the General Counsel; and

(2) The following subsections of section 1115 of the Federal Aviation Act of 1958, as amended, which relates to the security of foreign airports: Subsection 1115(a), in coordination with the General Counsel and the Assistant Secretary for Aviation and International Affairs; subsection 1115(b), in coordination with the Assistant Secretary for Aviation and International Affairs; and subsection 1115(e)(2)(A)(ii), in coordination with the General Counsel and the Assistant Secretary for Aviation and International Affairs.

(q) Carry out all of the functions vested in the Secretary under section 404(d) of the Federal Aviation Act of 1958 (49 U.S.C. 1374(d)), as amended by section 328(a) of the Department of Transportation and Related Agencies Appropriations Act of 1988 (Pub. L. 100–202).

(r) Carry out the functions vested in the Secretary by the Airport Safety and Capacity Expansion Act of 1990, title IX, subtitle B of the Omnibus Budget Reconciliation Act of 1990, Public Law 101–508 (except those functions vested in the Secretary by sections 9113, 9125, 9127 and 9130).

(s) Carry out functions vested in the Secretary by Airport Noise and Capacity Act of 1990, title IX, subtitle D of the Omnibus Budget Reconciliation Act of 1990, Public Law 101–508.

(t) Carry out the functions vested in the Secretary by sections 321 and 410 of the Federal Aviation Act, as amended by the Aviation Security Improvement Act of 1990, Public Law 101–604, November 16, 1990.

(u) Carry out the functions assigned to the Secretary by Executive Order 12465 (February 24, 1984) (3 CFR, 1984 Comp., p. 163) relating to commercial expendable launch vehicle activities.

(v) Carry out the functions vested in the Secretary by 49 U.S.C. Subtitle IX.

(w) Carry out the functions vested in the Secretary by the National Aeronautics and Space Administration Authorization Act, Fiscal Year 1993 (Pub. L. 102–588, 106 Stat 5119, November 4, 1992).

(Secs. 3(e), 6(c), and 9(e), Department of Transportation Act (49 U.S.C. 1652(e), 1655(c), and 1657(e)); 49 U.S.C. 322; 49 CFR 1.57(l))

[Amdt. 1–113, 40 FR 43901, Sept. 24, 1975]

EDITORIAL NOTE: For FEDERAL REGISTER citations affecting §1.47, see the List of CFR Sections Affected which appears in the Finding Aids section of the printed volume and on GPO Access.

§ 1.48 Delegations to Federal Highway Administrator.

(a) Unless otherwise provided, the Federal Highway Administrator may further delegate authority provided under this section.

(b) The Federal Highway Administrator is delegated authority to administer the following provisions of title 23, Highways, U.S.C.:

(1) Chapter 1, Federal-Aid Highways, except for sections 142 (as it relates to matters within the primary responsibility of the Federal Transit Administrator), 153, 154, 158, 159, 161, and 164.

(2) Chapter 2, Other Highways.

(3) Chapter 3, General Provisions, except for section 322.

(4) Section 409 of chapter 4, Highway Safety.

(5) Chapter 5, Research, Technology, and Education, except for sections 508 and 509.

(6) Chapter 6, Infrastructure Finance.

(c) The Federal Highway Administrator is delegated authority to administer the following laws relating generally to highways:

(1) Section 502(c) of the General Bridge Act of 1946, as amended (60 Stat. 847, 33 U.S.C. 525(c)).

(2) Reorganization Plan No. 7 of 1949 (63 Stat. 1070).

(3) The Federal-Aid Highway Act of 1954, as amended (Pub. L. 83–350, 68 Stat. 70).

(4) The Federal-Aid Highway Act of 1956, as amended (Pub. L. 84–627, 70 Stat. 374).

(5) The Highway Revenue Act of 1956, as amended (Pub. L. 84–627, 70 Stat. 374, 387, 23 U.S.C.A. 120 note).

(6) The Alaska Omnibus Act, as amended (Pub. L. 86–70, 73 Stat. 141, 48 U.S.C.A. 21 note.).

(7) The Act of September 26, 1961, as amended (Pub. L. 87–307, 75 Stat. 670).

(8) The Act of April 27, 1962 (Pub. L. 87–441, 76 Stat. 59).

(9) The Federal-Aid Highway Act of 1962, as amended (Pub. L. 87–866, 76 Stat. 1145).

(10) The Joint Resolution of August 28, 1965, as amended (Pub. L. 89–139, 79 Stat. 578, 23 U.S.C.A. 101 et seq., notes).

(11) The Highway Beautification Act of 1965, as amended (Pub. L. 89–285, 79 Stat. 1028, 23 U.S.C.A. 131 et seq., notes).

(12) The Federal-Aid Highway Act of 1966, as amended (Pub. L. 889–574, 80 Stat. 766).

(13) The Federal-Aid Highway Act of 1968, as amended (Pub. L. 90–495, 82 Stat. 815).

(14) The Federal-Aid Highway Act of 1970, as amended (except section 118) (Pub. L. 91–605, 84 Stat. 1713).

(15) Sections 103, 104, 111(b), 128(b), 131, 135, 136, 141, 147, 149, 154, 158 through 161, 163, 203, 206, 401, and 402 of the Federal-Aid Highway Act of 1973, as amended (Pub. L. 93–87, 87 Stat. 250; Pub. L. 93–643, 88 Stat. 2281).

(16) Sections 102(b) (except subparagraph (2)) and (c); 105 (b)(1) and (c); 141; 146; 147; and 152 of the Federal-Aid Highway Act of 1976 (Pub. L. 94–280, 90 Stat. 425).

(17) Sections 105, 107(c) through (e), 123(a) and (b), 124(c), 126(d) through (g), 138(c), 140, 142 through 145, 147 through 154, 167, and 171, title IV, as amended (as it relates to matters within the primary responsibility of the Federal Highway Administrator), and sections 502–504 of title V of the Surface Transportation Assistance Act of 1978 (Pub. L. 95–599, 92 Stat. 2689).

(18) The Federal-Aid Highway Act of 1982 (Pub. L. 97–327, 96 Stat. 1611), except section 6 as it relates to matters within the primary responsibility of the Federal Transit Administrator.

(19) The Surface Transportation Assistance Act of 1982, as amended, (Pub. L. 97–424, 96 Stat. 2097) except,

(i) Sections 165 and 531 as they relate to matters within the primary responsibility of the Federal Transit Administrator;

(ii) Sections 105(f), 413; 414(b) (2); 421, 426, and title III; and

(iii) Section 414(b)(1), unless with the concurrence of the National Highway Traffic Safety Administrator.

(20) Sections 103(e), 105(a) through (g), 106(a), and (b), 110(b), 114(d), 117(f), 120(c) and (d), 123(g) and (i), 133(f), 134, 136, 137, 139 through 145, 146(b), 147(c), 149(a) through (f), (h), (i), (k), 151 through 157, 164, and 208 of the Surface Transportation and Uniform Relocation Assistance Act of 1987 (Pub. L. 100–17, 101 Stat. 132).

(21) Sections 1002(c) and (e), 1003(c), 1004, 1006(h), 1009(c), 1012(b) and (d) through (f), 1013(c), 1014(c), 1015, 1016(g), 1017(c), 1021(c) and (d), 1022(c), 1023(f) through (g), 1029(c), (f), and (g), 1032(d) and (e), 1038 through 1042, 1044, 1045, 1046(d), 1047, 1049, 1050, 1051, 1054, 1057 through 1063, 1065, 1067, 1069, 1072, 1073, 1074, 1076, 1077, 1086, 1088 through 1092, 1097, 1099 through 1108, 6012, and 6014 through 6016 of the Intermodal Surface Transportation Efficiency Act of 1991 (Pub. L. 102–240, 105 Stat. 1914).

(22) Sections 201 through 205, 327 through 336, 339, 340, 349, 352, 353, and 408 of the National Highway System Designation Act of 1995 (Pub. L. 104–59, 109 Stat. 568).

(23) Sections 1101(a), 1102, 1103(m) and (n), 1106(a) and (d), 1107(c), 1108(f) and (g), 1110(d)(2) and (e), 1112(c) and (e), 1117(a), (b), and (d), 1118, 1119, 1202(b) and (e), 1204(i), 1207(c), 1210, 1211(i) and (l), 1212 (b), (e) through (j), (l), (m), (o), and (q) through (t), 1213(c), and (f) through (j), 1214, 1215, 1216, 1217, 1220, 1223, 1224, 1225, 1307(d) through (f), 1308, 1309, 1311, 1402, 1511, 5001, 5112, 5116 through 5118, and 5203 through 5212 of the Transportation Equity Act for the 21st Century (Pub. L. 105–178, 112 Stat. 107).

(24) Sections 1102, 1105(f), 1109(f), 1111(b)(4), 1112, 1115(c), 1116(a) and (b), 1117, 1119(n), 1120(c), 1201, 1301, 1302, 1303, 1304, 1305, 1306, 1308, 1310, 1401(e),

1402, 1403, 1404, 1405, 1408, 1409(a) and (b), 1410, 1411, 1502, 1603, 1604, 1801 (d), 1803, 1804, 1805, 1807, 1808(g) through (k), 1907, 1908, 1910, 1911, 1914, 1916, 1917, 1918, 1919, 1923, 1924, 1925, 1927, 1928, 1934, 1935, 1936, 1937, 1939, 1940, 1941, 1943, 1944, 1945, 1948, 1949, 1950, 1952, 1957, 1958, 1959, 1961, 1962, 1964, 2003(e), 4112, 4141, 4404 (as it relates to matters within the primary responsibility of the Federal Highway Administrator), 5101(b), 5202(b)(3)(B), (c), and (d), 5203(e) and (f), 5204(g) and (i), 5304, 5305, 5306, 5307, 5308, 5309 (except (c)(4)), 5501, 5502, 5504, 5507, 5508, 5511, 5512, 5513(b), (f), (k), and (m) (as (m) relates to (b), (f), and (k)), 5514, 6001(b), 6002(b), 6009(b) and (c) (as they relate to matters within the primary responsibility of the Federal Highway Administrator), 6010 (as it relates to matters within the primary responsibility of the Federal Highway Administrator), 6017, 6018, 10210, and 10212 of the Safe, Accountable, Flexible, Efficient Transportation Equity Act: A Legacy for Users (Pub. L. 109–59, 119 Stat. 1144).

(d) The Federal Highway Administrator is delegated authority to:

(1) Carry out the functions vested in the Secretary of Transportation by section 601 of the Pipeline Safety Act of 1992 (Pub. L. 102–508, 106 Stat. 3289) relating to construction of the Page Avenue Extension Project in Missouri.

(2) Carry out the functions of the Secretary under the Appalachian Regional Development Act of 1965 (Pub. L. 89–4, 79 Stat. 5, 40 U.S.C. Subtitle IV) except section 208.

(3) Carry out the Act of September 21, 1966, Public Law 89–599, relating to certain approvals concerned with a compact between the States of Missouri and Kansas.

(4) Carry out the law relating to the Chamizal border highway (Pub. L. 89–795, 80 Stat. 1477).

(5) Carry out the Highway Safety Act of 1966, as amended (Pub. L. 89–564, 80 Stat. 731) and chapter 4 of title 23 U.S.C. as amended by section 207 of the Surface Transportation Assistance Act of 1978 for highway safety programs, research and development relating to highway design, construction and maintenance, traffic control devices, identification and surveillance of accident locations, and highway-related aspects of pedestrian and bicycle safety.

(6) Exercise the authority vested in the Secretary by 49 U.S.C. 20134(a) with respect to the laws administered by the Federal Highway Administrator pertaining to highway safety and highway construction.

(7) Carry out the functions vested in the Secretary by section 5 (as it relates to bridges, other than railroad bridges, not over navigable waters), and section 8(a) (as it relates to all bridges other than railroad bridges) of the International Bridge Act of 1972 (Pub. L. 92–434, 86 Stat. 731).

(8) Exercise the authority vested in the Secretary by sections 101, 118, 120(b), 123 and 124 of the Federal-Aid Highway Amendments of 1974 (Pub. L. 93–643, January 4, 1975, 88 Stat. 2281).

(9) Carry out the functions vested in the Secretary by section 118 of the National Visitor Center Facilities Act of 1968 (Pub. L. 90–264, 82 Stat. 43), as added by the Union Station Redevelopment Act of 1981 (Pub. L. 97–125; 95 Stat. 1672), with respect to the completion of the parking facility and associated ramps at Union Station in Washington, DC (40 U.S.C. 818).

(10) Carry out the functions vested in the Secretary by Public Law 98–229, 98 Stat. 55, insofar as it relates to apportioning certain funds for construction of the Interstate Highway System in Fiscal Year 1985, apportioning certain funds for Interstate substitute highway projects, and increasing amounts available for emergency highway relief.

(11) Prescribe regulations, as necessary, at parts 24 and 25 of this title, to implement Public Law 91–646, 84 Stat. 1894, and any amendments thereto, as appropriate, in coordination with the Assistant Secretary for Transportation Policy, and carry out all other functions vested in the Secretary by the Uniform Relocation Assistance and Real Property Acquisition Policies Act of 1970, Public Law 91–646, 84 Stat. 1894, and any amendments thereto.

(12) Carry out the functions vested in the Secretary of Transportation by section 114 of Part C of the Paperwork Reduction Reauthorization Act of 1986 (contained in the Act Making Continuing Appropriations for Fiscal Year 1987 and for Other Purposes, Public

Law 99–591, 100 Stat. 3341, 2241–349), relating to construction of Interstate Highway H–3 in Hawaii.

(13) Carry out all of the functions vested in the Secretary under section 324 of the Fiscal Year 1986 Department of Transportation Appropriations Act (Pub. L. 99–190, 99 Stat. 1288), notwithstanding the reservation of authority under Sec. 1.44(j) of this part.

(14) Carry out the functions vested in the Secretary of Transportation by section 505 of the Railroad Revitalization and Regulatory Reform Act of 1976, as amended, (Pub. L. 94–210, 90 Stat. 31) relating to the Alameda Corridor Project in consultation with the Federal Railroad Administrator.

(15) Carry out the function of acting as the lead DOT agency in matters relating to the National Environmental Policy Act pertinent to the authority vested in the Secretary to establish, operate, and manage the Nationwide Differential Global Positioning System (NDGPS) by section 346 of the Department of Transportation and Related Agencies Appropriations Act, 1998 (Pub. L. 105–66, 111 Stat. 1425).

(16) Exercise the responsibilities of the Secretary under 49 U.S.C. 303 as it relates to matters within the primary responsibility of the Federal Highway Administrator.

(17) Exercise the responsibilities of the Secretary under the National Environmental Policy Act of 1969 (42 U.S.C. 4321 et seq.) and other Federal laws related to programs, projects, and activities administered by the Federal Highway Administration.

(18) Exercise the responsibilities of the Secretary under section 176(c) of the Clean Air Act (42 U.S.C. 7506(c)), as amended by section 6011 of the Safe, Accountable, Flexible, Efficient Transportation Equity Act: A Legacy for Users (Pub. L. 109–59, 119 Stat. 1144), as it relates to matters within the primary responsibility of the Federal Highway Administrator.

(19) Exercise the responsibilities of the Secretary under 49 U.S.C. 309.

[71 FR 30830, May 31, 2006]

§ 1.49 Delegations to Federal Railroad Administrator.

The Federal Railroad Administrator is delegated authority to:

(a) Investigate and report on safety compliance records of applicants seeking railroad operating authority from the Interstate Commerce Commission, and to intervene and present evidence concerning applicants' fitness in Commission proceedings under 49 U.S.C. 1653(e), relating to railroads.

(b) Carry out the Act of September 30, 1965, as amended (79 Stat. 893, 49 U.S.C. 1631 *et seq.*), relating generally to high speed ground transportation, except issuance of reports required by section 13(c) (49 U.S.C. 1643(c)).

(c) Carry out the following laws relating generally to safety appliances and equipment on railroad engines and cars, and protection of employees and travelers:

(1) The Act of March 2, 1893, as amended (27 Stat. 531, 45 U.S.C. 1 *et seq.*);

(2) The Act of March 2, 1903, as amended (32 Stat. 943, 45 U.S.C. 8 *et seq.*);

(3) The Act of April 14, 1910, as amended (36 Stat. 298, 45 U.S.C. 11 *et seq.*);

(4) The Act of May 30, 1908, as amended (35 Stat. 476, 45 U.S.C. 17 *et seq.*);

(5) The Act of February 17, 1911, as amended (36 Stat. 913, 45 U.S.C. 22 *et seq.*);

(6) The Act of March 4, 1915, as amended (38 Stat. 1192, 45 U.S.C. 30);

(7) Reorganization Plan No. 3 of 1965 (79 Stat. 1320, 45 U.S.C. 22 note);

(8) Joint Resolution of June 30, 1906, as amended (34 Stat. 838, 45 U.S.C. 35);

(9) The Act of May 27, 1908, as amended (35 Stat. 325, 45 U.S.C. 36 *et seq.*);

(10) The Act of March 4, 1909, as amended (35 Stat. 965, 45 U.S.C. 37); and

(11) The Act of May 6, 1910, as amended (36 Stat. 350, 45 U.S.C. 38 *et seq.*).

(d) Carry out the Act of March 4, 1907, as amended (34 Stat. 1415, 45 U.S.C. 61 *et seq.*), relating generally to hours of service of railroad employees.

(e) Carry out the functions vested in the Secretary by section 5 of the International Bridge Act of 1972 (Pub. L. 92–434) as it relates to railroad bridges not over navigable waterways.

(f) Carry out section 25 of the Interstate Commerce Act, as amended (49 U.S.C. 26), relating generally to railroad safety appliances, methods, and systems.

(g) Exercise the administrative powers under the Interstate Commerce Act with respect to powers and duties pertaining to railroad safety transferred to the Secretary (49 U.S.C. 1655(f)).

(h) Operate and administer the Alaska Railroad under the Act of March 12, 1914, as amended (38 Stat. 305), and Executive Order 11107 (28 FR 4225 (1963)).

(i) Make individual and general changes in freight rates and passenger fares for the Alaska Railroad, without power to redelegate authority for general changes in freight rates and passenger fares.

(j) Promote and undertake research and development relating to rail matters generally (49 U.S.C. 1653(a), 1657(e)(1), 1657(n)(1), and 1657(q)(1)).

(k) Carry out the functions vested in the Secretary by subtitle B of the National Visitor Center Facilities Act of 1968, as added by the Union Station Redevelopment Act of 1981 (Pub. L. 97–125; 95 Stat. 1667) except section 114(e) and such parts of section 118 as provided for the completion of the parking facility and associated ramps at Union Station in Washington, DC.

(l) Exercise the authority vested in the Secretary by the Emergency Rail Services Act of 1970 (Pub. L. 91–663) except the authority to make findings required by section 3(a) of that Act and the authority to sign guarantees of certificates issued by trustees.

(m) Carry out the functions vested in the Secretary by the Federal Railroad Safety Act of 1970 (title II of Pub. L. 91–458); 84 Stat. 971, 45 U.S.C. 421 et. seq.), except section 204(b) (84 Stat. 972, 45 U.S.C. 433(b)) with respect to highway, traffic, and motor vehicle safety and highway construction.

(n) Carry out the functions vested in the Secretary by the Emergency Rail Facilities Restoration Act of 1972 (Pub. L. 92–591).

(o) Carry out the functions vested in the Secretary by subsection (b) (except as it relates to conducting consultations with the Administrator of the Environmental Protection Agency) and (c) of section 17 of the Noise Control Act of 1972 (Pub. L. 92–574).

(p) Carry out the functions vested in the Secretary by sections 201(i)(3); 202(b)(7); 203, except authority to issue subpoenas; 210; 212; 213; 215; 402; 403; and 601 of the Regional Rail Reorganization Act of 1973 (Pub. L. 93–236) as amended by the Rail Transportation Improvement Act (Pub. L. 94–555).

(q) Carry out the functions vested in the Secretary by subsections 4 (h) and (i) of the Department of Transportation Act, as amended (49 U.S.C. 1653(h), (i)).

(r) [Reserved]

(s) Except as delegated by §1.74(a), carry out the functions vested in the Secretary by 49 U.S.C. 5121(a), (b), (c) and (d), 5122, 5123, and 5124, with particular emphasis on the transportation or shipment of hazardous materials by railroad.

(t) Carry out the functions vested in the Secretary by sections 204(c); except authority to issue subpoenas; 402; 403; 502; 503; 504; 505; 506, except (c); 507; 508; 511; 512; 513; 515; 517; 606; 610; 703; 704, except (c)(1); and 705; 707; 901; 905, as applicable, of the Railroad Revitalization and Regulatory Reform Act of 1976, as amended, section 5 of the Department of Transportation Act (49 U.S.C. 1654), except authority to issue subpoenas.

(u) Carry out functions vested in the Secretary by sections 17(a) and (b) (as they relate to consultations with the Administrator of the Environmental Protection Agency) of the Noise Control Act of 1972 (Pub. L. 92–574, 49 U.S.C. 1431).

(v) Carry out the functions vested in the Secretary by the Rock Island Railroad Transition and Employee Assistance Act (title I of Pub. L. 96–254) and by section 18 of the Milwaukee Railroad Restructuring Act (49 U.S.C. 916).

(w) Carry out the functions vested in the Secretary by section 305 of the Regional Rail Reorganization Act of 1973, as amended (45 U.S.C. 745).

(x) Carry out the functions vested in the Secretary by sections 4(a) and 5(c) of Executive Order 12316 of August 14, 1981 (46 FR 42237, Aug. 20, 1981) (delegating sections 107(c)(1)(c) and 108(b), respectively, of the Comprehensive Environmental Response, Compensation, and Liability Act of 1981, Pub. L. 96–510), insofar as they relate to rolling stock.

(y) Carry out the functions vested in the Secretary by the Northeast Rail Service Act of 1981 (Pub. L. 97–35).

(z) Carry out the functions vested in the Secretary by section 3 of the Bridge Act of 1906, as amended (33 U.S.C. 493), relating to disputes over the terms and compensation for use of railroad bridges built under the Act.

(aa) Carry out the functions vested in the Secretary by titles II through VII of the Rail Safety and Service Improvement Act of 1982 (Pub. L. 97–468), which relates to rail safety, rail finances, and the transfer of The Alaska Railroad to the State of Alaska.

(bb) Carry out the functions vested in the Secretary by section 4031 of the Budget Reconciliation Act of 1986 (Pub. L. 99–509), which relates to the abolition of the United States Railway Association, and the execution of the functions and duties of the Association transferred to the Secretary, effective April 1, 1987.

(cc) Carry out the functions vested in the Secretary by section 18 (g) and (h) of the Rail Safety Improvement Act of 1988 (Pub. L. 100–342).

(dd) Carry out the function vested in the Secretary by section 1163 of the Bankruptcy Code (11 U.S.C. 1163), which relates to the nomination of trustee for rail carriers in reorganization, with the concurrence of the Office of the General Counsel.

(ee) Carry out the functions vested in the Secretary by section 5701 of title 49 of the United States Code, with respect to transportation by railroad.

(ff) Exercise the authority vested in the Secretary by the Crime Control Act of 1990 (Pub. L. 101–647) as it relates to a railroad police officer's authority to enforce the laws of any jurisdiction in which the police officer's rail carrier employer owns property.

(gg) Carry out the functions vested in the Secretary by sections 16 and 21 of the Hazardous Materials Transportation Uniform Safety Act of 1990 (Pub. L. 101–615; 104 Stat. 3244 (49 App. U.S.C. 1813 note and 1817 note)).

(hh) Exercise the authority vested in the Secretary by Section 601 (d) and (e) of the National and Community Service Act of 1990 (45 U.S.C. 546 note) as it relates to the discharge of human waste from railroad passenger cars.

(ii) Carry out the functions and exercise the authority delegated to the Secretary in section 2(d)(2) of Executive Order 12777 (3 CFR, 1991 Comp.; 56 FR 54757), with respect to rail transportation, relating to the approval of means to ensure the availability of private personnel and equipment to remove, to the maximum extent practicable, a worst case discharge, the review and approval of response plans, and the authorization of railroads, subject to the Federal Water Pollution Control Act (33 U.S.C. 1321), to operate without approved response plans, except as delegated in §1.46(m).

(jj) Exercise the authority vested in the Secretary by the Swift Rail Development Act of 1994, being Title I—High-Speed Rail of Public Law 103–440 (108 Stat. 4615), as it relates to the provision of financial assistance for high-speed rail corridor planning and technology improvements, the promulgation of necessary safety regulations, and the redemption of outstanding obligations and liabilities with respect to the Columbus and Greenville Railway under Sections 505 and 511 of the Railroad Revitalization and Regulatory Reform Act of 1976 (45 U.S.C. 825 and 831, respectively).

(kk) Carry out the functions and exercise the authority vested in the Secretary by 23 U.S.C. 322, titled the Magnetic Levitation Transportation Technology Deployment Program.

(ll) Carry out the function of determining the Federal requirements for the Nationwide Differential Global Positioning System (NDGPS) as a necessary part of the Secretary's authority to establish, operate, and manage the NDGPS granted by Section 346 of Public Law 105–66, titled the Department of Transportation and Related Agencies Appropriations Act, 1998.

(mm) Carry out the functions and exercise the authority vested in the Secretary by sections 1307, 1946, 9004, 9006, and 9007 of the Safe, Accountable, Flexible, Efficient Transportation Equity Act: A Legacy for Users (Pub. L. No. 109–59, 119 Stat. 1144) as they relate to deployment of magnetic levitation transportation projects, the Gateway Rural Improvement Pilot Program, a study of the impact of public safety of train travel in communities without grade separation, capital grants to the Alaska Railroad, and a study of rail transportation and regulation.

(nn) Carry out the functions and exercise the authority vested in the Secretary by section 20154 of title 49, United States Code relating to capital grants for rail line relocation projects.

[Amdt. 1–113, 40 FR 43901, Sept. 24, 1975]

EDITORIAL NOTE: For FEDERAL REGISTER citations affecting §1.49, see the List of CFR Sections Affected which appears in the Finding Aids section of the printed volume and on GPO Access.

§ 1.50 Delegation to the National Highway Traffic Safety Administrator.

The National Highway Traffic Safety Administrator is delegated authority to:

(a) Carry out the National Traffic and Motor Vehicle Safety Act of 1966, as amended (15 U.S.C. 1381 *et seq.*).

(b) Carry out the Highway Safety Act of 1966, as amended (23 U.S.C. 401 *et seq.*), except for highway safety programs, research and development relating to highway design, construction and maintenance, traffic control devices, identification and surveillance of accident locations, and highway-related aspects of pedestrian and bicycle safety.

(c) Exercise the authority vested in the Secretary by section 210(2) of the Clean Air Act, as amended (42 U.S.C. 7544(2)).

(d) Exercise the authority vested in the Secretary by section 204(b) of the Federal Railroad Safety Act of 1970 (45 U.S.C. 433(b)) with respect to laws administered by the National Highway Traffic Safety Administrator pertaining to highway, traffic and motor vehicle safety.

(e) Carry out the Act of July 14, 1960, as amended (23 U.S.C. 313 note) and the National Driver Register Act of 1982 (23 U.S.C. 401 note).

(f) Carry out the functions vested in the Secretary by the Motor Vehicle Information and Cost Savings Act of 1972, as amended (15 U.S.C. 1901 *et seq.*), except section 512.

(g) Administer the following sections of title 23, United States Code, with the concurrence of the Federal Highway Administrator:

(1) 141, as it relates to certification of the enforcement of speed limits;

(2) 154 (a), (b), (d), (e), (f), (g) and (h); and

(3) 158.

(h) Carry out the consultation functions vested in the Secretary by Executive Order 11912, as amended.

(i) Carry out section 209 of the Surface Transportation Assistance Act of 1978, as amended (23 U.S.C. 401 note) and section 165 of the Surface Transportation Assistance Act of 1982, as amended (23 U.S.C. 101 note), with respect to matters within the primary responsibility of the National Highway Traffic Safety Administrator.

(j) Administer section 414(b)(1) of the Surface Transportation Assistance Act of 1982, as amended (49 U.S.C. 2314) with the concurrence of the Federal Highway Administrator, and section 414(b)(2).

(k) Carry out section 2(c) of the Truth in Mileage Act of 1986 (15 U.S.C. 1988 note).

(l) Carry out section 204(b) of the Surface Transportation and Uniform Relocation Assistance Act of 1987, Public Law 100–17 (101 Stat. 132) with the coordination of the Federal Highway Administrator.

(m) Carry out the functions vested in the Secretary by section 15(f) of the Sanitary Food Transportation Act of 1990 (Pub. L. 101–500; 104 Stat. 1213).

(n) Carry out, in coordination with the Federal Motor Carrier Safety Administrator, the authority vested in the Secretary by subchapter III of chapter 311 and section 31502 of title 49, U.S.C., to promulgate safety standards for commercial motor vehicles and equipment subsequent to initial manufacture when the standards are based upon and similar to a Federal Motor Vehicle Safety Standard promulgated, either simultaneously or previously, under chapter 301 of title 49, U.S.C.

(o) Carry out the functions and exercise the authority vested in the Secretary under 23 U.S.C. 406 (e)(3), as added by section 2005(a) of SAFETEA–LU, Public Law 109–59, to engage in activities with States and State legislators to consider proposals related to safety belt use laws. The National Highway Traffic Safety Administrator may further delegate this authority, including to other modal Administrators within the Department of Transportation.

(p) Carry out the functions and exercise the authority vested in the Secretary under the ''Safe, Accountable, Flexible, Efficient Transportation Equity Act: A Legacy for Users'' or ''SAFETEA–LU'' (Pub. L. 109–59; August 10, 2005), as it relates to:

(1) Section 1906, the grant program to prohibit racial profiling;

(2) Section 2001(d), transfers;

(3) Section 2003(c), on-scene motor vehicle collision causation;

(4) Section 2003(d), research on distracted, inattentive, and fatigued drivers;

(5) Section 2003(f), refusal of intoxication testing;

(6) Section 2003(g), impaired motorcycle driving;

(7) Section 2003(h), reducing impaired driving recidivism;

(8) Section 2009(f), annual evaluation, in regard to high visibility enforcement program;

(9) Section 2010, motorcyclist safety;

(10) Section 2011, child safety and child booster seat incentive grants;

(11) Section 2012, safety data;

(12) Section 2013, drug-impaired driving enforcement;

(13) Section 2014, first responder vehicle safety program;

(14) Section 2015, driver performance study;

(15) Section 2016, rural state emergency medical services optimization pilot program;

(16) Section 2017, older driver safety; law enforcement training;

(17) Section 5513(e), automobile accident injury research;

(18) Section 5513(m) as it relates to section 513(e);

(19) Section 10202, emergency medical services;

(20) Section 10302, side-impact crash protection rulemaking;

(21) Section 10303, tire research;

(22) Section 10305(b), publication of nontraffic incident data collection;

(23) Section 10306, study of safety belt use technologies;

(24) Section 10307(b), regulations, in regard to safety labeling requirements;

(25) Section 10308, power window switches; and

(26) Section 10309(a), testing, in regard to 15-passenger van safety.

(q) Carry out the functions and exercise the authority vested in the Secretary under the ''Energy Independence and Security Act of 2007'' (Public Law 110–140; December 19, 2007), as it relates to:

(1) Section 106, Continued Applicability of Existing Standards;

(2) Section 107, National Academy of Sciences Studies;

(3) Section 108, National Academy of Sciences Study of Medium-Duty and Heavy-Duty Truck Fuel Economy;

(4) Section 110, Periodic Review of Accuracy of Fuel Economy Labeling;

(5) Section 113, Exemption from Separate Calculation Requirement;

(6) Section 131(b)(2) and (c)(1), Plug-in Electric Drive Vehicle Program;

(7) Section 225(a), Study of Optimization of Flexible Fueled Vehicles to Use E–85 Fuel;

(8) Section 227(a), Study of Optimization of Biogas Used in Natural Gas Vehicles;

(9) Section 242(a), Renewable Fuel Dispenser Requirements; and

(10) Section 248(a), Biofuels Distribution and Advanced Biofuels Infrastructure.

[Amdt. 1–226, 53 FR 23122, June 20, 1988, as amended by Amdt. 1–239, 56 FR 6810, Feb. 20, 1991; 65 FR 41015, July 3, 2000; 71 FR 11541, Mar. 8, 2006; 71 FR 30832, May 31, 2006; 73 FR 20001, Apr. 14, 2008]

§ 1.51 Delegations to Federal Transit Administrator.

The Federal Transit Administrator is delegated authority to exercise the functions vested in the Secretary by:

(a) The Urban Mass Transportation Act of 1964, as amended (78 Stat. 302, 49 U.S.C. 1601 et seq.).

(b) Section 1 of Reorganization Plan No. 2 of 1968 (5 U.S.C. app. 1).

(c) Section 10 of the Urban Mass Transportation Assistance Act of 1970, Public Law 91–453, 84 Stat. 962, 968).

(d) Sections 3 and 9 through 15 of the National Capital Transportation Assistance Act of 1969, as amended (D.C. Code, § 1–2441 *et seq*).

(e) The following sections of title 23, United States Code:

(1) 103 as it involves the withdrawal of Interstate routes and the substitution of non-highway public mass

transit projects authorized by subsection (e)(4);

(2) 101(a) as it involves approval of boundaries of urban and urbanized areas, 104(f)(4), 105(d), 106(b) as it involves the Federal-aid urban system, and 134; and

(3) 101 (b), (c), (d), and (e); 105 (a) and (g); 106 (a), (c) and (d); 108; 109 (a), (g), and (h); 110; 112; 113; 114; 116 (a) and (c); 117; 121; 122; 124; 128; 140(a); 142; and 145 as they involve mass transportation projects authorized by sections 103(e)(4), 142(a)(2), or 142(c).

(f) Title II of the National Mass Transportation Assistance Act of 1974 (Pub. L. 93–503, November 26, 1974), except sections 204 and 205.

(g) Title 49 United States Code, chapter 53 as amended by the Safe, Accountable, Flexible, Efficient Transportation Equity Act: A Legacy for Users (SAFETEA–LU) (Pub. L. 109–59, August 10, 2005).

(h) 49 U.S.C. 303 as it involves public (mass) transportation projects.

(i) Sections 3040, 3041, 3044, 3045, 3046, 3048, 3049, and 3050 of the Safe, Accountable, Flexible, Efficient Transportation Equity Act: A Legacy for Users (Pub. L. 109–59, 119 Stat.1144); sections 6009 (b) and (c) and 6010 of the Safe, Accountable, Flexible, Efficient Transportation Equity Act: A Legacy for Users as they relate to public (mass) transit projects; and the following provisions as amended by SAFETEA–LU and as related to public (mass) transportation projects:

(1) 23 U.S.C. 139, 326, and 502(h); and

(2) 42 U.S.C. 7506(c).

[Amdt. 1–157, 45 FR 83408, Dec. 18, 1980, as amended by Amdt. 1–168, 47 FR 16632, Apr. 19, 1982; Amdt. 1–180, 48 FR 15476, Apr. 11, 1983; Amdt. 1–187, 48 FR 52678, Nov. 21, 1983; Amdt. 1–191, 49 FR 6908, Feb. 24, 1984; Amdt. 1–203, 50 FR 30275, July 25, 1985; 68 FR 34550, June 10, 2003; 71 FR 30832, May 31, 2006]

§ 1.52 Delegations to Saint Lawrence Seaway Development Corporation Administrator.

The Administrator of the Saint Lawrence Seaway Development Corporation is delegated authority to:

(a) Carry out the functions vested in the Secretary by sections 4, 5, 6, 7, 8, 12 and 13 of section 2 of the Port and Tanker Safety Act of 1978 (92 Stat. 1471) as they relate to the operation of the St. Lawrence Seaway.

(b) Carry out the functions vested in the Secretary by section 5 of the International Bridge Act of 1972 (Pub. L. 92–434) as it relates to the St. Lawrence River.

(c) Carry out the functions vested in the Secretary by section 3(d) of the Act to Prevent Pollution from Ships (33 U.S.C. 1902(d)) as it relates to ships owned or operated by the Corporation when engaged in noncommercial service.

(d)–(e) [Reserved]

[Amdt. 1–113, 40 FR 43901, Sept. 24, 1975, as amended by 45 FR 48630, July 21, 1980; Amdt. 1–167, 47 FR 11677, Mar. 18, 1982; 60 FR 38971, July 31, 1995; Amdt. 1–272, 60 FR 63450, Dec. 11, 1995; Amdt. 1–292, 63 FR 10782, Mar. 5, 1998]

§ 1.53 Delegations to the Administrator of the Pipeline and Hazardous Materials Safety Administration.

The Administrator of the Pipeline and Hazardous Materials Safety Administration is delegated authority for the following:

(a) Pipelines. (1) Exercise the authority and carry out the functions vested in the Secretary by the Federal pipeline safety laws (49 U.S.C. 60101 *et seq.*).

(2) Exercise the authority and carry out the functions vested in the Secretary under section 28 of the Mineral Leasing Act, as amended (30 U.S.C. 185).

(3) Exercise the authority and carry out the functions vested in the Secretary under section 21 of the Deepwater Port Act of 1974, as amended (33 U.S.C. 1520) relating to the establishment, enforcement and review of regulations concerning the safe construction, operation or maintenance of pipelines on Federal lands and the Outer Continental Shelf.

(4) Exercise the authority and carry out the functions vested in the Secretary under section 5 of the International Bridge Act of 1972 (33 U.S.C. 535) as it relates to pipelines not over navigable waterways.

(5) Exercise the authority and carry out the functions vested in the Secretary under the Outer Continental Shelf Lands Act, as amended (43 U.S.C.

1331 *et seq.*) with respect to the establishment, enforcement and review of regulations concerning pipeline safety.

(6) Exercise the authority and carry out the functions delegated to the Secretary under sections 4(a) and 5(c) of Executive Order 12316 (46 FR 42237, Aug. 20, 1981) (delegating sections 107(c)(1)(c) and 108(b), respectively, of the Comprehensive Environmental Response, Compensation, and Liability Act of 1981, as amended (42 U.S.C. 9601 *et seq.*)) as they relate to pipelines.

(7) Exercise the authority and carry out the functions vested in the Secretary by section 7005 of the Consolidated Omnibus Budget Reconciliation Act of 1985 (recodified at 49 U.S.C. 60301 by Pub. L. 103–272) as they relate to pipeline safety user fees.

(8) Exercise the authority and carry out the functions vested in the Secretary by 49 U.S.C. 6101 *et seq.* as they relate to pipeline damage prevention One Call programs.

(9) Exercise the authority and carry out the functions vested in the Secretary by the Pipeline Safety Improvement Act of 2002 (Pub. L. 107–355, 116 Stat. 2985).

(b) *Hazardous materials.* Except as delegated by §1.74(a):

(1) Carry out the functions vested in the Secretary by 49 U.S.C. 5121(a), (b), (c), (d) and (e), 5122, 5123, and 5124, with particular emphasis on the shipment of hazardous materials and the manufacture, fabrication, marking, maintenance, reconditioning, repair or test of multi-modal containers that are represented, marked, certified, or sold for use in the transportation of hazardous materials; and

(2) Carry out the functions vested in the Secretary by all other provisions of the Federal hazardous material transportation law (49 U.S.C. 5101 *et seq.*) except as delegated by §§1.47(j)(2) and 1.73(d)(2) of this chapter and by paragraph 2(99) of Department of Homeland Security Delegation No. 0170.

(c) Carry out the functions vested in the Secretary by section 4(e) of the International Safe Container Act (46 U.S.C. 1503(e)).

(d) Exercise the authority and carry out the functions delegated to the Secretary in the following sections of Executive Order 12777 (56 FR 54757, Oct. 22, 1991):

(1) Section 2(b)(2) relating to the establishment of procedures, methods, equipment and other requirements to prevent discharges from, and to contain oil and hazardous substances in, pipelines, motor carriers, and railroads; and

(2) Section 2(d)(2) relating to the issuance of regulations requiring the owners or operators of pipelines, motor carriers, and railroads, subject to the Federal Water Pollution Control Act (33 U.S.C. 1321 *et seq.*), to prepare and submit response plans. For pipelines subject to the Federal Water Pollution Control Act, this authority includes the approval of means to ensure the availability of private personnel and equipment to remove, to the maximum extent practicable, a worst case discharge, the review and approval of response plans, and the authorization of pipelines to operate without approved response plans.

[70 FR 8301, Feb. 18, 2005, as amended at 71 FR 30833, May 31, 2006; 71 FR 52753, Sept. 7, 2006]

§1.54 Delegations to all Secretarial Officers.

(a) This section sets forth general delegations to the Deputy Secretary, the Deputy Under Secretary, the General Counsel, the Inspector General and the Assistant Secretaries.

(b) Each officer named in paragraph (a) of this section is delegated authority to:

(1) Redelegate and authorize successive redelegations of authority granted by the Secretary within their respective organizations, except as limited by law or specific administrative reservation, including authority to publish those redelegations in appendix A of this part.

(2) Authorize and approve official travel (except foreign travel) and transportation for themselves, their subordinates, and others performing services for, or in cooperation with, the Office of the Secretary. This authority may be redelegated in accordance with regulations issued by the Assistant Secretary for Administration.

(3) Communicate directly with chairmen of Field Coordination Groups provided such communications are largely informational in character and do not conflict with program responsibilities of the operating administrations.

(4) Establish ad hoc committees for specific tasks within their assigned staff area.

(5) Establish, modify, extend, or terminate standing committees within their specific areas of responsibility when directed or authorized to do so by the Secretary.

(6) Designate members of interagency committees when such committees are specifically concerned with responsibilities of direct interest to their office.

(7) Exercise the following authorities with respect to executive level positions (GS–16, 17, or 18 or equivalent) within their respective areas of responsibility:

(i) Determine how executive level positions will be filled; i.e., by reassignment, promotion, appointment.

(ii) Establish selection criteria to be used in identifying eligible candidates.

(iii) Confer with the Administrators on selection criteria and candidates for an executive level position that is a counterpart of an activity or position in the Office of the Secretary.

(iv) Recommend final selection for executive level positions, subject to review by the Executive Committee of the Departmental Executive Personnel Board and approval by the Secretary and the Civil Service Commission.

(v) Serve as ad hoc member of the Departmental Executive Personnel Board at the call of the Chairman and serve on the Board's Executive Committee whenever matters involving their respective offices or a functional counterpart thereof in an operating administration are presented to the Executive Committee for its consideration.

(8) Enter into inter- and intra-departmental reimbursable agreements other than with the head of another department or agency (31 U.S.C. 686). This authority may be redelegated only to office directors or other comparable levels and to contracting officers.

(9) Administer and perform the functions described in their respective functional statements.

(10) Exercise the authority of the Secretary to make certifications, findings and determinations under the Regulatory Flexibility Act (Pub. L. 96–354) with regard to any rulemaking document for which issuance authority is delegated by other sections in this part. This authority may be redelegated to those officials to whom document issuance authority has been delegated.

(11) Exercise the authority of the Secretary to resolve informal allegations of discrimination arising in or relating to their respective organizations through Equal Employment Opportunity counseling or the Alternative Dispute Resolution process and to develop and implement affirmative action and diversity plans within their respective organizations.

(49 U.S.C. 1657(e)(1))

[Amdt. 1–113, 40 FR 43901, Sept. 24, 1975, as amended by Amdt. 1–114, 41 FR 1288, Jan. 7, 1976; Amdt. 1–157, 45 FR 83408, Dec. 18, 1980; Amdt. 1–159, 46 FR 22593, Apr. 20, 1981; Amdt. 265, 60 FR 2891, Jan. 12, 1995]

§ 1.55 Delegations to Deputy Secretary.

The Deputy Secretary may exercise the authority of the Secretary except where specifically limited by law, order, regulations, or instructions of the Secretary. In addition, the Deputy Secretary is delegated authority to:

(a) Exercise executive control over the Departmental Planning-Programming-Budgeting System.

(b) Serve as Chairman of the Departmental Executive Personnel Board and its Executive Committee.

(c) Originate direct correspondence to chairmen of Field Coordination Groups on overall Departmental matters.

(d) Approve the establishment, modification, extension, or termination of:

(1) Department-wide (intra-department) committees affecting more than one program.

(2) OST-sponsored interagency committees.

(3) All advisory committees (including industry advisory committees) except those sponsored by field activities of the operating administrations.

(e) Approve the designation of:

(1) Departmental representatives and the chairman for interagency committees sponsored by the Office of the Secretary.

(2) Departmental representatives on all advisory committees except those sponsored by a field component of one of the operating administrations or the Materials Transportation Bureau.

(3) Departmental members for international committees.

(f) Authorize and approve official travel and transportation for self, subordinates, and others performing services for or in cooperation with the Office of the Secretary; and authorize and approve official foreign travel of all Departmental personnel and others performing travel for the Department.

(g) Serve as the representative of the Secretary on the board of directors of the National Railroad Passenger Corporation and carry out the functions vested in the Secretary as a member of the board by section 303 of the Rail Passenger Service Act of 1970 (84 Stat. 1330).

(h) Serve as the representative of the Secretary as incorporator, member of the acting board of directors, member of the board of directors, and member of the executive committee of the board of directors, of the United States Railway Association and when so serving carry out the functions vested in the Secretary in each capacity by title II of the Regional Rail Reorganization Act of 1973 (Pub. L. 93–236), as amended.

(i) Serve as the representative of the Secretary as incorporator, member of the interim board of directors established by section 301(c) of the Regional Rail Reorganization Act of 1973 (Pub. L. 93–236), and member of the board of directors, of the Consolidated Rail Corporation and when so serving carry out the functions vested in the Secretary in each capacity by title III of the Regional Rail Reorganization Act of 1973 (Pub. L. 93–236).

[Amdt. 1–113, 40 FR 43901, Sept. 24, 1975, as amended by Amdt. 1–114, 41 FR 1288, Jan. 7, 1976; Amdt. 1–116, 41 FR 20680, May 20, 1976; Amdt. 1–126, 41 FR 56327, Dec. 28, 1976; Amdt. 1–157, 45 FR 83408, Dec. 18, 1980; Amdt. 1–165, 46 FR 55266, Nov. 9, 1981]

§ 1.56 Delegations to the Assistant Secretary for Transportation Policy.

The Assistant Secretary for Transportation Policy is delegated authority to:

(a) Establish policy and maintain oversight of implementation of the National Environmental Policy Act of 1969, as amended (42 U.S.C. 4321–4347) within the Department of Transportation.

(b) Oversee the implementation of section 4(f) of the Department of Transportation Act of 1969 (49 U.S.C. 303).

(c) Represent the Secretary of Transportation on various interagency boards, committees, and commissions to include the Architectural and Transportation Barriers Compliance Board and the Advisory Council on Historic Preservation.

(d) Except with respect to proceedings under section 4(e) of the Department of Transportation Act (49 U.S.C. 307) relating to safety fitness of an applicant, decide on requests to intervene or appear before administrative agencies to present the views of the Department subject to concurrence by the General Counsel.

(e) Carry out the functions vested in the Secretary by section 656 of the Department of Energy Organization Act (42 U.S.C. 7266) which pertains to planning and implementing energy conservation matters with the Department of Energy. Serves as the Department's principal conservation officer.

[Amdt. 1–261, 59 FR 10063, Mar. 3, 1994]

§ 1.56a Delegations to the Assistant Secretary for Aviation and International Affairs.

The Assistant Secretary for Aviation and International Affairs is delegated authority to:

(a) Represent the Secretary of Transportation on various interagency boards, committees, and commissions to include the Trade Policy Review Group and the Trade Policy Staff Committee.

(b) Except with respect to proceedings under section 4(e) of the Department of Transportation Act (49 U.S.C. 307) relating to safety fitness of

an applicant, decide on requests to intervene or appear before administrative agencies to present the views of the Department subject to concurrence by the General Counsel.

(c) Carry out the functions of the Secretary pertaining to aircraft with respect to Transportation Orders T–1 and T–2 (44 CFR chapter IV) under the Act of September 8, 1950, as amended (50 U.S.C. app. 2061 *et seq.*) and Executive Order No. 10480 (3 CFR, 1949–1953 comp., p. 962), as amended.

(d) Serve as Department of Transportation member of the Interagency Group on International Aviation, and pursuant to Executive Order No. 11382 (3 CFR, 1966–1970 comp., p. 691), as amended, serve as Chair of the Group.

(e) Serve as second alternate representing the Secretary of Transportation to the Trade Policy Committee as mandated by Reorganization Plan No. 3 of 1979 (5 U.S.C. app. at 1381 (1988)) and Executive Order No. 12188 (3 CFR, 1980 comp., p. 131), as amended.

(f)(1) As supplemented by 14 CFR part 385, as limited by paragraph (f)(2) of this section, and except as provided in §§1.53(g), 1.57(a), and 1.57(s) of this title, carry out the functions transferred to the Department from the Civil Aeronautics Board under the following statutes:

(i) 49 U.S.C. app. 1551(b); and

(ii) Section 4(a)(1) through (4), (6), and (8) through (10) of the Civil Aeronautics Board Sunset Act of 1984 (49 U.S.C. app. 1553(a)(1) through (4), (6), and (8) through (10)).

(2) Insofar as the delegation in this paragraph (f) authorizes review of decisions of the Designated Senior Career Official in the Office of the Assistant Secretary for Aviation and International Affairs under §1.56b of this title, the authority is limited to approving any such decision or remanding it for reconsideration by the Designated Senior Career Official, with a full written explanation of the basis for the remand.

(g) Carry out the functions vested in the Secretary by the following subsections of section 1115 of the Federal Aviation Act of 1958, as amended, which relates to the security of foreign airports:

(1) Subsection 1115(e)(1), in coordination with the General Counsel, and the Federal Aviation Administrator; and

(2) Subsection 1115(e)(3), in coordination with the General Counsel, the Federal Aviation Administrator, the Assistant Secretary for Governmental Affairs, and the Assistant Secretary for Administration.

(h) Carry out the following statutory provisions relating to consumer protection:

(1) Section 4(a)(5) of the Civil Aeronautics Board Sunset Act of 1984 (49 U.S.C. app. 1553(a)(5)) relating to enforcement of the Consumer Credit Protection Act;

(2) Sections 101(3) (relating to relieving certain carriers from provisions of the Federal Aviation Act), 204 (relating to taking such actions and issuing such regulations as may be necessary to carry out responsibilities under the Act), 404 (relating to enforcing the duty of carriers to provide safe and adequate service), 407(a) (relating to requiring the production of information), 407(e) (relating to entering carrier property, and inspecting records), 411 (relating to determining whether any carrier or ticket agent is engaged in unfair or deceptive practices or unfair methods of competition), and 416 (relating to establishing just and reasonable classifications of carriers and rules to be followed by each) of the Federal Aviation Act of 1958, as amended, (49 U.S.C. 1301(3), 1324, 1374, 1377 (a) and (e), 1381, and 1386) as appropriate to the consumer protection functions in this paragraph.

(i) Carry out the functions of the Secretary pertaining to a determination of whether a fee imposed upon one or more air carriers by the owner or operator of an airport is reasonable under section 113 of the Federal Aviation Administration Authorization Act of 1994 (August 23, 1994; Pub. L. 103–305; 108 Stat. 1577–1579).

(j) Carry out section 101(a)(2) of the Air Transportation Safety and System Stabilization Act (Public Law 107–42,

115 Stat. 230), as delegated to the Secretary of Transportation by the President pursuant to a Presidential Memorandum dated September 25, 2001.

[Amdt. 1–261, 59 FR 10063, Mar. 3, 1994, as amended by Amdt. 1–266, 60 FR 11046, Mar. 1, 1995; Amdt. 1–269, 60 FR 15877, Mar. 28, 1995; 66 FR 55599, Nov. 2, 2001]

§ 1.56b Delegations to the Designated Senior Career Official, Office of the Assistant Secretary for Aviation and International Affairs.

The Designated Senior Career Official in the Office of the Assistant Secretary for Aviation and International Affairs is delegated exclusive authority to make decisions in all hearing cases to select a carrier for limited-designation international route authority, and in any other case that the Secretary designates, under the authority transferred to the Department from the Civil Aeronautics Board described in §§ 1.56a(f) and 1.57(s) of this title; this includes the authority to adopt, reject or modify recommended decisions of administrative law judges.

[Amdt. 1–261, 59 FR 10064, Mar. 3, 1994, as amended by Amdt. 1–269, 60 FR 15877, Mar. 28, 1995]

§ 1.57 Delegations to General Counsel.

The General Counsel is delegated authority to:

(a) Conduct all rule-making proceedings, except the issuance of final rules, under specific laws relating generally to standard time zones and daylight saving (advanced standard) time.

(b) Determine the practicability of applying the standard time of any standard time zone to the movements of any common carrier engaged in interstate or foreign commerce and issue operating exceptions in any case in which the General Counsel determines that it is impractical to apply the standard time.

(c) Provide and coordinate the Department's counseling service to employees on questions of conflict of interest and other matters of legal import covered by Departmental regulations on employee responsibility and conduct. Assure that counseling and interpretations on these matters are available to designated Deputy Counselors of the Department. Serve as the Department's designee to the Civil Service Commission on these matters.

(d) Serve as the alternate representative of the Secretary on the Board of Directors of the National Railroad Passenger Corporation when so designated by the Secretary or Deputy Secretary and carry out the functions vested in the Secretary as a member of the board by section 303 of the Rail Passenger Service Act of 1970 (84 Stat. 1330).

(e) Grant permission, under specific circumstances, to deviate from a policy or procedure prescribed by part 9 of the regulations of the Office of the Secretary (part 9 of this subtitle) with respect to testimony of OST employees as witnesses in legal proceedings, the serving of legal process and pleadings in legal proceedings involving the Secretary or his Office, and the production of records of that Office pursuant to subpoena.

(f) Prepare proposed Executive orders and proclamations (including transmittal documents), effect appropriate Departmental coordination, and determine whether the transmittal to the Office of Management and Budget should be submitted over the Secretary's signature or the General Counsel's.

(g) Emboss and affix the official Departmental seal to appropriate documents and other materials, for all purposes for which authentication by seal is required.

(h) Except with respect to proceedings under section 4(e) of the Department of Transportation Act (80 Stat. 934) relating to safety fitness of an applicant, decide on requests to intervene or appear before courts or agencies to present the views of the Department, subject to the concurrence of other interested staff elements in the Office of the Secretary.

(i) Exercise the authority delegated to the Department by the Assistant Attorney General, Land and Natural Resources Division, in his order of October 2, 1970, to approve the sufficiency of the title to land being acquired by purchase or condemnation by the United States for the use of the Department. Redelegation and successive redelegations of this authority may only be made to attorneys within the Department.

(j) Issue regulations making editorial changes or corrections in the Regulations of the Office of the Secretary.

(k) Review and take final action on applications for reconsideration of initial decisions not to disclose unclassified records of the Office of the Secretary requested under 5 U.S.C. 552(a)(3).

(l) Consider, ascertain, adjust, determine, compromise, and settle for an amount not exceeding $25,000, any tort claim arising from the activities of any employee of the Office of the Secretary. Request the approval of the Attorney General for any such award, compromise, or settlement in excess of $25,000 (28 U.S.C. 2672).

(m) Conduct coordination with foreign governments under section 118 of the Deep Seabed Hard Mineral Resources Act (June 21, 1980).

(n) Grant or deny petitions for extension of time to file a document under part 202 of title 46.

(o) Deny petitions for rulemaking or petitions for exemptions in accordance with § 5.13(c) of this title, and notify petitioners of denials in accordance with § 5.13(d) of this title.

(p) Exercise the review authority delegated to the Secretary by the President in Executive Order 12597 of May 13, 1987.

(q) Assist and protect consumers in their dealings with the air transportation industry and assist state and local organizations in handling airline consumer complaints. Carry out 49 U.S.C. 40113 and 41771 as appropriate to those functions.

(r)–(s) [Reserved]

(t) Carry out the functions vested in the Secretary by 49 U.S.C. 40119(b), as implemented by 49 CFR part 15, relating to the determination that information is Sensitive Security Information.

(10 U.S.C. 1552; 49 U.S.C. 1655(b); 49 U.S.C. 322; 49 CFR 1.57(l))

[Amdt. 1–113, 40 FR 43901, Sept. 24, 1975]

EDITORIAL NOTE: For FEDERAL REGISTER citations affecting § 1.57, see the List of CFR Sections Affected which appears in the Finding Aids section of the printed volume and on GPO Access.

§ 1.57a Delegations to Deputy General Counsel.

The Deputy General Counsel is delegated authority to:

(a) Appear on behalf of the Department on the record in hearing cases, and to initiate and carry out enforcement actions on behalf of the Department, under the authority transferred to the Department from the Civil Aeronautics Board as described in §§ 1.56a(f) and 1.57(s). This includes the authority to compromise penalties under 49 U.S.C. 46301; to issue appropriate orders, including cease and desist orders, under 49 U.S.C. 46101; and to require the production of information, enter carrier property and inspect records and inquire into the management of the business of a carrier under 49 U.S.C. 41711, as appropriate to the enforcement responsibilities. In carrying out these functions, the Deputy General Counsel is not subject to the supervision of the General Counsel.

(b) Initiate and carry out enforcement actions relating to:

(1) Foreign airport security on behalf of the Department under 49 U.S.C. 44907; and

(2) The Consumer Credit Protection Act under section 4(a)(5) of the Civil Aeronautics Board Sunset Act of 1984 (October 4, 1984; Pub. L. 98–443). In carrying out these functions, the Deputy General Counsel is not subject to the supervision of the General Counsel.

[Amdt. 1–269, 60 FR 15877, Mar. 28, 1995]

§ 1.57b Delegations to the Assistant General Counsel for Operations.

Administer 5 U.S.C. 552 and 49 CFR part 7 in connection with the records of the Office of the Secretary (including the Office of the Inspector General) and issue procedures to ensure uniform Departmental implementation of statutes and regulations regarding public access to records.

[Amdt. 1–228, 54 FR 10010, Mar. 9, 1989, as amended by Amdt. 1–261, 59 FR 10064, Mar. 3, 1994]

§ 1.58 Delegations to Assistant Secretary for Budget and Programs.

The Assistant Secretary for Budget and Programs is delegated authority to:

(a) Exercise day-to-day operating management responsibility over the Office of Programs and Evaluation and the Office of Budget.

(b) Direct and manage the Departmental planning, evaluation, and budget activities.

(c) Request apportionment or reapportionment of funds by the Office of Management and Budget, provided that no request for apportionment or reapportionment which anticipates the need for a supplemental appropriation shall be submitted to the Office of Management and Budget without appropriate certification by the Secretary.

(d) Issue allotments or allocations of funds to components of the Department.

(e) Authorize and approve official travel and transportation for staff members of the Immediate Office of the Secretary including authority to sign and approve related travel orders and travel vouchers, but not including requests for overseas travel.

(f) Issue monetary authorizations for use of reception and representation funds.

(g) Act for the Secretary and Deputy Secretary with respect to certain budgetary and administrative matters relating to the Immediate Office of the Secretary.

(h) Provide Congressional Notification for Energy Savings Performance Contracts (ESPCs) with cancellation ceilings in excess of $750,000, pursuant to the National Energy Conservation Policy Act, as amended, 42 U.S.C. 8287 et seq.

(i) In accordance with the Federal Civil Penalties Inflation Adjustment Act of 1990 (Pub. L. 101–410, 104 Stat. 890), as amended by the Debt Collection Improvement Act of 1996 (Pub. L. 104–134, 110 Stat. 1321), review, on an annual basis, each of the Department's civil penalty provisions, determine whether adjustment is required, calculate the necessary adjustment, and coordinate with the relevant Operating Administration to ensure that the requisite regulation making the adjustment is issued.

[Amdt. 1–130, 42 FR 58754, Nov. 11, 1977. Redesignated by Amdt. 1–157, 45 FR 83409, Dec. 18, 1980, as amended by Amdt. 1–293, 63 FR 33589, June 19, 1998; 68 FR 12834, Mar. 18, 2003]

§ 1.59 Delegations to the Assistant Secretary for Administration.

The Assistant Secretary for Administration is delegated authority for the following:

(a) *Acquisition.* (1) Exercise procurement authority with respect to requirements of the Office of the Secretary.

(2) Make the required determinations with respect to mistakes in bids relative to sales of personal property conducted by the Office of the Secretary without power of redelegation.

(3) Carry out the functions vested in the Secretary by sections 3 and 4(b) (as appropriate) of Executive Order 11912.

(4) Carry out the functions delegated to the Secretary from time to time by the Administrator of General Services to lease real property for Department use.

(5) Carry out the duties and responsibilities of agency head for departmental procurement within the meaning of the Federal Acquisition Regulation. This authority as agency head for departmental procurement excludes duties, responsibilities, and powers expressly reserved for the Secretary of Transportation.

(6) Serve as Deputy Chief Acquisition Officer.

(b) *Personnel.* (1) Conduct a personnel management program for the Office of the Secretary with authority to take, direct others to take, recommend or approve any personnel action with respect to such authority.

(2) Serve as Vice Chairman of the Departmental Executive Resources Board and its Executive Resources Review Committee.

(3) Exercise emergency authority to hire without the prior approval of the Deputy Secretary normally required by Departmental procedures implementing general employment limitations when in the judgment of the Assistant Secretary immediate action is necessary to effect the hire and avoid

the loss of a well-qualified job applicant, and for similar reasons.

(4) Review proposals of the Office of the Secretary for each new appointment or transfer to:

(i) Verify the essentiality of the position, and

(ii) [Reserved]

(5) Approve employment of experts and consultants in accordance with 5 U.S.C. 3109.

(6) Serve as Vice Chairman of the Departmental Executive Personnel Board and its Executive Committee.

(7) Issue final interpretations for the Department and its administrations on matters arising under section 7117 of title VII of the Civil Service Reform Act of 1978.

(8) Develop, coordinate, and issue wage schedules for Department employees under the Federal Wage System, except as delegated to the Commandant of the Coast Guard at §1.46.

(c) *Finance.* (1) Administer the financial and fiscal affairs of the Office of the Secretary (other than those for which the Assistant Secretary for Budget and Programs is responsible), in accordance with 31 U.S.C. 3512.

(2) Designate to the Treasury Department certifying officers and designated agents for the Office of the Secretary and imprest fund cashiers for the Departmental headquarters. (Redelegation to the Director of Financial Management is contained in subpart C, §1.59a.)

(3) In accordance with 31 U.S.C. 3527, grant or recommend relief from accountability for losses or deficiencies of disbursing officers, cashiers, or other accountable officers as follows:

(i) Grant relief for losses or deficiencies of less than $500 for which charges or exceptions have not been raised by the General Accounting Office.

(ii) Recommend relief by the Comptroller General for all other losses or deficiencies.

(4) Settle and pay claims by employees of the Office of the Secretary, except at the Transportation System Center, for personal property losses, as provided by 31 U.S.C. 241(b).

(5) Waive claims and make refunds in connection with claims of the United States for erroneous payment of pay and allowances or of travel, transportation, and relocation expenses and allowances to an employee of the Office of the Secretary in amounts aggregating not more than $1,500 without regard to any repayments, and deny requests for waiver of such claims regardless of the aggregate amount of the claim, as provided by 4 CFR parts 91, 92, and 93. This authority may be redelgated only to the Director of Financial Management.

(6) Compromise, suspend collection action on, or terminate claims of the United States not exceeding $100,000 (excluding interest) which are referred to, or arise out of the activities of, the Office of the Secretary.

(7) Determine the existence and amount of indebtedness and the method of collecting repayments from employees of the Office of the Secretary and collect repayments accordingly, as provided by 5 U.S.C. 5514. This authority may be redelegated only to the Director of Financial Management.

(8) Develop, coordinate, and issue wage schedules for Department employees under the Federal Wage System.

(9) Review and approve for payment any voucher for $25 or less the authority for payment of which is questioned by a certifying or disbursing officer. (Redelegation to the Director of Financial Management is contained in subpart C, §1.59a.)

(10) Approve cash purchases of emergency passenger transportation services costing over $100 under FPMR G–72, as amended.

(11) Perform accounting and related functions in support of the essential air service program.

(12) Carry out the functions and obligations assigned to the Secretary with respect to the Prompt Payment Act, Public Law 97–177.

(13) Carry out the functions and duties assigned to the Secretary with respect to the Debt Collection Act of 1982, Public Law 97–365.

(d) *Special funds.* Except as otherwise delegated, establish or operate, or both, such special funds as may be required by statute or by administrative determination. This excludes the Working Capital Fund (49 U.S.C. 327).

(e) *Security.* (1) Represent the Secretary on the National Communications Security Committee and Interdepartmental Committee on Internal Security.

(2) Issue identification media ''by direction of the Secretary''.

(3) Classify information in the interests of national defense.

(4) Take certain classified actions on behalf of the Department in connection with counter-audio programs.

(5) Authorize exceptions to investigative standards for National Defense Executive Reservists.

(6) Determine when emergencies, other than attack on the United States, justify activation of Personnel Security Regulations issued by the Secretary.

(7) Approve exceptions to the Personnel Security regulations issued by the Secretary.

(8) Request the Office of Personnel Management to modify investigative requirements in other areas.

(9) Ensure Department-wide compliance with Executive Orders 10450, 12829, 12958, 12968, and related regulations and issuances.

(f) *Printing.* (1) Request approval of the Joint Committee on Printing, Congress of the United States, for any procurement or other action requiring Committee approval.

(2) Certify the necessity for Departmental periodicals and request approval of the Director of the Office of Management and Budget (OMB Circular No. A–3 Revised as of Sept. 8, 1960).

(g) *Document authentication.* Emboss and affix the official Departmental seal to appropriate documents and other materials, for all purposes for which authentication by seal is required.

(h) *Foreign travel.* Review written requests for modification to the Department's foreign travel plan approved by the Office of Management and Budget.

(i) *Gifts and bequests.* Carry out the functions vested in the Secretary by section 9(m) of the Department of Transportation Act (Pub. L. 89–670).

(j) *Building management.* Carry out the functions vested in the Secretary by sections 1(b) and 4(b) (as appropriate) of Executive Order 11912.

(k) *Privacy.* Issue notices of Department of Transportation systems of records as required by the Privacy Act of 1974 (5 U.S.C. 552a(e)(4), (11)).

(l) *Hearings.* Provide logistical and administrative support to the Department's Office of Hearings.

(m) *Paperwork reduction.* Carry out the functions and responsibilities assigned to the Secretary with respect to the Paperwork Reduction Act of 1980, Public Law 96–511.

(n) *Federal real property management.* Carry out the functions assigned to the Secretary with respect to Executive Order 12512 of April 28, 1985.

(o) *The Uniform Relocation Assistance and Real Property Acquisition Policies Act of 1970, Public Law 91–646, 84 Stat. 1894.* Except as provided in §§1.45, 1.48 and 49 CFR 25.302, the functions, powers, and duties of the Secretary of Transportation, with respect to the Uniform Relocation Assistance and Real Property Acquisition Policies Act of 1970, are delegated to the Assistant Secretary for Administration with respect to programs administered by the Office of the Secretary. This authority is subject to the requirements listed in §1.45 that govern all Operating Administrations' authority with respect to the Uniform Relocation Assistance and Real Property Acquisition Policies Act of 1970.

(p) *Regulations.* Issue Department of Transportation procurement regulations, subject to the following limitation:

(1) *Coordination.* The views of the General Counsel, the interested administrations and other offices will be solicited in the development of the procurement regulations. In commenting upon proposed provisions for the procurement regulations, the administrations will indicate the nature and purpose of any additional implementing or supplementing policy guidances which they propose to issue at the administration level.

(2) [Reserved]

[Amdt. 1–113, 40 FR 43901, Sept. 24, 1975]

EDITORIAL NOTE: For FEDERAL REGISTER citations affecting §1.59, see the List of CFR Sections Affected which appears in the Finding Aids section of the printed volume and on GPO Access.

§ 1.59a Redelegations by the Assistant Secretary for Administration.

(a) The Assistant Secretary for Administration has re-delegated to the Director, Office of the Senior Procurement Executive the authority to:

(1) carry out the duties and responsibilities of agency head for departmental procurement within the meaning of the Federal Acquisition Regulation except for those duties expressly reserved for the Secretary of Transportation.

(2) carry out the functions of the Chief Acquisition Officer except for those functions specifically reserved for the Deputy Secretary.

(3) procure and authorize payment for property and services for the Office of the Secretary, with power to re-delegate and authorize successive re-delegations.

(b) The Assistant Secretary for Administration has redelegated to the Director of Personnel authority to:

(1) Conduct a personnel management program for the Office of the Secretary with authority to take, direct others to take, recommend or approve any personnel action with respect to such authority.

(2) Develop, coordinate, and issue wage schedules for Department employees under the Federal Wage System, except as delegated to the Commandant of the Coast Guard at §1.46 of this part.

(c) The Assistant Secretary for Administration has redelegated to the Director of Financial Management authority to:

(1) Designate to the Treasury Department certifying officers and designated agents for the Office of the Secretary and imprest fund cashiers for the Departmental Headquarters.

(2) Certify to the validity of obligations as required by 31 U.S.C. 200 and to the adequacy of bond coverage for the designations under section 160(c)(2).

(3) Sign reports on Budget Execution as required by OMB Circular A–34 (Revised).

(4) Review and approve for payment any voucher for $25 or less the authority for payment of which is questioned by a certifying or disbursing officer.

(5) Process essential air service payments.

(6) Approve claims of OST employees allowable under 31 U.S.C. 3721 for amounts of $500 or less.

[Amdt. 1–209, 51 FR 29233, Aug. 15, 1986, as amended by Amdt. 1–232, 54 FR 46616, Nov. 6, 1989; 69 FR 60563, Oct. 12, 2004]

§ 1.60 Delegations to the Inspector General.

The Inspector General is delegated, and has agreed to carry out, the following:

(a) *Aviation economics.* The conduct of audits under 49 U.S.C. 1389; and 49 U.S.C. 1377(e).

(b) [Reserved]

[Amdt. 1–199, 49 FR 50997, Dec. 31, 1984, as amended at 69 FR 60563, Oct. 12, 2004]

§ 1.61 Delegations to Assistant Secretary for Governmental Affairs.

The Assistant Secretary for Governmental Affairs is delegated authority to:

(a) Establish procedures for responding to Congressional correspondence.

(b) Serve as the Department's point of contact in relationships with public and private organizations and groups devoted to consumer and community services or affairs.

(c) Serve as coordinator for intra-Departmental consumer affairs programs.

[Amdt. 1–157, 45 FR 83409, Dec. 18, 1980, as amended by Amdt. 1–199, 49 FR 50997, Dec. 31, 1984; Amdt. 1–205, 50 FR 52468, Dec. 24, 1985; Amdt. 1–269, 60 FR 15877, Mar. 28, 1995]

§ 1.62 Delegations to the Director of Small and Disadvantaged Business Utilization.

The Director of Small and Disadvantaged Business Utilization is delegated authority to:

(a) Exercise Departmental responsibility for the implementation and execution of functions and duties under sections 8 and 15 of the Small Business Investment Act, as amended (15 U.S.C. 637 and 644).

(b) Carry out the functions vested in the Secretary by section 906 of the Railroad Revitalization and Regulatory Reform Act of 1976 (Pub. L. 94–210), as amended.

[Amdt. 1–157, 45 FR 83409, Dec. 18, 1980]

§ 1.63 Delegations to Assistant to the Secretary and Director of Public Affairs.

The Assistant to the Secretary and Director of Public Affairs is delegated authority to:

(a) [Reserved]

(b) Monitor the overall public information program and review and approve Departmental informational materials having policy-making ramifications before they are printed and disseminated.

(c) Carry out the functions vested in the Secretary by section 4(b) (as appropriate) of Executive Order 11912.

(d) Carry out the functions to promote carpooling and vanpooling which were vested in the Federal Energy Administration by section 381(b)(1)(B) of the Energy Policy and Conservation Act and transferred to the Department of Transportation by section 310 of the Department of Energy Organization Act of 1977.

[Amdt. 1–113, 40 FR 43901, Sept. 24, 1975, as amended by Amdt. 1–118, 41 FR 35849, Aug. 25, 1976; Amdt. 1–157, 45 FR 83409, Dec. 18, 1980; Amdt. 1–184, 48 FR 44079, Sept. 27, 1983; Amdt. 1–228, 54 FR 10010, Mar. 9, 1989; Amdt. 1–261, 59 FR 10064, Mar. 3, 1994]

§ 1.64 Delegations to the Director, Transportation Administrative Service Center.

The Director, Transportation Administrative Service Center (TASC), is delegated authority to operate the Working Capital Fund (49 U.S.C. 327).

[Amdt. 1–285, 62 FR 16499, Apr. 7, 1997]

§ 1.65 Authority to classify information.

(a) E.O. 12356 confers upon the Secretary of Transportation authority to originally classify information as Secret and Confidential with further authorization to delegate this authority. (No official of the Department of Transportation has authority to originally classify information as Top Secret.)

(b) The following delegations of this authority, which may not be redelegated, are hereby made:

(1) *Office of the Secretary (OST).* Chief, Security Staff.

(2) *Federal Aviation Administration (FAA).* The Administrator; Director of Civil Aviation Security.

(3) *Maritime Administration (MARAD).* The Administrator; Associate Administrator for Policy and Administration (Confidential only); Director, Office of International Activities (Confidential only); Chief, Division of National Security Plans (Confidential only).

(c) Authority to originally classify information as Secret or Confidential is delegated to the following officials to become effective automatically upon declaration of civil readiness level Initial Alert or the comparable military readiness level. If invoked, this authority is automatically terminated when both civil and military levels return to the level of Communications Watch or comparable readiness state.

(1) *OST.* Deputy Secretary; Assistant Secretary for Transportation Policy; Assistant Secretary for Aviation and International Affairs; Assistant Secretary for Administration.

(2) *FAA.* Deputy Administrator; Directors, FAA Regions and Centers.

(3) *MARAD.* Deputy Administrator; Region Directors; Heads of ALFA, BRAVO, and CHARLIE Emergency Teams when activated.

(d) Although the delegations of authority are expressed above in terms of positions, the authority is personal and is vested only in the individual occupying the position. The authority may not be exercised ''by direction of'' a designated official. The formal appointment or assignment of an individual to one of the identified positions, a designation in writing of an individual to act in the absence of one of these officials, or the exercise by an individual of the powers of one of these officials by operation of law, however, conveys the authority to originally classify information.

(e) Previous delegations of authority to Department of Transportation officials to originally classify information as Secret and Confidential are hereby rescinded.

[Amdt. 1–195, 49 FR 26594, June 28, 1984, as amended by Amdt. 1–261, 59 FR 10061, 10064, Mar. 3, 1994; 68 FR 34550, June 10, 2003]

§ 1.66 Delegations to Maritime Administrator.

With the exception of those authorities delegated to the Maritime Subsidy Board in §1.67 of this title, the Maritime Administrator is delegated authority to:

(a) Carry out sections 9, 12, 14a, 21a, 37, 38, 40, 41, and 42 of the Shipping Act, 1916, as amended (46 App. U.S.C. 801 *et seq.*);

(b) Carry out the Merchant Marine Act, 1920, as amended (46 App. U.S.C. 861 *et seq.*), including the Ship Mortgage Act, 1920, as amended (46 App. U.S.C. 921 *et seq.*);

(c) Carry out the Merchant Marine Act, 1928, as amended (46 App. U.S.C. 891 *et seq.*);

(d) Carry out section 7 of the Intercoastal Shipping Act, 1933, as amended (46 App. U.S.C. 843 *et seq.*);

(e) Carry out the Merchant Marine Act, 1936, as amended (46 App. U.S.C. 1101 *et seq.*); except the authority delegated to the Administrator of the National Oceanic and Atmospheric Administration relating to the establishment of capital construction fund agreements under section 607 thereof and the granting of financing guarantees under title XI thereof, with respect to vessels in the fishing trade or industry;

(f) Carry out the Merchant Ship Sales Act of 1946, as amended (50 U.S.C. App. 1735 *et seq.*);

(g) Carry out the Suits in Admiralty Act (1920), as amended (46 App. U.S.C. 741 *et seq.*);

(h) Carry out the Civilian Nautical School Act, 1940 (46 App. U.S.C. 1331 *et seq.*);

(i) Carry out the Act of June 2, 1951 (46 App. U.S.C. 1241a) regarding the ''Vessel Operations Revolving Fund'';

(j) Carry out the Act of August 9, 1954 (50 U.S.C. 196 *et seq.*) commonly called the Emergency Foreign Vessels Acquisition Act;

(k) Carry out the Merchant Marine Decorations and Medals Act of 1988 (46 App. U.S.C. 2001 *et seq.*);

(l) Carry out the Maritime Academy Act of 1958, as amended (46 App. U.S.C. 1381 *et seq.*);

(m) Carry out the Act of May 16, 1972, as amended (86 Stat. 140) authorizing sale or purchase of certain passenger vessels;

(n) Carry out the Act of August 22, 1972 (86 Stat. 618) authorizing sale of Liberty ships for use as artificial reefs;

(o) Carry out section 717 of the Act of October 26, 1972 (86 Stat. 1184) commonly known as the Department of Defense Appropriations Act, 1973, and similar subsequent enactments, with respect to transferring or otherwise making available vessels under the jurisdiction of the Maritime Administration to another Federal agency or, similarly, accepting vessels from another Federal agency;

(p) Carry out the provisions of sections 10 through 13 of Public Law 103–451, the National Maritime Heritage Act of 1994, 108 Stat. 4769, 4778–4782;

(q) Exercise the authority vested in the Administrator of General Services by the Act of June 1, 1948, Public Law 80–566, 62 Stat. 281, 40 U.S.C. 318–318c and the Federal Property and Administrative Services Act of 1949, as amended, 63 Stat. 377, and delegated to the Secretary of Transportation by the Administrator of General Services on March 23, 2000, relating to the enforcement of laws for the protection of property and persons at the United States Merchant Marine Academy, located in Kings Point, New York. This may be accomplished through appointment of uniformed personnel as special police, establishment of rules and regulations governing conduct on the affected property, and execution of agreements with other Federal, State, or local authorities.

(r) Carry out the responsibilities of the National Shipping Authority (initially established by the Secretary of Commerce effective March 13, 1951) in the capacity of Director, National Shipping Authority;

(s) Carry out the Maritime Education and Training Act of 1980 (46 App. U.S.C. 1295), as amended;

(t) Carry out all other activities previously vested in the Secretary of Commerce and transferred pursuant to Public Law 97–31;

(u) Carry out the functions vested in the Secretary by section 3(d) of the Act to Prevent Pollution from Ships (33 U.S.C. 1902(d)) as it relates to ships

owned or operated by the Maritime Administration when engaged in noncommercial service;

(v) Carry out the responsibilities and exercise the authorities of the Secretary of Transportation under the Maritime Security Act of 1996, Public Law 104–239;

(w) Carry out the provisions of subtitle B of Public Law 101–624;

(x) Carry out the responsibilities and exercise the authorities of the Secretary of Transportation under sections 1008, 1009, and 1013 of Public Law 104–324;

(y) Carry out the functions vested in the Secretary by the Oil Pollution Act of 1990 (August 18, 1990; Pub. L. 101–380; 104 Stat. 484) in sections 4115(f) relating to vessel financing and 4117 relating to a feasibility study of an oil pollution prevention program. (See 49 CFR 1.46 and 1.53).

(z) Carry out the functions vested in the Secretary by Section 2927, Title XXIX of the National Defense Authorization Act of 1994 (Public Law 103–160; November 30, 1993) relating to authority to convey surplus real property to public entities for use in the development or operation of port facilities.

(aa) Carry out the following powers and duties vested in the Secretary by the Deepwater Port Act of 1974, as amended (33 U.S.C. 1501–1524):

(1) The authority to issue, transfer, amend, or reinstate a license for the construction and operation of a deepwater port (33 U.S.C. 1503(b)).

(2) The authority to process applications for the issuance, transfer, amendment, or reinstatement of a license for the construction and operation of a deepwater port (33 U.S.C. 1503(b)), as amended, in coordination with the Commandant of the Coast Guard.

(3) Approval of fees charged by adjacent coastal States for use of a deepwater port and directly related landbased facilities (33 U.S.C. 1504(h)(2)).

(4) In collaboration with the Assistant Secretary for Aviation and International Affairs and the Assistant Secretary for Transportation Policy, consultation with the Secretary of State relating to international actions and cooperation in the economic, trade and general transportation policy aspects of the ownership and operation of deepwater ports (33 U.S.C. 1510).

(5) Submission of notice of the commencement of a civil suit (33 U.S.C. 1515(b)(2)).

(6) Intervention in any civil action to which the Secretary is not a party (33 U.S.C. 15150).

(7) Authority to request the Attorney General to seek the suspension or termination of a deepwater port license and to initiate a proceeding before the Surface Transportation Board (33 U.S.C. 1507, 1511(a)).

(bb) Carry out the functions and exercise the authorities vested in the Secretary by sections 202(b), 203(b), 203(g), and 213(g) of division c, title II, Public Law 105–277, which relate to ownership and control requirements for vessel fishery endorsements for vessels measuring 100 feet and greater.

(cc) Exercise the authority vested in the Secretary of Transportation by section 408(a) of Public Law 105–383 approved November 13, 1998, (112 Stat. 3411 and 3430), 46 U.S.C. 2302(e), relating to the enforcement of the prohibition of shipment of Government-impelled cargoes on vessels if (1) the vessel has been detained and determined to be substandard by the Secretary of Transportation for violation of an international safety convention to which the United States is a party; or (2) the operator of the vessel has on more than one occasion had a violation of an international safety convention to which the United States is a party. The term ''Government-impelled cargo'' means cargo for which a Federal agency contracts directly for shipping by water or for which (or the freight of which) a Federal agency provides financing, including financing by grant, loan, or loan guarantee, resulting in shipment of the cargo by water.

(dd) Carry out the functions and exercise the authority vested in the Secretary by section 109 of the Maritime Transportation Security Act of 2002, Public Law 107–295, 116 Stat. 2064, provide training for maritime security professionals. This authority may be redelegated.

(ee) Carry out the functions and exercise the authorities vested in the Secretary by section 3517 of Title XXXV of Public Law 108–136 which relates to the

Maintenance and Repair Reimbursement Pilot Program.

(ff) Carry out the functions and exercise the authorities vested in the Secretary by Subtitle V of title 46 United States Code, which establishes the Maritime Security Fleet.

(gg) Carry out the functions and exercise the authorities vested in the Secretary by Subtitle D of Title XXXV of Public Law 108–136, which relates to the National Defense Tank Vessel Construction Assistance Program.

(hh) Carry out the functions and exercise the authorities vested in the President by section 1019 of Pub. L. 109–364 and delegated to the Secretary by the President.

[Amdt. 1–164, 46 FR 47459, Sept. 28, 1981]

EDITORIAL NOTE: For FEDERAL REGISTER citations affecting §1.66, see the List of CFR Sections Affected which appears in the Finding Aids section of the printed volume and on GPO Access.

§ 1.67 Delegations to Maritime Subsidy Board.

(a) The Maritime Subsidy Board is delegated authority to:

(1) Carry out all functions previously vested in the Secretary of Commerce pursuant to section 105(1) (except the last proviso thereto and readjustments in determinations of operating cost differentials not requiring a hearing and contractual changes reducing or realigning service requirements not involving additional subsidy or requiring a section 605(c) hearing under the Act (46 App. U.S.C. 1175(c)), section 105(2), and, insofar as applicable to these functions, section 105(3) of Reorganization Plan No. 21 of 1950, and section 202(b)(1) of Reorganization Plan No. 7 of 1961, except investigations, hearings and determinations, including changes in determinations, with respect to minimum manning scales, minimum wage scales, and minimum working conditions referred to in section 301(a) of the Merchant Marine Act, 1936, as amended (46 App. U.S.C. 1101 *et seq.*).

(2) Carry out all functions previously vested in the Secretary of Commerce pursuant to section 103(e) of Reorganization Plan No. 7 of 1961 and section 202(b)(2) (except requiring the filing of reports, accounts, records, rates, charges, and memoranda under section 21 of the Shipping Act, 1916, as amended, and making reports and recommendations to Congress) and section 202(b)(3) of Reorganization Plan No. 7 of 1961, insofar as said functions relate to the functions described in paragraph (a)(1) of this section.

(3) Execute and sign, by and through any member of the Board or the Secretary or an Assistant Secretary of the Board, contracts and other documents authorized or approved by the Board pursuant to paragraphs (a)(1) and (a)(2) of this section. The execution of such contracts or documents may be attested, under the seal of the Department of Transportation, by the Secretary or an Assistant Secretary of the Maritime Subsidy Board.

(b) The Maritime Subsidy Board may exercise other authorities of the Secretary of Transportation as applicable to performing the functions assigned to the Board in this part.

(c) The Board is composed of the Maritime Administrator, the Deputy Maritime Administrator, and the Chief Counsel of the Administration, and during a vacancy in any one of those offices, the person acting in such capacity shall be a member of the Board, unless the Secretary of Transportation designates another person. In case there still is a vacancy in the Board or in the absence or disability of one of its members, the Secretary of the Maritime Administration and Maritime Subsidy Board, or any other persons designated by the Secretary of Transportation, shall act as a member or members of the Board. Each member of the Board, while serving in that capacity, shall act pursuant to direct authority from the Secretary of Transportation and exercise judgment independent of authority otherwise delegated to the Maritime Administrator. The Maritime Administrator or the Acting Maritime Administrator serves as Chairperson of the Board. The concurring votes of two members shall be sufficient for the disposition of any matter which may come before the Board.

(d) The Chairperson of the Maritime Subsidy Board may make use of officers and employees of the Maritime Administration to perform activities

for the Board. Employees of the Maritime Administration may be designated as the Secretary or Assistant Secretaries of the Board.

[Amdt. 1–164, 46 FR 47460, Sept. 28, 1981, as amended by Amdt. 1–211, 51 FR 29471, Aug. 18, 1986; Amdt. 1–247, 56 FR 59893, Nov. 26, 1991]

§ 1.68 Delegations to the Under Secretary of Transportation for Security for the Transportation Security Administration.

(a) Carry out the functions vested in the Secretary by 49 U.S.C. 5103a relating to security risk determinations for the issuance of licenses to operate motor vehicles transporting hazardous materials in commerce.

(b) [Reserved]

[68 FR 10989, Mar. 7, 2003]

§ 1.69 Delegations to the Director of Intelligence, Security, and Emergency Response.

The Director of Intelligence, Security, and Emergency Response is delegated authority for the following:

(a) *Intelligence and Security*. Carry out the functions assigned to the Secretary by the Aviation Security Improvement Act of 1990, section 101 (Pub. L. 101–508; November 16, 1990) relating to intelligence and security matters in all modes of transportation.

(b) *Emergency preparedness and response*. Carry out the functions related to emergency preparedness vested in the Secretary by 49 U.S.C. 101 and 301 or delegated to the Secretary by or through the Defense Production Act of 1950, 50 U.S.C. App. 2061 *et seq.*; Executive Order 10480, as amended; Executive Order 12148; Executive Order 12656; Executive Order 12742; Executive Order 12919, as amended; Reorganization Plan No. 3 or 1978; and such other statutes, executive orders, and other directives as may pertain to emergency preparedness.

[70 FR 7670, Feb. 15, 2005]

§ 1.70 Delegations to the Director of the Departmental Office of Civil Rights.

The Director of the Departmental Office of Civil Rights is delegated authority to conduct all stages of the formal internal discrimination complaint process (including the acceptance or rejection of complaints); to provide policy guidance to the operating administrations and Secretarial officers concerning the implementation and enforcement of all civil rights laws, regulations and executive orders for which the Department is responsible; to otherwise perform activities to ensure compliance with external civil rights programs; and to review and evaluate the operating administrations' enforcement of these authorities.

These authorities include:

(a) Title VII of the Civil Rights Act of 1964, *as amended*, 42 U.S.C. 2000e *et seq*.

(b) Title VI of the Civil Rights Act of 1964, *as amended*, 42 U.S.C. 2000d *et seq*.

(c) Section 504 of the Rehabilitation Act of 1973, *as amended*, 29 U.S.C. 794 and 794a.

(d) Section 501 of the Rehabilitation Act of 1973, *as amended*, 29 U.S.C. 791.

(e) Age Discrimination in Employment Act of 1967, *as amended*, 29 U.S.C. 621 *et seq*.

(f) Age Discrimination Act of 1975, *as amended*, 42 U.S.C. 6101.

(g) Americans with Disabilities Act of 1990, Pub. L. No. 101–336, 104 Stat. 327 (1990) (codified at 42 U.S.C. 12101–121213).

(h) Equal Pay Act of 1963 (enacted as section 6(d) of the Fair Labor Standards Act of 1938, 29 U.S.C. 206(d)).

(i) Alcohol, Drug Abuse, and Mental Health Administration Reorganization Act, 42 U.S.C. 290dd(b).

(j) 29 CFR Parts 1600 through 1691 (Equal Employment Opportunity Commission Regulations).

(k) Title VIII of the Civil Rights Act of 1968, *as amended*, 42 U.S.C. 3601 *et seq*. (fair housing provisions).

(l) The Federal Property and Administrative Services Act of 1949, 40 U.S.C. 476.

(m) Title IX of the Education Amendments Act of 1972, 20 U.S.C. 1681.

(n) Executive Order No. 12898, Federal Actions To Address Environmental Justice in Minority Populations and Low-Income Populations. (In coordination with the Assistant Secretary for Transportation Policy.)

(o) 49 U.S.C. 47113, 47107, and 47123 (formerly sections 505(f), 511(a)(17), and 520 of the Airport and Airway Improvement Act of 1982, *as amended*).

(p) 49 U.S.C. 41705 (formerly the Air Carrier Access Act of 1986, *as amended*).

(q) The Federal-Aid Highway Act, *as amended*, 23 U.S.C. 140 and 324.

(r) 49 U.S.C. 306.

(s) 49 U.S.C. 5310, 5332 (formerly sections 16 and 19 of the Federal Transit Act, *as amended*).

(t) The Intermodal Surface Transportation Efficiency Act of 1991, Pub. L. 102–240, 105 Stat. 1919, section 1003.

(u) The Highway Safety Act of 1966, *as amended*, 23 U.S.C. 402(b)(1)(D).

[Amdt. 265, 60 FR 2891, Jan. 12, 1995, as amended at 68 FR 34550, June 10, 2003]

§ 1.71 [Reserved]

§ 1.72 Delegations to the Office of the Chief Information Officer.

(a) Carry out all functions and responsibilities assigned to the Secretary with respect to the Paperwork Reduction Act of 1995 (44 U.S.C. 3506);

(b) Carry out all functions and responsibilities assigned to the Secretary with respect to the Clinger-Cohen Act of 1996 (40 U.S.C. 1422 to 1424, 1427);

(c) Carry out all functions and responsibilities assigned to the Secretary with respect to the Computer Security Act of 1987 (40 U.S.C. 759, 759 notes);

(d) Approve waivers to Federal Information Processing Standards (FIPS) under Section 5131 of the Clinger-Cohen Act of 1996 (40 U.S.C. 1441); and

(e) Carry out all the functions and responsibilities assigned to the Secretary with respect to Executive Order 13011, Federal Information Technology, Section 2, paragraphs (a), (b), (d), (e), and (f).

[Amdt. 1–290, 62 FR 51804, Oct. 3, 1997]

§ 1.73 Delegation to the Administrator of the Federal Motor Carrier Safety Administration.

The Administrator of the Federal Motor Carrier Safety Admnistration is delegated authority to:

(a) Carry out the functions and exercise the authority vested in the Secretary by 49 U.S.C., Subtitle IV, part B:

(1) Chapter 131, relating to general provisions on transportation policy;

(2) Chapter 133, relating to administrative provisions;

(3) Chapter 135, relating to jurisdiction;

(4) Chapter 137, sections 13702(a), 13702(c)(1), 13702(c)(2), 13702(c)(3), 13704, 13707, and 13708, relating to rates, routes, and services;

(5) Chapter 139, relating to registration and financial responsibility requirements;

(6) Chapter 141, subchapter I and sections 14121 and 14122 of subchapter II, relating to operations of motor carriers;

(7) Chapter 145, sections 14501, 14502, 14504, and 14504a relating to Federal-State relations, and section 14506 relating to identification of vehicles;

(8) Chapter 147, sections 14701 through 14708, 14710, and 14711, relating to enforcement remedies, investigations and motor carrier liability; and

(9) Chapter 149, sections 14901 through 14912 and 14915 relating to civil and criminal penalties for violations of 49 U.S.C. subtitle IV, part B.

(b) Carry out the functions and exercise the authority vested in the Secretary by sections 104, 403(a), and 408 of the ICC Termination Act of 1995, Public Law 104–88, 109 Stat. 803, relating to miscellaneous motor carrier provisions, railroad-highway grade crossing regulation and fatigue-related issues pertaining to commercial motor vehicle safety.

(c) Carry out the functions vested in the Secretary by 42 U.S.C. 4917 relating to procedures for the inspection, surveillance and measurement of commercial motor vehicles for compliance with interstate motor carrier noise emission standards and related enforcement activities including the promulgation of necessary regulations.

(d)(1) Except as delegated by §1.74(a), carry out the functions vested in the Secretary by 49 U.S.C. 5121(a), (b), (c), and (d), 5122, 5123, and 5124, with particular emphasis on the transportation or shipment of hazardous materials by highway.

(2) Carry out the functions vested in the Secretary by 49 U.S.C. 5112 relating to highway routing of hazardous materials; 49 U.S.C. 5109 relating to motor carrier safety permits, except subsection (f); 49 U.S.C. 5113 relating to unsatisfactory safety ratings of motor carriers; 49 U.S.C. 5125(a) and (c)–(f), relating to preemption determinations or waivers of preemption of hazardous

materials highway routing requirements; 49 U.S.C. 5105(e) relating to inspections of motor vehicles carrying hazardous material; and 49 U.S.C. 5119 relating to uniform forms and procedures.

(e) Carry out the functions vested in the Secretary by:

(1) 49 U.S.C. chapter 313 relating to commercial motor vehicle operators, including the requirement of section 31305(a)(5)(C) that States issue a hazardous materials endorsement to a commercial driver's license only after being informed pursuant to 49 U.S.C. 5103a that the applicant does not pose a security risk warranting denial of the license; and

(2) Section 4123(c), (d) and (e) of Public Law 109–59, 119 Stat. 1735 (Aug. 10, 2005) relating to grants, funding, and contract authority and availability, respectively, for commercial driver's license information system modernization.

(f) Carry out the functions vested in the Secretary by 49 U.S.C. 13906, 31138 and 31139 relating to financial responsibility requirements for motor carriers, brokers, and freight forwarders.

(g) Carry out the functions vested in the Secretary by subchapters I, III, and IV of chapter 311, title 49, U.S.C., relating to commercial motor vehicle programs, safety regulation, and international activities, except that the authority to promulgate safety standards for commercial motor vehicles and equipment subsequent to initial manufacture is limited to standards that are not based upon and similar to a Federal Motor Vehicle Safety Standard promulgated under chapter 301 of title 49, U.S.C.

(h) Carry out the functions vested in the Secretary by 49 U.S.C. 5701 relating to food transportation inspections of commercial motor vehicles; and 5113 and 31144 relating to safety fitness of owners and operators.

(i) Carry out the functions vested in the Secretary by 49 U.S.C. 5118 relating to the use of inspectors to promote safety in the highway transportation of radioactive material; and 49 U.S.C. 31142(f) relating to application of State regulations to government-leased vehicles and operators.

(j) Carry out the functions and exercise the authority delegated to the Secretary in section 2(d)(2) of Executive Order 12777 (3 CFR, 1992 Comp., p. 351), with respect to highway transportation, relating to the approval of means to ensure the availability of private personnel and equipment to remove, to the maximum extent practicable, a worst case discharge, the review and approval of response plans, and the authorization of motor carriers, subject to the Federal Water Pollution Control Act (33 U.S.C. 1321), to operate without approved response plans, except as delegated in 49 CFR 1.46(m).

(k) Carry out 49 U.S.C. 31503 as it relates to investigation of the need for regulation of qualifications and maximum hours of service of employees of motor carriers and motor private carriers.

(l) Carry out 49 U.S.C. 31502 relating generally to qualifications and maximum hours of service of employees and safety of operation and equipment of motor carriers, motor private carriers and motor carriers of migrant workers, except that the authority to promulgate safety standards for commercial motor vehicles and equipment subsequent to initial manufacture is limited to standards that are not based upon and similar to a Federal Motor Vehicle Safety Standard promulgated under chapter 301 of title 49, U.S.C.

(m) Carry out 49 U.S.C. 503 and 31504 relating generally to service of process, designation of agents to receive service of process, and identification of interstate motor vehicles so far as they pertain to motor private carriers of property and motor carriers of migrant workers (except motor contract carriers).

(n) Carry out 49 U.S.C. 502, 504, 506, and 523 to the extent they relate to motor carriers, motor carriers of migrant workers, and motor private carriers; 49 U.S.C. 507 to the extent it relates to motor carriers, motor carries of migrant workers, motor private carriers, or freight forwarders; and 49 U.S.C. 505, 508, and 521(b)(1), (2), (3), (4), (5), and (7).

(o) Carry out the functions and exercise the authority vested in the Secretary by 23 U.S.C. 502(a)(1)(A).

(p) Carry out the functions vested in the Secretary by 49 U.S.C. 14123, relating to the collection and dissemination of information on motor carriers.

(q) Carry out the functions vested in the Secretary by the following sections of Public Law 109–59, 119 Stat. 1144 (Aug. 10, 2005):

(1) Section 4105(b)(1) relating to the study concerning predatory tow truck operations;

(2) Section 4126 relating to the commercial vehicle information systems and networks program;

(3) Section 4128 relating to grants under the safety data improvement program;

(4) Section 4129 relating to the operation of commercial motor vehicles by individuals who use insulin to treat diabetes mellitus;

(5) Section 4130 relating to the operators of vehicles transporting agricultural commodities and farm supplies;

(6) Section 4131 relating to the maximum hours of service for operators of ground water well drilling rigs;

(7) Section 4132 relating to hours of service for operators of utility service vehicles;

(8) Section 4133 relating to hours of service rules for operators providing transportation to movie production sites;

(9) Section 4134 relating to the grant program for persons to train operators of commercial motor vehicles;

(10) Section 4135 relating to the task force concerning commercial driver's license program;

(11) Section 4139(a)(1) relating to the training of and outreach to State personnel; section (b)(1) relating to a review of Canadian and Mexican compliance with Federal motor vehicles safety standards; and the first sentence of section (b)(2) relating to the report concerning the findings and conclusions of the review required by section (b)(1);

(12) Section 4146 relating to an hours-of-service exception during harvest periods;

(13) Section 4147 relating to emergency conditions requiring immediate response;

(14) Section 4213 relating to the establishment of a working group for the development of practices and procedures to enhance Federal-State relations;

(15) Section 4214 relating to consumer complaint information;

(16) Section 5503 relating to the motor carrier efficiency study; and

(17) Section 5513(a), under the condition of section (m), relating to the research grant for a thermal imaging inspection system demonstration project.

[64 FR 56270, Oct. 19, 1999, as amended at 64 FR 58357, Oct. 29, 1999; 65 FR 221, Jan. 4, 2000; 65 FR 41015, July 3, 2000; 65 FR 49765, Aug. 15, 2000; 67 FR 11582, Mar. 15, 2002; 68 FR 10989, Mar. 7, 2003; 69 FR 51010, Aug. 17, 2004; 71 FR 30833, May 31, 2006; 71 FR 52753, Sept. 7, 2006]

§ 1.74 Delegations to the Under Secretary for Transportation Policy.

The Under Secretary for Transportation Policy is delegated authority to:

(a) Lead the development of transportation policy and serve as the principal adviser to the Secretary on all transportation policy matters.

(b) Carry out the functions and exercise the authority vested in the Secretary by section 11143 of Public Law 109–59, Stat. 1144, titled ''Safe, Accountable, Flexible, Efficient Transportation Equity Act: A Legacy for Users'' to manage the day-to-day activities associated with implementation of section 11143 regarding tax-exempt financing of highway projects and rail-truck facilities. The Under Secretary of Transportation for Policy may further delegate this authority.

[71 FR 30833, May 31, 2006, as amended at 71 FR 52754, Sept. 7, 2006]

APPENDIX A TO PART 1—DELEGATIONS AND REDELEGATIONS BY SECRETARIAL OFFICERS

1. *Director of Budget.* The Assistant Secretary for Budget and Programs has redelegated to the Director of Budget authority to:

(a) Request apportionment and reapportionment of funds by the Office of Management and Budget, provided that no request for apportionment or reapportionment which anticipates the need for a supplemental appropriation shall be submitted to the Office of Management and Budget without appropriate certification by the Secretary.

(b) Issue allotments or allocations of funds to components of the Department.

2. *Chief Counsels.* The General Counsel has delegated to the Chief Counsels the authority delegated to the General Counsel by Amendment 1–41 to part 1 of title 49, Code of

Federal Regulations, 35 FR 17653, November 17, 1970, as follows:

Section 855 of the Revised Statutes, as amended by Public Law 91–393, 84 Stat. 835 (40 U.S.C. 255) authorizes the Attorney General to delegate to other departments and agencies his authority to give written approval of the sufficiency to the title to land being acquired by the United States. The Attorney General has delegated to the Assistant Attorney General in charge of the Land and Natural Resources Division the authority to make delegations under that law to other Federal departments and agencies (35 FR 16084; 28 CFR 0.66). The Assistant Attorney General, Land and Natural Resources Division, has further delegated certain responsibilities in connection with the approval of the sufficiency of the title to land to the Department of Transportation as follows:

DELEGATION TO THE DEPARTMENT OF TRANSPORTATION FOR THE APPROVAL OF THE TITLE TO LANDS BEING ACQUIRED FOR FEDERAL PUBLIC PURPOSES

Pursuant to the provision of Public Law 91–393, approved September 1, 1970, 84 Stat. 835, amending R.S. 355 (40 U.S.C. 255), and acting under the provisions of Order No. 440–70 of the Attorney General, dated October 2, 1970, the responsibility for the approval of the sufficiency of the title to land for the purpose for which the property is being acquired by purchase or condemnation by the United States for the use of your Department is, subject to the general supervision of the Attorney General and to the following conditions, hereby delegated to your Department.

This delegation of authority is further subject to:

1. Compliance with the regulations issued by the Assistant Attorney General on October 2, 1970, a copy of which is enclosed.

2. This delegation is limited to:

(a) The acquisition of land for which the title evidence, prepared in compliance with these regulations, consists of a certificate of title, title insurance policy, or an owner's duplicate Torrens certificate of title.

(b) The acquisition of lands valued at $100,000 or less, for which the title evidence consists of abstracts of title or other types of title evidence prepared in compliance with said regulations.

As stated in the above-mentioned Act, any Federal department or agency which has been delegated the responsibility to approve land titles under the Act may request the Attorney General to render his opinion as to the validity of the title to any real property or interest therein, or may request the advice or assistance of the Attorney General in connection with determinations as to the sufficiency of titles.

The Chief Counsels of the Federal Aviation Administration, Federal Highway Administration, Federal Railroad Administration, National Highway Traffic Safety Administration, Federal Transit Administration, the St. Lawrence Seaway Development Corporation, Maritime Administration, and Research and Special Programs Administration are hereby authorized to approve the sufficiency of the title to land being acquired by purchase of condemnation by the United States for the use of their respective organizations. This delegation is subject to the limitations imposed by the Assistant Attorney General, Land and Natural Resources Division, in his delegation to the Department of Transportation. Redelegation of this authority may only be made by the Chief Counsels to attorneys within their respective organizations.

If his organization does not have an attorney experienced and capable in the examination of title evidence, a Chief Counsel may, with the concurrence of the General Counsel, request the Attorney General to (1) furnish an opinion as to the validity of a title to real property or interest therein, or (2) provide advice or assistance in connection with determining the sufficiency of the title.

(49 CFR 1.45(a) and 1.53(a); 49 U.S.C. 322)

[Amdt. 1–113, 40 FR 43901, Sept. 24, 1975]

EDITORIAL NOTE: For FEDERAL REGISTER citations affecting appendix A to part 1, see the List of CFR Sections Affected which appears in the Finding Aids section of the printed volume and on GPO Access.

PART 3—OFFICIAL SEAL

AUTHORITY: 49 U.S.C. 102(e).

SOURCE: Amdt. 3–3, 45 FR 75666, Nov. 17, 1980, unless otherwise noted.

§ 3.1 Description.

The official seal of the Department of Transportation is described as follows: A white abstract triskelion figure signifying motion appears within a circular blue field. The figure is symmetrical. The three branches of the figure curve outward in a counter-clockwise direction, each tapering almost to a point at the edge of the field. Surrounding the blue circle is a circular ring of letters. The upper half of the ring shows the words ''Department of Transportation''. The lower half of the ring shows the words ''United States of America''. The letters may be shown in either black or medium gray. The official seal of the Department is modified when embossed. It appears below in black and white.

PART 5—RULEMAKING PROCEDURES

Subpart A—General

Sec.
5.1 Applicability.
5.3 Initiation of rulemaking.
5.5 Participation by interested persons.
5.7 Regulatory docket.

Subpart B—Petitions for Rulemaking or Exemptions

5.11 Filing of petitions.
5.13 Processing of petitions.

Subpart C—Procedures

5.21 General.
5.23 Contents of notices.
5.25 Petitions for extension of time to comment.
5.27 Consideration of comments received.
5.29 Additional rulemaking proceedings.
5.31 Hearings.
5.33 Adoption of final rules.
5.35 Procedures for direct final rulemaking.

APPENDIX A TO PART 5

AUTHORITY: Sec. 9, 80 Stat. 944 (49 U.S.C. 1657).

SOURCE: 32 FR 10363, July 14, 1967, unless otherwise noted.

Subpart A—General

§ 5.1 Applicability.

(a) This part prescribes general rulemaking procedures that apply to the issuance, amendment, and repeal of rules of the Office of the Secretary of Transportation. It does not apply to rules issued by the Federal Aviation Administration, Federal Highway Administration, Federal Railroad Administration, Federal Transit Administration, Maritime Administration, National Highway Traffic Safety Administration, Research and Special Programs Administration, St. Lawrence Seaway Development Corporation, or Federal Motor Carrier Safety Administration.

(b) For the purposes of this part, *Secretary* means the Secretary of Transportation or the Under Secretary of Transportation, or any of the following to whom the Secretary has delegated authority to conduct rulemaking proceedings:

(1) Any Assistant Secretary.

(2) The General Counsel.

Any of these officers may redelegate that authority to the head of any office who reports to him.

(c) Records relating to rulemaking proceedings are available for inspection as provided in part 7 of this subtitle.

[32 FR 10363, July 14, 1967, as amended by Amdt. 5–2, 35 FR 5331, Mar. 31, 1970; Amdt. 5–3, 36 FR 430, Jan. 13, 1971; 69 FR 4457, Jan. 30, 2004]

§ 5.3 Initiation of rulemaking.

The Secretary initiates rulemaking on his own motion. However, in doing so, he may, in his discretion, consider the recommendations of other agencies of the United States and of other interested persons.

§ 5.5 Participation by interested persons.

Any person may participate in rulemaking proceedings by submitting written information or views. The Secretary may also allow any person to participate in additional rulemaking proceedings, such as informal appearances or hearings, held with respect to any rule.

§ 5.7 Regulatory docket.

(a) Records of the Office of the Secretary of Transportation concerning rulemaking actions, including notices of proposed rule making, comments received in response to those notices, petitions for rulemaking or exemption,

petitions for rehearing or reconsideration, grants and denials of exemptions, denials of petitions for rule making, and final rules are maintained in current docket form in the Office of the General Counsel.

(b) Any person may examine any docketed material at that office and may obtain a copy of any docketed material upon payment of the prescribed fee.

Subpart B—Petitions for Rulemaking or Exemptions

§ 5.11 Filing of petitions.

(a) Any person may petition the Secretary to issue, amend, or repeal a rule, or for a permanent or temporary exemption from any rule.

(b) Each petition filed under this section must:

(1) Be submitted in duplicate to the Docket Clerk, Office of the General Counsel, Department of Transportation, Washington, DC 20590;

(2) Set forth the text or substance of the rule or amendment proposed, or of the rule from which the exemption is sought, or specify the rule that the petitioner seeks to have repealed, as the case may be;

(3) Explain the interest of the petitioner in the action requested including, in the case of a petition for an exemption, the nature and extent of the relief sought and a description of the persons to be covered by the exemption;

(4) Contain any information and arguments available to the petitioner to support the action sought; and

(5) In the case of a petition for exemption, unless good cause is shown in that petition, be submitted at least 60 days before the proposed effective date of the exemption.

§ 5.13 Processing of petitions.

(a) *General.* Each petition received under § 5.11 of this part is referred to the head of the office responsible for the subject matter of that petition. No public hearing, argument, or other proceeding is held directly on a petition before its disposition under this section.

(b) *Grants.* If the Secretary determines that the petition contains adequate justification, he initiates rulemaking action under subpart C of this part or grants the exemption, as the case may be.

(c) *Denials.* If the Secretary determines that the petition does not justify initiating rule-making action or granting the exemption, he denies the petition.

(d) *Notification.* Whenever the Secretary determines that a petition should be granted or denied, the office concerned and the Office of the General Counsel prepare a notice of that grant or denial for issuance to the petitioner, and the Secretary issues it to the petitioner.

Subpart C—Procedures

§ 5.21 General.

(a) Unless the Secretary finds, for good cause, that notice is impractical, unnecessary, or contrary to the public interest, a notice of proposed rule making is issued and interested persons are invited to participate in the rulemaking proceedings with respect to each substantive rule.

(b) Unless the Secretary determines that notice and public rulemaking proceedings are necessary or desirable, interpretive rules, general statements of policy, and rules relating to organization, procedure, or practice are prescribed as final without notice or other public rulemaking proceedings.

(c) In his discretion, the Secretary may invite interested persons to participate in the rulemaking proceedings described in § 5.29 of this subpart.

(d) For rules for which the Secretary determines that notice is unnecessary because no adverse public comment is anticipated, the direct final rulemaking procedure described in § 5.35 of this subpart may be followed.

[32 FR 10363, July 14, 1967, as amended at 69 FR 4458, Jan. 30, 2004]

§ 5.23 Contents of notices.

(a) Each notice of proposed rulemaking is published in the FEDERAL REGISTER, unless all persons subject to it are named and are personally served with a copy of it.

(b) Each notice, whether published in the FEDERAL REGISTER or personally served, includes:

(1) A statement of the time, place, and nature of the proposed rule-making proceeding;

(2) A reference to the authority under which it is issued;

(3) A description of the subjects or issues involved or the substance or terms of the proposed rule;

(4) A statement of the time within which written comments must be submitted and the required number of copies; and

(5) A statement of how and to what extent interested persons may participate in the proceeding.

§ 5.25 Petitions for extension of time to comment.

(a) Any person may petition the Secretary for an extension of time to submit comments in response to a notice of proposed rulemaking. The petition must be submitted in duplicate not later than 3 days before expiration of the time stated in the notice. The filing of the petition does not automatically extend the time for petitioner's comments.

(b) The Secretary grants the petition only if the petitioner shows a substantive interest in the proposed rule and good cause for the extension, and if the extension is in the public interest. If an extension is granted, it is granted as to all persons and is published in the FEDERAL REGISTER.

§ 5.27 Consideration of comments received.

All timely comments are considered before final action is taken on a rulemaking proposal. Late filed comments may be considered so far as possible without incurring additional expense or delay.

§ 5.29 Additional rulemaking proceedings.

The Secretary may initiate any further rulemaking proceedings that he finds necessary or desirable. For example, he may invite interested persons to present oral arguments, participate in conferences, appear at informal hearings, or participate in any other proceeding.

§ 5.31 Hearings.

(a) Sections 556 and 557 of title 5, United States Code, do not apply to hearings held under this part. As a fact-finding proceeding, each hearing is nonadversary and there are no formal pleadings or adverse parties. Any rule issued in a case in which a hearing is held is not necessarily based exclusively on the record of the hearing.

(b) The Secretary designates a representative to conduct any hearing held under this part. The General Counsel designates a member of his staff to serve as legal officer at the hearing.

§ 5.33 Adoption of final rules.

Final rules are prepared by representatives of the office concerned and the Office of the General Counsel. The rule is then submitted to the Secretary for his consideration. If the Secretary adopts the rule, it is published in the FEDERAL REGISTER, unless all persons subject to it are named and are personally served with a copy of it.

§ 5.35 Procedures for direct final rulemaking.

(a) Rules that the Secretary judges to be noncontroversial and unlikely to result in adverse public comment may be published as direct final rules. These include noncontroversial rules that:

(1) Affect internal procedures of the Office of the Secretary, such as filing requirements and rules governing inspection and copying of documents,

(2) Are nonsubstantive clarifications or corrections to existing rules,

(3) Update existing forms,

(4) Make minor changes in the substantive rules regarding statistics and reporting requirements,

(5) Make changes to the rules implementing the Privacy Act, and

(6) Adopt technical standards set by outside organizations.

(b) The FEDERAL REGISTER document will state that any adverse comment or notice of intent to submit adverse comment must be received in writing by the Office of the Secretary within the specified time after the date of publication and that, if no written adverse comment or written notice of intent to submit adverse comment is received,

the rule will become effective a specified number of days after the date of publication.

(c) If no written adverse comment or written notice of intent to submit adverse comment is received by the Office of the Secretary within the specified time of publication in the FEDERAL REGISTER, the Office of the Secretary will publish a notice in the FEDERAL REGISTER indicating that no adverse comment was received and confirming that the rule will become effective on the date that was indicated in the direct final rule.

(d) If the Office of the Secretary receives any written adverse comment or written notice of intent to submit adverse comment within the specified time of publication in the FEDERAL REGISTER, a notice withdrawing the direct final rule will be published in the final rule section of the FEDERAL REGISTER and, if the Office of the Secretary decides a rulemaking is warranted, a notice of proposed rulemaking will be published in the proposed rule section of the FEDERAL REGISTER.

(e) An ''adverse'' comment for the purpose of this subpart means any comment that the Office of the Secretary determines is critical of the rule, suggests that the rule should not be adopted, or suggests a change that should be made in the rule. A comment suggesting that the policy or requirements of the rule should or should not also be extended to other Departmental programs outside the scope of the rule is not adverse.

[69 FR 4458, Jan. 30, 2004]

APPENDIX A TO PART 5

Pursuant to §5.1(b), the following officials of the Office of the Secretary of Transportation are authorized to conduct rulemaking proceedings under this part, as specified in this appendix:

(1) The General Counsel is authorized to conduct all rule-making proceedings, except the issuance of final rules, under the Act of March 19, 1918, ch. 24, as amended (15 U.S.C. 261–264); the Uniform Time Act of 1966 (80 Stat. 107, 15 U.S.C. 260–267); and section 6(e)(5) of the Department of Transportation Act (80 Stat. 939, 49 U.S.C. 1655 (e)(5)).

(2) The General Counsel is authorized to determine the practicability of applying the standard time of any standard time zone to the movements of any common carrier engaged in interstate or foreign commerce, and, under section 2 of the Act of March 19, 1918, ch. 24, as amended (15 U.S.C. 262), to issue operating exceptions in any case in which he determines that it is impractical to apply the standard time.

[Amdt. 5–1, 32 FR 11473, Aug. 9, 1967]

PART 6—IMPLEMENTATION OF EQUAL ACCESS TO JUSTICE ACT IN AGENCY PROCEEDINGS

Subpart A—General Provisions

Sec.

6.1 Purpose of these rules.
6.3 Applicability.
6.5 Proceedings covered.
6.7 Eligibility of applications.
6.9 Standards for awards.
6.11 Allowable fees and expenses.
6.13 Delegations of authority.

Subpart B—Information Required from Applicants

6.17 Contents of application.
6.19 Net worth exhibit.
6.21 Documentation of fees and expenses.

Subpart C—Procedures for Considering Applications

6.23 Filing and service of documents.
6.25 Answer to application.
6.27 Comments by other parties.
6.29 Settlement.
6.31 Further proceedings.
6.33 Decision.
6.35 Agency review.
6.37 Judicial review.
6.39 Payment of award.

AUTHORITY: 5 U.S.C. 504; 28 U.S.C. 2412.

SOURCE: 48 FR 1070, Jan. 10, 1983, unless otherwise noted.

Subpart A—General Provisions

§ 6.1 Purpose of these rules.

The Equal Access to Justice Act, 5 U.S.C. 504 (called ''the Act'' in this part), provides for the award of attorney fees and other expenses to eligible individuals and entities who are parties to certain administrative proceedings (called ''adversary adjudications'') before government agencies, such as the Department of Transportation or any of its operating administrations. The rules in this part describe the parties eligible for awards and the proceedings that are covered. They also explain

how to apply for awards, and the procedures and standards that this agency will use to make them. The use of the term ''Department'', in this rule, will be understood to mean the Department of Transportation or any of its operating administrations, unless otherwise specified. The term ''agency counsel'' will be understood to mean counsel for the Department of Transportation or any of its operating administrations.

[48 FR 1070, Jan. 10, 1983, as amended at 62 FR 19233, Apr. 21, 1997]

§ 6.3 Applicability.

Section 6.9(a) applies to any adversary adjudication pending before the Department on or after October 1, 1981. In addition, applicants for awards must also meet the standards of § 6.9(b) for any adversary adjudication commenced on or after March 29, 1996.

[62 FR 19233, Apr. 21, 1997]

§ 6.5 Proceedings covered.

(a) The Act applies to adversary adjudications conducted by the Department of Transportation. These are adjudications under 5 U.S.C. 554 in which the position of the Department is represented by an attorney or other representative who enters an appearance and participates in the proceeding. Coverage of the Act begins at designation of a proceeding or issuance of a charge sheet. Any proceeding in which the Department may prescribe or establish a lawful present or future rate is not covered by the Act. Proceedings to grant or renew licenses are also excluded, but proceedings to modify, suspend, or revoke licenses are covered if they are otherwise ''adversary adjudications.'' For the Department of Transportation, the types of proceedings covered include, but may not be limited to: Coast Guard suspension or revocation of licenses, certificates or documents under 46 U.S.C. 7701 *et seq.*; Coast Guard class II civil penalty proceedings under the Clean Water Act, 33 U.S.C. 1321(b)(6)(B)(ii); Coast Guard class II penalty proceedings under the Comprehensive Environmental Response, Compensation and Liability Act, 42 U.S.C. 9609(b); suspension and revocation of Certificates of Registry proceedings for Great Lakes Pilots pursuant to 46 CFR Part 401; National Highway Traffic Safety Administration (NHTSA) automotive fuel economy enforcement under 49 U.S.C. Chapter 329 (49 CFR Part 511); Federal Highway Administration (FHWA) enforcement of motor carrier safety regulations under 49 U.S.C. 521 and 5123 (49 CFR 386); the Department's aviation economic enforcement proceedings conducted by its Office of Aviation Enforcement and Proceedings pursuant to 49 U.S.C. Subtitle VII, 14 CFR Chapter II. Also covered are any appeal of a decision made pursuant to section 6 of the Contract Disputes Act of 1978 (41 U.S.C. 605) before an agency board of contract appeals as provided in section 8 of that Act (41 U.S.C. 607), any hearing conducted under Chapter 38 of title 31, and the Religious Freedom Restoration Act of 1993, 42 U.S.C. 2000bb *et seq*.

(b) If a proceeding includes both matters covered by the Act and matters specifically excluded from coverage, any award made will include only fees and expenses related to covered issues.

[48 FR 1070, Jan. 10, 1983, as amended at 62 FR 19233, Apr. 21, 1997]

§ 6.7 Eligibility of applications.

(a) To be eligible for an award of attorney fees and other expenses under the Act, the applicant must be a party to an adversary adjudication for which it seeks an award. The term ''party'' is defined in 5 U.S.C. 504(b)(1)(B). The applicant must show that it meets all conditions of eligibility set out in this subpart and in paragraph (b) of this section.

(b) The types of eligible applicants are as follows:

(1) An individual with a net worth of not more than $2 million;

(2) The sole owner of an unincorporated business who has a net worth of not more than $7 million, including both personal and business interests, and not more than 500 employees.

(3) A charitable or other tax-exempt organization as described in section 501(c)(3) of the Internal Revenue Code (26 U.S.C. 501(c)(3)) with not more than 500 employees;

(4) A cooperative association as defined in section 15(a) of the Agricultural Marketing Act (12 U.S.C. 1141j(a))

with a net worth of not more than $5 million and not more than 500 employees.

(5) Any other partnership, corporation, association, or public or private organization with a net worth of not more than $7 million and not more than 500 employees.

(6) For the purposes of §6.9(b), eligible applicants include small entities as defined in 5 U.S.C. 601.

(c) For the purpose of eligibility, the net worth and number of employees of an applicant shall be determined as of the date the proceeding was designated.

(d) An applicant who owns an unincorporated business will be considered an ''individual'' rather than a ''sole owner of an unincorporated business'' if the issues on which the applicant prevails are related primarily to personal interests rather than to business interests.

(e) The number of employees of an applicant includes all persons who regularly perform services for remuneration for the applicant, under the applicant's direction and control. Part-time employees shall be included on a proportional basis.

(f) The net worth and number of employees of the applicant and all of its affiliates shall be aggregated to determine eligibility. Any individual, corporation or other entity that directly or indirectly controls or owns a majority of the voting shares or other interest of the applicant, or any corporation or other entity of which the applicant directly or indirectly owns or controls a majority of the voting shares or other interest, will be considered an affiliate for purposes of this part, unless the administrative law judge determines that such treatment would be unjust and contrary to the purposes of the Act in light of the actual relationship between the affiliated entities. In addition, the administrative law judge may determine that financial relationships of the applicant other than those described in this paragraph constitute special circumstances that would make an award unjust.

(g) An applicant that participates in a proceeding primarily on behalf of one or more other persons or entities that would be ineligible is not itself eligible for an award.

(h) An applicant who appears *pro se* in a proceeding is ineligible for award of attorney fees. However, eligibility for other expenses is not affected by *pro se* representation.

[48 FR 1070, Jan. 10, 1983, as amended at 62 FR 19234, Apr. 21, 1997]

§ 6.9 Standards for awards.

(a) An eligible applicant may receive an award for fees and expenses incurred by that party in connection with a decision in favor of the applicant in a proceeding covered by this Part, unless the position of the Department over which the applicant has prevailed was substantially justified or special circumstances make the award sought unjust. The burden of proof that an award should not be made to an eligible applicant is on the Department where it has initiated the proceeding. No presumption arises that the Department's position was not substantially justified simply because the Department did not prevail. Whether or not the position of the Department was substantially justified shall be determined on the basis of the administrative record, as a whole, in the adversary adjudication for which fees and other expenses are sought. The ''position of the Department'' means, in addition to the position taken by the agency in the adversary adjudication, the action or failure to act by the Department upon which the adversary adjudication may be based.

(b) In the context of a Departmental proceeding to enforce a party's compliance with a statutory or regulatory requirement, if the demand by the Department is substantially in excess of the amount awarded to the government pursuant to the decision of the adjudicative officer and is unreasonable when compared with such decision, under the facts and circumstances of the case, the adjudicative officer shall award to an eligible applicant party the fees and expenses related to defending against the excessive demand, unless the applicant party has committed a willful violation of law or otherwise acted in bad faith, or special circumstances make an award unjust. Fees and expenses awarded under this

paragraph shall be paid only as a consequence of appropriations provided in advance. As used in this section, ''demand'' means the express demand of the Department which led to the adversary adjudication, but does not include a recitation by the Department of the maximum statutory penalty

(i) In the administrative complaint, or

(ii) Elsewhere when accompanied by an express demand for a lesser amount.

(c) The decision of the Department on the application for fees and other expenses shall be the final administrative decision under this section.

(d) An award will be reduced or denied if the applicant has unduly or unreasonably protracted the proceeding.

[62 FR 19234, Apr. 21, 1997]

§ 6.11 Allowable fees and expenses.

(a) Awards will be based on rates customarily charged by persons engaged in the business of acting as attorneys, agents or expert witnesses.

(b) No award for the fee of an attorney or agent under these rules may exceed $125.00 per hour. This amount shall include all other expenses incurred by the attorney or agent in connection with the case. No award to compensate an expert witness may exceed the highest market rate at which the Department pays expert witnesses, or $24.09 per hour, whichever is less.

(c) In determining the reasonableness of the fee sought for an attorney, agent or expert witness, the administrative law judge shall consider the following:

(1) If the attorney, agent or witness is in private practice, his or her customary fee for similar services, or, if an employee of the applicant, the fully allocated cost of the services;

(2) The prevailing rate for similar services in the community in which the attorney, agent or witness ordinarily performs services;

(3) The time actually spent in the representation of the applicant;

(4) The time reasonably spent in light of the difficulty or complexity of the issues in the proceeding; and

(5) Such other factors as may bear on the value of the services provided.

(d) The reasonable cost of any study, analysis, engineering report, test, project or similar matter prepared on behalf of a party may be awarded, to the extent that the charge for the service does not exceed the prevailing rate for similar services, and the study or other matter was necessary for preparation of the applicant's case.

(e) Fees may be awarded only for work performed after designation of a proceeding.

[48 FR 1070, Jan. 10, 1983, as amended at 62 FR 19234, Apr. 21, 1997]

§ 6.13 Delegations of authority.

The Secretary of Transportation delegates to the head of each operating administration of this Department the authority to take final action, other than rulemaking, on matters pertaining to the Act in actions that require section 554 proceedings. The head of each operating administration may redelegate this authority.

Subpart B—Information Required from Applicants

§ 6.17 Contents of application.

(a) An application for an award of fees and expenses under the Act shall identify the applicant and the proceeding for which an award is sought. The application shall show that the applicant has prevailed and identify the position of an agency or agencies in the proceeding that the applicant alleges was not substantially justified. Unless the applicant is an individual, the application shall also state that it did not have more than 500 employees at the time the proceeding was initiated, giving the number of employees of the applicant and describing briefly the type and purpose of its organization or business.

(b) The application shall also include a statement that the applicant's net worth does not exceed $1 million (if an individual) or $5 million (for all other applicants, including their affiliates). However, an applicant may omit this statement if:

(1) It attaches a copy of a ruling by the Internal Revenue Service that it qualifies as an organization described in section 501(c)(3) of the Internal Revenue Code (26 U.S.C. 501(c)(3)) or, in the case of a tax-exempt organization not

required to obtain a ruling from the Internal Revenue Service on its exempt status, a statement that describes the basis for the applicant's belief that it qualifies under such section; or

(2) It states that it is a cooperative association as defined in section 15(a) of the Agricultural Marketing Act (12 U.S.C. 114j(a)).

(c) The application shall state the amount of fees and expenses for which an award is sought.

(d) The application may also include any other matters that the applicant wishes this agency to consider in determining whether and in what amount an award should be made.

(e) The application shall be signed by the applicant or an authorized officer or attorney of the applicant. It shall also contain or be accompanied by a written verification under oath or under penalty of perjury that the information provided in the application is true and correct.

(f) If the applicant is a partnership, corporation, association, or organization, or a sole owner of an unincorporated business, the application shall state that it did not have more than 500 employees at the time the proceeding was initiated, giving the number of its employees and describing briefly the type and purpose of its organization or business.

§ 6.19 Net worth exhibit.

(a) Each applicant except a qualified tax-exempt organization or cooperative association must provide with its application a detailed exhibit showing the net worth of the applicant and any affiliates (as defined in this part) when the proceeding was designated. If any individual, corporation, or other entity directly or indirectly controls or owns a majority of the voting shares or other interest of the applicant, or if the applicant directly or indirectly owns or controls a majority of the voting shares or other interest of any corporation or other entity, the exhibit must include a showing of the net worth of all such affiliates or of the applicant including the affiliates. The exhibit may be in any form convenient to the applicant that provides full disclosure of the applicant's and its affiliates' assets and liabilities and is sufficient to determine whether the applicant qualifies under the standards in this subpart. The administrative law judge may require an applicant to file additional information to determine its eligibility for an award.

(b) The net worth exhibit shall describe any transfers of assets from, or obligations incurred by, the applicant or any affiliate, occurring in the one-year period prior to the date on which the proceeding was initiated, that reduced the net worth of the applicant and its affiliates below the applicable net worth ceiling. If there were no such transactions, the applicant shall so state.

(c) The net worth exhibit shall be included in the public record of the proceeding.

§ 6.21 Documentation of fees and expenses.

(a) The application shall be accompanied by full documentation of the fees and expenses, including the cost of any study, analysis, engineering report, test, project or similar matter, for which an award is sought.

(b) The documentation shall include an affidavit from any attorney, agent, or expert witness representing or appearing in behalf of the party, stating the actual time expended and the rate at which fees and other expenses were computed and describing the specific services performed.

(1) The affidavit shall state the services performed. In order to establish the hourly rate, the affidavit shall state the hourly rate which is billed and paid by the majority of clients during the relevant time periods.

(2) If no hourly rate is paid by the majority of clients because, for instance, the attorney or agent represents most clients on a contingency basis, the attorney or agent shall provide information about two attorneys or agents with similar experience, who perform similar work, stating their hourly rate.

(c) The documentation shall also include a description of any expenses for which reimbursement is sought and a statement of the amounts paid and payable by the applicant or by any other person or entity for the services provided.

(d) The administrative law judge may require the applicant to provide vouchers, receipts, or other substantiation for any expenses claimed.

(e) The administrative law judge may, within his or her discretion, make a determination as to whether a study, conducted by the applicant, was necessary to the preparation of the applicant's case.

Subpart C—Procedures for Considering Applications

§ 6.23 Filing and service of documents.

Any application for an award or other pleading or document related to an application shall be filed and served on all parties to the proceeding in the same manner as other pleadings in the proceeding.

§ 6.25 Answer to application.

(a) Within 30 calendar days after service of an application, the agency counsel may file an answer to the application. Unless the agency counsel requests an extension of time for filing or files a statement of intent to negotiate under paragraph (b) of this section, failure to file an answer within the 30-day period may be treated as a consent to the award request.

(b) If agency counsel and applicant believe that they can reach a settlement concerning the award, the agency counsel may file a statement of intent to negotiate. The filing of such a statement shall extend the time for filing an answer an additional 30 days.

(c) The answer shall explain in detail any objections to the award requested and identify the facts relied on in support of the Department's position. If the answer is based on any alleged facts not already in the record of the proceeding, the Department shall include with the answer either supporting affidavits or a request for further proceedings under § 6.3.

[48 FR 1070, Jan. 10, 1983, as amended at 62 FR 19234, Apr. 21, 1997]

§ 6.27 Comments by other parties.

Any party to a proceeding, other than the applicant and the Department may file comments on an application within 30 days after it is served or on an answer within 15 days after it is served. A commenting party may not participate further in proceedings on the application.

§ 6.29 Settlement.

The applicant and agency counsel may agree on a proposed settlement of the award before final action on the application, either in connection with a settlement of the underlying proceeding, or after the underlying proceeding has been concluded, in accordance with the agency's standard settlement procedure. If a prevailing party and the agency counsel agree on a proposed settlement of an award before an application has been filed the application shall be filed with the proposed settlement.

§ 6.31 Further proceedings.

(a) Ordinarily, the determination of an award will be made on the basis of the written record. However, on request of either the applicant or agency counsel, or on his or her own initiative, the administrative law judge may order further proceedings, such as an informal conference, oral argument, additional written submissions or an evidentiary hearing.

Such further proceedings shall be held only when necessary for full and fair resolution of the issues arising from the application, and shall be conducted as promptly as possible.

(b) A request that the administrative law judge order further proceedings under this section shall specifically identify the information sought or the disputed issues and shall explain why the additional proceedings are necessary to resolve the issues.

§ 6.33 Decision.

The administrative law judge shall issue an initial decision on the application as soon as possible after completion of proceedings on the application. The decision shall also include, if at issue, findings on whether the Department's position was substantially justified, whether the applicant unduly protracted the proceedings, or whether special circumstances make an award unjust. If the applicant has sought an award against more than one agency,

the decision shall allocate responsibility for payment or any award made among the agencies, and shall explain the reasons for the allocation made.

§ 6.35 Agency review.

Where Department review of the underlying decision is permitted, either the applicant or agency counsel, may seek review of the initial decision on the fee application, or the Department may decide to review the decision on its own initiative. If neither the applicant nor the agency counsel seeks review within 30 days after the decision is issued, it shall become final.

§ 6.37 Judicial review.

Judicial review of final agency decisions on awards may be sought as provided in 5 U.S.C. 504(c)(2).

§ 6.39 Payment of award.

An applicant seeking payment of an award from the Department of Transportation or any of its operating administrations under this part shall submit a copy of the Department of Transportation's or any of its operating administration's final decisions granting the award, accompanied by a statement that the applicant will not seek review of the decision in the United States courts. The copy of the decision and the statement should be submitted to the head of the affected operating administration or the Secretary of Transportation, where the Department of Transportation, Office of the Secretary, has initiated the proceedings.

PART 7—PUBLIC AVAILABILITY OF INFORMATION

Subpart A—General Provisions

Sec.
7.1 General.
7.2 Definitions.

Subpart B—Information Required To Be Made Public by DOT

7.3 Publication in the FEDERAL REGISTER.
7.4 Publication required.
7.5 Availability of opinions, orders, staff manuals, statements of policy, and interpretations and indices.
7.6 Deletion of identifying detail.
7.7 Access to materials and indices.
7.8 Copies.
7.9 Protection of records.
7.10 Public records.

Subpart C—Availability of Reasonably Described Records Under the Freedom of Information Act

7.11 Applicability.
7.12 Administration of subpart.
7.13 Records available.
7.14 Requests for records.
7.15 Contacts for records requested under the FOIA.
7.16 Requests for records of concern to more than one government organization.
7.17 Consultation with submitters of commercial and financial information.

Subpart D—Procedures for Appealing Decisions Not To Disclose Records and/or Waive Fees

7.21 General.

Subpart E—Time Limits

7.31 Initial determinations.
7.32 Final determinations.
7.33 Extension.

Subpart F—Fees

7.41 General.
7.42 Payment of fees.
7.43 Fee schedule.
7.44 Services performed without charge or at a reduced charge.
7.45 Transcripts.
7.46 Alternative sources of information.

AUTHORITY: 5 U.S.C. 552; 31 U.S.C. 9701; 49 U.S.C. 322; E.O. 12600, 3 CFR, 1987 Comp., p. 235.

SOURCE: Amdt. 1, 63 FR 38331, July 16, 1998, unless otherwise noted.

Subpart A—General Provisions

§ 7.1 General.

(a) This part implements 5 U.S.C. 552, and prescribes rules governing the availability to the public of DOT records. Many documents are made available to the public for inspection and copying through DOT's Primary Electronic Access Facility and public record unit locations that are discussed in subpart B of this part, which contains the DOT regulations concerning the availability to the public of opinions issued in the adjudication of cases,

policy issuances, administrative manuals, and other information made available to the public, without need for a specific request.

(b) Subpart C of this part describes the records that are not required to be disclosed on DOT's own action under this part, but that may be available upon request under FOIA.

(c) Indices are maintained to reflect all records subject to subpart B of this part, and are available for public inspection and copying as provided in subpart B.

§ 7.2 Definitions.

Unless the context requires otherwise, the following definitions apply in this part:

Act and *FOIA* mean the Freedom of Information Act, 5 U.S.C. 552, as amended.

Administrator means the head of each component of DOT and includes the Under Secretary for Security, the Commandant of the Coast Guard, the Inspector General, and the Director of the Bureau of Transportation Statistics.

Concurrence means that the approval of the person being consulted is required in order for the subject action to be taken.

Consultation means that the approval of the person being consulted is not required in order for the subject action to be taken.

Department means the Department of Transportation, including the Office of the Secretary, the Office of Inspector General, and the following DOT components, all of which may be referred to as DOT components. Means of contacting each of these DOT components appear in §7.15. This definition specifically excludes the Surface Transportation Board, which has its own FOIA regulations (49 CFR Part 1001):

(1) Federal Aviation Administration,

(2) Federal Highway Administration,

(3) Federal Motor Carrier Safety Administration,

(4) Federal Railroad Administration,

(5) National Highway Traffic Safety Administration,

(6) Federal Transit Administration,

(7) Saint Lawrence Seaway Development Corporation,

(8) Maritime Administration,

(9) Pipeline and Hazardous Materials Safety Administration, and

(10) Research and Innovative Technology Administration.

Primary Electronic Access Facility means the electronic docket facility in the DOT Headquarters Building, 1200 New Jersey Avenue, SE., Washington, DC 20590.

Reading room records are those records required to be made available to the public under 5 U.S.C. 552(a)(2) as described in §7.5 of Subpart B of this part. These records are made available through DOT's Primary Electronic Access Facility. Other records may also be made available at DOT's discretion at DOT inspection facilities, including DOT's Primary Electronic Access Facility.

Record includes any writing, drawing, map, recording, tape, film, photograph, or other documentary material by which information is preserved. The term also includes any such documentary material stored by computer.

Responsible DOT official means the head of the DOT component concerned, or the General Counsel or the Inspector General, as the case may be, or the designee of any of them, authorized to take an action under this part.

Secretary means the Secretary of Transportation or any person to whom the Secretary has delegated authority in the matter concerned.

[Amdt. 1, 63 FR 38331, July 16, 1998, as amended at 67 FR 54746, Aug. 26, 2002; 73 FR 33328, June 12, 2008]

Subpart B—Information Required To Be Made Public by DOT

§ 7.3 Publication in the Federal Register.

This section implements 5 U.S.C. 552(a)(1), and prescribes rules governing publication in the FEDERAL REGISTER of the following:

(a) Descriptions of DOT's organization, including its DOT components and the established places at which, the officers from whom, and the methods by which, the public may secure information and make submittals or obtain decisions;

(b) Statements of the general course and methods by which DOT's functions

are channeled and determined, including the nature and requirements of all formal and informal procedures available;

(c) Rules of procedure, descriptions of forms available or the places at which forms may be obtained, and instructions as to the scope and contents of all papers, reports, or examinations;

(d) Substantive rules of general applicability adopted as authorized by law and statements of general policy or interpretations of general applicability formulated and adopted by DOT; and

(e) Each amendment, revision, or repeal of any material listed in paragraphs (a) through (d) of this section.

§ 7.4 Publication required.

(a) *General.* The material described in § 7.3 will be published in the FEDERAL REGISTER. For the purposes of this paragraph, material that will reasonably be available to the class of persons affected by it will be considered to be published in the FEDERAL REGISTER if it has been incorporated by reference with the approval of the Director of the Federal Register.

(b) *Effect of nonpublication.* Except to the extent that he/she has actual and timely notice of the terms thereof, a person may not in any manner be required to resort to, or be adversely affected by, any procedure or matter required to be published in the FEDERAL REGISTER, but not so published.

§ 7.5 Availability of opinions, orders, staff manuals, statements of policy, and interpretations and indices.

(a) This section implements 5 U.S.C. 552(a)(2). It prescribes the rules governing the availability for public inspection and copying of the following reading room materials:

(1) Any final opinion (including a concurring or dissenting opinion) or order made in the adjudication of a case.

(2) Any policy or interpretation that has been adopted under DOT authority, including any policy or interpretation concerning a particular factual situation, if that policy or interpretation can reasonably be expected to have precedential value in any case involving a member of the public in a similar situation.

(3) Any administrative staff manual or instruction to staff that affects any member of the public, including the prescribing of any standard, procedure, or policy that, when implemented, requires or limits any action of any member of the public or prescribes the manner of performance of any activity by any member of the public. However, this does not include staff manuals or instructions to staff concerning internal operating rules, practices, guidelines, and procedures for DOT inspectors, investigators, law enforcement officers, examiners, auditors, and negotiators and other information developed predominantly for internal use, the release of which could significantly risk circumvention of agency regulations or statutes.

(4) Copies of all records, regardless of form or format, that have been released to any person under subpart C of this part and which, because of the nature of their subject matter, a DOT component determines have become or are likely to become the subject of subsequent requests for substantially the same records.

(5) A general index of the records listed in this paragraph.

(b) Any material listed in paragraph (a) of this section that is not made available for public inspection and copying, or that is not indexed as required by § 7.7, may not be cited, relied on, or used as precedent by DOT to affect any member of the public adversely unless the person to whose detriment it is relied on, used, or cited has had actual timely notice of the material.

(c) This section does not apply to material that is published in the FEDERAL REGISTER or covered by subpart C of this part.

§ 7.6 Deletion of identifying detail.

Whenever it is determined to be necessary to prevent a clearly unwarranted invasion of personal privacy, identifying details will be deleted from any record covered by this subpart that is published or made available for inspection. Whenever it is determined to be necessary to prevent the disclosure of information required or authorized to be withheld by another Federal statute, such information shall be deleted

from any record covered by this subpart that is published or made available for inspection. A full explanation of the justification for the deletion will accompany the record published or made available for inspection.

§ 7.7 Access to materials and indices.

(a) Except as provided in paragraph (b) of this section, material listed in §7.5 will be made available for inspection and copying to any member of the public at DOT document inspection facilities. It has been determined that it is unnecessary and impracticable to publish the index of materials in the FEDERAL REGISTER. Information as to the kinds of materials available at each facility may be obtained from the facility or the headquarters of the DOT component of which it is a part.

(b) The material listed in §7.5 that is published and offered for sale will be indexed, but is not required to be kept available for public inspection. Whenever practicable, however, it will be made available for public inspection at the appropriate DOT reading room.

(c) Each DOT component will also make the reading room records identified in section 7.5(a) that are created by DOT on or after November 1, 1996, available electronically. This includes indices of its reading room records as required by law after December 1, 1999.

§ 7.8 Copies

Copies of any material covered by this subpart that is not published and offered for sale may be ordered, upon payment of the appropriate fee, from the Docket Offices listed in §7.10. Copies will be certified upon request and payment of the fee prescribed in §7.43(f).

§ 7.9 Protection of records.

(a) Records made available for inspection and copying may not be removed, altered, destroyed, or mutilated.

(b) 18 U.S.C. 641 provides for criminal penalties for embezzlement or theft of government records.

(c) 18 U.S.C. 2071 provides for criminal penalties for the willful and unlawful concealment, mutilation or destruction of, or the attempt to conceal, mutilate, or destroy, government records.

§ 7.10 Public records.

Publicly available records are located in DOT's Primary Electronic Access Facility at 1200 New Jersey Avenue, SE., Washington, DC 20590.

(a) The Primary Electronic Access Facility maintains materials for the Office of the Secretary, including former Civil Aeronautics Board material, and materials for the DOT components. This facility is located at Room W94–128, and the hours of operation are 10:00–17:00 eastern time.

(b) Certain DOT components also maintain public record units at regional offices. These facilities are open to the public Monday through Friday except Federal holidays, during regular working hours. The Saint Lawrence Seaway Development Corporation has facilities at 180 Andrews Street, Massena, New York 13662–0520.

(c) Operating Administrations may have separate facilities for manual records. Additional information on the location and hours of operations for inspection facilities can be obtained through DOT's Primary Electronic Access Facility, at (202) 366–9322.

[73 FR 33328, June 12, 2008]

Subpart C—Availability of Reasonably Described Records Under the Freedom of Information Act

§ 7.11 Applicability.

(a) This subpart implements 5 U.S.C 552(a)(3), and prescribes the regulations governing public inspection and copying of reasonably described records under FOIA.

(b) This subpart does not apply to:

(1) Records published in the FEDERAL REGISTER, opinions in the adjudication of cases, statements of policy and interpretations, and administrative staff manuals that have been published or made available under subpart B of this part.

(2) Records or information compiled for law enforcement purposes and covered by the disclosure exemption described in §7.13(c)(7) if—

(i) The investigation or proceeding involves a possible violation of criminal law; and

(ii) There is reason to believe that—

(A) The subject of the investigation or proceeding is not aware of its pendency, and

(B) Disclosure of the existence of the records could reasonably be expected to interfere with enforcement proceedings.

(3) Informant records maintained by a criminal law enforcement component of DOT under an informant's name or personal identifier, if requested by a third party according to the informant's name or personal identifier, unless the informant's status as an informant has been officially confirmed.

§ 7.12 Administration of subpart.

Authority to administer this subpart and to issue determinations with respect to initial requests is delegated as follows:

(a) To the General Counsel for the records of the Office of the Secretary other than the Office of Inspector General.

(b) To the Inspector General for records of the Office of Inspector General.

(c) To the Administrator of each DOT component, who may redelegate to officers of that administration the authority to administer this part in connection with defined groups of records. However, each Administrator may redelegate the duties under subpart D of this part to consider appeals of initial denials of requests for records only to his or her deputy or to not more than one other officer who reports directly to the Administrator and who is located at the headquarters of that DOT component.

§ 7.13 Records available.

(a) *Policy*. It is DOT policy to make its records available to the public to the greatest extent possible, in keeping with the spirit of FOIA. This includes providing reasonably segregable information from documents that contain information that may be withheld.

(b) *Statutory disclosure requirement*. FOIA requires that DOT, on a request from a member of the public submitted in accordance with this subpart, make requested records available for inspection and copying.

(c) *Statutory exemptions*. Exempted from FOIA's statutory disclosure requirement are matters that are:

(1)(i) Specifically authorized under criteria established by Executive Order to be kept secret in the interest of national defense or foreign policy, and

(ii) In fact properly classified pursuant to such Executive order;

(2) Related solely to the internal personnel rules and practices of an agency;

(3) Specifically exempted from mandatory disclosure by statute (other than the Privacy Act or the Government in the Sunshine Act), provided that such statute—

(i) Requires that the matters be withheld from the public in such a manner as to leave not any discretion on the issue, or

(ii) Establishes particular criteria for withholding or refers to particular criteria for withholding or refers to particular types of matters to be withheld;

(4) Trade secrets and commercial or financial information obtained from a person and privileged or confidential;

(5) Inter-agency or intra-agency memorandums or letters that would not be available by law to a party other than an agency in litigation with the agency;

(6) Personnel and medical files and similar files the disclosure of which would constitute a clearly unwarranted invasion of personal privacy;

(7) Records or information compiled for law enforcement purposes, but only to the extent that the production of such law enforcement records or information—

(i) Could reasonably be expected to interfere with enforcement proceedings,

(ii) Would deprive a person of a right to a fair or an impartial adjudication,

(iii) Could reasonably be expected to constitute an unwarranted invasion of personal privacy,

(iv) Could reasonably be expected to disclose the identity of a confidential source, including a State, local, Tribal, or foreign agency or authority or any private institution that furnished information on a confidential basis, and, in the case of a record or information

compiled by a criminal law enforcement authority in the course of a criminal investigation, or by an agency conducting a lawful national security intelligence investigation, information furnished by a confidential source,

(v) Would disclose techniques and procedures for law enforcement investigations or prosecutions or would disclose guidelines for law enforcement investigations or prosecutions if such disclosure could reasonably be expected to risk circumvention of the law, or

(vi) Could reasonably be expected to endanger the life or physical safety of any individual;

(8) Contained in or related to examination, operating, or condition reports prepared by, on behalf of, or for the use of an agency responsible for the regulation or supervision of financial institutions; or

(9) Geological and geophysical information and data, including maps, concerning wells.

(d) *Deleted information.* The amount of information deleted from frequently-requested electronic records that are available in a public reading room will be indicated on the released portion of the record, unless doing so would harm an interest protected by the exemption concerned. If technically feasible, the amount of information deleted will be indicated at the place in the record where the deletion is made.

§ 7.14 Requests for records.

(a) Each person desiring access to or a copy of a record covered by this subpart shall comply with the following provisions:

(1) A written request must be made for the record.

(2) Such request should indicate that it is being made under FOIA.

(3) The envelope in which a mailed request is sent should be prominently marked: ''FOIA.''

(4) The request should be addressed to the appropriate office as set forth in § 7.15.

(5) The request should state the format (*e.g.*, paper, microfiche, computer diskette, etc.) in which the information is sought, if the requestor has a preference.

(b) If the requirements of paragraph (a) of this section are not met, treatment of the request will be at the discretion of the agency. The twenty-day limit for responding to requests, described in § 7.31, will not start to run until the request has been identified, or would have been identified with the exercise of due diligence, by an employee of DOT as a request pursuant to FOIA and has been received by the office to which it should have been originally sent.

(c) *Form of requests.* (1) Each request should describe the particular record to the fullest extent possible. The request should describe the subject matter of the record, and, if known, indicate the date when it was made, the place where it was made, and the person or office that made it. If the description does not enable the office handling the request to identify or locate the record sought, that office will notify the requestor and, to the extent possible, indicate the additional data required.

(2) Each request shall—

(i) Specify the fee category (commercial use, news media, educational institution, noncommercial scientific institution, or other) in which the requestor claims the request to fall and the basis of this claim (see subpart F of this part for fees and fee waiver requirements),

(ii) State the maximum amount of fees that the requestor is willing to pay or include a request for a fee waiver, and

(iii) A request seeking a fee waiver shall, to the extent possible, address why the requestor believes that the criteria for fee waivers set out in § 7.44(f) are met.

(3) Requesters are advised that the time for responding to requests set forth in subpart E will not begin to run—

(i) If a requestor has not sufficiently identified the fee category applicable to the request,

(ii) If a requestor has not stated a willingness to pay fees as high as anticipated by DOT,

(iii) If a fee waiver request is denied and the requestor has not included an alternative statement of willingness to pay fees as high as anticipated by DOT, or

(iv) If a fee waiver request does not address fee waiver criteria.

(d) *Creation of records.* A request may seek only records that are in existence at the time the request is received. A request may not seek records that come into existence after the date on which it is received and may not require that new records be created in response to the request by, for example, combining or compiling selected items from manual files, preparing a new computer program, or calculating proportions, percentages, frequency distributions, trends, or comparisons. In those instances where DOT determines that creating a new record will be less burdensome than disclosing large volumes of unassembled material, DOT may, in its discretion, agree to creation of a new record as an alternative to disclosing existing records. Records will be provided in the form or format sought by the requestor if the record is readily reproducible in the requested format.

(e) *Search for records.* (1) Each record made available under this subpart will be made available for inspection and copying during regular business hours at the place where it is located, or photocopying may be arranged with the copied materials being mailed to the requestor upon payment of the appropriate fee. Original records ordinarily will be copied except in this instance where, in DOT's judgment, copying would endanger the quality of the original or raise the reasonable possibility of irreparable harm to the record. In these instances, copying of the original would not be in the public interest. In any event, original records will not be released from DOT custody. Original records, regardless of format, may be returned to agency service upon provision of a copy of the record to the requestor, or, in the case of a denial, upon creation and retention of a copy of the original for purposes of FOIA processing.

(2) DOT will make a reasonable effort to search for requested records in electronic form or format, unless doing so would significantly interfere with operation of the affected automated information system.

(f) If a requested record is known not to exist in the files of the agency, or to have been destroyed or otherwise disposed of, the requestor will be so notified.

(g) Fees will be determined in accordance with subpart F of this part.

(h) Notwithstanding paragraphs (a) through (g) of this section, informational material, such as news releases, pamphlets, and other materials of that nature that are ordinarily made available to the public as a part of any information program of the Government will be available upon oral or written request. A fee will be not be charged for individual copies of that material so long as the material is in supply. In addition DOT will continue to respond, without charge, to routine oral or written inquiries that do not involve the furnishing of records.

§7.15 Contacts for records requested under the FOIA.

Each person desiring a record under this subpart should submit a request in writing (via paper, facsimile, or electronic mail) to the DOT component where the records are located:

(a) FOIA Offices at 1200 New Jersey Avenue, SE., Washington, DC 20590:

(1) Office of the Secretary of Transportation, Room W94–122.

(2) Office of Inspector General, Room W73–407.

(3) Federal Highway Administration, Room E64–302.

(4) Federal Motor Carrier Safety Administration, Room W66–458.

(5) Federal Railroad Administration, Room W33–437.

(6) Federal Transit Administration, Room E42–315.

(7) National Highway Traffic Safety Administration, Room W41–311.

(8) Pipeline and Hazardous Materials Safety Administration, Room E26–109.

(9) Research and Innovative Technology Administration, Room E35–330.

(10) Maritime Administration, Room W24–233.

(b) Federal Aviation Administration, 800 Independence Avenue, S.W., Room 906A, Washington, DC 20591.

(c) United States Coast Guard, 2100 2nd Street, S.W., Room 6106, Washington, DC 20593–0001.

(d) Director, Office of Finance, Saint Lawrence Seaway Development Corporation, 180 Andrews Street, P.O. Box 520, Massena, New York 13662–0520.

(e) Federal Railroad Administration, 1120 Vermont Avenue NW, 7th Floor, Washington, DC. (Mailing address: 400 Seventh St., SW, Washington, DC 20590.)

(f) Transportation Security Administration, 301 Seventh Street, SW. (General Services Administration Regional Office Building), Room 3624, Washington, DC (Mailing address: 400 Seventh Street, SW., Washington, DC 20590).

(g) Certain DOT components also maintain FOIA contacts at regional offices and at the offices of the Commandant and District Commanders of the United States Coast Guard. Additional information on the location of these offices can be obtained through the FOIA contact offices listed in this section.

(h) If the person making the request does not know where in DOT the record is located, he or she may make an inquiry to the Chief, FOIA Division, Office of the General Counsel (voice: 202.366.4542; facsimile: 202.366.8536).

(i) Requests for records under this part, and Freedom of Information Act inquiries generally, may be made by accessing the DOT Home Page on the Internet (*www.dot.gov*) and clicking on the Freedom of Information Act link (*www.dot.gov/foia*).

[Amdt. 1, 63 FR 38331, July 16, 1998, 67 FR 54746, Aug. 26, 2002; 73 FR 33328, June 12, 2008]

§ 7.16 Requests for records of concern to more than one government organization.

(a) If the release of a record covered by this subpart would be of concern to both DOT and another Federal agency, the determination as to release will be made by DOT only after consultation with the other interested agency.

(b) If the release of the record covered by this subpart would be of concern to both DOT and a State, local, or Tribal government, a territory or possession of the United States, or a foreign government, the determination as to release will be made by DOT only after consultation with the interested government.

(c) Alternatively, DOT may refer the request (or relevant portion thereof) for decision by a Federal agency that originated or is substantially concerned with the records, but only if that agency is subject to FOIA. Such referrals will be made expeditiously and the requestor notified in writing that a referral has been made.

§ 7.17 Consultation with submitters of commercial and financial information.

(a) If a request is received for information that has been designated by the submitter as confidential commercial information, or which DOT has some other reason to believe may contain information of the type described in §7.13(c)(4), the submitter of such information will, except as is provided in paragraphs (c) and (d) of this section, be notified expeditiously and asked to submit any written objections to release. At the same time, the requestor will be notified that notice and an opportunity to comment are being provided to the submitter. The submitter will, to the extent permitted by law, be afforded a reasonable period of time within which to provide a detailed statement of any such objections. The submitter's statement shall specify all grounds for withholding any of the information. The burden shall be on the submitter to identify all information for which exempt treatment is sought and to persuade the agency that the information should not be disclosed.

(b) The responsible DOT component will, to the extent permitted by law, consider carefully a submitter's objections and specific grounds for nondisclosure prior to determining whether to disclose business information. Whenever a decision is made to disclose such information over the objection of a submitter, the office responsible for the decision will forward to the submitter a written notice of intent to disclose that will, to the extent permitted by law, be forwarded to the submitter a reasonable number of days prior to the specified date upon which disclosure is intended. At the same time the submitter is notified, the requestor will be notified of the decision to disclose information. The written notice will include:

(1) A statement of the reasons for which the submitter's disclosure objections were not accepted;

(2) A description of the business information to be disclosed; and

(3) A specific disclosure date.

(c) The notice requirements of this section will not apply if:

(1) The office responsible for the decision determines that the information should not be disclosed;

(2) The information lawfully has been published or otherwise made available to the public; or

(3) Disclosure of the information is required by law (other than 5 U.S.C. 552).

(d) The procedures established in this section will not apply in the case of:

(1) Business information submitted to the National Highway Traffic Safety Administration and addressed in 49 CFR Part 512.

(2) Information contained in a document to be filed or in oral testimony that is sought to be withheld pursuant to Rule 39 of the Rules of Practice in Aviation Economic Proceedings (14 CFR 302.39).

(e) Whenever a requestor brings suit seeking to compel disclosure of confidential commercial information, the responsible DOT component will promptly notify the submitter.

Subpart D—Procedures for Appealing Decisions Not To Disclose Records and/or Waive Fees

§7.21 General.

(a) Each officer or employee of DOT who, upon a request by a member of the public for a record under this part, makes a determination that the record is not to be disclosed, either because it is subject to an exemption or not in DOT's custody and control, will give a written statement of the reasons for that determination to the person making the request; and indicate the names and titles or positions of each person responsible for the initial determination not to comply with such request, and the availability of an appeal within DOT. The denial letter will include an estimate of the volume of records or information withheld, in number of pages or in some other reasonable form of estimation. This estimate does not need to be provided if the volume is otherwise indicated through deletions on records disclosed in part, or if providing an estimate would harm an interest protected by an applicable exemption. Records disclosed in part will be marked or annotated to show both the amount and the location of the information deleted whenever practicable.

(b) When a request for a waiver of fees pursuant to §7.44 has been denied in whole or in part, the requestor may appeal the denial.

(c) Any person to whom a record has not been made available within the time limits established by §7.31 and any person who has been given a determination pursuant to paragraph (a) of this section that a record will not be disclosed may appeal to the responsible DOT official. Any person who has not received an initial determination on his or her request within the time limits established by §7.31 can seek immediate judicial review, which may be sought without the need first to submit an administrative appeal. Judicial review may be sought in the United States District Court for the judicial district in which the requestor resides or has his or her principal place of business, the judicial district in which the records are located, or in the District of Columbia. A determination that a record will not be disclosed and/or that a request for a fee waiver or reduction will not be granted does not constitute final agency action for the purposes of judicial review unless:

(1) It was made by the responsible DOT official; or

(2) The applicable time limit has passed without a determination on the initial request or the appeal, as the case may be, having been made.

(d) Each appeal must be made in writing within thirty days from the date of receipt of the original denial and should include the DOT file or reference number assigned to the request and all information and arguments relied upon by the person making the request. (Appeals may be submitted via facsimile and conventional mail, but not via electronic mail.) Such letter should indicate that it is an appeal from a denial of a request made under

FOIA. The envelope in which a mailed appeal is sent should be prominently marked: ''FOIA Appeal.'' If these requirements are not met, the twenty-day limit described in §7.32 will not begin to run until the appeal has been identified, or would have been identified with the exercise of due diligence, by a DOT employee as an appeal under FOIA, and has been received by the appropriate office.

(e) Whenever the responsible DOT official determines it necessary, he/she may require the requestor to furnish additional information, or proof of factual allegations, and may order other proceedings appropriate in the circumstances; in any case in which a request or order is made, DOT's time for responding ceases to count while the requestor responds to the request or order. The decision of the responsible DOT official as to the availability of the record or the appropriateness of a fee waiver or reduction constitutes final agency action for the purpose of judicial review.

(f) The decision of the responsible DOT official not to disclose a record under this part or not to grant a request for a fee waiver or reduction is considered to be a denial by the Secretary for the purpose of 5 U.S.C. 552(a)(4)(B).

(g) Any final determination by the head of an DOT component not to disclose a record under this part, or not to grant a request for a fee waiver or reduction, is subject to concurrence by a representative of the General Counsel.

(h) Upon a determination that an appeal will be denied, the requestor will be informed in writing of the reasons for the denial of the request and the names and titles or positions of each person responsible for the determination, and that judicial review of the determination is available in the United States District Court for the judicial district in which the requestor resides or has his or her principal place of business, the judicial district in which the requested records are located, or the District of Columbia.

Subpart E—Time Limits

§ 7.31 Initial determinations.

An initial determination whether to release a record requested pursuant to subpart C of this part will be made within twenty Federal working days after the request is received by the appropriate office in accordance with §7.14, except that this time limit may be extended by up to ten Federal working days in accordance with §7.33. The person making the request will be notified immediately of such determination. If the determination is to grant the request, the desired record will be made available as promptly as possible. If the determination is to deny the request, the person making the request will be notified in writing, at the same time he or she is notified of such determination, of the reason for the determination, the right of such person to appeal the determination, and the name and title of each person responsible for the initial determination to deny the request.

(a) *In general.* Components ordinarily will respond to requests according to their order of receipt.

(b) *Multitrack processing.* (1) A component may use two or more processing tracks by distinguishing between simple and more complex requests based on the amount of work and/or time needed to process the request, or on the number of pages involved.

(2) A component using multitrack processing may provide requesters in its slower track(s) with an opportunity to limit the scope of their requests in order to qualify for faster processing within the specified limits of the component's faster track(s). A component doing so will contact the requestor either by telephone, letter, facsimile, or electronic mail, whichever is most efficient in each case.

(c) *Expedited processing.* (1) Requests and appeals will be taken out of order and given expedited treatment whenever a compelling need is demonstrated and it is determined that the compelling need involves:

(i) Circumstances in which the lack of expedited treatment could reasonably be expected to pose an imminent threat to the life or physical safety of an individual;

(ii) Requests made by a person primarily engaged in disseminating information, with an urgency to inform the public of actual or alleged Federal Government activity.

(2) A request for expedited processing may be made at the time of the initial request for records or at any later time. For a prompt determination, a request for expedited processing must be received by the proper component. Requests must be submitted to the component that maintains the records requested.

(3) A requestor who seeks expedited processing must submit a statement, certified to be true and correct to the best of that person's knowledge and belief, explaining in detail the basis for requesting expedited processing. For example, a requestor within the category in paragraph (c)(1)(ii) of this section, if not a full-time member of the news media, must establish that he or she is a person whose main professional activity or occupation is information dissemination, though it need not be his or her sole occupation. A requestor within the category in paragraph (c)(1)(ii) of this section also must establish a particular urgency to inform the public about the government activity involved in the request, beyond the public's right to know about government activity generally. The formality of certification may be waived as a matter of discretion.

(4) Within ten calendar days of receipt of a request for expedited processing, the proper component will decide whether to grant it and will notify the requestor of the decision. If a request for expedited treatment is granted, the request will be given priority and will be processed as soon as practicable. If a request for expedited processing is denied, any appeal of that decision will be acted on expeditiously.

§ 7.32 Final determinations.

(a) A determination with respect to any appeal made pursuant to § 7.21 will be made within twenty Federal working days after receipt of such appeal except that this time limit may be extended by up to ten Federal working days in accordance with § 7.33. The person making the request will be notified immediately of such determination pursuant to § 7.21.

(b) *In general.* Components ordinarily will respond to appeals according to their order of receipt.

(c) *Multitrack processing.* (1) A component may use two or more processing tracks by distinguishing between simple and more complex appeals based on the amount of work and/or time needed to process the appeal, or on the number of pages involved.

(2) A component using multitrack processing may provide persons making appeals in its slower track(s) with an opportunity to limit the scope of their appeals in order to qualify for faster processing within the specified limits of the component's faster track(s). A component doing so will contact the person making the appeal either by telephone, letter, facsimile, or electronic mail, whichever is most efficient in each case.

(d) *Expedited processing.* (1) An appeal will be taken out of order and given expedited treatment whenever a compelling need is demonstrated and it is determined that the compelling need involves:

(i) Circumstances in which the lack of expedited treatment could reasonably be expected to pose an imminent threat to the life or physical safety of an individual;

(ii) A request made by a person primarily engaged in disseminating information, with an urgency to inform the public of actual or alleged Federal Government activity.

(2) A request for expedited processing may be made at the time of the appeal or at any later time. For a prompt determination, a request for expedited processing must be received by the proper component, which is the component that is processing the appeal for the records requested.

(3) A requestor who seeks expedited processing must submit a statement, certified to be true and correct to the best of that person's knowledge and belief, explaining in detail the basis for requesting expedited processing. For example, a requestor within the category in § 7.31(c)(1)(ii), if not a full-time member of the news media, must establish that he or she is a person whose

main professional activity or occupation is information dissemination, though it need not be his or her sole occupation. A requestor within the category in §7.31(c)(1)(ii) also must establish a particular urgency to inform the public about the government activity involved in the request, beyond the public's right to know about government activity generally. The formality of certification may be waived as a matter of discretion. A person who was granted expedited processing under §7.31 need merely certify that the same circumstances apply.

(4) Within ten calendar days of receipt of a request for expedited processing, the proper component will decide whether to grant it and will notify the requestor of the decision. If a request for expedited treatment is granted, the appeal will be given priority and will be processed as soon as practicable. If a request for expedited processing of an appeal is denied, no further administrative recourse is available.

§ 7.33 Extension.

(a) In unusual circumstances as specified in this section, the time limits prescribed in §7.31 and §7.32 may be extended by written notice to the person making the request setting forth the reasons for such extension and the date on which a determination is expected to be dispatched. Such notice may not specify a date that would result in a cumulative extension of more than 10 Federal working days without providing the requestor an opportunity to modify the request as noted in this section. As used in this paragraph, ''unusual circumstances'' means, but only to the extent reasonably necessary to the proper processing of the particular request:

(1) The need to search for and collect the requested records from field facilities or other establishments that are separate from the office processing the request.

(2) The need to search for, collect, and appropriately examine a voluminous amount of separate and distinct records that are demanded in a single request; or

(3) The need for consultation, which will be conducted with all practicable speed, with any other agency or DOT component having a substantial interest in the determination of the request or among two or more components of the agency having substantial subject-matter interest therein.

(b) Where the extension is for more than 10 working days, the DOT component will provide the requestor with an opportunity either to modify the request so that it may be processed within the time limits or to arrange an alternative time period with the component for processing the request or a modified request.

(c) Where a component reasonably believes that multiple requests submitted by a requestor, or by a group of requesters acting in concert, constitute a single request that would otherwise involve unusual circumstances, and the requests involve clearly related matters, they may be aggregated for the purposes of fees and processing activities. Multiple requests involving unrelated matters will not be aggregated.

Subpart F—Fees

§ 7.41 General.

(a) This subpart prescribes fees for services performed for the public under subparts B and C of this part by DOT.

(b) All terms defined by FOIA apply to this subpart, and the term ''hourly rate'' means the actual hourly base pay for a civilian employee.

(c) This subpart applies to all employees of DOT, including those of nonappropriated fund activities of the Maritime Administration.

(d) This subpart does not apply to any special study, special statistical compilation, table, or other record requested under 49 U.S.C. 329(c). The fee for the performance of such a service is the actual cost of the work involved in compiling the record. All such fees received by DOT in payment of the cost of such work are deposited in a separate account administered under the direction of the Secretary, and may be used for the ordinary expenses incidental to providing the information.

(e) This subpart does not apply to requests from record subjects for records about themselves in DOT systems of

records, which are determined in accordance with the Privacy Act, as implemented by DOT regulations (49 CFR part 10).

[Amdt. 1, 63 FR 38331, July 16, 1998, as amended at 73 FR 33328, June 12, 2008]

§ 7.42 Payment of fees.

(a) The fees prescribed in this subpart may be paid by check, draft, or money order, payable to the DOT component where fees were incurred, for deposit in the General Fund of the Treasury of the United States, *e.g.* DOT/FAA.

(b) Charges may be assessed by DOT for time spent searching for requested records even if the search fails to locate records or the records located are determined to be exempt from disclosure. In addition, if records are requested for commercial use, DOT may assess a fee for time spent reviewing any responsive records located to determine whether they are exempt from disclosure.

(c) When it is estimated that the search charges, review charges, duplication fees, or any combination of fees that could be charged to the requestor will likely exceed US $25, the requestor will be notified of the estimated amount of the fees, unless the requestor has indicated in advance his or her willingness to pay fees as high as those anticipated. In cases where a requestor has been notified that actual or estimated fees may amount to more than US $25, the request will be deemed not to have been received until the requestor has agreed to pay the anticipated total fee. The notice will also inform the requestor how to consult with the appropriate DOT officials with the object of reformulating the request to meet his or her needs at a lower cost.

(d) Payment of fees may be required prior to actual duplication or delivery of any releasable records to a requestor. However, advance payment, *i.e.*, before work is commenced or continued on a request, may not be required unless:

(1) Allowable charges that a requestor may be required to pay are likely to exceed US $250; or

(2) The requestor has failed to pay within 30 days of the billing date fees charged for a previous request to any part of DOT.

(e) When paragraph (d)(1) of this section applies, the requestor will be notified of the likely cost and, where he/she has a history of prompt payment of FOIA fees, requested to furnish satisfactory assurance of full payment of FOIA fees. Where the requestor does not have any history of payment, he or she may be required to make advance payment of any amount up to the full estimated charges.

(f) When paragraph (d)(2) of this section applies, the requestor will be required to demonstrate that the fee has, in fact, been paid or to pay the full amount owed, including any applicable interest, late handling charges, and penalty charges as discussed in paragraphs (g) and (h) of this section. The requestor will also be required to make an advance payment of the full amount of the estimated fee before processing of a new request or continuation of a pending request is begun.

(g) DOT will assess interest on an unpaid bill starting on the 31st day following the day on which the notice of the amount due is first mailed to the requestor. Interest will accrue from the date of the notice of amount due and will be at the rate prescribed in 31 U.S.C. 3717. Receipt by DOT of a payment for the full amount of the fees owed within 30 calendar days after the date of the initial billing will stay the accrual of interest, even if the payment has not been processed.

(h) If payment of fees charged is not received within 30 calendar days after the date the initial notice of the amount due is first mailed to the requestor, an administrative charge will be assessed by DOT to cover the cost of processing and handling the delinquent claim. In addition, a penalty charge will be applied with respect to any principal amount of a debt that is more than 90 days past due. Where appropriate, other steps permitted by Federal debt collection statutes, including disclosure to consumer reporting agencies and use of collection agencies, will be used by DOT to encourage payment of amounts overdue.

(i) Notwithstanding any other provision of this subpart, when the total amount of fees that could be charged for a particular request (or aggregation of requests) under subpart C of this

part, after taking into account all services that must be provided free of, or at a reduced, charge, is less than US $10.00 DOT will not make any charge for fees.

§ 7.43 Fee schedule.

The rates for manual searching, computer operator/programmer time and time spent reviewing records will be calculated based on the grades and rates established by the Washington-Baltimore Federal White-Collar Pay Schedule or equivalent grades, as follows:

When performed by employees:

GS–1 through GS–8—Hourly rate of GS–5 step 7 plus 16%

GS–9 through GS–14—Hourly rate of GS–12 step 7 plus 16%

GS–15 and above—Hourly rate of GS–15 step 7 plus 16%

(a) The standard fee for a manual search to locate a record requested under subpart C of this part, including making it available for inspection, will be determined by multiplying the searcher's rate as calculated from the chart in this section and the time spent conducting the search.

(b) The standard fee for a computer search for a record requested under subpart C of this part is the actual cost. This includes the cost of operating the central processing unit for the time directly attributable to searching for records responsive to a FOIA request and the operator/programmer's rate as calculated from the chart for costs apportionable to the search.

(c) The standard fee for review of records requested under subpart C of this part is the reviewer's rate as calculated from the chart multiplied by the time he/she spent determining whether the requested records are exempt from mandatory disclosure.

(d) The standard fee for duplication of a record requested under subpart C of this part is determined as follows:

(1) Per copy of each page (not larger than 8.5×14 inches) reproduced by photocopy or similar means (includes costs of personnel and equipment)—US $0.10.

(2) Per copy prepared by computer such as tapes or printout—actual costs, including operator time.

(3) Per copy prepared by any other method of duplication—actual direct cost of production.

(e) Depending upon the category of requestor, and the use for which the records are requested, in some cases the fees computed in accordance with the standard fee schedule in paragraph (d) of this section will either be reduced or not charged, as prescribed by other provisions of this subpart.

(f) The following special services not required by FOIA may be made available upon request, at the stated fees: Certified copies of documents, with DOT or DOT component seal (where authorized)—US $4.00; or true copy, without seal—US $2.00.

§ 7.44 Services performed without charge or at a reduced charge.

(a) A fee is not to be charged to any requestor making a request under subpart C of this part for the first two hours of search time unless the records are requested for commercial use. For purposes of this subpart, when a computer search is required two hours of search time will be considered spent when the hourly costs of operating the central processing unit used to perform the search added to the computer operator's salary cost (hourly rate plus 16 percent) equals two hours of the computer operator's salary costs (hourly rate plus 16 percent).

(b) A fee is not to be charged for any time spent searching for a record requested under subpart C if the records are not for commercial use and the requestor is a representative of the news media, an educational institution whose purpose is scholarly research, or a non-commercial scientific institution whose purpose is scientific research.

(c) A fee is not to be charged for duplication of the first 100 pages (standard paper, not larger than 8.5×14 inches) of records provided to any requestor in response to a request under Subpart C unless the records are requested for commercial use.

(d) A fee is not to be charged to any requestor under subpart C to determine whether a record is exempt from mandatory disclosure unless the record is requested for commercial use. A review charge may not be charged except with

respect to an initial review to determine the applicability of a particular exemption to a particular record or portion of a record. A review charge may not be assessed for review at the administrative appeal level. When records or portions of records withheld in full under an exemption that is subsequently determined not to apply are reviewed again to determine the applicability of other exemptions not previously considered, this is considered an initial review for purposes of assessing a review charge.

(e) Documents will be furnished without charge or at a reduced charge if the official having initial denial authority determines that disclosure of the information is in the public interest because it is likely to contribute significantly to public understanding of the operations or activities of the government and is not primarily in the commercial interest of the requestor.

(f) Factors to be considered by DOT officials authorized to determine whether a waiver or reduction of fees will be granted include:

(1) Whether the subject matter of the requested records concerns the operations or activities of the Federal government;

(2) Whether the disclosure is likely to contribute to an understanding of Federal government operations or activities;

(3) Whether disclosure of the requested information will contribute to the understanding of the public at large, as opposed to the individual understanding of the requestor or a narrow segment of interested persons;

(4) Whether the contribution to public understanding of Federal government operations or activities will be significant;

(5) Whether the requestor has a commercial interest that would be furthered by the requested disclosure; and

(6) Whether the magnitude of any identified commercial interest to the requestor is sufficiently large in comparison with the public interest in disclosure that disclosure is primarily in the commercial interest of the requestor.

(g) Documents will be furnished without charge or at a reduced charge if the official having initial denial authority determines that the request concerns records related to the death of an immediate family member who was, at the time of death, a DOT employee.

(h) Documents will be furnished without charge or at a reduced charge if the official having initial denial authority determines that the request is by the victim of a crime who seeks the record of the trial at which the requestor testified.

[Amdt. 1, 63 FR 38331, July 16, 1998, as amended at 73 FR 33328, June 12, 2008]

§ 7.45 Transcripts.

Transcripts of hearings or oral arguments are available for inspection. Where transcripts are prepared by a nongovernmental contractor, and the contract permits DOT to handle the reproduction of further copies, §7.43 applies. Where the contract for transcription services reserves the sales privilege to the reporting service, any duplicate copies must be purchased directly from the reporting service.

§ 7.46 Alternative sources of information.

In the interest of making documents of general interest publicly available at as low a cost as possible, alternative sources will be arranged whenever possible. In appropriate instances, material that is published and offered for sale may be obtained from the Superintendent of Documents, U.S. Government Printing Office, Washington, DC 20402; U.S. Department of Commerce's National Technical Information Service (NTIS), Springfield, Virginia 22151; or National Audio-Visual Center, National Archives and Records Administration, Capital Heights, MD 20743–3701.

PART 8—CLASSIFIED INFORMATION: CLASSIFICATION/DECLASSIFICATION/ACCESS

Subpart A—General

Sec.

8.1 Scope.
8.3 Applicability.
8.5 Definitions.
8.7 Spheres of responsibility.

Subpart B—Classification/Declassification of Information

8.9 Information Security Review Committee.
8.11 Authority to classify information.
8.13 Authority to downgrade or declassify.
8.15 Mandatory review for classification.
8.17 Classification challenges.
8.19 Procedures for submitting and processing requests for classification reviews.
8.21 Burden of proof.
8.23 Classified information transferred to the Department of Transportation.

Subpart C—Access to Information

8.25 Personnel Security Review Board.
8.27 Public availability of declassified information.
8.29 Access by historical researchers and former Presidential appointees.
8.31 Industrial security.

AUTHORITY: E. O. 10450, 3 CFR, 1949–1953 Comp., p. 936; E. O. 12829, 3 CFR, 1993 Comp., p. 570; E. O. 12958, 3 CFR, 1995 Comp., p. 333; E. O. 12968, 3 CFR, 1995 Comp., p. 391.

SOURCE: 62 FR 23661, May 1, 1997, unless otherwise noted.

Subpart A—General

§ 8.1 Scope.

This part sets forth procedures for the classification, declassification, and availability of information that must be protected in the interest of national security, in implementation of Executive Order 12958 of April 17, 1995, ''Classified National Security Information;'' and for the review of decisions to revoke, or not to issue, national security information clearances, or to deny access to classified information, under Executive Order 12968 of August 2, 1995, ''Access to National Security Information''.

§ 8.3 Applicability.

This part applies to all elements of the Department of Transportation.

§ 8.5 Definitions.

As used in this part:

Classification means the act or process by which information is determined to be classified information.

Classification levels means the following three levels at which information may be classified:

(a) Top secret. Information that requires the highest degree of protection, and the unauthorized disclosure of which could reasonably be expected to cause exceptionally grave damage to the national security that the original classification authority is able to identify or describe.

(b) Secret. Information that requires a substantial degree of protection, and the unauthorized disclosure of which could reasonably be expected to cause serious damage to the national security that the original classification authority is able to identify or describe.

(c) Confidential. Information that requires protection and the unauthorized disclosure of which could reasonably be expected to cause damage to the national security that the original classification authority is able to identify or describe.

Classified information or ''classified national security information'' means information that has been determined under Executive Order 12958, or any predecessor or successor order, to require protection against unauthorized disclosure, and is marked to indicate its classified status when in documentary form.

Clearance means that an individual is eligible, under the standards of Executive Orders 10450 and 12968 and appropriate DOT regulations, for access to classified information.

Damage to the national security means harm to the national defense or foreign relations of the United States from the unauthorized disclosure of information, to include the sensitivity, value, and utility of that information.

Declassification means the authorized change in the status of information from classified information to unclassified information.

Downgrading means a determination by a declassification authority that information classified and safeguarded at a specific level shall be classified and safeguarded at a lower level.

Information means any knowledge that can be communicated, or documentary material, regardless of its physical form or characteristics, that is owned by, produced by or for, or is under the control of the United States Government. ''Control'' means the authority of the agency that originates

information, or its successor in function, to regulate access to the information.

Mandatory declassification review means the review for declassification of classified information in response to a request for declassification that qualifies under Section 3.6 of Executive Order 12958.

Original classification means an initial determination that information requires, in the interest of national security, protection against unauthorized disclosure.

Original classification authority means an individual authorized in writing, either by the President or by agency heads or other officials designated by the President, to classify information in the first instance.

§8.7 Spheres of responsibility.

(a) Pursuant to Section 5.6(c) of Executive Order 12958, and to section 6.1 of Executive Order 12968, the Assistant Secretary for Administration is hereby designated as the senior agency official of the Department of Transportation with assigned responsibilities to assure effective compliance with and implementation of Executive Order 12958, Executive Order 12968, Office of Management and Budget Directives, the regulations in this part, and related issuances.

(b) In the discharge of these responsibilities, the Assistant Secretary for Administration will be assisted by the Director of Security and Administrative Management, who, in addition to other actions directed by this part, will evaluate the overall application of and adherence to the security policies and requirements prescribed in this part and who will report his/her findings and recommendations to the Assistant Secretary for Administration, heads of Departmental elements, and, as appropriate, to the Secretary.

(c) Secretarial Officers and heads of Departmental elements will assure that the provisions in this part are effectively administered, that adequate personnel and funding are provided for this purpose, and that corrective actions that may be warranted are taken promptly.

Subpart B—Classification/ Declassification of Information

§8.9 Information Security Review Committee.

(a) There is hereby established a Department of Transportation Information Security Review Committee, which will have authority to:

(1) Act on all suggestions and complaints not otherwise resolved with respect to the Department's administration of Executive Order 12958 and implementing directives, including those regarding overclassification, failure to declassify, or delay in declassifying;

(2) Act on appeals of requests for classification reviews, and appeals of requests for records under 5 U.S.C. 552 (Freedom of Information Act) when the initial, and proposed final, denials are based on continued classification of the record; and

(3) Recommend to the Secretary, when necessary, appropriate administrative action to correct abuse or violation of any provision of Executive Order 12598 and implementing directives.

(b) The Information Security Review Committee will be composed of the Assistant Secretary for Administration, who will serve as Chair; the General Counsel; and the Director of Security and Administrative Management. When matters affecting a particular Departmental agency are at issue, the Associate Administrator for Administration for that agency, or the Chief of Staff for the U.S. Coast Guard, as the case may be, will participate as an ad hoc member, together with the Chief Counsel of that agency. Any regular member may designate a representative with full power to serve in his/her place.

(c) In carrying out its responsibilities to review decisions to revoke or not to issue clearances, or to deny access to classified information, the Committee will establish whatever procedures it deems fit.

§8.11 Authority to classify information.

(a) Executive Order 12958 confers upon the Secretary of Transportation

the authority to originally classify information as SECRET or CONFIDENTIAL with further authorization to delegate this authority.

(b) The following delegations of authority originally to classify information as ''Secret'' or ''Confidential'', which may not be redelegated, are hereby made:

(1) *Office of the Secretary of Transportation*. The Deputy Secretary; Assistant Secretary for Administration; Director of Intelligence and Security; Director of Security and Administrative Management.

(2) *United States Coast Guard*. Commandant; Chief, Office of Law Enforcement and Defense Operations.

(3) *Federal Aviation Administration*. Administrator; Assistant Administrator for Civil Aviation Security.

(4) *Maritime Administration*. Administrator.

(c) Although the delegations of authority set out in paragraph (b) of this section are expressed in terms of positions, the authority is personal and is invested only in the individual occupying the position. The authority may not be exercised ''by direction of'' a designated official. The formal appointment or assignment of an individual to one of the identified positions or a designation in writing to act in the absence of one of these officials, however, conveys the authority originally to classify information as ''SECRET''.

(d) Previous delegations and redelegations of authority within the Department of Transportation originally to classify information are hereby rescinded.

§ 8.13 Authority to downgrade or declassify.

Information originally classified by the Department may be specifically downgraded or declassified by either the official authorizing the original classification, if that official is still serving in the same position, the originator's current successor in function, a supervisory official of either, officials delegated declassification authority in writing by the Secretary, or by the Departmental Information Security Review Committee.

§ 8.15 Mandatory review for classification.

(a) All information classified by the Department of Transportation under Executive Order 12958 or predecessor orders shall be subject to a review for declassification if:

(1) The request for review describes the information with sufficient specificity to enable its location with a reasonable amount of effort; and

(2) The information has not been reviewed for declassification within the prior two years. If the information has been reviewed within the prior two years, or the information is the subject of pending litigation, the requestor will be informed of this fact, and of the Department's decision not to declassify the information and of his/her right to appeal the Department's decision not to declassify the information to the Interagency Security Classification Appeals Panel.

(b) All information reviewed for declassification because of a mandatory review will be declassified if it does not meet the standards for classification in Executive Order 12958. The information will then be released unless withholding is otherwise authorized and warranted under applicable law.

§ 8.17 Classification challenges.

(a) Authorized holders of information classified by the Department of Transportation who, in good faith, believe that its classification status is improper are encouraged and expected to challenge the classification status of the information before the Departmental Information Security Review Committee.

(1) No individual will be subject to retribution for bringing such a challenge; and

(2) Each individual whose challenge is denied will be advised that he/she may appeal to the Interagency Security Classification Appeals Panel established by section 5.4 of Executive Order 12958.

(b) This classification challenge provision is not intended to prevent an authorized holder of information classified by the Department of Transportation from informally questioning the classification status of particular information. Such information inquiries

should be encouraged as means to resolve classification concerns and reduce the administrative burden of formal challenges.

§ 8.19 Procedures for submitting and processing requests for classification reviews.

(a) The Director of Security and Administrative Management is hereby designated as the official to whom a member of the public or another department or agency should submit a request for a classification review of classified information produced by or under the primary cognizance of the Department. Elements of the Department that receive a request directly will immediately notify the Director.

(b) If the request for classification review involves material produced by or under the cognizance of the U.S. Coast Guard or the Federal Aviation Administration, the Director will forward the request to the headquarters security staff of the element concerned for action. If the request involves material produced by other Departmental elements, the Director will serve as the office acting on the request.

(c) The office acting on the request will:

(1) Immediately acknowledge receipt of the request and provide a copy of the correspondence to the Director. If a fee for search of records is involved pursuant to 49 CFR Part 7, the requester will be so notified;

(2) Conduct a security review, which will include consultation with the office that produced the material and with source authorities when the classification, or exemption of material from automatic declassification, was based upon determinations by an original classifying authority; and

(3) Assure that the requester is notified of the determination within 30 calendar days or given an explanation as to why further time is necessary, and provide a copy of the notification to the Director.

(d) If the determination reached is that continued classification is required, the notification to the requester will include, whenever possible, a brief statement as to why the requested material cannot be declassified. The notification will also advise the requester of the right to appeal the determination to the Departmental Information Security Review Committee. A requester who wishes to appeal a classification review decision, or who has not been notified of a decision after 60 calendar days, may submit an appeal to the Departmental Information Security Review Committee.

(e) If the determination reached is that continued classification is not required, the information will be declassified and the material remarked accordingly. The office acting on the request will then refer the request to the office originating the material or higher authority to determine if it is otherwise withholdable from public release under the Freedom of Information Act (5 U.S.C. 552) and the Department's implementing regulations (49 CFR Part 7).

(1) If the material is available under the Freedom of Information Act, the requester will be advised that the material has been declassified and is available. If the request involves the furnishing of copies and a fee is to be collected, the requester will be so advised pursuant to 49 CFR Part 7, Departmental regulations implementing the Freedom of Information Act.

(2) If the material is not available under the Freedom of Information Act, the requester will be advised that the material has been declassified but that the record is unavailable pursuant to the Freedom of Information Act, and that the provisions concerning procedures for reconsidering decisions not to disclose records, contained in 49 CFR Part 7, apply.

(f) Upon receipt of an appeal from a classification review determination based upon continued classification, the Departmental Information Security Review Committee will acknowledge receipt immediately and act on the matter within 30 calendar days. With respect to information originally classified by or under the primary cognizance of the Department, the Committee, acting for the Secretary, has authority to overrule previous determinations in whole or in part when, in its judgment, continued protection in the interest of national security is no longer required. When the classification of the material produced in the

Department is based upon a classification determination made by another department or agency, the Committee will immediately consult with its counterpart committee for that department or agency.

(1) If it is determined that the material produced in the Department requires continued classification, the requester will be so notified and advised of the right to appeal the decision to the Interagency Classification Review Committee.

(2) If it is determined that the material no longer requires classification, it will be declassified and remarked. The Committee will refer the request to the General Counsel, or to the head of the Departmental agency concerned, as the case may be, to determine if the material is otherwise withholdable from the public under the Freedom of Information Act (5 U.S.C. 552) and Departmental regulations, (49 CFR Part 7), and paragraphs (f)(1) and (2) of this section will be followed. A copy of the response to the requester will be provided to the Committee.

(g) Requests for a classification review of material more than 25 years old will be referred directly to the Archivist of the United States and the requester will be notified of the referral. In this event, the provisions of this section apply.

(h) Whenever a request is insufficient in the description of the record sought, the requester will be asked to limit his request to records that are reasonably obtainable. If, in spite of these steps, the requester does not describe the records with sufficient particularity, or the record requested cannot be obtained with a reasonable amount of effort, the requester will be notified of the reasons why the request is denied and of his/her right to appeal the determination to the Departmental Information Security Review Committee.

§ 8.21 Burden of proof.

For the purpose of determinations to be made under §§ 8.13, 8.15, and 8.17, the burden of proof is on the originating Departmental agency to show that continued classification is warranted.

§ 8.23 Classified information transferred to the Department of Transportation.

(a) Classified information officially transferred to the Department in conjunction with a transfer of function, and not merely for storage purposes, will be considered to have been originated by the Department.

(b) Classified information in the custody of the Department originated by a department or agency that has ceased to exist and for whom there is no successor agency will be deemed to have been originated by the Department. This information may be declassified or downgraded by the Department after consultation with any other agency that has an interest in the subject matter of the information. Such agency will be allowed 30 calendar days in which to express an objection, if it so desires, before action is taken. A difference of opinion that cannot be resolved will be referred to the Departmental Information Security Review Committee, which will consult with its counterpart committee for the other agency.

(c) Classified information transferred to the National Archives and Records Administration (NARA) will be declassified or downgraded by the Archivist of the United States in accordance with Executive Order 12958, Departmental classification guides, and any existing procedural agreement between NARA and the Department. The Department will take all reasonable steps to declassify information contained in records determined to have permanent historical value before they are accessioned in NARA.

(d) To the extent practicable, the Department will adopt a system of records management that will facilitate the public release of documents at the time such documents are declassified under the provisions of this part for automatic declassification. To the maximum extent possible without destroying the integrity of the Department's files, all such material will be segregated or set aside for public release upon request. The Department will cooperate with the Archivist in efforts to establish a Government-wide database of information that has been declassified.

Subpart C—Access to Information

§ 8.25 Personnel Security Review Board.

(a) There is hereby established a Department of Transportation Personnel Security Review Board, which will, on behalf of the Secretary of Transportation (except in any case in which the Secretary personally makes the decision), make the administratively final decision on an appeal arising in any part of the Department from:

(1) A decision not to grant access to classified information;

(2) A decision to revoke access to classified information; or

(3) A decision under § 8.29 to deny access to classified information.

(b) The Personnel Security Review Board will be composed of:

(1) Two persons appointed by the Assistant Secretary for Administration: one from the Office of Personnel and Training, and one, familiar with personnel security adjudication, from the Office of Security and Administrative Management, who will serve as Chair;

(2) One person appointed by the General Counsel, who, in addition to serving as a member of the Board, will provide to the Board whatever legal services it may require; and

(3) One person appointed by each of the Commandant of the Coast Guard and the Federal Aviation Administrator.

(4) Any member may designate a representative, meeting the same criteria as the member, with full power to serve in his/her place.

(c) In carrying out its responsibilities to review final decisions to revoke or deny access to classified information, the Board will establish whatever procedures it deems fit.

§ 8.27 Public availability of declassified information.

(a) It is a fundamental policy of the Department to make information available to the public to the maximum extent permitted by law. Information that is declassified for any reason loses its status as material protected in the interest of national security. Accordingly, declassified information will be handled in every respect on the same basis as all other unclassified information. Declassified information is subject to the Departmental public information policies and procedures, with particular reference to the Freedom of Information Act (5 U.S.C. 552) and implementing Departmental regulations (49 CFR Part 7).

(b) In furtherance of this policy, all classified material produced after June 1, 1972 that is of sufficient historical or other value to warrant preservation as permanent records in accordance with appropriate records administrative standards, and that becomes declassified, will be systematically reviewed prior to the end of each calendar year for the purpose of making the material publicly available. To the maximum extent possible without destroying the integrity of the Department's files, all such material will be segregated or set aside for public release upon request.

§ 8.29 Access by historical researchers and former Presidential appointees.

(a) *Historical researchers.* (1) Persons outside the executive branch who are engaged in historical research projects may have access to classified information provided that:

(i) Access to the information is clearly consistent with the interests of national security; and

(ii) The person to be granted access is trustworthy.

(2) The provisions of this paragraph apply only to persons who are conducting historical research as private individuals or under private sponsorship and do not apply to research conducted under Government contract or sponsorship. The provisions are applicable only to situations where the classified information concerned, or any part of it, was originated by the Department or its contractors, or where the information, if originated elsewhere, is in the sole custody of the Department. Any person requesting access to material originated in another agency or to information under the exclusive jurisdiction of the National Archives and Records Administration (NARA) will be referred to the other agency or to NARA, as appropriate.

(3) When a request for access to classified information for historical research is received, it will be referred to the appropriate local security office.

That office will obtain from the applicant completed Standard Form 86, Questionnaire for National Security Positions, in triplicate, and Standard Form 87, Fingerprint Chart; a statement in detail to justify access, including identification of the kind of information desired and the organization or organizations, if any, sponsoring the research; and a written statement (signed, dated, and witnessed) with respect to the following:

(i) That the applicant will abide by regulations of the Department:

(A) To safeguard classified information; and

(B) To protect information that has been determined to be proprietary or privileged and is therefore not eligible for public dissemination.

(ii) That the applicant understands that any classified information that the applicant receives affects the security of the United States.

(iii) That the applicant acknowledges an obligation to safeguard classified information or privileged information of which the applicant gains possession or knowledge as a result of the applicant's access to files of the Department.

(iv) That the applicant agrees not to reveal to any person or agency any classified information or privileged information obtained as a result of the applicant's access except as specifically authorized in writing by the Department, and further agrees that the applicant shall not use the information for purposes other than those set forth in the applicant's application.

(v) That the applicant agrees to authorize a review of the applicant's notes and manuscript for the sole purpose of determining that no classified information or material is contained therein.

(vi) That the applicant understands that failure to abide by conditions of this statement will constitute sufficient cause for canceling the applicant's access to classified information and for denying the applicant any future access, and may subject the applicant to criminal provisions of Federal law as referred to in this statement.

(vii) That the applicant is aware and fully understands that title 18, United States Code, Crimes and Criminal Procedures, and the Internal Security Act of 1950, as amended, title 50, United States Code, prescribe, under certain circumstances, criminal penalties for the unauthorized disclosure of information respecting the national security, and for loss, destruction, or compromise of such information.

(viii) That this statement is made to the U.S. Government to enable it to exercise its responsibilities for the protection of information affecting the national security.

(ix) That the applicant understands that any material false statement that the applicant makes knowingly and willfully will subject the applicant to the penalties of 18 U.S.C. 1001.

(4) The security office will process the forms in the same manner as specified for a preappointment national agency check for a critical-sensitive position. Upon receipt of the completed national agency check, the security office, if warranted, may determine that access by the applicant to the information will be clearly consistent with the interests of national security and the person to be granted access is trustworthy. If deemed necessary, before making its determination, the office may conduct or request further investigation. Before access is denied in any case, the matter will be referred through channels to the Director of Security and Administrative Management for review and submission to the Personnel Security Review Board for final review.

(5) If access to TOP SECRET or intelligence or communications security information is involved a special background investigation is required. However, this investigation will not be requested until the matter has been referred through channels to the Director of Security and Administrative Management for determination as to adequacy of the justification and the consent of other agencies as required.

(6) When it is indicated that an applicant's research may extend to material originating in the records of another agency, approval must be obtained from the other agency prior to the grant of access.

(7) Approvals for access will be valid for the duration of the current research project but no longer than 2 years from the date of issuance, unless renewed. If

a subsequent request for similar access is made by the individual within one year from the date of completion of the current project, access may again be granted without obtaining a new National Agency Check. If more than one year has elapsed, a new National Agency Check must be obtained. The local security office will promptly advise its headquarters security staff of all approvals of access granted under the provisions of this section.

(8) An applicant may be given access only to that classified information that is directly pertinent to the applicant's approved project. The applicant may review files or records containing classified information only in offices under the control of the Department. Procedures must be established to identify classified material to which the applicant is given access. The applicant must be briefed on local procedures established to prevent unauthorized access to the classified material while in the applicant's custody, for the return of the material for secure storage at the end of the daily working period, and for the control of the applicant's notes until they have been reviewed. In addition to the security review of the applicant's manuscript, the manuscript must be reviewed by appropriate offices to assure that it is technically accurate insofar as material obtained from the Department is concerned, and is consistent with the Department's public release policies.

(b) *Former Presidential appointees.* Persons who previously occupied policymaking positions to which they were appointed by the President may be granted access to classified information or material that they originated, reviewed, signed, or received, while in public office, provided that:

(1) It is determined that such access is clearly consistent with the interests of national security; and

(2) The person agrees to safeguard the information, to authorize a review of the person's notes to assure that classified information is not contained therein, and that the classified information will not be further disseminated or published.

§ 8.31 Industrial security.

(a) *Background.* The National Industrial Security Program was established by Executive Order 12829 of January 6, 1993 for the protection of information classified pursuant to Executive Order 12356 of April 2, 1982, National Security Information, or its predecessor or successor orders, and the Atomic Energy Act of 1954, as amended. The Secretary of Defense serves as the Executive Agent for inspecting and monitoring contractors, licensees, grantees, and certificate holders that require or will require access to, or that store or will store, classified information, and for determining the eligibility for access to classified information of contractors, licensees, certificate holders, and grantees, and their respective employees.

(b) *Implementing regulations.* The Secretary of Transportation has entered into agreement for the Secretary of Defense to render industrial security services for the Department of Transportation. Regulations prescribed by the Secretary of Defense to fulfill the provisions of Executive Order 12829 have been extended to protect release of classified information for which the Secretary of Transportation is responsible. Specifically, this regulation is DOD 5220.22–M, National Industrial Security Program Operating Manual. This regulation is effective within the Department of Transportation, which functions as a User Agency as prescribed in the regulation. Appropriate security staffs, project personnel, and contracting officers assure that actions required by the regulation are taken.

PART 9—TESTIMONY OF EMPLOYEES OF THE DEPARTMENT AND PRODUCTION OF RECORDS IN LEGAL PROCEEDINGS

Sec.

9.1 Purpose.
9.2 Applicability.
9.3 Definitions.
9.5 General prohibition of production or disclosure in legal proceedings.
9.7 Testimony by employees before the Department or in other legal proceedings in which the United States is a party.
9.9 Legal proceedings between private litigants: General rules.

9.11 Legal proceedings between private litigants: Demands.
9.13 Legal proceedings between private litigants: Procedures to request records.
9.15 Legal proceedings between private litigants: Procedures to request testimony.
9.17 Legal proceedings between private litigants: Procedures for taking testimony.
9.19 Acceptance of service on behalf of Secretary.

AUTHORITY: 5 U.S.C. 301; 45 U.S.C. 41–42; 49 U.S.C. 322; 49 U.S.C. 504(f); 23 U.S.C. 409.

SOURCE: 58 FR 6724, Feb. 2, 1993, unless otherwise noted.

§ 9.1 Purpose.

(a) This part sets forth procedures governing the testimony of an employee in legal proceedings in which the United States is a party. It also sets forth procedures to be followed when an employee is issued a subpoena, order or other demand (collectively referred to in this part as a ''demand'') by a court or other competent authority, or is requested by a private litigant, to provide testimony or produce records concerning information acquired in the course of performing official duties or because of the employee's official status. It also prescribes the policies and procedures of the Department with respect to the acceptance of service of legal process and pleadings in legal proceedings involving the Department.

(b) The purposes of this part are to:

(1) Conserve the time of employees for conducting official business;

(2) Minimize the possibility of involving the Department in controversial issues not related to its mission;

(3) Maintain the impartiality of the Department among private litigants;

(4) Avoid spending the time and money of the United States for private purposes; and

(5) To protect confidential, sensitive information and the deliberative processes of the Department.

(c) Agency counsel, in his or her discretion, may permit an exception from any requirement in this part. The exception may be granted only when the deviation will not interfere with matters of operational or military necessity, and when agency counsel determines that:

(1) It is necessary to prevent a miscarriage of justice;

(2) The Department has an interest in the decision that may be rendered in the legal proceeding; or

(3) The exception is in the best interest of the Department or the United States.

For Office of Inspector General employees and documents, the Inspector General, in conjunction with the General Counsel of the Department, may permit an exception from any requirement of this part if the Inspector General determines, based on the Inspector General Act of 1978, as amended, that application of the requirement would be inappropriate.

§ 9.2 Applicability.

This part applies to the testimony of an employee in legal proceedings in which the United States is a party. It also applies in legal proceedings between private litigants to requests or demands for testimony or records concerning information acquired in the course of an employee performing official duties or because of the employee's official status. This part does not apply to any legal proceeding in which an employee is to testify as to facts or events that are in no way related to the employee's official duties or the functions of the Department. Nor does it apply to Congressional demands for testimony or documents.

§ 9.3 Definitions.

For purposes of this part:

Department means the Department of Transportation (DOT), including the Office of the Secretary (which encompasses the Office of the Inspector General) and the following operating administrations while they are part of DOT:

(a) The U.S. Coast Guard.

(b) The Federal Aviation Administration.

(c) The Federal Highway Administration.

(d) The Federal Railroad Administration.

(e) The Federal Transit Administration.

(f) The St. Lawrence Seaway Development Corporation.

(g) The National Highway Traffic Safety Administration.

(h) The Maritime Administration.

(i) The Research and Special Programs Administration.

(j) Any DOT operating administration established after the effective date of this part.

Legal proceeding means any case or controversy pending before any federal, state, or local court (including grand jury proceedings), any administrative proceeding pending before any federal, state, or local agency, or any legislative proceeding pending before any state or local agency.

Legal proceeding between private litigants means any legal proceeding in which neither the Department of Transportation nor the United States (including any federal agency or officer of the United States in his or her official capacity) is a party.

Employee of the Department or *Employee* means any current or former officer or employee of the Department; any active duty, retired, or former officer or enlisted member of the Coast Guard; or any current or former contractor (including any corporation or other entity and any employee or subcontractor).

Agency counsel means the General Counsel of the Department or the Chief Counsel of any operating administration of the Department concerned, any person to whom the General Counsel or Chief Counsel has delegated authority, or any person who is authorized to represent the Department in a specific legal proceeding.

Testimony means any written or oral statement by a witness, including depositions, answers to interrogatories, affidavits, declarations, and statements at a hearing or trial.

§ 9.5 General prohibition of production or disclosure in legal proceedings.

No employee of the Department may provide testimony or produce any material contained in the files of the Department, or disclose any information relating to, or based upon, material contained in the files of the Department, or disclose any information or produce any material acquired as part of the performance of that employee's official duties or because of that employee's official status unless authorized in accordance with this part, or by other applicable law.

§ 9.7 Testimony by employees before the Department or in other legal proceedings in which the United States is a party.

In any legal proceeding before the Department or in which the United States (including any federal agency or officer of the United States) is a party:

(a) Agency counsel shall arrange for an employee to testify as a witness for the United States whenever the attorney representing the United States requests it.

(b) An employee may testify for the United States both as to facts within the employee's personal knowledge and as an expert or opinion witness. Except as provided in paragraph (c) of this section, an employee may not testify as an expert or opinion witness, with regard to any matter arising out of the employee's official duties or the functions of the Department, for any party other than the United States in any legal proceeding in which the United States is a party. An employee who receives a demand to testify on behalf of a party other than the United States may testify as to facts within the employee's personal knowledge, provided that the testimony be subject to the prior approval of agency counsel and to the Federal Rules of Civil Procedure and any applicable claims of privilege.

(c) An employee may testify as an expert or opinion witness on behalf of an officer or enlisted member of the Coast Guard in any legal proceeding conducted by the Coast Guard.

§ 9.9 Legal proceedings between private litigants: General rules.

In legal proceedings between private litigants:

(a) The proper method for obtaining testimony or records from an employee is to submit a request to agency counsel as provided in §§ 9.13 and 9.15 of this part, not to serve a demand on the employee. Whenever, in a legal proceeding between private litigants, an employee is served with a demand, or receives a request, to testify in that employee's official capacity or produce records, the employee shall immediately notify agency counsel.

(b) If authorized to testify pursuant to these rules, an employee may testify only as to facts within that employee's

personal knowledge with regard to matters arising out of his or her official duties.

(1) When the proceeding arises from an accident, an employee may testify only as to personally known facts, not reasonably available from other sources, observed by the employee or uncovered during the employee's investigation of the accident or observed by the employee even if he or she did not investigate the accident. The employee shall decline to testify regarding facts beyond the scope of his or her official duties.

(2) The employee shall not testify to facts that are contained in a report, or any part of a report, unless the employee has obtained permission from agency counsel to disclose the information.

(3) The employee shall not disclose confidential or privileged information unless the employee has obtained permission from agency counsel to disclose the information.

(4) The employee shall not testify as to facts when agency counsel determines that the testimony would not be in the best interest of the Department or the United States if disclosed.

(c) An employee shall not testify as an expert or opinion witness with regard to any matter arising out of the employee's official duties or the functions of the Department. An employee who is asked questions that call for expert or opinion testimony shall decline to answer on the grounds that it is forbidden by this part. Agency counsel shall advise the employee on how to proceed if the presiding officer directs the employee to provide expert or opinion testimony.

(d) An employee shall not provide testimony at a trial or hearing. An employee's testimony shall be limited to a single deposition, affidavit, or set of interrogatories, concerning the circumstances (e.g. an accident) from which the proceeding arose. Where multiple legal proceedings concerning those circumstances are pending, or can occur, it shall be the duty of the private litigant seeking the testimony to ascertain, to the extent feasible, the identities of all parties, or potential parties, to those proceedings and notify them that a deposition has been granted and that they have the opportunity to participate. The private litigant shall submit an affidavit or certification describing the extent of the search for parties and potential parties and listing the names of the parties and potential parties notified.

(e) Where an employee has already provided testimony, any party wishing to obtain further testimony from that employee concerning the same matter or occurrence, whether in the same or a different private legal proceeding, may submit a request to agency counsel to waive the restrictions of paragraph (d) of this section. The request shall, in addition to meeting the requirements of §9.15 of this part, state why the requester should be permitted to gather additional information despite not having previously requested the information when it had an opportunity to do so, and why the additional testimony is now required and the prior testimony or previously supplied documents are insufficient.

§9.11 Legal proceedings between private litigants: Demands.

(a) If an employee receives a demand that has not been validly issued or served, agency counsel may instruct the employee not to comply with the demand.

(b) If an employee receives a demand (validly issued and served) to testify or produce records, agency counsel, in his or her discretion, may grant the employee permission to testify or produce records only if the purposes of this part are met or agency counsel determines that an exception is appropriate.

(c) If a demand is issued to an employee, agency counsel shall contact the requester of the demand, inform that person of the requirements of this part, and may, in agency counsel's discretion, ask that the demand be withdrawn.

(d) If the requester of the demand refuses to have it withdrawn or fails to comply with this part, the Department may seek to quash the demand.

(e) If the court or other competent authority declines to grant the Department's motion to quash, agency counsel shall instruct the employee whether to testify or produce documents pursuant to the demand. Agency counsel

may permit the testimony under §9.1(c) of this part. If response to a demand is required before the court or other competent authority rules on the motion to quash and the court fails to stay the demand, the employee must appear at the stated time and place, produce a copy of this part, and respectfully refuse to provide any testimony or produce any documents. Agency counsel shall take steps to arrange for legal representation for the employee. Agency counsel shall advise the employee how to respond, including not to testify, if the court or other competent authority rules that the demand must be complied with irrespective of these regulations.

§9.13 Legal proceedings between private litigants: Procedures to request records.

(a) In a legal proceeding between private litigants, a party who wishes to obtain records from the Department shall submit to agency counsel a request for the records. The request will ordinarily be handled in accordance with the Department's procedures concerning requests for records found at 49 CFR part 7. If the party does not follow the procedures specified in that part, the request must be accompanied by a statement setting forth the relevance of the records to the proceeding. The request should be resolved before any request for testimony under §9.15 is submitted. Where a request for testimony includes a request for additional records, it shall indicate precisely how this new request differs in scope from any previous request in order to avoid agency duplication of effort. Agency counsel shall notify the requester of the approval or denial of the request.

(b) [Reserved]

§9.15 Legal proceedings between private litigants: Procedures to request testimony.

(a) Any party seeking the testimony of an employee in a legal proceeding between private litigants, concerning facts within the employee's personal knowledge with regard to matters arising out of the employee's official duties, shall, rather than serving a demand for the testimony, request the testimony at least 30 days before it is intended to be taken or received. The request must be submitted to agency counsel and must include:

(1) The title of the case, docket number, and the court, or otherwise clearly identify the legal proceeding involved;

(2) A statement setting forth the basic facts in the proceeding, such as the type, date, and location of an accident;

(3) A summary of the unresolved issues applicable to the testimony sought;

(4) A summary of the testimony sought and its relevant to the proceeding;

(5) A certification with support, that the information desired is not reasonably available from other sources, including Departmental documents;

(6) Pursuant to §9.9(d) of this part, an affidavit or certification describing the extent of a search of parties and potential parties and listing the names of the parties and potential parties notified; and

(7) A declaration that the party will not seek expert or opinion testimony from the witness or seek the testimony of the witness at a hearing or trial in the proceeding.

The request shall specify which form of testimony (deposition, affidavit, declaration, or answers to interrogatories) is desired and the date by which it is desired; however, only one form, the one least burdensome to the Department that will provide the needed information, will be permitted for each witness.

(b) The party seeking the testimony shall include with its request for testimony a copy of any prior request(s) made by the same requester to the Department or other agency of the United States for records pertaining to the matter being litigated and of the response (not including the records themselves) to the request(s). The party seeking the testimony shall also comply with any agency counsel request that copies of the records previously disclosed by the Department, or a list of those records, be furnished.

(c) In accordance with the requirement of this section and the general provisions of this part, agency counsel shall notify the requester of the approval or denial of the request. Agency

counsel may attach special conditions to its approval.

§ 9.17 Legal proceedings between private litigants: Procedures for taking testimony.

(a) Testimony of an employee of the Department may be taken only at the office to which the employee is assigned, or any other place designated by agency counsel. Additional conditions may be specified under § 9.15(c) of this part. The time shall be reasonably fixed to avoid substantial interference with the performance of the employee's or agency counsel's official duties.

(b) Upon completion of the testimony of an employee of the Department, a copy of the transcript of the testimony shall be furnished, at the expense of the party requesting the testimony, to agency counsel for the Department's files.

§ 9.19 Acceptance of service on behalf of Secretary.

In any legal proceeding, at the option of the server, process or pleadings may be served on agency counsel, with the same effect as if served upon the Secretary or the head of the operating administration concerned, as the case may be. The official accepting service under this section shall acknowledge the service and take appropriate action. This section does not in any way abrogate or modify the requirements of Rule 4(d)(4) and 4(d)(5) of the Federal Rules of Civil Procedure regarding service of summons and complaint.

PART 10—MAINTENANCE OF AND ACCESS TO RECORDS PERTAINING TO INDIVIDUALS

Subpart A—Applicability and Policy

Sec.
10.1 Applicability.
10.3 Policy.
10.5 Definitions.

Subpart B—General

10.11 Administration of part.
10.13 Privacy Officer.
10.15 Protection of records.

Subpart C—Maintenance of Records

10.21 General.
10.23 Accounting of disclosures.
10.25 Mailing lists.
10.27 Government contractors.
10.29 Social Security numbers.

Subpart D—Availability of Records

10.31 Requests for records.
10.33 Acknowledgment and access.
10.35 Conditions of disclosure.
10.37 Identification of individual making request.
10.39 Location of records.

Subpart E—Correction of Records

10.41 Requests for correction of records.
10.43 Time limits.
10.45 Statement of disagreement.

Subpart F—Procedures for Reconsidering Decisions Not To Grant Access to or Amend Records

10.51 General.

Subpart G—Exemptions

10.61 General exemptions.
10.63 Specific exemptions.

Subpart H—Fees

10.71 General.
10.73 Payment of fees.
10.75 Fee schedule.
10.77 Services performed without charge.

Subpart I—Criminal Penalties

10.81 Improper disclosure.
10.83 Improper maintenance of records.
10.85 Wrongfully obtaining records.

APPENDIX TO PART 10—EXEMPTIONS

AUTHORITY: 5 U.S.C. 552a; 49 U.S.C. 322.

SOURCE: 45 FR 8993, Feb. 11, 1980, unless otherwise noted.

Subpart A—Applicability and Policy

§ 10.1 Applicability.

This part implements section 552a of title 5, United States Code, as well as other provisions of the Privacy Act of 1974, and prescribes rules governing the availability of those records of the Department of Transportation which relate to citizens of the United States and aliens lawfully admitted for permanent residence.

[45 FR 8993, Feb. 11, 1980, as amended at 62 FR 23666, May 1, 1997]

§ 10.3 Policy.

It is the policy of the Department of Transportation to comply with the letter and the spirit of the Privacy Act (the Act). Therefore, personal data contained in each system of records is afforded adequate protection against unauthorized access, is as accurate as is feasible, and is limited to that necessary to accomplish the stated use or uses of the system. Further, no system of records is exempted from the requirements of the Act unless it is determined that to do so is in the best interest of the government with due concern for individual rights.

§ 10.5 Definitions.

Unless the context requires otherwise, the following definitions apply in this part:

Administrator means the head of an operating administration and includes the Under Secretary for Security and the Commandant of the Coast Guard.

Department means the Department of Transportation, including the Office of the Secretary, the Office of Inspector General, and the following operating administrations: This definition specifically excludes the Surface Transportation Board, which has its own Privacy Act regulations (49 CFR Part 1007), except to the extent that any system of records notice provides otherwise.

(1) Federal Aviation Administration.

(2) Federal Highway Administration.

(3) Federal Motor Carrier Safety Administration.

(4) Federal Railroad Administration.

(5) Federal Transit Administration.

(6) National Highway Traffic Safety Administration.

(7) St. Lawrence Seaway Development Corporation.

(8) Pipeline and Hazardous Materials Safety Administration.

(9) Research and Innovative Technology Administration.

(10) Maritime Administration.

General Counsel means the General Counsel of the Department.

Includes means ''includes but is not limited to;''

Individual means a citizen of the United States or an alien lawfully admitted;

Maintain includes maintain, collect, use, or disseminate;

May is used in a permissive sense to state authority or permission to do the act prescribed;

Record means any item, collection, or grouping of information about an individual that is maintained by the Department including, but not limited to, education, financial transactions, medical history, and criminal or employment history and that contains the name of, or an identifying number, symbol, or other identifying particular assigned to, the individual, such as a finger or voice print or a photograph;

Secretary means the Secretary of Transportation or any person to whom has been delegated authority in the matter concerned;

System of records means a group of any records under the control of the Department from which information is retrieved by the name of the individual or by some identifying number, symbol, or other identifying particular assigned to the individual;

Statistical record means a record in a system of records maintained for statistical research or reporting purposes only and not in whole or in part in making any determination about an identifiable individual, except as provided by section 8 of title 13, United States Code; and

Routine use means, with respect to the disclosure of a record, the use of such record for a purpose which is compatible with the purpose for which it was collected.

[45 FR 8993, Feb. 11, 1980, as amended at 62 FR 23667, May 1, 1997; 65 FR 48184, Aug. 7, 2000; 67 FR 54746, Aug. 26, 2002; 73 FR 33329, June 12, 2008]

Subpart B—General

§ 10.11 Administration of part.

Authority to administer this part in connection with the records of the Office of the Secretary is delegated to the Chief Information Officer. Authority to administer this part in connection with records in each operating administration is delegated to the Administrator concerned. An Administrator may redelegate to officers of that administration the authority to administer this

part in connection with defined systems of records. An Administrator, however, may redelegate his or her duties under subparts F and G of this part only to his or her deputy and to not more than one other officer who reports directly to the Administrator and who is located at the headquarters of that administration or at the same location as the majority of that administration's systems of records.

[45 FR 8993, Feb. 11, 1980, as amended at 62 FR 23667, May 1, 1997; 73 FR 33329, June 12, 2008]

§ 10.13 Privacy Officer.

(a) To assist with implementation, evaluation, and administration issues, the Chief Information Officer appoints a principal coordinating official with the title Privacy Officer, and one Privacy Act Coordinator from his/her staff.

(b) Inquiries concerning Privacy Act matters, or requests for assistance, may be addressed to the Privacy Act Officer (S–80), Department of Transportation, 1200 New Jersey Avenue, SE., Washington, DC 20590.

(c) Administrators may designate Privacy Officers or Coordinators to act as central coordinators within their administrations to assist them in administering the Act.

[73 FR 33329, June 12, 2008]

§ 10.15 Protection of records.

(a) No person may, without permission, remove any record made available for inspection or copying under this part from the place where it is made available. In addition, no person may steal, alter, mutilate, obliterate, or destroy, in whole or in part, such a record.

(b) Section 641 of title 18 of the United States Code provides, in pertinent part, as follows:

> Whoever * * * steals, purloins, or knowingly converts to his use or the use of another, or without authority, sells, conveys or disposes of any record * * * or thing of value of the United States or of any department or agency thereof * * * shall be fined not more than $10,000 or imprisoned not more than 10 years or both; but if the value of such property does not exceed the sum of $100, he shall be fined not more than $1,000 or imprisoned not more than one year or both * * *.

(c) Section 2071 of title 18 of the United States Code provides, in pertinent part, as follows:

> Whoever willfully and unlawfully conceals, removes, mutilates, obliterates, or destroys, or attempts to do so, or with intent to do so takes and carries away any record, proceeding, map, book, paper, document, or other thing, filed or deposited * * * in any public office, or with any * * * public officer of the United States, shall be fined not more than $2,000 or imprisoned not more than 3 years, or both.

Subpart C—Maintenance of Records

§ 10.21 General.

Except to the extent that a system of records is exempt in accordance with subpart G of this part, the Department, with respect to each system of records:

(a) Maintains in its records only such information about an individual as is relevant and necessary to accomplish a purpose of the Department required to be accomplished by statute or by executive order of the President;

(b) Collects information to the greatest extent practicable directly from the subject individual when the information may result in adverse determinations about an individual's rights, benefits, or privileges under Federal programs;

(c) Informs each individual whom it asks to supply information, on the form which it uses to collect the information or on a separate form that can be retained by the individual of:

(1) The authority (whether granted by statute, or by executive order of the President) which authorizes the solicitation of the information and whether disclosure of such information is mandatory or voluntary;

(2) The principal purpose or purposes for which the information is intended to be used;

(3) The routine uses, as published pursuant to paragraph (d)(4) of this section, which may be made of the information; and

(4) The effects, if any, on the individual of not providing all or any part of the requested information;

(d) Publishes in the FEDERAL REGISTER at least annually a notice of the

existence and character of the system of records, including:

(1) The name and location of the system;

(2) The categories of individuals on whom records are maintained in the system;

(3) The categories of records maintained in the system;

(4) Each routine use of the records contained in the system, including the categories of users and the purpose of such use;

(5) The policies and practices regarding storage, retrievability, access controls, retention, and disposal of the records;

(6) The title and business address of the official responsible for the system of records;

(7) The procedures whereby an individual can be notified upon request if the system of records contains a record pertaining to that individual;

(8) The procedures whereby an individual can be notified upon request how to gain access to any record pertaining to that individual contained in the system of records, and how to contest its content; and

(9) The categories of sources of records in the system;

(e) Maintains all records which are used in making any determination about any individual with such accuracy, relevancy, timeliness, and completeness as is reasonably necessary to assure fairness to the individual in the determination;

(f) Prior to disseminating any record about an individual to any person other than an agency, unless the dissemination is made pursuant to §10.35(a)(2), makes reasonable efforts to assure that such records are accurate, complete, timely, and relevant for the Department's purposes;

(g) Maintains no record describing how any individual exercises rights guaranteed by the First Amendment unless:

(1) Expressly authorized by the General Counsel; and

(2) Expressly authorized by statute or by the individual about whom the record is maintained or unless pertinent to and within the scope of an authorized law enforcement activity;

(h) Makes reasonable efforts to serve notice on an individual when any record on such individual is made available to any person under compulsory legal process when such process becomes a matter of public record.

§10.23 Accounting of disclosures.

Each operating administration, the Office of Inspector General, and the Office of the Secretary, with respect to each system of records under its control:

(a) Except for disclosures made under §10.35(a) (1) or (2) of this part, keep an accurate accounting of:

(1) The date, nature, and purpose of each disclosure of a record to any person or to another agency made under §10.33; and

(2) The name and address of the person or agency to whom the disclosure is made;

(b) Retains the accounting made under paragraph (a) of this section for at least five years or the life of the record, whichever is longer, after the disclosure for which the accounting is made;

(c) Except for disclosures made under §10.33(a)(7) of this part, makes the accounting made under paragraph (a)(1) of this section available to the individual named in the record at his request; and

(d) Informs any person or other agency about any correction or notation of dispute made by the agency in accordance with §10.45 of any record that has been disclosed to the person or agency if an accounting of the disclosure was made.

[45 FR 8993, Feb. 11, 1980, as amended at 62 FR 23667, May 1, 1997]

§10.25 Mailing lists.

An individual's name and address is not sold or rented unless such action is specifically authorized by law. This provision shall not be construed to require the withholding of names and addresses otherwise permitted to be made public.

§10.27 Government contractors.

When the Department provides by a contract for the operation by or on behalf of the Department of a system of records to accomplish a function of the

Department, the requirements of this part are applied to such system. For purposes of subpart I, Criminal Penalties, any such contractor and any employee of the contractor are considered, in accordance with section 3(m) of the Privacy Act, to be employees of the Department.

§ 10.29 Social Security numbers.

(a) No individual is denied any right, benefit, or privilege provided by law because of such individual's refusal to disclose his Social Security account number.

(b) The provisions of paragraph (a) of this section do not apply to:

(1) Any disclosure which is required by Federal statute; or

(2) The disclosure of a Social Security number when such disclosure was required under statute or regulation adopted prior to January 1, 1975, to verify the identity of an individual.

(c) When an individual is requested to disclose his or her Social Security account number, that individual is informed whether that disclosure is mandatory or voluntary, by what statutory or other authority such number is solicited, what uses are made of it, and what detriments, including delay in the location of records, are incurred if the number is not provided.

Subpart D—Availability of Records

§ 10.31 Requests for records.

(a) Ordinarily, each person desiring to determine whether a record pertaining to him/her is contained in a system of records covered by this part or desiring access to a record covered by this part, or to obtain a copy of such a record, shall make a request in writing addressed to the system manager. The ''Privacy Act Issuances'' published by the Office of the Federal Register, National Archives and Records Administration, describes the systems of records maintained by all Federal agencies, including the Department and its components. In exceptional cases oral requests are accepted. A description of DOT Privacy Act systems notices is available through the Internet free of charge at *http://www.access.gpo.gov/su_docs/aces/PrivacyAct.shtml?desc015.html*. See §10.13(b) regarding inquiries concerning Privacy Act matters or requests for assistance.

(b) Each request shall specify the name of the requesting individual and the system of records in which the subject record is located or thought to be located. If assistance is required to determine the system of records identification number assigned in the systems notices, such assistance may be obtained from the appropriate Privacy Act officer or his assistant. Refer to §10.13 for procedures for requesting assistance.

[45 FR 8993, Feb. 11, 1980, as amended at 62 FR 23667, May 1, 1997]

§ 10.33 Acknowledgment and access.

(a) Requests by an individual to determine whether he or she is the subject of a record in a system of records, or requesting access to a record in a system of records, should be acknowledged within 10 working days, where the request is by mail. For requests in person, an immediate response is given, either granting access or informing such individual when notification or access may be expected.

(b) If the response granting access or copies of the record is made within 10 working days, separate acknowledgment is not required.

(c) Although requests for access to a record are normally in writing, *e.g.*, by filing a written form or letter, it is the option of the individual to mail or present the request form in person.

§ 10.35 Conditions of disclosure.

(a) No record that is contained within a system of records of the Department is disclosed by any means of communication to any person, or to another agency, except pursuant to a written request by, or with the prior written consent of, the individual to whom the record pertains, unless disclosure of the record would be:

(1) To those officers and employees of the Department who have a need for the record in the performance of their duties;

(2) Required under part 7 of this title which implements the Freedom of Information Act;

(3) For a routine use as defined in §10.5 and described pursuant to §10.21(d)(4);

(4) To the Bureau of the Census for purposes of planning or carrying out a census or survey or related activity pursuant to the provisions of title 13, United States Code;

(5) To a recipient who has provided the Department with advance adequate written assurance that the record will be used solely as a statistical research or reporting record, and the record is to be transferred in a form that is not individually identifiable;

(6) To the National Archives of the United States as a record which has sufficient historical or other value to warrant its continued preservation by the U.S. Government, or for evaluation by the Administrator of General Services or his designee to determine whether the record has such value;

(7) To another agency or to an instrumentality of any governmental jurisdiction within or under the control of the United States for a civil or criminal law enforcement activity if the activity is authorized by law, and if the head of the agency or instrumentality has made a written request to the agency which maintains the record specifying the particular portion desired and the law enforcement activity for which the record is sought;

(8) To a person pursuant to a showing of compelling circumstances affecting the health or safety of an individual if upon such disclosure notification is transmitted to the last known address of such individual;

(9) To either House of the Congress, or to the extent of matters within its jurisdiction, any committee or subcommittee thereof, any joint committee of the Congress or subcommittee of any such joint committee;

(10) To the Comptroller General, or any authorized representatives, in the course of the performance of the duties of the General Accounting Office; or

(11) Pursuant to the order of a court of competent jurisdiction.

(12) To a consumer reporting agency in accordance with 31 U.S.C. 3711(f).

(b) Any individual requesting access to his or her record or to any information pertaining to that individual which is contained within a system of records within the Department has access to that record or information unless the system of records within which the record or information is contained is exempted from disclosure in accordance with subpart G, provided, however, that nothing in this part is deemed to require that an individual be given access to any information compiled in reasonable anticipation of a civil action or proceeding. No exemption contained in subpart G of part 7 of the regulations of the Office of the Secretary is relied upon to withhold from an individual any record which is otherwise accessible to such individual under the provisions of this part. Any individual who is given access to a record or information pertaining to him is permitted to have a person of his or her own choosing accompany him and to have a copy made of all or any portion of the record or information in a form comprehensible to the individual. When deemed appropriate, the individual may be required to furnish a written statement authorizing discussion of his record in the accompanying person's presence.

(c) *Medical records.* Where requests are for access to medical records, including psychological records, the decision to release directly to the individual, or to withhold direct release, shall be made by a medical practitioner. Where the medical practitioner has ruled that direct release will do harm to the individual who is requesting access, normal release through the individual's chosen medical practitioner will be recommended. Final review and decision on appeals of disapprovals of direct release will rest with the General Counsel.

(d) Any person requesting access to records or to any information pertaining to other individuals is not granted such access unless that person can show that he or she has obtained permission for such access from the individual to whom the record pertains, unless the request comes within one of the exceptions of paragraph (a) of this section.

[45 FR 8993, Feb. 11, 1980, as amended at 62 FR 23667, May 1, 1997]

§ 10.37 Identification of individual making request.

No record or information contained in a system of records is disclosed to an individual nor is any correction of a record in accordance with subpart E made at the request of an individual unless that individual demonstrates that he or she is who he or she claims to be. Normally, identity can be proven for individuals who appear in person by the presentation of an identifying document issued by a recognized organization (*e.g.,* a driver's license or a credit card) and which contains a means of verification such as a photograph or a signature. For requests by mail, the unique identifier used in the system should be included if known. Responses to mail requests are normally sent only to the name and address listed in the system of records. In the case of particularly sensitive records, additional identification requirements may be imposed. In such cases, these additional requirements are listed in the public notice for the system.

[45 FR 8993, Feb. 11, 1980, as amended at 62 FR 23667, May 1, 1997]

§ 10.39 Location of records.

Each record made available under this subpart is available for inspection and copying during regular working hours at the place where it is located, or, upon reasonable notice, at the document inspection facilities of the Office of the Secretary or each administration. Original records may be copied but may not be released from custody. Upon payment of the appropriate fee, copies are mailed to the requester.

[62 FR 23667, May 1, 1997]

Subpart E—Correction of Records

§ 10.41 Requests for correction of records.

Any person who desires to have a record pertaining to that person corrected shall submit a written request detailing the correction and the reasons the record should be so corrected. Requests for correction of records shall be submitted to the System Manager.

[62 FR 23667, May 1, 1997]

§ 10.43 Time limits.

Within ten days (excluding Saturday, Sunday, and legal holidays) of the receipt in accordance with § 10.41 of a request by an individual to amend a record pertaining to him, the receipt of the request is acknowledged in writing. If a determination is made to correct the record as requested, the correction is promptly made. If a determination is made not to correct a record the individual is informed promptly of the right to appeal in accordance with subpart F. If an appeal of a refusal to correct a record is in accordance with subpart F, a determination whether to correct the record is made within thirty days (excluding Saturday, Sunday, and legal holidays) of the receipt of the appeal unless, for good cause shown the Administrator concerned, or in the case of the Office of the Secretary, the General Counsel, extends such period. Where an extension is taken, the party taking the appeal is promptly notified of such fact.

§ 10.45 Statement of disagreement.

If a determination is made not to amend a record, the requester is informed of the right to file a concise statement setting forth the reasons for disagreement with the refusal to amend. In any disclosure containing information about which an individual has filed such a statement of disagreement, the portions of the record which are disputed are noted clearly and copies of the statement of disagreement provided. If the Administrator concerned or his or her delegee, or in the case of the Office of the Secretary, the General Counsel or his or her delegee, deems it appropriate, copies of a concise statement of the reasons for not making the amendments requested may be provided along with the statement of disagreement.

Subpart F—Procedures for Reconsidering Decisions Not To Grant Access to or Amend Records

§ 10.51 General.

(a) Each officer or employee of the Department who, upon a request by a member of the public for a record

under this part, makes a determination that access is not to be granted or who determines not to amend a record in a requested manner, gives a written statement of the reasons for that determination to the person making the request and indicates the name and title or position of each person responsible for the denial of such request and the procedure for appeal within the Department.

(b) Any person:

(1) Who has been given a determination pursuant to paragraph (a) of this section, that access will not be granted; or

(2) Who has been informed that an amendment to a requested record will not be made; may apply to the Administrator concerned, or in the case of the Office of the Secretary, to the General Counsel for review of that decision. A determination that access will not be granted or a record amended is not administratively final for the purposes of judicial review unless it was made by the Administrator concerned or his or her delegee, or the General Counsel or his or her delegee, as the case may be. Upon a determination that an appeal will be denied, the requester is informed in writing of the reasons for the determination, and the names and titles or positions of each person responsible for the determination, and that the determination may be appealed to the District Court of the United States in the district in which the complainant resides, or has his or her principal place of business, or in which the records are located, or in the District of Columbia.

(c) Each application for review must be made in writing and must include all information and arguments relied upon by the person making the request, and be submitted within 30 days of the date of the initial denial; exceptions to this time period are permitted for good reason.

(d) Upon a determination that a request for the correction of a record will be denied, the requester is informed that he may file a concise statement in accordance with § 10.45.

(e) Each application for review must indicate that it is an appeal from a denial of a request made under the Privacy Act. The envelope in which the application is sent should be marked prominently with the words ''Privacy Act.'' If these requirements are not met, the time limits described in § 10.43 do not begin to run until the application has been identified by an employee of the Department as an application under the Privacy Act and has been received by the appropriate office.

(f) The Administrator concerned, or the General Counsel, as the case may be, may require the person making the request to furnish additional information, or proof of factual allegations, and may order other proceedings appropriate in the circumstances. The decision of the Administrator concerned, or the General Counsel, as the case may be, as to the availability of the record or whether to amend the record is administratively final.

(g) The decision by the Administrator concerned, or the General Counsel, as the case may be, not to disclose a record under this part is considered a determination for the purposes of section 552a(g) of title 5, United States Code, ''Civil Remedies.''

(h) Any final decision by an Administrator or his/her delegate not to grant access to or amend a record under this part is subject to concurrence by the General Counsel or his or her delegate.

[45 FR 8993, Feb. 11, 1980, as amended at 62 FR 23667, May 1, 1997]

Subpart G—Exemptions

§ 10.61 General exemptions.

(a) The Assistant Secretary for Administration, with regard to the Investigations Division; and the Federal Aviation Administrator, with regard to the FAA's Investigative Record System (DOT/FAA 815) may exempt from any part of the Act and this part except subsections (b), (c)(1) and (2), (e)(4)(A) through (F), (e)(6), (7), (9), (10), and (11), and (i) of the Act, and implementing §§ 10.35, 10.23(a) and (b), 10.21(d)(1) through (6), 10.81, 10.83, and 10.85 of this chapter, any systems of records, or portions thereof, which they maintain which consist wholly of;

(1) Information compiled for the purpose of identifying individual criminal offenders and alleged offenders and consisting only of identifying data and notations of arrests, the nature and

disposition of criminal charges, sentencing, confinement, release, and parole and probation status;

(2) Information compiled for the purpose of a criminal investigation, including reports of informants and investigators, and associated with an identifiable individual; or

(3) Reports identifiable to an individual compiled at any stage of the process of enforcement of the criminal laws from arrest or indictment through release from supervision.

(b) The requirements (including general notice) of sections 553(b)(1), (2) and (3), and (c) and (e) of title 5, United States Code, will be met by publication in appendix A to this part, which must, at a minimum, specify:

(1) The name of the system; and

(2) The specific provisions of the Act from which the system is to be exempted and the reasons therefor.

(c) Any decision to exempt a system of records under this section is subject to concurrence by the General Counsel.

(d) Any person may petition the Secretary in accordance with the provisions of part 5 of this title, to institute a rulemaking proceeding for the amendment or repeal of any exemptions established under this section.

[45 FR 8993, Feb. 11, 1980, as amended at 58 FR 67697, Dec. 22, 1993; 73 FR 33329, June 12, 2008]

§ 10.63 Specific exemptions.

The Secretary or his or her delegee, in the case of the Office of the Secretary; or the Administrator or his or delegee, in the case of an operating administration; or the Inspector General or his or her delegee, in the case of the Office of Inspector General, may exempt any system of records that is maintained by the Office of the Secretary, an operating administration, or the Office of Inspector General, as the case may be, from subsections (c)(3), (d), (e)(1), (e)(4)(G), (H), and (I), and (f) of the Act and implementing §§ 10.23(c); 10.35(b); 10.41; 10.43; 10.45; 10.21(a) and 10.21(d)(6), (7), and (8) of this chapter, under the following conditions:

(a) The system of records must consist of:

(1) Records subject to the provisions of section 552(b)(1) of title 5, United States Code;

(2) Investigatory material compiled for law enforcement purposes, other than material within the scope of § 10.61(a)(2): Provided, however, That if any individual is denied any right, privilege, or benefit to which that individual would otherwise be entitled by Federal law, or for which that individual would otherwise be eligible, as a result of the maintenance of such material, such material is provided to such individual, except to the extent that the disclosure of such material would reveal the identity of a source who furnished information to the Government under an express promise that the identity of the source would be held in confidence, or, prior to September 27, 1975, the effective date of the Privacy Act of 1974, under an implied promise that the identity of the source would be held in confidence;

(3) Records maintained in connection with providing protective services to the President of the United States or other individuals pursuant to section 3056 of title 18, United States Code;

(4) Records required by statute to be maintained and used solely as statistical records;

(5) Investigatory material compiled solely for the purpose of determining suitability, eligibility, or qualifications for Federal civilian employment, military service, Federal contracts, or access to classified information, but only to the extent that the disclosure of such material would reveal the identity of a source who furnished information to the Government under an express promise that the identity of the source would be held in confidence, or, prior to September 27, 1975, the effective date of the Privacy Act of 1974, under an implied promise that the identity of the source would be held in confidence;

(6) Testing or examination material used solely to determine individual qualifications for appointment or promotion in the Federal service the disclosure of which would compromise the objectivity or fairness of the testing or examination process; or

(7) Evaluation material used to determine potential for promotion in the armed services, but only to the extent that the disclosure of such material would reveal the identity of a source

who furnished information to the Government under an express promise that the identity of the source would be held in confidence, or, prior to the effective date of this section, under an implied promise that the identity of the source would be held in confidence.

(b) The requirements (including general notice) of sections 553 (b) (1), (2) and (3), and (c) and (e) of title 5, United States Code, will be met by publication in appendix A to this part, which must, at a minimum, specify:

(1) The name of the systems; and

(2) The specific provisions of the Act from which the system is to be exempted and the reasons therefor.

(c) Any decision to exempt a system of records under this section is subject to the concurrence of the General Counsel.

(d) Any person may petition the Secretary in accordance with the provisions of 49 CFR part 5, to institute a rulemaking for the amendment or repeal of any exemptions established under this section.

[45 FR 8993, Feb. 11, 1980, as amended at 62 FR 23667, May 1, 1997; 73 FR 33329, June 12, 2008]

Subpart H—Fees

§ 10.71 General.

This subpart prescribes fees for services performed for the public under this part by the Department.

§ 10.73 Payment of fees.

The fees prescribed in this subpart may be paid by check, draft, or postal money order payable to the Treasury of the United States.

§ 10.75 Fee schedule.

(a) Copies of documents by photocopy or similar method:	
Each page not larger than 11×17 inches:	
First page	$.25
Each page	.05
(b) Copies of documents by typewriter: Each page	2.00
(c) Certified copies of documents:	
(1) With Department of Transportation seal	3.00
(2) True copy, without seal	1.00
(d) Photographs:	
(1) Black and white print (from negative)	1.25
(2) Black and white print (from print)	3.15
(3) Color print (from negative)	3.50
(4) Color print (from print)	6.25
(e) Duplicate data tapes—each reel of tape or fraction thereof	36.00

The applicant must furnish the necessary number of blank magnetic tapes. The tapes must be compatible for use in the supplier's computer system, ½ inch wide and 2,400 feet long, and must be capable of recording data at a density of 556 or 800 characters per inch. Unless otherwise designated, the tapes will be recorded at 556 CPI density. The Department of Transportation is not responsible for damaged tape. However, if the applicant furnishes a replacement for a damaged tape, the duplication process is completed at no additional charge.

(f) Microreproduction fees are as follows:	
(1) Microfilm copies, each 100 foot roll or less	$3.75
(2) Microfiche copies, each standard size sheet (4″×6″ containing up to 65 frames)	.15
(3) Apertune card to hard copy, each copy	.50
(4) 16mm microfilm to hard copy:	
First	.25
Additional	.07
(g) Computerline printer output, each 1,000 lines or fraction thereof	1.00

§ 10.77 Services performed without charge.

(a) No fee is charged for time spent in searching for records or reviewing or preparing correspondence related to records subject to this part.

(b) No fee is charged for documents furnished in response to:

(1) A request from an employee or former employee of the Department for copies of personnel records of the employee;

(2) A request from a Member of Congress for official use;

(3) A request from a State, territory, U.S. possession, county or municipal government, or an agency thereof;

(4) A request from a court that will serve as a substitute for the personal court appearance of an officer or employee of the Department;

(5) A request from a foreign government or an agency thereof, or an international organization.

(c) Documents are furnished without charge or at a reduced charge, if the Assistant Secretary for Administration or the Administrator concerned, as the case may be, determines that waiver or reduction of the fee is in the public interest, because furnishing the information can be considered as primarily benefiting the general public.

(d) When records are maintained in computer-readable form rather than

human-readable form, one printed copy is made available which has been translated to human-readable form without a charge for translation but in accordance with §10.75(g), regarding computer line-printed charges.

[45 FR 8993, Feb. 11, 1980, as amended at 73 FR 33329, June 12, 2008]

Subpart I—Criminal Penalties

§ 10.81 Improper disclosure.

Any officer or employee of the Department who by virtue of his or her employment or official position, has possession of, or access to, agency records which contain individually identifiable information the disclosure of which is prohibited by this part and who knowing that disclosure of the specific material is so prohibited, willfully discloses the material in any manner to any person or agency not entitled to receive it, is guilty of a misdemeanor and fined not more than $5,000 in accordance with 5 U.S.C. 552a(i)(1).

§ 10.83 Improper maintenance of records.

Any officer or employee of the Department who willfully maintains a system of records without meeting the notice requirements of §10.21(d) of this part is guilty of a misdemeanor and fined not more than $5,000 in accordance with 5 U.S.C. 552a(i)(2).

§ 10.85 Wrongfully obtaining records.

Any person who knowingly and willfully requests or obtains any record concerning an individual from the Department under false pretenses is guilty of a misdemeanor and fined not more than $5,000 in accordance with 5 U.S.C. 552a(i)(3).

APPENDIX TO PART 10—EXEMPTIONS

Part I. General Exemptions

Those portions of the following systems of records that consist of (a) Information compiled for the purpose of identifying individual criminal offenders and alleged offenders and consisting only of identifying data and notations of arrests, the nature and disposition of criminal charges, sentencing, confinement, release, and parole and probation status; (b) information compiled for the purpose of a criminal investigation, including reports of informants and investigators, and associated with an identifiable individual; or (c) reports identifiable to an individual compiled at any stage of the process of enforcement of the criminal laws from arrest or indictment through release from supervision, are exempt from all parts of 5 U.S.C. 552a except subsections (b) (Conditions of disclosure); (c) (1) and (2) (Accounting of certain disclosures); (e)(4) (A) through (F) (Publication of existence and character of system); (e)(6) (Ensure records are accurate, relevant, timely, and complete before disclosure to person other than an agency and other than pursuant to a Freedom of Information Act request), (7) (Restrict recordkeeping on First Amendment rights), (9) (Rules of conduct), (10) (Safeguards), and (11) (Routine use publication); and (i) (Criminal penalties):

A. The Investigative Records System maintained by the Assistant Inspector General for Investigations, Office of the Inspector General, Office of the Secretary (DOT/OST 100).

B. Police Warrant Files and Central Files maintained by the Federal Aviation Administration (DOT/FAA 807).

C. The Investigative Records System maintained by the Federal Aviation Administration regarding criminal investigations conducted by offices of Investigations and Security at headquarters and FAA Regional and Center Security Divisions (DOT/FAA 815).

These exemptions are justified for the following reasons:

1. From subsection (c)(3), because making available to a record subject the accounting of disclosures from records concerning him/her would reveal investigative interest by not only DOT but also the recipient agency, thereby permitting the record subject to take appropriate measures to impede the investigation, as by destroying evidence, intimidating potential witnesses, fleeing the area to avoid the thrust of the investigation, etc.

2. From subsections (d), (e)(4) (G) and (H), (f), and (g), because granting an individual access to investigative records, and granting him/her rights to amend/contest that information, interfere with the overall law enforcement process by revealing a pending sensitive investigation, possibly identify a confidential source, disclose information that would constitute an unwarranted invasion of another individual's personal privacy, reveal a sensitive investigative technique, or constitute a potential danger to the health or safety of law enforcement personnel.

3. From subsection (e)(1), because it is often impossible to determine relevancy or necessity of information in the early stages of an investigation. The value of such information is a question of judgement and timing: what appears relevant and necessary when collected may ultimately be evaluated

and viewed as irrelevant and unnecessary to an investigation. In addition, DOT may obtain information concerning the violation of laws other than those within the scope of its jurisdiction. In the interest of effective law enforcement, DOT should retain this information because it may aid in establishing patterns of unlawful activity and provide leads for other law enforcement agencies. Further, in obtaining evidence during an investigation, information may be provided to DOT that relates to matters incidental to the main purpose of the investigation but that may be pertinent to the investigative jurisdiction of another agency. Such information cannot readily be identified.

4. From subsection (e)(2), because in a law enforcement investigation it is usually counterproductive to collect information to the greatest extent practicable directly from the subject of the information. It is not always feasible to rely upon the subject of an investigation as a source for information that may implicate him/her in illegal activities. In addition, collecting information directly from the subject could seriously compromise an investigation by prematurely revealing its nature and scope, or could provide the subject with an opportunity to conceal criminal activities, or intimidate potential sources, in order to avoid apprehension.

5. From subsection (e)(3), because providing such notice to the subject of an investigation, or to other individual sources, could seriously compromise the investigation by prematurely revealing its nature and scope, or could inhibit cooperation, permit the subject to evade apprehension, or cause interference with undercover activities.

Part II. Specific Exemptions

A. The following systems of records are exempt from subsection (c)(3) (Accounting of Certain Disclosures), (d) (Access to Records), (e)(4)(G), (H), and (I) (Agency Requirements), and (f) (Agency Rules) of 5 USC 552a, to the extent that they contain investigatory material compiled for law enforcement purposes in accordance with 5 USC 552a(k)(2):

1. Investigative Record System (DOT/FAA 815) maintained by the Federal Aviation Administration at the Office of Civil Aviation Security in Washington, DC; the FAA regional Civil Aviation Security Divisions; the Civil Aviation Security Division at the Mike Monroney Aeronautical Center in Oklahoma City, Oklahoma; the FAA Civil Aviation Security Staff at the FAA Technical Center in Atlantic City, New Jersey; and the various Federal Records Centers located throughout the country.

2. FHWA Investigations Case File System, maintained by the Office of Program Review and Investigations, Federal Highway Administration (DOT/FHWA 214).

3. [Reserved]

4. FHWA Motor Carrier Safety Proposed Civil and Criminal Enforcement Cases, maintained by the Bureau of Motor Carrier Safety, Federal Highway Administration (DOT/FHWA 204).

5. DOT/NHTSA Investigations of Alleged Misconduct or Conflict of Interest, maintained by the Associate Administrator for Administration, National Highway Traffic Safety Administration (DOT/NHTSA 458).

6. [Reserved]

7. Suspected Unapproved Parts (SUP) Program, maintained by the Federal Aviation Administration (DOT/FAA 852).

8. Motor Carrier Management Information System (MCMIS), maintained by the Federal Motor Carrier Safety Administration (DOT/FMCSA 001). These exemptions are justified for the following reasons:

9–11. [Reserved]

12. Civil Aviation Security System (DOT/FAA 813), maintained by the Office of Civil Aviation Security Policy and Planning, Federal Aviation Administration.

These exemptions are justified for the following reasons:

1. From subsection (c)(3), because making available to a record subject the accounting of disclosures from records concerning him/her would reveal investigative interest by not only DOT but also the recipient agency, thereby permitting the record subject to take appropriate measures to impede the investigation, as by destroying evidence, intimidating potential witnesses, fleeing the area to avoid the thrust of the investigation, etc.

2. From subsections (d), (e)(4)(G), (H), and (I), and (f), because granting an individual access to investigative records, and granting him/her access to investigative records with that information, could interfere with the overall law enforcement process by revealing a pending sensitive investigation, possibly identify a confidential source, disclose information that would constitute an unwarranted invasion of another individual's personal privacy, reveal a sensitive investigative technique, or constitute a potential danger to the health or safety of law enforcement personnel.

B. The following systems of records are exempt from subsections (c)(3) (Accounting of Certain Disclosures) and (d) (Access to Records) of 5 U.S.C. 552a, in accordance with 5 U.S.C. 552a(k)(2):

1. General Air Transportation Records on Individuals, maintained by various offices in the Federal Aviation Administration (DOT/FAA 847).

2. Investigative Records System, maintained by the Assistant Inspector General for Investigations in the Office of the Inspector General (DOT/OST 100).

These exemptions are justified for the following reasons:

1. From subsection (c)(3), because making available to a record subject the accounting of disclosures from records concerning him/her would reveal investigative interest by not only DOT but also the recipient agency, thereby permitting the record subject to take appropriate measures to impede the investigation, as by destroying evidence, intimidating potential witnesses, fleeing the area to avoid the thrust of the investigation, etc.

2. From subsection (d), because granting an individual access to investigative records could interfere with the overall law enforcement process by revealing a pending sensitive investigation, possibly identify a confidential source, disclose information that would constitute an unwarranted invasion of another individual's personal privacy, reveal a sensitive investigative technique, or constitute a potential danger to the health or safety of law enforcement personnel.

C. The system of records known as the Alaska Railroad Examination of Operating Personnel, maintained by the Alaska Railroad, Federal Railroad Administration (DOT/FRA 100), is exempt from the provisions of subsection (d) of 5 U.S.C. 552a. The release of these records would compromise their value as impartial measurement standards for appointment and promotion within the Federal Service.

D. Those portions of the following systems of records consisting of investigatory material compiled for the purpose of determining suitability, eligibility, or qualifications for Federal civilian employment, military service, or access to classified information or used to determine potential for promotion in the armed services, are exempt from sections (c)(3) (Accounting of Certain Disclosures), (d) (Access to Records), (e)(4) (G), (H), and (I) (Agency Requirements), and (f) (Agency Rules) of 5 U.S.C. 552a to the extent that disclosure of such material would reveal the identity of a source who provided information to the Government under an express or, prior to September 27, 1975, an implied promise of confidentiality (5 U.S.C. 552a(k) (5) and (7)):

1. Investigative Records System, maintained by the Assistant Inspector General for Investigations in the Office of the Inspector General (DOT/OST 100).

2. Investigative Record System, maintained by the Federal Aviation Administration at FAA Regional and Center Air Transportation Security Divisions; the Investigations and Security Division, Aeronautical Center; and Office of Investigations and Security, Headquarters, Washington, D.C. (DOT/FAA 815).

3. Files pursuant to suitability for employment with National Highway Traffic Safety Administration (DOT/NHTSA–457) containing confidential investigatory reports.

The purpose of these exemptions is to prevent disclosure of the identities of sources who provide information to the government concerning the suitability, eligibility, or qualifications of individuals for Federal civilian employment, contracts, access to classified information, or appointment or promotion in the armed services, and who are expressly or, prior to September 27, 1975, implied promised confidentiality (5 U.S.C. 552a(k) (5) and (7)).

E. Those portions of the following systems of records consisting of testing or examination material used solely to determine individual qualifications for appointment or promotion in the Federal Service are exempt from subsections (c)(3) (Accounting of Certain Disclosures), (d) (Access to Records), (e)(4) (G), (H) and (I) (Agency Requirements), and (f) (Agency Rules) of 5 U.S.C. 552a:

1. Reference Files (DOT/NHTSA 457), maintained by the National Highway Traffic Safety Administration personnel offices to determine fitness for employment prior to hiring.

The purpose of these exemptions is to preserve the value of these records as impartial measurement standards for appointment and promotion within the Federal service.

F. Those portions of the following systems of records which consist of information properly classified in the interest of national defense or foreign policy in accordance with 5 U.S.C. 552(b)(1) are exempt from sections (c)(3) (Accounting of Certain Disclosures), (d) (Access to Records), (e)(4) (G), (H) and (I) (Agency Requirements), and (f) (Agency Rules) of 5 U.S.C. 552a:

1. Investigative Record System maintained by the Assistant Inspector General for Investigations in the Office of the Inspector General (DOT/OST 100).

2. Personnel Security Records System, maintained by the Office of Investigations and Security, Office of the Secretary (DOT/OST 016).

3. Civil Aviation Security System (DOT/FAA 813), maintained by the Office of Civil Aviation Security, Federal Aviation Administration.

The purpose of these exemptions is to prevent the disclosure of material authorized to be kept secret in the interest of national defense or foreign policy, in accordance with 5 U.S.C. 552(b)(1) and 552a(k)(1).

G. Those portions of the following systems of records which consist of information properly classified in the interest of national defense or foreign policy in accordance with 5 U.S.C. 552a(b)(1) are exempt from subsections (c)(3) (Accounting of Certain Disclosures) and (d) (Access to Records) of 5 U.S.C. 552a:

1. Investigative Record System (DOT/FAA 815) maintained by the Federal Aviation Administration at the Office of Civil Aviation Security in Washington, DC; the FAA regional Civil Aviation Security Divisions; the Civil Aviation Security Division at the Mike

Monroney Aeronautical Center in Oklahoma City, Oklahoma; the FAA Civil Aviation Security Staff at the FAA Technical Center in Atlantic City, New Jersey; and the various Federal Records Centers located throughout the country.

The purpose of these exemptions is to prevent the disclosure of material authorized to be kept secret in the interest of national defense or foreign policy, in accordance with 5 U.S.C. 552(b)(1) and 552a(k)(1).

[45 FR 8993, Feb. 11, 1980, as amended at 58 FR 67697, Dec. 22, 1993; 59 FR 13662, Mar. 23, 1994; 60 FR 43983, Aug. 24, 1995. Redesignated at 62 FR 23667, May 1, 1997, as amended at 63 FR 2172, Jan. 14, 1998; 63 FR 4197, Jan. 28, 1998; 66 FR 20407, Apr. 23, 2001; 73 FR 33329, June 12, 2008]

PART 11—PROTECTION OF HUMAN SUBJECTS

Sec.

11.101 To what does this policy apply?
11.102 Definitions.
11.103 Assuring compliance with this policy—research conducted or supported by any Federal Department or Agency.
11.104–11.106 [Reserved]
11.107 IRB membership.
11.108 IRB functions and operations.
11.109 IRB review of research.
11.110 Expedited review procedures for certain kinds of research involving no more than minimal risk, and for minor changes in approved research.
11.111 Criteria for IRB approval of research.
11.112 Review by institution.
11.113 Suspension or termination of IRB approval of research.
11.114 Cooperative research.
11.115 IRB records.
11.116 General requirements for informed consent.
11.117 Documentation of informed consent.
11.118 Applications and proposals lacking definite plans for involvement of human subjects.
11.119 Research undertaken without the intention of involving human subjects.
11.120 Evaluation and disposition of applications and proposals for research to be conducted or supported by a Federal Department or Agency.
11.121 [Reserved]
11.122 Use of Federal funds.
11.123 Early termination of research support: Evaluation of applications and proposals.
11.124 Conditions.

AUTHORITY: 5 U.S.C. 301; 42 U.S.C. 300v–1(b).

SOURCE: 56 FR 28012, 28023, June 18, 1991, unless otherwise noted.

§ 11.101 To what does this policy apply?

(a) Except as provided in paragraph (b) of this section, this policy applies to all research involving human subjects conducted, supported or otherwise subject to regulation by any federal department or agency which takes appropriate administrative action to make the policy applicable to such research. This includes research conducted by federal civilian employees or military personnel, except that each department or agency head may adopt such procedural modifications as may be appropriate from an administrative standpoint. It also includes research conducted, supported, or otherwise subject to regulation by the federal government outside the United States.

(1) Research that is conducted or supported by a federal department or agency, whether or not it is regulated as defined in §11.102(e), must comply with all sections of this policy.

(2) Research that is neither conducted nor supported by a federal department or agency but is subject to regulation as defined in §11.102(e) must be reviewed and approved, in compliance with §11.101, §11.102, and §11.107 through §11.117 of this policy, by an institutional review board (IRB) that operates in accordance with the pertinent requirements of this policy.

(b) Unless otherwise required by department or agency heads, research activities in which the only involvement of human subjects will be in one or more of the following categories are exempt from this policy:

(1) Research conducted in established or commonly accepted educational settings, involving normal educational practices, such as (i) research on regular and special education instructional strategies, or (ii) research on the effectiveness of or the comparison among instructional techniques, curricula, or classroom management methods.

(2) Research involving the use of educational tests (cognitive, diagnostic, aptitude, achievement), survey procedures, interview procedures or observation of public behavior, unless:

(i) Information obtained is recorded in such a manner that human subjects

can be identified, directly or through identifiers linked to the subjects; and

(ii) Any disclosure of the human subjects' responses outside the research could reasonably place the subjects at risk of criminal or civil liability or be damaging to the subjects' financial standing, employability, or reputation.

(3) Research involving the use of educational tests (cognitive, diagnostic, aptitude, achievement), survey procedures, interview procedures, or observation of public behavior that is not exempt under paragraph (b)(2) of this section, if:

(i) The human subjects are elected or appointed public officials or candidates for public office; or (ii) federal statute(s) require(s) without exception that the confidentiality of the personally identifiable information will be maintained throughout the research and thereafter.

(4) Research, involving the collection or study of existing data, documents, records, pathological specimens, or diagnostic specimens, if these sources are publicly available or if the information is recorded by the investigator in such a manner that subjects cannot be identified, directly or through identifiers linked to the subjects.

(5) Research and demonstration projects which are conducted by or subject to the approval of department or agency heads, and which are designed to study, evaluate, or otherwise examine:

(i) Public benefit or service programs; (ii) procedures for obtaining benefits or services under those programs; (iii) possible changes in or alternatives to those programs or procedures; or (iv) possible changes in methods or levels of payment for benefits or services under those programs.

(6) Taste and food quality evaluation and consumer acceptance studies, (i) if wholesome foods without additives are consumed or (ii) if a food is consumed that contains a food ingredient at or below the level and for a use found to be safe, or agricultural chemical or environmental contaminant at or below the level found to be safe, by the Food and Drug Administration or approved by the Environmental Protection Agency or the Food Safety and Inspection Service of the U.S. Department of Agriculture.

(c) Department or agency heads retain final judgment as to whether a particular activity is covered by this policy.

(d) Department or agency heads may require that specific research activities or classes of research activities conducted, supported, or otherwise subject to regulation by the department or agency but not otherwise covered by this policy, comply with some or all of the requirements of this policy.

(e) Compliance with this policy requires compliance with pertinent federal laws or regulations which provide additional protections for human subjects.

(f) This policy does not affect any state or local laws or regulations which may otherwise be applicable and which provide additional protections for human subjects.

(g) This policy does not affect any foreign laws or regulations which may otherwise be applicable and which provide additional protections to human subjects of research.

(h) When research covered by this policy takes place in foreign countries, procedures normally followed in the foreign countries to protect human subjects may differ from those set forth in this policy. [An example is a foreign institution which complies with guidelines consistent with the World Medical Assembly Declaration (Declaration of Helsinki amended 1989) issued either by sovereign states or by an organization whose function for the protection of human research subjects is internationally recognized.] In these circumstances, if a department or agency head determines that the procedures prescribed by the institution afford protections that are at least equivalent to those provided in this policy, the department or agency head may approve the substitution of the foreign procedures in lieu of the procedural requirements provided in this policy. Except when otherwise required by statute, Executive Order, or the department or agency head, notices of these actions as they occur will be published in the FEDERAL REGISTER or will be otherwise published as provided in department or agency procedures.

(i) Unless otherwise required by law, department or agency heads may waive the applicability of some or all of the provisions of this policy to specific research activities or classes of research activities otherwise covered by this policy. Except when otherwise required by statute or Executive Order, the department or agency head shall forward advance notices of these actions to the Office for Human Research Protections, Department of Health and Human Services (HHS), or any successor office, and shall also publish them in the FEDERAL REGISTER or in such other manner as provided in department or agency procedures.[1]

[56 FR 28012, 28023, June 18, 1991; 56 FR 29756, June 28, 1991, as amended at 70 FR 36328, June 23, 2005]

§ 11.102 Definitions.

(a) *Department or agency head* means the head of any federal department or agency and any other officer or employee of any department or agency to whom authority has been delegated.

(b) *Institution* means any public or private entity or agency (including federal, state, and other agencies).

(c) *Legally authorized representative* means an individual or judicial or other body authorized under applicable law to consent on behalf of a prospective subject to the subject's participation in the procedure(s) involved in the research.

(d) *Research* means a systematic investigation, including research development, testing and evaluation, designed to develop or contribute to generalizable knowledge. Activities which meet this definition constitute research for purposes of this policy, whether or not they are conducted or supported under a program which is considered research for other purposes. For example, some demonstration and service programs may include research activities.

(e) *Research subject to regulation,* and similar terms are intended to encompass those research activities for which a federal department or agency has specific responsibility for regulating as a research activity, (for example, Investigational New Drug requirements administered by the Food and Drug Administration). It does not include research activities which are incidentally regulated by a federal department or agency solely as part of the department's or agency's broader responsibility to regulate certain types of activities whether research or non-research in nature (for example, Wage and Hour requirements administered by the Department of Labor).

(f) *Human subject* means a living individual about whom an investigator (whether professional or student) conducting research obtains

(1) Data through intervention or interaction with the individual, or

(2) Identifiable private information.

Intervention includes both physical procedures by which data are gathered (for example, venipuncture) and manipulations of the subject or the subject's environment that are performed for research purposes. Interaction includes communication or interpersonal contact between investigator and subject. ''Private information'' includes information about behavior that occurs in a context in which an individual can reasonably expect that no observation or recording is taking place, and information which has been provided for specific purposes by an individual and which the individual can reasonably expect will not be made public (for example, a medical record). Private information must be individually identifiable (i.e., the identity of the subject is or may readily be ascertained by the investigator or associated with the information) in order for obtaining the information to constitute research involving human subjects.

(g) *IRB* means an institutional review board established in accord with and

[1] Institutions with HHS-approved assurances on file will abide by provisions of title 45 CFR part 46 subparts A–D. Some of the other Departments and Agencies have incorporated all provisions of title 45 CFR part 46 into their policies and procedures as well. However, the exemptions at 45 CFR 46.101(b) do not apply to research involving prisoners, subpart C. The exemption at 45 CFR 46.101(b)(2), for research involving survey or interview procedures or observation of public behavior, does not apply to research with children, subpart D, except for research involving observations of public behavior when the investigator(s) do not participate in the activities being observed.

for the purposes expressed in this policy.

(h) *IRB approval* means the determination of the IRB that the research has been reviewed and may be conducted at an institution within the constraints set forth by the IRB and by other institutional and federal requirements.

(i) *Minimal risk* means that the probability and magnitude of harm or discomfort anticipated in the research are not greater in and of themselves than those ordinarily encountered in daily life or during the performance of routine physical or psychological examinations or tests.

(j) *Certification* means the official notification by the institution to the supporting department or agency, in accordance with the requirements of this policy, that a research project or activity involving human subjects has been reviewed and approved by an IRB in accordance with an approved assurance.

§ 11.103 Assuring compliance with this policy—research conducted or supported by any Federal Department or Agency.

(a) Each institution engaged in research which is covered by this policy and which is conducted or supported by a federal department or agency shall provide written assurance satisfactory to the department or agency head that it will comply with the requirements set forth in this policy. In lieu of requiring submission of an assurance, individual department or agency heads shall accept the existence of a current assurance, appropriate for the research in question, on file with the Office for Human Research Protections, HHS, or any successor office, and approved for federalwide use by that office. When the existence of an HHS-approved assurance is accepted in lieu of requiring submission of an assurance, reports (except certification) required by this policy to be made to department and agency heads shall also be made to the Office for Human Research Protections, HHS, or any successor office.

(b) Departments and agencies will conduct or support research covered by this policy only if the institution has an assurance approved as provided in this section, and only if the institution has certified to the department or agency head that the research has been reviewed and approved by an IRB provided for in the assurance, and will be subject to continuing review by the IRB. Assurances applicable to federally supported or conducted research shall at a minimum include:

(1) A statement of principles governing the institution in the discharge of its responsibilities for protecting the rights and welfare of human subjects of research conducted at or sponsored by the institution, regardless of whether the research is subject to federal regulation. This may include an appropriate existing code, declaration, or statement of ethical principles, or a statement formulated by the institution itself. This requirement does not preempt provisions of this policy applicable to department- or agency-supported or regulated research and need not be applicable to any research exempted or waived under §11.101 (b) or (i).

(2) Designation of one or more IRBs established in accordance with the requirements of this policy, and for which provisions are made for meeting space and sufficient staff to support the IRB's review and recordkeeping duties.

(3) A list of IRB members identified by name; earned degrees; representative capacity; indications of experience such as board certifications, licenses, etc., sufficient to describe each member's chief anticipated contributions to IRB deliberations; and any employment or other relationship between each member and the institution; for example: full-time employee, part-time employee, member of governing panel or board, stockholder, paid or unpaid consultant. Changes in IRB membership shall be reported to the department or agency head, unless in accord with §11.103(a) of this policy, the existence of an HHS-approved assurance is accepted. In this case, change in IRB membership shall be reported to the Office for Human Research Protections, HHS, or any successor ofice.

(4) Written procedures which the IRB will follow (i) for conducting its initial and continuing review of research and for reporting its findings and actions to the investigator and the institution;

(ii) for determining which projects require review more often than annually and which projects need verification from sources other than the investigators that no material changes have occurred since previous IRB review; and (iii) for ensuring prompt reporting to the IRB of proposed changes in a research activity, and for ensuring that such changes in approved research, during the period for which IRB approval has already been given, may not be initiated without IRB review and approval except when necessary to eliminate apparent immediate hazards to the subject.

(5) Written procedures for ensuring prompt reporting to the IRB, appropriate institutional officials, and the department or agency head of (i) any unanticipated problems involving risks to subjects or others or any serious or continuing noncompliance with this policy or the requirements or determinations of the IRB and (ii) any suspension or termination of IRB approval.

(c) The assurance shall be executed by an individual authorized to act for the institution and to assume on behalf of the institution the obligations imposed by this policy and shall be filed in such form and manner as the department or agency head prescribes.

(d) The department or agency head will evaluate all assurances submitted in accordance with this policy through such officers and employees of the department or agency and such experts or consultants engaged for this purpose as the department or agency head determines to be appropriate. The department or agency head's evaluation will take into consideration the adequacy of the proposed IRB in light of the anticipated scope of the institution's research activities and the types of subject populations likely to be involved, the appropriateness of the proposed initial and continuing review procedures in light of the probable risks, and the size and complexity of the institution.

(e) On the basis of this evaluation, the department or agency head may approve or disapprove the assurance, or enter into negotiations to develop an approvable one. The department or agency head may limit the period during which any particular approved assurance or class of approved assurances shall remain effective or otherwise condition or restrict approval.

(f) Certification is required when the research is supported by a federal department or agency and not otherwise exempted or waived under §11.101 (b) or (i). An institution with an approved assurance shall certify that each application or proposal for research covered by the assurance and by §11.103 of this Policy has been reviewed and approved by the IRB. Such certification must be submitted with the application or proposal or by such later date as may be prescribed by the department or agency to which the application or proposal is submitted. Under no condition shall research covered by §11.103 of the Policy be supported prior to receipt of the certification that the research has been reviewed and approved by the IRB. Institutions without an approved assurance covering the research shall certify within 30 days after receipt of a request for such a certification from the department or agency, that the application or proposal has been approved by the IRB. If the certification is not submitted within these time limits, the application or proposal may be returned to the institution.

(Approved by the Office of Management and Budget under Control Number 0990–0260.)

[56 FR 28012, 28023, June 18, 1991; 56 FR 29756, June 28, 1991, as amended at 70 FR 36328, June 23, 2005]

§§ 11.104–11.106 [Reserved]

§ 11.107 IRB membership.

(a) Each IRB shall have at least five members, with varying backgrounds to promote complete and adequate review of research activities commonly conducted by the institution. The IRB shall be sufficiently qualified through the experience and expertise of its members, and the diversity of the members, including consideration of race, gender, and cultural backgrounds and sensitivity to such issues as community attitudes, to promote respect for its advice and counsel in safeguarding the rights and welfare of human subjects. In addition to possessing the professional competence necessary to review specific research

activities, the IRB shall be able to ascertain the acceptability of proposed research in terms of institutional commitments and regulations, applicable law, and standards of professional conduct and practice. The IRB shall therefore include persons knowledgeable in these areas. If an IRB regularly reviews research that involves a vulnerable category of subjects, such as children, prisoners, pregnant women, or handicapped or mentally disabled persons, consideration shall be given to the inclusion of one or more individuals who are knowledgeable about and experienced in working with these subjects.

(b) Every nondiscriminatory effort will be made to ensure that no IRB consists entirely of men or entirely of women, including the institution's consideration of qualified persons of both sexes, so long as no selection is made to the IRB on the basis of gender. No IRB may consist entirely of members of one profession.

(c) Each IRB shall include at least one member whose primary concerns are in scientific areas and at least one member whose primary concerns are in nonscientific areas.

(d) Each IRB shall include at least one member who is not otherwise affiliated with the institution and who is not part of the immediate family of a person who is affiliated with the institution.

(e) No IRB may have a member participate in the IRB's initial or continuing review of any project in which the member has a conflicting interest, except to provide information requested by the IRB.

(f) An IRB may, in its discretion, invite individuals with competence in special areas to assist in the review of issues which require expertise beyond or in addition to that available on the IRB. These individuals may not vote with the IRB.

§ 11.108 IRB functions and operations.

In order to fulfill the requirements of this policy each IRB shall:

(a) Follow written procedures in the same detail as described in § 11.103(b)(4) and, to the extent required by, § 11.103(b)(5).

(b) Except when an expedited review procedure is used (see § 11.110), review proposed research at convened meetings at which a majority of the members of the IRB are present, including at least one member whose primary concerns are in nonscientific areas. In order for the research to be approved, it shall receive the approval of a majority of those members present at the meeting.

§ 11.109 IRB review of research.

(a) An IRB shall review and have authority to approve, require modifications in (to secure approval), or disapprove all research activities covered by this policy.

(b) An IRB shall require that information given to subjects as part of informed consent is in accordance with § 11.116. The IRB may require that information, in addition to that specifically mentioned in § 11.116, be given to the subjects when in the IRB's judgment the information would meaningfully add to the protection of the rights and welfare of subjects.

(c) An IRB shall require documentation of informed consent or may waive documentation in accordance with § 11.117.

(d) An IRB shall notify investigators and the institution in writing of its decision to approve or disapprove the proposed research activity, or of modifications required to secure IRB approval of the research activity. If the IRB decides to disapprove a research activity, it shall include in its written notification a statement of the reasons for its decision and give the investigator an opportunity to respond in person or in writing.

(e) An IRB shall conduct continuing review of research covered by this policy at intervals appropriate to the degree of risk, but not less than once per year, and shall have authority to observe or have a third party observe the consent process and the research.

(Approved by the Office of Management and Budget under Control Number 0990–0260.)

[56 FR 28012, 28022, June 18, 1991, as amended at 70 FR 36328, June 23, 2005]

§ 11.110 Expedited review procedures for certain kinds of research involving no more than minimal risk, and for minor changes in approved research.

(a) The Secretary, HHS, has established, and published as a Notice in the FEDERAL REGISTER, a list of categories of research that may be reviewed by the IRB through an expedited review procedure. The list will be amended, as appropriate after consultation with other departments and agencies, through periodic republication by the Secretary, HHS, in the FEDERAL REGISTER. A copy of the list is available from the Office for Human Research Protections, HHS, or any successor office.

(b) An IRB may use the expedited review procedure to review either or both of the following:

(1) Some or all of the research appearing on the list and found by the reviewer(s) to involve no more than minimal risk,

(2) Minor changes in previously approved research during the period (of one year or less) for which approval is authorized.

Under an expedited review procedure, the review may be carried out by the IRB chairperson or by one or more experienced reviewers designated by the chairperson from among members of the IRB. In reviewing the research, the reviewers may exercise all of the authorities of the IRB except that the reviewers may not disapprove the research. A research activity may be disapproved only after review in accordance with the non-expedited procedure set forth in § 11.108(b).

(c) Each IRB which uses an expedited review procedure shall adopt a method for keeping all members advised of research proposals which have been approved under the procedure.

(d) The department or agency head may restrict, suspend, terminate, or choose not to authorize an institution's or IRB's use of the expedited review procedure.

[56 FR 28012, 28022, June 18, 1991, as amended at 70 FR 36328, June 23, 2005]

§ 11.111 Criteria for IRB approval of research.

(a) In order to approve research covered by this policy the IRB shall determine that all of the following requirements are satisfied:

(1) Risks to subjects are minimized: (i) By using procedures which are consistent with sound research design and which do not unnecessarily expose subjects to risk, and (ii) whenever appropriate, by using procedures already being performed on the subjects for diagnostic or treatment purposes.

(2) Risks to subjects are reasonable in relation to anticipated benefits, if any, to subjects, and the importance of the knowledge that may reasonably be expected to result. In evaluating risks and benefits, the IRB should consider only those risks and benefits that may result from the research (as distinguished from risks and benefits of therapies subjects would receive even if not participating in the research). The IRB should not consider possible long-range effects of applying knowledge gained in the research (for example, the possible effects of the research on public policy) as among those research risks that fall within the purview of its responsibility.

(3) Selection of subjects is equitable. In making this assessment the IRB should take into account the purposes of the research and the setting in which the research will be conducted and should be particularly cognizant of the special problems of research involving vulnerable populations, such as children, prisoners, pregnant women, mentally disabled persons, or economically or educationally disadvantaged persons.

(4) Informed consent will be sought from each prospective subject or the subject's legally authorized representative, in accordance with, and to the extent required by § 11.116.

(5) Informed consent will be appropriately documented, in accordance with, and to the extent required by § 11.117.

(6) When appropriate, the research plan makes adequate provision for monitoring the data collected to ensure the safety of subjects.

(7) When appropriate, there are adequate provisions to protect the privacy

of subjects and to maintain the confidentiality of data.

(b) When some or all of the subjects are likely to be vulnerable to coercion or undue influence, such as children, prisoners, pregnant women, mentally disabled persons, or economically or educationally disadvantaged persons, additional safeguards have been included in the study to protect the rights and welfare of these subjects.

§ 11.112 Review by institution.

Research covered by this policy that has been approved by an IRB may be subject to further appropriate review and approval or disapproval by officials of the institution. However, those officials may not approve the research if it has not been approved by an IRB.

§ 11.113 Suspension or termination of IRB approval of research.

An IRB shall have authority to suspend or terminate approval of research that is not being conducted in accordance with the IRB's requirements or that has been associated with unexpected serious harm to subjects. Any suspension or termination of approval shall include a statement of the reasons for the IRB's action and shall be reported promptly to the investigator, appropriate institutional officials, and the department or agency head.

(Approved by the Office of Management and Budget under Control Number 0990–0260.)

[56 FR 28012, 28022, June 18, 1991, as amended at 70 FR 36328, June 23, 2005]

§ 11.114 Cooperative research.

Cooperative research projects are those projects covered by this policy which involve more than one institution. In the conduct of cooperative research projects, each institution is responsible for safeguarding the rights and welfare of human subjects and for complying with this policy. With the approval of the department or agency head, an institution participating in a cooperative project may enter into a joint review arrangement, rely upon the review of another qualified IRB, or make similar arrangements for avoiding duplication of effort.

§ 11.115 IRB records.

(a) An institution, or when appropriate an IRB, shall prepare and maintain adequate documentation of IRB activities, including the following:

(1) Copies of all research proposals reviewed, scientific evaluations, if any, that accompany the proposals, approved sample consent documents, progress reports submitted by investigators, and reports of injuries to subjects.

(2) Minutes of IRB meetings which shall be in sufficient detail to show attendance at the meetings; actions taken by the IRB; the vote on these actions including the number of members voting for, against, and abstaining; the basis for requiring changes in or disapproving research; and a written summary of the discussion of controverted issues and their resolution.

(3) Records of continuing review activities.

(4) Copies of all correspondence between the IRB and the investigators.

(5) A list of IRB members in the same detail as described is § 11.103(b)(3).

(6) Written procedures for the IRB in the same detail as described in § 11.103(b)(4) and § 11.103(b)(5).

(7) Statements of significant new findings provided to subjects, as required by § 11.116(b)(5).

(b) The records required by this policy shall be retained for at least 3 years, and records relating to research which is conducted shall be retained for at least 3 years after completion of the research. All records shall be accessible for inspection and copying by authorized representatives of the department or agency at reasonable times and in a reasonable manner.

(Approved by the Office of Management and Budget under Control Number 0990–0260.)

[56 FR 28012, 28022, June 18, 1991, as amended at 70 FR 36328, June 23, 2005]

§ 11.116 General requirements for informed consent.

Except as provided elsewhere in this policy, no investigator may involve a human being as a subject in research covered by this policy unless the investigator has obtained the legally effective informed consent of the subject or

the subject's legally authorized representative. An investigator shall seek such consent only under circumstances that provide the prospective subject or the representative sufficient opportunity to consider whether or not to participate and that minimize the possibility of coercion or undue influence. The information that is given to the subject or the representative shall be in language understandable to the subject or the representative. No informed consent, whether oral or written, may include any exculpatory language through which the subject or the representative is made to waive or appear to waive any of the subject's legal rights, or releases or appears to release the investigator, the sponsor, the institution or its agents from liability for negligence.

(a) Basic elements of informed consent. Except as provided in paragraph (c) or (d) of this section, in seeking informed consent the following information shall be provided to each subject:

(1) A statement that the study involves research, an explanation of the purposes of the research and the expected duration of the subject's participation, a description of the procedures to be followed, and identification of any procedures which are experimental;

(2) A description of any reasonably foreseeable risks or discomforts to the subject;

(3) A description of any benefits to the subject or to others which may reasonably be expected from the research;

(4) A disclosure of appropriate alternative procedures or courses of treatment, if any, that might be advantageous to the subject;

(5) A statement describing the extent, if any, to which confidentiality of records identifying the subject will be maintained;

(6) For research involving more than minimal risk, an explanation as to whether any compensation and an explanation as to whether any medical treatments are available if injury occurs and, if so, what they consist of, or where further information may be obtained;

(7) An explanation of whom to contact for answers to pertinent questions about the research and research subjects' rights, and whom to contact in the event of a research-related injury to the subject; and

(8) A statement that participation is voluntary, refusal to participate will involve no penalty or loss of benefits to which the subject is otherwise entitled, and the subject may discontinue participation at any time without penalty or loss of benefits to which the subject is otherwise entitled.

(b) Additional elements of informed consent. When appropriate, one or more of the following elements of information shall also be provided to each subject:

(1) A statement that the particular treatment or procedure may involve risks to the subject (or to the embryo or fetus, if the subject is or may become pregnant) which are currently unforeseeable;

(2) Anticipated circumstances under which the subject's participation may be terminated by the investigator without regard to the subject's consent;

(3) Any additional costs to the subject that may result from participation in the research;

(4) The consequences of a subject's decision to withdraw from the research and procedures for orderly termination of participation by the subject;

(5) A statement that significant new findings developed during the course of the research which may relate to the subject's willingness to continue participation will be provided to the subject; and

(6) The approximate number of subjects involved in the study.

(c) An IRB may approve a consent procedure which does not include, or which alters, some or all of the elements of informed consent set forth above, or waive the requirement to obtain informed consent provided the IRB finds and documents that:

(1) The research or demonstration project is to be conducted by or subject to the approval of state or local government officials and is designed to study, evaluate, or otherwise examine: (i) public benefit of service programs; (ii) procedures for obtaining benefits or services under those programs; (iii) possible changes in or alternatives to those programs or procedures; or (iv)

possible changes in methods or levels of payment for benefits or services under those programs; and

(2) The research could not practicably be carried out without the waiver or alteration.

(d) An IRB may approve a consent procedure which does not include, or which alters, some or all of the elements of informed consent set forth in this section, or waive the requirements to obtain informed consent provided the IRB finds and documents that:

(1) The research involves no more than minimal risk to the subjects;

(2) The waiver or alteration will not adversely affect the rights and welfare of the subjects;

(3) The research could not practicably be carried out without the waiver or alteration; and

(4) Whenever appropriate, the subjects will be provided with additional pertinent information after participation.

(e) The informed consent requirements in this policy are not intended to preempt any applicable Federal, state, or local laws which require additional information to be disclosed in order for informed consent to be legally effective.

(f) Nothing in this policy is intended to limit the authority of a physician to provide emergency medical care, to the extent the physician is permitted to do so under applicable Federal, state, or local law.

(Approved by the Office of Management and Budget under Control Number 0990–0260.)

[56 FR 28012, 28022, June 18, 1991, as amended at 70 FR 36328, June 23, 2005]

§ 11.117 Documentation of informed consent.

(a) Except as provided in paragraph (c) of this section, informed consent shall be documented by the use of a written consent form approved by the IRB and signed by the subject or the subject's legally authorized representative. A copy shall be given to the person signing the form.

(b) Except as provided in paragraph (c) of this section, the consent form may be either of the following:

(1) A written consent document that embodies the elements of informed consent required by §11.116. This form may be read to the subject or the subject's legally authorized representative, but in any event, the investigator shall give either the subject or the representative adequate opportunity to read it before it is signed; or

(2) A short form written consent document stating that the elements of informed consent required by §11.116 have been presented orally to the subject or the subject's legally authorized representative. When this method is used, there shall be a witness to the oral presentation. Also, the IRB shall approve a written summary of what is to be said to the subject or the representative. Only the short form itself is to be signed by the subject or the representative. However, the witness shall sign both the short form and a copy of the summary, and the person actually obtaining consent shall sign a copy of the summary. A copy of the summary shall be given to the subject or the representative, in addition to a copy of the short form.

(c) An IRB may waive the requirement for the investigator to obtain a signed consent form for some or all subjects if it finds either:

(1) That the only record linking the subject and the research would be the consent document and the principal risk would be potential harm resulting from a breach of confidentiality. Each subject will be asked whether the subject wants documentation linking the subject with the research, and the subject's wishes will govern; or

(2) That the research presents no more than minimal risk of harm to subjects and involves no procedures for which written consent is normally required outside of the research context.

In cases in which the documentation requirement is waived, the IRB may require the investigator to provide subjects with a written statement regarding the research.

(Approved by the Office of Management and Budget under Control Number 0990–0260.)

[56 FR 28012, 28022, June 18, 1991, as amended at 70 FR 36328, June 23, 2005]

§ 11.118 Applications and proposals lacking definite plans for involvement of human subjects.

Certain types of applications for grants, cooperative agreements, or contracts are submitted to departments or agencies with the knowledge that subjects may be involved within the period of support, but definite plans would not normally be set forth in the application or proposal. These include activities such as institutional type grants when selection of specific projects is the institution's responsibility; research training grants in which the activities involving subjects remain to be selected; and projects in which human subjects' involvement will depend upon completion of instruments, prior animal studies, or purification of compounds. These applications need not be reviewed by an IRB before an award may be made. However, except for research exempted or waived under §11.101 (b) or (i), no human subjects may be involved in any project supported by these awards until the project has been reviewed and approved by the IRB, as provided in this policy, and certification submitted, by the institution, to the department or agency.

§ 11.119 Research undertaken without the intention of involving human subjects.

In the event research is undertaken without the intention of involving human subjects, but it is later proposed to involve human subjects in the research, the research shall first be reviewed and approved by an IRB, as provided in this policy, a certification submitted, by the institution, to the department or agency, and final approval given to the proposed change by the department or agency.

§ 11.120 Evaluation and disposition of applications and proposals for research to be conducted or supported by a Federal Department or Agency.

The department or agency head will evaluate all applications and proposals involving human subjects submitted to the department or agency through such officers and employees of the department or agency and such experts and consultants as the department or agency head determines to be appropriate. This evaluation will take into consideration the risks to the subjects, the adequacy of protection against these risks, the potential benefits of the research to the subjects and others, and the importance of the knowledge gained or to be gained.

(b) On the basis of this evaluation, the department or agency head may approve or disapprove the application or proposal, or enter into negotiations to develop an approvable one.

§ 11.121 [Reserved]

§ 11.122 Use of Federal funds.

Federal funds administered by a department or agency may not be expended for research involving human subjects unless the requirements of this policy have been satisfied.

§ 11.123 Early termination of research support: Evaluation of applications and proposals.

(a) The department or agency head may require that department or agency support for any project be terminated or suspended in the manner prescribed in applicable program requirements, when the department or agency head finds an institution has materially failed to comply with the terms of this policy.

(b) In making decisions about supporting or approving applications or proposals covered by this policy the department or agency head may take into account, in addition to all other eligibility requirements and program criteria, factors such as whether the applicant has been subject to a termination or suspension under paragarph (a) of this section and whether the applicant or the person or persons who would direct or has/have directed the scientific and technical aspects of an activity has/have, in the judgment of the department or agency head, materially failed to discharge responsibility for the protection of the rights and welfare of human subjects (whether or not the research was subject to Federal regulation).

§ 11.124 Conditions.

With respect to any research project or any class of research projects the department or agency head may impose additional conditions prior to or at the time of approval when in the judgment of the department or agency head additional conditions are necessary for the protection of human subjects.

PART 15—PROTECTION OF SENSITIVE SECURITY INFORMATION

Sec.

15.1 Scope.
15.3 Terms used in this part.
15.5 Sensitive security information.
15.7 Covered persons.
15.9 Restrictions on the disclosure of SSI.
15.11 Persons with a need to know.
15.13 Marking SSI.
15.15 SSI disclosed by DOT.
15.17 Consequences of unauthorized disclosure of SSI.
15.19 Destruction of SSI.

AUTHORITY: 49 U.S.C. 40119.

SOURCE: 69 FR 28078, May 18, 2004, unless otherwise noted.

§ 15.1 Scope.

(a) *Applicability.* This part governs the maintenance, safeguarding, and disclosure of records and information that the Secretary of DOT has determined to be Sensitive Security Information, as defined in §15.5. This part does not apply to the maintenance, safeguarding, or disclosure of classified national security information, as defined by Executive Order 12968, or to other sensitive unclassified information that is not SSI, but that nonetheless may be exempt from public disclosure under the Freedom of Information Act. In addition, in the case of information that has been designated as critical infrastructure information under section 214 of the Homeland Security Act, the receipt, maintenance, or disclosure of such information by a Federal agency or employee is governed by section 214 and any implementing regulations, not by this part.

(b) *Delegation.* The authority of the Secretary under this part may be further delegated within DOT.

§ 15.3 Terms used in this part.

In addition to the terms in §15.3 of this chapter, the following terms apply in this part:

Administrator means the Under Secretary of Transportation for Security referred to in 49 U.S.C. 114(b), or his or her designee.

Coast Guard means the United States Coast Guard.

Covered person means any organization, entity, individual, or other person described in §15.7. In the case of an individual, *covered person* includes any individual applying for employment in a position that would be a covered person, or in training for such a position, regardless of whether that individual is receiving a wage, salary, or other form of payment. *Covered person* includes a person applying for certification or other form of approval that, if granted, would make the person a covered person described in §15.7.

DHS means the Department of Homeland Security and any directorate, bureau, or other component within the Department of Homeland Security, including the United States Coast Guard.

DOT means the Department of Transportation and any operating administration, entity, or office within the Department of Transportation, including the Saint Lawrence Seaway Development Corporation and the Bureau of Transportation Statistics.

Federal Flight Deck Officer means a pilot participating in the Federal Flight Deck Officer Program under 49 U.S.C. 44921 and implementing regulations.

Maritime facility means any facility as defined in 33 CFR part 101.

Record includes any means by which information is preserved, irrespective of format, including a book, paper, drawing, map, recording, tape, film, photograph, machine-readable material, and any information stored in an electronic format. The term *record* also includes any draft, proposed, or recommended change to any record.

Security contingency plan means a plan detailing response procedures to address a transportation security incident, threat assessment, or specific threat against transportation, including details of preparation, response,

mitigation, recovery, and reconstitution procedures, continuity of government, continuity of transportation operations, and crisis management.

Security program means a program or plan and any amendments developed for the security of the following, including any comments, instructions, or implementing guidance:

(1) An airport, aircraft, or aviation cargo operation;

(2) A maritime facility, vessel, or port area; or

(3) A transportation-related automated system or network for information processing, control, and communications.

Security screening means evaluating a person or property to determine whether either poses a threat to security.

SSI means sensitive security information, as described in §15.5.

Threat image projection system means an evaluation tool that involves periodic presentation of fictional threat images to operators and is used in connection with x-ray or explosives detection systems equipment.

TSA means the Transportation Security Administration.

Vulnerability assessment means any review, audit, or other examination of the security of a transportation infrastructure asset; airport; maritime facility, port area, vessel, aircraft, train, commercial motor vehicle, or pipeline, or a transportation-related automated system or network, to determine its vulnerability to unlawful interference, whether during the conception, planning, design, construction, operation, or decommissioning phase. A *vulnerability assessment* may include proposed, recommended, or directed actions or countermeasures to address security concerns.

§ 15.5 Sensitive security information.

(a) *In general.* In accordance with 49 U.S.C. 40119(b)(1), SSI is information obtained or developed in the conduct of security activities, including research and development, the disclosure of which the Secretary of DOT has determined would—

(1) Constitute an unwarranted invasion of privacy (including, but not limited to, information contained in any personnel, medical, or similar file);

(2) Reveal trade secrets or privileged or confidential information obtained from any person; or

(3) Be detrimental to transportation safety.

(b) *Information constituting SSI.* Except as otherwise provided in writing by the Secretary of DOT in the interest of public safety or in furtherance of transportation security, the following information, and records containing such information, constitute SSI:

(1) *Security programs and contingency plans.* Any security program or security contingency plan issued, established, required, received, or approved by DOT or DHS, including—

(i) Any aircraft operator or airport operator security program or security contingency plan under this chapter;

(ii) Any vessel, maritime facility, or port area security plan required or directed under Federal law;

(iii) Any national or area security plan prepared under 46 U.S.C. 70103; and

(iv) Any security incident response plan established under 46 U.S.C. 70104.

(2) *Security Directives.* Any Security Directive or order—

(i) Issued by TSA under 49 CFR 1542.303, 1544.305, or other authority;

(ii) Issued by the Coast Guard under the Maritime Transportation Security Act, 33 CFR part 6, or 33 U.S.C. 1221 *et seq.* related to maritime security; or

(iii) Any comments, instructions, and implementing guidance pertaining thereto.

(3) *Information Circulars.* Any notice issued by DHS or DOT regarding a threat to aviation or maritime transportation, including any—

(i) Information Circular issued by TSA under 49 CFR 1542.303 or 1544.305, or other authority; and

(ii) Navigation or Vessel Inspection Circular issued by the Coast Guard related to maritime security.

(4) *Performance specifications.* Any performance specification and any description of a test object or test procedure, for—

(i) Any device used by the Federal government or any other person pursuant to any aviation or maritime transportation security requirements of Federal law for the detection of any weapon, explosive, incendiary, or destructive device or substance; and

(ii) Any communications equipment used by the Federal government or any other person in carrying out or complying with any aviation or maritime transportation security requirements of Federal law.

(5) *Vulnerability assessments.* Any vulnerability assessment directed, created, held, funded, or approved by the DOT, DHS, or that will be provided to DOT or DHS in support of a Federal security program.

(6) *Security inspection or investigative information.* (i) Details of any security inspection or investigation of an alleged violation of aviation or maritime transportation security requirements of Federal law that could reveal a security vulnerability, including the identity of the Federal special agent or other Federal employee who conducted the inspection or audit.

(ii) In the case of inspections or investigations performed by TSA, this includes the following information as to events that occurred within 12 months of the date of release of the information: the name of the airport where a violation occurred, the airport identifier in the case number, a description of the violation, the regulation allegedly violated, and the identity of any aircraft operator in connection with specific locations or specific security procedures. Such information will be released after the relevant 12-month period, except that TSA will not release the specific gate or other location on an airport where an event occurred, regardless of the amount of time that has passed since its occurrence. During the period within 12 months of the date of release of the information, TSA may release summaries of an aircraft operator's, but not an airport operator's, total security violations in a specified time range without identifying specific violations or locations. Summaries may include total enforcement actions, total proposed civil penalty amounts, number of cases opened, number of cases referred to TSA or FAA counsel for legal enforcement action, and number of cases closed.

(7) *Threat information.* Any information held by the Federal government concerning threats against transportation or transportation systems and sources and methods used to gather or develop threat information, including threats against cyber infrastructure.

(8) *Security measures.* Specific details of aviation or maritime transportation security measures, both operational and technical, whether applied directly by the Federal government or another person, including—

(i) Security measures or protocols recommended by the Federal government;

(ii) Information concerning the deployments, numbers, and operations of Coast Guard personnel engaged in maritime security duties and Federal Air Marshals, to the extent it is not classified national security information; and

(iii) Information concerning the deployments and operations of Federal Flight Deck Officers, and numbers of Federal Flight Deck Officers aggregated by aircraft operator.

(9) *Security screening information.* The following information regarding security screening under aviation or maritime transportation security requirements of Federal law:

(i) Any procedures, including selection criteria and any comments, instructions, and implementing guidance pertaining thereto, for screening of persons, accessible property, checked baggage, U.S. mail, stores, and cargo, that is conducted by the Federal government or any other authorized person.

(ii) Information and sources of information used by a passenger or property screening program or system, including an automated screening system.

(iii) Detailed information about the locations at which particular screening methods or equipment are used, only if determined by TSA to be SSI.

(iv) Any security screener test and scores of such tests.

(v) Performance or testing data from security equipment or screening systems.

(vi) Any electronic image shown on any screening equipment monitor, including threat images and descriptions of threat images for threat image projection systems.

(10) *Security training materials.* Records created or obtained for the purpose of training persons employed by, contracted with, or acting for the Federal government or another person

to carry out any aviation or maritime transportation security measures required or recommended by DHS or DOT.

(11) *Identifying information of certain transportation security personnel.* (i) Lists of the names or other identifying information that identify persons as—

(A) Having unescorted access to a secure area of an airport or a secure or restricted area of a maritime facility, port area, or vessel or;

(B) Holding a position as a security screener employed by or under contract with the Federal government pursuant to aviation or maritime transportation security requirements of Federal law, where such lists are aggregated by airport;

(C) Holding a position with the Coast Guard responsible for conducting vulnerability assessments, security boardings, or engaged in operations to enforce maritime security requirements or conduct force protection;

(D) Holding a position as a Federal Air Marshal; or

(ii) The name or other identifying information that identifies a person as a current, former, or applicant for Federal Flight Deck Officer.

(12) *Critical aviation or maritime infrastructure asset information.* Any list identifying systems or assets, whether physical or virtual, so vital to the aviation or maritime transportation system that the incapacity or destruction of such assets would have a debilitating impact on transportation security, if the list is—

(i) Prepared by DHS or DOT; or

(ii) Prepared by a State or local government agency and submitted by the agency to DHS or DOT.

(13) *Systems security information.* Any information involving the security of operational or administrative data systems operated by the Federal government that have been identified by the DOT or DHS as critical to aviation or maritime transportation safety or security, including automated information security procedures and systems, security inspections, and vulnerability information concerning those systems.

(14) *Confidential business information.* (i) Solicited or unsolicited proposals received by DHS or DOT, and negotiations arising therefrom, to perform work pursuant to a grant, contract, cooperative agreement, or other transaction, but only to the extent that the subject matter of the proposal relates to aviation or maritime transportation security measures;

(ii) Trade secret information, including information required or requested by regulation or Security Directive, obtained by DHS or DOT in carrying out aviation or maritime transportation security responsibilities; and

(iii) Commercial or financial information, including information required or requested by regulation or Security Directive, obtained by DHS or DOT in carrying out aviation or maritime transportation security responsibilities, but only if the source of the information does not customarily disclose it to the public.

(15) *Research and development.* Information obtained or developed in the conduct of research related to aviation or maritime transportation security activities, where such research is approved, accepted, funded, recommended, or directed by the DHS or DOT, including research results.

(16) *Other information.* Any information not otherwise described in this section that TSA determines is SSI under 49 U.S.C. 114(s) or that the Secretary of DOT determines is SSI under 49 U.S.C. 40119. Upon the request of another Federal agency, the Secretary of DOT may designate as SSI information not otherwise described in this section.

(c) *Loss of SSI designation.* The Secretary of DOT may determine in writing that information or records described in paragraph (b) of this section do not constitute SSI because they no longer meet the criteria set forth in paragraph (a) of this section.

§ 15.7 Covered persons.

Persons subject to the requirements of part 15 are:

(a) Each airport operator and aircraft operator subject to the requirements of Subchapter C of this title.

(b) Each indirect air carrier, as defined in 49 CFR 1540.5.

(c) Each owner, charterer, or operator of a vessel, including foreign vessel owners, charterers, and operators, required to have a security plan under Federal or International law.

(d) Each owner or operator of a maritime facility required to have a security plan under the Maritime Transportation Security Act, (Pub. L. 107–295), 46 U.S.C. 70101 *et seq.*, 33 CFR part 6, or 33 U.S.C. 1221 *et seq.*

(e) Each person performing the function of a computer reservation system or global distribution system for airline passenger information.

(f) Each person participating in a national or area security committee established under 46 U.S.C. 70112, or a port security committee.

(g) Each industry trade association that represents covered persons and has entered into a non-disclosure agreement with the DHS or DOT.

(h) DHS and DOT.

(i) Each person conducting research and development activities that relate to aviation or maritime transportation security and are approved, accepted, funded, recommended, or directed by DHS or DOT.

(j) Each person who has access to SSI, as specified in §15.11.

(k) Each person employed by, contracted to, or acting for a covered person, including a grantee of DHS or DOT, and including a person formerly in such position.

(l) Each person for which a vulnerability assessment has been directed, created, held, funded, or approved by the DOT, DHS, or that has prepared a vulnerability assessment that will be provided to DOT or DHS in support of a Federal security program.

(m) Each person receiving SSI under §1520.15(d) or (e).

§15.9 Restrictions on the disclosure of SSI.

(a) *Duty to protect information.* A covered person must—

(1) Take reasonable steps to safeguard SSI in that person's possession or control from unauthorized disclosure. When a person is not in physical possession of SSI, the person must store it a secure container, such as a locked desk or file cabinet or in a locked room.

(2) Disclose, or otherwise provide access to, SSI only to covered persons who have a need to know, unless otherwise authorized in writing by TSA, the Coast Guard, or the Secretary of DOT.

(3) Refer requests by other persons for SSI to TSA or the applicable component or agency within DOT or DHS.

(4) Mark SSI as specified in §15.13.

(5) Dispose of SSI as specified in §15.19.

(b) *Unmarked SSI.* If a covered person receives a record containing SSI that is not marked as specified in §1520.13, the covered person must—

(1) Mark the record as specified in §15.13; and

(2) Inform the sender of the record that the record must be marked as specified in §15.13.

(c) *Duty to report unauthorized disclosure.* When a covered person becomes aware that SSI has been released to unauthorized persons, the covered person must promptly inform TSA or the applicable DOT or DHS component or agency.

(d) *Additional requirements for critical infrastructure information.* In the case of information that is both SSI and has been designated as critical infrastructure information under section 214 of the Homeland Security Act, any covered person who is a Federal employee in possession of such information must comply with the disclosure restrictions and other requirements applicable to such information under section 214 and any implementing regulations.

§15.11 Persons with a need to know.

(a) *In general.* A person has a need to know SSI in each of the following circumstances:

(1) When the person requires access to specific SSI to carry out transportation security activities approved, accepted, funded, recommended, or directed by DHS or DOT.

(2) When the person is in training to carry out transportation security activities approved, accepted, funded, recommended, or directed by DHS or DOT.

(3) When the information is necessary for the person to supervise or otherwise manage individuals carrying out transportation security activities approved, accepted, funded, recommended, or directed by the DHS or DOT.

(4) When the person needs the information to provide technical or legal advice to a covered person regarding

transportation security requirements of Federal law.

(5) When the person needs the information to represent a covered person in connection with any judicial or administrative proceeding regarding those requirements.

(b) *Federal employees, contractors, and grantees.* (1) A Federal employee has a need to know SSI if access to the information is necessary for performance of the employee's official duties.

(2) A person acting in the performance of a contract with or grant from DHS or DOT has a need to know SSI if access to the information is necessary to performance of the contract or grant.

(c) *Background check.* The Secretary of DOT may make an individual's access to the SSI contingent upon satisfactory completion of a security background check and the imposition of procedures and requirements for safeguarding SSI that are satisfactory to the Secretary.

(d) *Need to know further limited by the DHS or DOT.* For some specific SSI, DHS or DOT may make a finding that only specific persons or classes of persons have a need to know.

[69 FR 28078, May 18, 2004, as amended at 70 FR 1381, Jan. 7, 2005]

§ 15.13 Marking SSI.

(a) *Marking of paper records.* In the case of paper records containing SSI, a covered person must mark the record by placing the protective marking conspicuously on the top, and the distribution limitation statement on the bottom, of—

(1) The outside of any front and back cover, including a binder cover or folder, if the document has a front and back cover;

(2) Any title page; and

(3) Each page of the document.

(b) *Protective marking.* The protective marking is: SENSITIVE SECURITY INFORMATION.

(c) *Distribution limitation statement.* The distribution limitation statement is:

WARNING: This record contains Sensitive Security Information that is controlled under 49 CFR parts 15 and 1520. No part of this record may be disclosed to persons without a ''need to know'', as defined in 49 CFR parts 15 and 1520, except with the written permission of the Administrator of the Transportation Security Administration or the Secretary of Transportation. Unauthorized release may result in civil penalty or other action. For U.S. government agencies, public disclosure is governed by 5 U.S.C. 552 and 49 CFR parts 15 and 1520.

(d) *Other types of records.* In the case of non-paper records that contain SSI, including motion picture films, videotape recordings, audio recording, and electronic and magnetic records, a covered person must clearly and conspicuously mark the records with the protective marking and the distribution limitation statement such that the viewer or listener is reasonably likely to see or hear them when obtaining access to the contents of the record.

§ 15.15 SSI disclosed by DOT.

(a) *In general.* Except as otherwise provided in this section, and notwithstanding the Freedom of Information Act (5 U.S.C. 552), the Privacy Act (5 U.S.C. 552a), and other laws, records containing SSI are not available for public inspection or copying, nor does DOT release such records to persons without a need to know.

(b) *Disclosure under the Freedom of Information Act and the Privacy Act.* If a record contains both SSI and information that is not SSI, DOT, on a proper Freedom of Information Act or Privacy Act request, may disclose the record with the SSI redacted, provided the record is not otherwise exempt from disclosure under the Freedom of Information Act or Privacy Act.

(c) *Disclosures to committees of Congress and the General Accounting Office.* Nothing in this part precludes DOT from disclosing SSI to a committee of Congress authorized to have the information or to the Comptroller General, or to any authorized representative of the Comptroller General.

(d) *Disclosure in enforcement proceedings*—(1) *In general.* The Secretary of DOT may provide SSI to a person in the context of an administrative enforcement proceeding when, in the sole discretion of the Secretary, access to the SSI is necessary for the person to prepare a response to allegations contained in a legal enforcement action document issued by DOT.

(2) *Security background check.* Prior to providing SSI to a person under paragraph (d)(1) of this section, the Secretary of DOT may require the individual or, in the case of an entity, the individuals representing the entity, and their counsel, to undergo and satisfy, in the judgment of the Secretary of DOT, a security background check.

(e) *Other conditional disclosure.* The Secretary of DOT may authorize a conditional disclosure of specific records or information that constitute SSI upon the written determination by the Secretary that disclosure of such records or information, subject to such limitations and restrictions as the Secretary may prescribe, would not be detrimental to transportation safety.

(f) *Obligation to protect information.* When an individual receives SSI pursuant to paragraph (d) or (e) of this section that individual becomes a covered person under §15.7 and is subject to the obligations of a covered person under this part.

(g) *No release under FOIA.* When DOT discloses SSI pursuant to paragraphs (b) through (e) of this section, DOT makes the disclosure for the sole purpose described in that paragraph. Such disclosure is not a public release of information under the Freedom of Information Act.

(h) *Disclosure of Critical Infrastructure Information.* Disclosure of information that is both SSI and has been designated as critical infrastructure information under section 214 of the Homeland Security Act is governed solely by the requirements of section 214 and any implementing regulations.

§15.17 Consequences of unauthorized disclosure of SSI.

Violation of this part is grounds for a civil penalty and other enforcement or corrective action by DOT, and appropriate personnel actions for Federal employees. Corrective action may include issuance of an order requiring retrieval of SSI to remedy unauthorized disclosure or an order to cease future unauthorized disclosure.

§15.19 Destruction of SSI.

(a) *DOT.* Subject to the requirements of the Federal Records Act (5 U.S.C. 105), including the duty to preserve records containing documentation of a Federal agency's policies, decisions, and essential transactions, DOT destroys SSI when no longer needed to carry out the agency's function.

(b) *Other covered persons*—(1) *In general.* A covered person must destroy SSI completely to preclude recognition or reconstruction of the information when the covered person no longer needs the SSI to carry out transportation security measures.

(2) *Exception.* Paragraph (b)(1) of this section does not require a State or local government agency to destroy information that the agency is required to preserve under State or local law.

PART 17—INTERGOVERNMENTAL REVIEW OF DEPARTMENT OF TRANSPORTATION PROGRAMS AND ACTIVITIES

Sec.

17.1 What is the purpose of these regulations?
17.2 What definitions apply to these regulations?
17.3 What programs and activities of the Department are subject to these regulations?
17.4 [Reserved]
17.5 What is the Secretary's obligation with respect to Federal interagency coordination?
17.6 What procedures apply to the selection of programs and activities under these regulations?
17.7 How does the Secretary communicate with state and local officials concerning the Department's programs and activities?
17.8 How does the secretary provide states an opportunity to comment on proposed Federal financial assistance and direct Federal development?
17.9 How does the Secretary receive and respond to comments?
17.10 How does the Secretary make efforts to accommodate intergovernmental concerns?
17.11 What are the Secretary's obligations in interstate situations?
17.12 How may a state simplify, consolidate, or substitute federally required state plans?
17.13 May the Secretary waive any provision of these regulations?

AUTHORITY: Executive Order 12372, July 14, 1982 (47 FR 30959), as amended April 8, 1983 (48 FR 15887): sec. 401 of the Intergovernmental Cooperation Act of 1968, as amended (31 U.S.C. 6506); sec. 204 of the Demonstration

Cities and Metropolitan Development Act of 1966, as amended (42 U.S.C. 3334).

SOURCE: 48 FR 29272, June 24, 1983, unless otherwise noted.

§ 17.1 What is the purpose of these regulations?

(a) The regulations in this part implement Executive Order 12372, ''Intergovernmental Review of Federal Programs,'' issued July 14, 1982, and amended on April 8, 1983. These regulations also implement applicable provisions of section 401 of the Intergovernmental Cooperation Act of 1968 and section 204 of the Demonstration Cities and Metropolitan Development Act of 1966.

(b) These regulations are intended to foster an intergovernmental partnership and a strengthened Federalism by relying on state processes and on state, areawide, regional and local coordination for review of proposed Federal financial assistance and direct Federal development.

(c) These regulations are intended to aid the internal management of the Department, and are not intended to create any right or benefit enforceable at law by a party against the Department or its officers.

§ 17.2 What definitions apply to these regulations?

Department means the U.S. Department of Transportation.

Order means Executive Order 12372, issued July 14, 1982, and amended April 8, 1983, and titled ''Intergovernmental Review of Federal Programs.''

Secretary means the Secretary of the U.S. Department of Transportation or an official or employee of the Department acting for the Secretary under a delegation of authority.

State means any of the 50 states, the District of Columbia, the Commonwealth of Puerto Rico, the Commonwealth of the Northern Mariana Islands, Guam, American Samoa, the U.S. Virgin Islands, or the Trust Territory of the Pacific Islands.

§ 17.3 What programs and activities of the Department are subject to these regulations?

The Secretary publishes in the FEDERAL REGISTER a list of the Department's programs and activities that are subject to these regulations and identifies which of these are subject to the requirements of section 204 of the Demonstration Cities and Metropolitan Development Act.

§ 17.4 [Reserved]

§ 17.5 What is the Secretary's obligation with respect to Federal interagency coordination?

The Secretary, to the extent practicable, consults with and seeks advice from all other substantially affected Federal departments and agencies in an effort to assure full coordination between such agencies and the Department regarding programs and activities covered under these regulations.

§ 17.6 What procedures apply to the selection of programs and activities under these regulations?

(a) A state may select any program or activity published in the FEDERAL REGISTER in accordance with § 17.3 of this part for intergovernmental review under these regulations. Each state, before selecting programs and activities shall consult with local elected officials.

(b) Each state that adopts a process shall notify the Secretary of the Department's programs and activities selected for that process.

(c) A state may notify the Secretary of changes in its selections at any time. For each change, the state shall submit to the Secretary an assurance that the state has consulted with elected local elected officials regarding the change. The Department may establish deadlines by which states are required to inform the Secretary of changes in their program selections.

(d) The Secretary uses a state's process as soon as feasible, depending on individual programs, and activities, after the Secretary is notified of its selections.

§ 17.7 How does the Secretary communicate with state and local officials concerning the Department's programs and activities?

(a) For those programs and activities covered by a state process under § 17.6, the Secretary, to the extent permitted by law:

(1) Uses the state process to determine views of state and local elected officials; and,

(2) Communicates with state and local elected officials, through the state process, as early in a program planning cycle as is reasonably feasible to explain specific plans and actions.

(b) The Secretary provides notice to directly affected state, areawide, regional, and local entities in a state of proposed Federal financial assistance or direct Federal development if:

(1) The state has not adopted a process under the Order; or

(2) The assistance or development involves a program or activity not selected for the state process.

This notice may be made by publication in the FEDERAL REGISTER or other appropriate means, which the Department in its discretion deems appropriate.

§ 17.8 How does the Secretary provide states an opportunity to comment on proposed Federal financial assistance and direct Federal development?

(a) Except in unusual circumstances, the Secretary gives state processes or state, areawide, regional and local officials and entities at least:

(1) [Reserved]

(2) 60 days from the date established by the Secretary to comment on proposed direct Federal development or Federal financial assistance.

(b) This section also applies to comments in cases in which the review, coordination, and communication with the Department have been delegated.

(c) Applicants for programs and activities subject to section 204 of the Demonstration Cities and Metropolitan Act shall allow areawide agencies a 60-day opportunity for review and comment.

§ 17.9 How does the Secretary receive and respond to comments?

(a) The Secretary follows the procedures in § 17.10 if:

(1) A state office or official is designated to act as a single point of contact between a state process and all federal agencies, and

(2) That office or official transmits a state process recommendation for a program selected under § 17.6.

(b)(1) The single point of contact is not obligated to transmit comments from state, areawide, regional or local officials and entities where there is no state process recommendation.

(2) If a state process recommendation is transmitted by a single point of contact, all comments from state, areawide, regional, and local officials and entities that differ from it must also be transmitted.

(c) If a state has not established a process, or is unable to submit a state process recommendation, state, areawide, regional and local officials and entities may submit comments either to the applicant or to the Department.

(d) If a program or activity is not selected for a state process, state, areawide, regional and local officials and entities may submit comments either to the applicant or to the Department. In addition, if a state process recommendation for a nonselected program or activity is transmitted to the Department by the single point of contact, the Secretary follows the procedures of § 17.10 of this part.

(e) The Secretary considers comments which do not constitute a state process recommendation submitted under these regulations and for which the Secretary is not required to apply the procedures of § 17.10 of this part, when such comments are provided by a single point of contact, by the applicant, or directly to the Department by a commenting party.

§ 17.10 How does the Secretary make efforts to accommodate intergovernmental concerns?

(a) If a state process provides a state process recommendation to the Department through its single point of contact, the Secretary either:

(1) Accepts the recommendation;

(2) Reaches a mutually agreeable solution with the state process; or

(3) Provides the single point of contact with a written explanation of the decision, in such form as the Secretary

in his or her discretion deems appropriate. The Secretary may also supplement the written explanation by providing the explanation to the single point of contact by telephone, other telecommunication, or other means.

(b) In any explanation under paragraph (a)(3) of this section, the Secretary informs the single point of contact that:

(1) The Department will not implement its decision for at least ten days after the single point of contact receives the explanation; or

(2) The Secretary has reviewed the decision and determined that, because of unusual circumstances, the waiting period of at least ten days is not feasible.

(c) For purposes of computing the waiting period under paragraph (b)(1) of this section, a single point of contact is presumed to have received written notification 5 days after the date of mailing of such notification.

§ 17.11 What are the Secretary's obligations in interstate situations?

(a) The Secretary is responsible for:

(1) Identifying proposed federal financial assistance and direct federal development that have an impact on interstate areas;

(2) Notifying appropriate officials and entities in states which have adopted a process and which select the Department's program or activity.

(3) Making efforts to identify and notify the affected state, areawide, regional, and local officials and entities in those states that have not adopted a process under the Order or do not select the Department's program or activity;

(4) Responding pursuant to §17.10 of this part if the Secretary receives a recommendation from a designated areawide agency transmitted by a single point of contact, in cases in which the review, coordination, and communication with the Department have been delegated.

(b) The Secretary uses the procedures in §17.10 if a state process provides a state process recommendation to the Department through a single point of contact.

§ 17.12 How may a state simplify, consolidate, or substitute federally required state plans?

(a) As used in this section:

(1) *Simplify* means that a state may develop its own format, choose its own submission date, and select the planning period for a state plan.

(2) *Consolidate* means that a state may meet statutory and regulatory requirements by combining two or more plans into one document and that the state can select the format, submission date, and planning period for the consolidated plan.

(3) *Substitute* means that a state may use a plan or other document that it has developed for its own purposes to meet Federal requirements.

(b) If not inconsistent with law, a state may decide to try to simplify, consolidate, or substitute federally required state plans without prior approval by the Secretary.

(c) The Secretary reviews each state plan that a state has simplified, consolidated, or substituted and accepts the plan only if its contents meet federal requirements.

§ 17.13 May the Secretary waive any provision of these regulations?

In an emergency, the Secretary may waive any provision of these regulations.

PART 18—UNIFORM ADMINISTRATIVE REQUIREMENTS FOR GRANTS AND COOPERATIVE AGREEMENTS TO STATE AND LOCAL GOVERNMENTS

Subpart A—General

Sec.

18.1 Purpose and scope of this part.
18.2 Scope of subpart.
18.3 Definitions.
18.4 Applicability.
18.5 Effect on other issuances.
18.6 Additions and exceptions.

Subpart B—Pre-Award Requirements

18.10 Forms for applying for grants.
18.11 State plans.
18.12 Special grant or subgrant conditions for ''high risk'' grantees.

Subpart C—Post-Award Requirements

FINANCIAL ADMINISTRATION

18.20 Standards for financial management systems.
18.21 Payment.
18.22 Allowable costs.
18.23 Period of availability of funds.
18.24 Matching or cost sharing.
18.25 Program income.
18.26 Non-Federal audits.

CHANGES, PROPERTY, AND SUBAWARDS

18.30 Changes.
18.31 Real property.
18.32 Equipment.
18.33 Supplies.
18.34 Copyrights.
18.35 Subawards to debarred and suspended parties.
18.36 Procurement.
18.37 Subgrants.

REPORTS, RECORDS, RETENTION, AND ENFORCEMENT

18.40 Monitoring and reporting program performance.
18.41 Financial reporting.
18.42 Retention and access requirements for records.
18.43 Enforcememt.
18.44 Termination for convenience.

Subpart D—After-The-Grant Requirements

18.50 Closeout.
18.51 Later disallowances and adjustments.
18.52 Collection of amounts due.

Subpart E—Entitlements [Reserved]

AUTHORITY: 49 U.S.C. 322(a).

SOURCE: 53 FR 8086, 8087, Mar. 11, 1988, unless otherwise noted.

Subpart A—General

§ 18.1 Purpose and scope of this part.

This part establishes uniform administrative rules for Federal grants and cooperative agreements and subawards to State, local and Indian tribal governments.

§ 18.2 Scope of subpart.

This subpart contains general rules pertaining to this part and procedures for control of exceptions from this part.

§ 18.3 Definitions.

As used in this part:

Accrued expenditures mean the charges incurred by the grantee during a given period requiring the provision of funds for: (1) Goods and other tangible property received; (2) services performed by employees, contractors, subgrantees, subcontractors, and other payees; and (3) other amounts becoming owed under programs for which no current services or performance is required, such as annuities, insurance claims, and other benefit payments.

Accrued income means the sum of: (1) Earnings during a given period from services performed by the grantee and goods and other tangible property delivered to purchasers, and (2) amounts becoming owed to the grantee for which no current services or performance is required by the grantee.

Acquisition cost of an item of purchased equipment means the net invoice unit price of the property including the cost of modifications, attachments, accessories, or auxiliary apparatus necessary to make the property usable for the purpose for which it was acquired. Other charges such as the cost of installation, transportation, taxes, duty or protective in-transit insurance, shall be included or excluded from the unit acquisition cost in accordance with the grantee's regular accounting practices.

Administrative requirements mean those matters common to grants in general, such as financial management, kinds and frequency of reports, and retention of records. These are distinguished from ''programmatic'' requirements, which concern matters that can be treated only on a program-by-program or grant-by-grant basis, such as kinds of activities that can be supported by grants under a particular program.

Awarding agency means (1) with respect to a grant, the Federal agency, and (2) with respect to a subgrant, the party that awarded the subgrant.

Cash contributions means the grantee's cash outlay, including the outlay of money contributed to the grantee or subgrantee by other public agencies and institutions, and private organizations and individuals. When authorized by Federal legislation, Federal funds

received from other assistance agreements may be considered as grantee or subgrantee cash contributions.

Contract means (except as used in the definitions for ''grant'' and ''subgrant'' in this section and except where qualified by ''Federal'') a procurement contract under a grant or subgrant, and means a procurement subcontract under a contract.

Cost sharing or matching means the value of the third party in-kind contributions and the portion of the costs of a federally assisted project or program not borne by the Federal Government.

Cost-type contract means a contract or subcontract under a grant in which the contractor or subcontractor is paid on the basis of the costs it incurs, with or without a fee.

Equipment means tangible, nonexpendable, personal property having a useful life of more than one year and an acquisition cost of $5,000 or more per unit. A grantee may use its own definition of equipment provided that such definition would at least include all equipment defined above.

Expenditure report means: (1) For nonconstruction grants, the SF–269 ''Financial Status Report'' (or other equivalent report); (2) for construction grants, the SF–271 ''Outlay Report and Request for Reimbursement'' (or other equivalent report).

Federally recognized Indian tribal government means the governing body or a governmental agency of any Indian tribe, band, nation, or other organized group or community (including any Native village as defined in section 3 of the Alaska Native Claims Settlement Act, 85 Stat 688) certified by the Secretary of the Interior as eligible for the special programs and services provided by him through the Bureau of Indian Affairs.

Government means a State or local government or a federally recognized Indian tribal government.

Grant means an award of financial assistance, including cooperative agreements, in the form of money, or property in lieu of money, by the Federal Government to an eligible grantee. The term does not include technical assistance which provides services instead of money, or other assistance in the form of revenue sharing, loans, loan guarantees, interest subsidies, insurance, or direct appropriations. Also, the term does not include assistance, such as a fellowship or other lump sum award, which the grantee is not required to account for.

Grantee means the government to which a grant is awarded and which is accountable for the use of the funds provided. The grantee is the entire legal entity even if only a particular component of the entity is designated in the grant award document.

Local government means a county, municipality, city, town, township, local public authority (including any public and Indian housing agency under the United States Housing Act of 1937) school district, special district, intrastate district, council of governments (whether or not incorporated as a nonprofit corporation under state law), any other regional or interstate government entity, or any agency or instrumentality of a local government.

Obligations means the amounts of orders placed, contracts and subgrants awarded, goods and services received, and similar transactions during a given period that will require payment by the grantee during the same or a future period.

OMB means the United States Office of Management and Budget.

Outlays (expenditures) mean charges made to the project or program. They may be reported on a cash or accrual basis. For reports prepared on a cash basis, outlays are the sum of actual cash disbursement for direct charges for goods and services, the amount of indirect expense incurred, the value of in-kind contributions applied, and the amount of cash advances and payments made to contractors and subgrantees. For reports prepared on an accrued expenditure basis, outlays are the sum of actual cash disbursements, the amount of indirect expense incurred, the value of inkind contributions applied, and the new increase (or decrease) in the amounts owed by the grantee for goods and other property received, for services performed by employees, contractors, subgrantees, subcontractors, and other payees, and other amounts becoming owed under programs for which no current services or performance are

required, such as annuities, insurance claims, and other benefit payments.

Percentage of completion method refers to a system under which payments are made for construction work according to the percentage of completion of the work, rather than to the grantee's cost incurred.

Prior approval means documentation evidencing consent prior to incurring specific cost.

Real property means land, including land improvements, structures and appurtenances thereto, excluding movable machinery and equipment.

Share, when referring to the awarding agency's portion of real property, equipment or supplies, means the same percentage as the awarding agency's portion of the acquiring party's total costs under the grant to which the acquisition costs under the grant to which the acquisition cost of the property was charged. Only costs are to be counted—not the value of third-party in-kind contributions.

State means any of the several States of the United States, the District of Columbia, the Commonwealth of Puerto Rico, any territory or possession of the United States, or any agency or instrumentality of a State exclusive of local governments. The term does not include any public and Indian housing agency under United States Housing Act of 1937.

Subgrant means an award of financial assistance in the form of money, or property in lieu of money, made under a grant by a grantee to an eligible subgrantee. The term includes financial assistance when provided by contractual legal agreement, but does not include procurement purchases, nor does it include any form of assistance which is excluded from the definition of ''grant'' in this part.

Subgrantee means the government or other legal entity to which a subgrant is awarded and which is accountable to the grantee for the use of the funds provided.

Supplies means all tangible personal property other than ''equipment'' as defined in this part.

Suspension means depending on the context, either (1) temporary withdrawal of the authority to obligate grant funds pending corrective action by the grantee or subgrantee or a decision to terminate the grant, or (2) an action taken by a suspending official in accordance with agency regulations implementing E.O. 12549 to immediately exclude a person from participating in grant transactions for a period, pending completion of an investigation and such legal or debarment proceedings as may ensue.

Termination means permanent withdrawal of the authority to obligate previously-awarded grant funds before that authority would otherwise expire. It also means the voluntary relinquishment of that authority by the grantee or subgrantee. ''Termination'' does not include: (1) Withdrawal of funds awarded on the basis of the grantee's underestimate of the unobligated balance in a prior period; (2) Withdrawal of the unobligated balance as of the expiration of a grant; (3) Refusal to extend a grant or award additional funds, to make a competing or noncompeting continuation, renewal, extension, or supplemental award; or (4) voiding of a grant upon determination that the award was obtained fraudulently, or was otherwise illegal or invalid from inception.

Terms of a grant or subgrant mean all requirements of the grant or subgrant, whether in statute, regulations, or the award document.

Third party in-kind contributions mean property or services which benefit a federally assisted project or program and which are contributed by non-Federal third parties without charge to the grantee, or a cost-type contractor under the grant agreement.

Unliquidated obligations for reports prepared on a cash basis mean the amount of obligations incurred by the grantee that has not been paid. For reports prepared on an accrued expenditure basis, they represent the amount of obligations incurred by the grantee for which an outlay has not been recorded.

Unobligated balance means the portion of the funds authorized by the Federal agency that has not been obligated by the grantee and is determined by deducting the cumulative obligations from the cumulative funds authorized.

§ 18.4 Applicability.

(a) *General.* Subparts A through D of this part apply to all grants and subgrants to governments, except where inconsistent with Federal statutes or with regulations authorized in accordance with the exception provision of § 18.6, or:

(1) Grants and subgrants to State and local institutions of higher education or State and local hospitals.

(2) The block grants authorized by the Omnibus Budget Reconciliation Act of 1981 (Community Services; Preventive Health and Health Services; Alcohol, Drug Abuse, and Mental Health Services; Maternal and Child Health Services; Social Services; Low-Income Home Energy Assistance; States' Program of Community Development Block Grants for Small Cities; and Elementary and Secondary Education other than programs administered by the Secretary of Education under title V, subtitle D, chapter 2, Section 583—the Secretary's discretionary grant program) and titles I-III of the Job Training Partnership Act of 1982 and under the Public Health Services Act (Section 1921), Alcohol and Drug Abuse Treatment and Rehabilitation Block Grant and part C of title V, Mental Health Service for the Homeless Block Grant).

(3) Entitlement grants to carry out the following programs of the Social Security Act:

(i) Aid to Needy Families with Dependent Children (title IV-A of the Act, not including the Work Incentive Program (WIN) authorized by section 402(a)19(G); HHS grants for WIN are subject to this part);

(ii) Child Support Enforcement and Establishment of Paternity (title IV-D of the Act);

(iii) Foster Care and Adoption Assistance (title IV-E of the Act);

(iv) Aid to the Aged, Blind, and Disabled (titles I, X, XIV, and XVI-AABD of the Act); and

(v) Medical Assistance (Medicaid) (title XIX of the Act) not including the State Medicaid Fraud Control program authorized by section 1903(a)(6)(B).

(4) Entitlement grants under the following programs of The National School Lunch Act:

(i) School Lunch (section 4 of the Act),

(ii) Commodity Assistance (section 6 of the Act),

(iii) Special Meal Assistance (section 11 of the Act),

(iv) Summer Food Service for Children (section 13 of the Act), and

(v) Child Care Food Program (section 17 of the Act).

(5) Entitlement grants under the following programs of The Child Nutrition Act of 1966:

(i) Special Milk (section 3 of the Act), and

(ii) School Breakfast (section 4 of the Act).

(6) Entitlement grants for State Administrative expenses under The Food Stamp Act of 1977 (section 16 of the Act).

(7) A grant for an experimental, pilot, or demonstration project that is also supported by a grant listed in paragraph (a)(3) of this section;

(8) Grant funds awarded under subsection 412(e) of the Immigration and Nationality Act (8 U.S.C. 1522(e)) and subsection 501(a) of the Refugee Education Assistance Act of 1980 (Pub. L. 96–422, 94 Stat. 1809), for cash assistance, medical assistance, and supplemental security income benefits to refugees and entrants and the administrative costs of providing the assistance and benefits;

(9) Grants to local education agencies under 20 U.S.C. 236 through 241–1(a), and 242 through 244 (portions of the Impact Aid program), except for 20 U.S.C. 238(d)(2)(c) and 240(f) (Entitlement Increase for Handicapped Children); and

(10) Payments under the Veterans Administration's State Home Per Diem Program (38 U.S.C. 641(a)).

(b) *Entitlement programs.* Entitlement programs enumerated above in § 18.4(a)(3) through (8) are subject to subpart E.

§ 18.5 Effect on other issuances.

All other grants administration provisions of codified program regulations, program manuals, handbooks and other nonregulatory materials which are inconsistent with this part are superseded, except to the extent they are required by statute, or authorized in accordance with the exception provision in § 18.6.

§ 18.6 Additions and exceptions.

(a) For classes of grants and grantees subject to this part, Federal agencies may not impose additional administrative requirements except in codified regulations published in the FEDERAL REGISTER.

(b) Exceptions for classes of grants or grantees may be authorized only by OMB.

(1) All Departmental requests for exceptions shall be processed through the Assistant Secretary of Administration.

(2) [Reserved]

(c) Exceptions on a case-by-case basis and for subgrantees may be authorized by the affected Federal agencies.

(1) All case-by-case exceptions may be authorized by the affected operating administrations or departmental offices, with the concurrence of the Assistant Secretary for Administration.

(2) [Reserved]

[53 FR 8086 and 8087, Mar. 11, 1988, as amended at 60 FR 19646, Apr. 19, 1995]

Subpart B—Pre-Award Requirements

§ 18.10 Forms for applying for grants.

(a) *Scope.* (1) This section prescribes forms and instructions to be used by governmental organizations (except hospitals and institutions of higher education operated by a government) in applying for grants. This section is not applicable, however, to formula grant programs which do not require applicants to apply for funds on a project basis.

(2) This section applies only to applications to Federal agencies for grants, and is not required to be applied by grantees in dealing with applicants for subgrants. However, grantees are encouraged to avoid more detailed or burdensome application requirements for subgrants.

(3) Forms and procedures for Federal Highway Administration (FHWA) projects are contained in 23 CFR part 630, subpart B, 23 CFR part 420, subpart A, and 49 CFR part 450.

(b) *Authorized forms and instructions for governmental organizations.* (1) In applying for grants, applicants shall only use standard application forms or those prescribed by the granting agency with the approval of OMB under the Paperwork Reduction Act of 1980.

(2) Applicants are not required to submit more than the original and two copies of preapplications or applications.

(3) Applicants must follow all applicable instructions that bear OMB clearance numbers. Federal agencies may specify and describe the programs, functions, or activities that will be used to plan, budget, and evaluate the work under a grant. Other supplementary instructions may be issued only with the approval of OMB to the extent required under the Paperwork Reduction Act of 1980. For any standard form, except the SF–424 facesheet, Federal agencies may shade out or instruct the applicant to disregard any line item that is not needed.

(4) When a grantee applies for additional funding (such as a continuation or supplemental award) or amends a previously submitted application, only the affected pages need be submitted. Previously submitted pages with information that is still current need not be resubmitted.

[53 FR 8086 and 8087, Mar. 11, 1988, as amended at 53 FR 8086, Mar. 11, 1988]

§ 18.11 State plans.

(a) *Scope.* The statutes for some programs require States to submit plans before receiving grants. Under regulations implementing Executive Order 12372, ''Intergovernmental Review of Federal Programs,'' States are allowed to simplify, consolidate and substitute plans. This section contains additional provisions for plans that are subject to regulations implementing the Executive order.

(b) *Requirements.* A State need meet only Federal administrative or programmatic requirements for a plan that are in statutes or codified regulations.

(c) *Assurances.* In each plan the State will include an assurance that the State shall comply with all applicable Federal statutes and regulations in effect with respect to the periods for which it receives grant funding. For this assurance and other assurances required in the plan, the State may:

(1) Cite by number the statutory or regulatory provisions requiring the assurances and affirm that it gives the assurances required by those provisions,

(2) Repeat the assurance language in the statutes or regulations, or

(3) Develop its own language to the extent permitted by law.

(d) *Amendments.* A State will amend a plan whenever necessary to reflect: (1) New or revised Federal statutes or regulations or (2) a material change in any State law, organization, policy, or State agency operation. The State will obtain approval for the amendment and its effective date but need submit for approval only the amended portions of the plan.

§ 18.12 Special grant or subgrant conditions for "high-risk" grantees.

(a) A grantee or subgrantee may be considered ''high risk'' if an awarding agency determines that a grantee or subgrantee:

(1) Has a history of unsatisfactory performance, or

(2) Is not financially stable, or

(3) Has a management system which does not meet the management standards set forth in this part, or

(4) Has not conformed to terms and conditions of previous awards, or

(5) Is otherwise not responsible; and if the awarding agency determines that an award will be made, special conditions and/or restrictions shall correspond to the high risk condition and shall be included in the award.

(b) Special conditions or restrictions may include:

(1) Payment on a reimbursement basis;

(2) Withholding authority to proceed to the next phase until receipt of evidence of acceptable performance within a given funding period;

(3) Requiring additional, more detailed financial reports;

(4) Additional project monitoring;

(5) Requiring the grante or subgrantee to obtain technical or management assistance; or

(6) Establishing additional prior approvals.

(c) If an awarding agency decides to impose such conditions, the awarding official will notify the grantee or subgrantee as early as possible, in writing, of:

(1) The nature of the special conditions/restrictions;

(2) The reason(s) for imposing them;

(3) The corrective actions which must be taken before they will be removed and the time allowed for completing the corrective actions; and

(4) The method of requesting reconsideration of the conditions/restrictions imposed.

Subpart C—Post-Award Requirements

FINANCIAL ADMINISTRATION

§ 18.20 Standards for financial management systems.

(a) A State must expand and account for grant funds in accordance with State laws and procedures for expending and accounting for its own funds. Fiscal control and accounting procedures of the State, as well as its subgrantees and cost-type contractors, must be sufficient to—

(1) Permit preparation of reports required by this part and the statutes authorizing the grant, and

(2) Permit the tracing of funds to a level of expenditures adequate to establish that such funds have not been used in violation of the restrictions and prohibitions of applicable statutes.

(b) The financial management systems of other grantees and subgrantees must meet the following standards:

(1) *Financial reporting.* Accurate, current, and complete disclosure of the financial results of financially assisted activities must be made in accordance with the financial reporting requirements of the grant or subgrant.

(2) *Accounting records.* Grantees and subgrantees must maintain records which adequately identify the source and application of funds provided for financially-assisted activities. These records must contain information pertaining to grant or subgrant awards and authorizations, obligations, unobligated balances, assets, liabilities, outlays or expenditures, and income.

(3) *Internal control.* Effective control and accountability must be maintained for all grant and subgrant cash, real

and personal property, and other assets. Grantees and subgrantees must adequately safeguard all such property and must assure that it is used solely for authorized purposes.

(4) *Budget control.* Actual expenditures or outlays must be compared with budgeted amounts for each grant or subgrant. Financial information must be related to performance or productivity data, including the development of unit cost information whenever appropriate or specifically required in the grant or subgrant agreement. If unit cost data are required, estimates based on available documentation will be accepted whenever possible.

(5) *Allowable cost.* Applicable OMB cost principles, agency program regulations, and the terms of grant and subgrant agreements will be followed in determining the reasonableness, allowability, and allocability of costs.

(6) *Source documentation.* Accounting records must be supported by such source documentation as cancelled checks, paid bills, payrolls, time and attendance records, contract and subgrant award documents, etc.

(7) *Cash management.* Procedures for minimizing the time elapsing between the transfer of funds from the U.S. Treasury and disbursement by grantees and subgrantees must be followed whenever advance payment procedures are used. Grantees must establish reasonable procedures to ensure the receipt of reports on subgrantees' cash balances and cash disbursements in sufficient time to enable them to prepare complete and accurate cash transactions reports to the awarding agency. When advances are made by letter-of-credit or electronic transfer of funds methods, the grantee must make drawdowns as close as possible to the time of making disbursements. Grantees must monitor cash drawdowns by their subgrantees to assure that they conform substantially to the same standards of timing and amount as apply to advances to the grantees.

(c) An awarding agency may review the adequacy of the financial management system of any applicant for financial assistance as part of a preaward review or at any time subsequent to award.

(d) Certain Urban Mass Transportation Administration (UMTA) grantees shall comply with the requirements of section 15 of the Urban Mass Transportation (UMT) Act of 1964, as amended, as implemented by 49 CFR part 630, regarding a uniform system of accounts and records and a uniform reporting system for certain grantees.

[53 FR 8086 and 8087, Mar. 11, 1988, as amended at 53 FR 8086, Mar. 11, 1988]

§ 18.21 Payment.

(a) *Scope.* This section prescribes the basic standard and the methods under which a Federal agency will make payments to grantees, and grantees will make payments to subgrantees and contractors.

(b) *Basic standard.* Methods and procedures for payment shall minimize the time elapsing between the transfer of funds and disbursement by the grantee or subgrantee, in accordance with Treasury regulations at 31 CFR part 205.

(c) *Advances.* Grantees and subgrantees shall be paid in advance, provided they maintain or demonstrate the willingness and ability to maintain procedures to minimize the time elapsing between the transfer of the funds and their disbursement by the grantee or subgrantee.

(d) *Reimbursement.* Reimbursement shall be the preferred method when the requirements in paragraph (c) of this section are not met. Grantees and subgrantees may also be paid by reimbursement for any construction grant. Except as otherwise specified in regulation, Federal agencies shall not use the percentage of completion method to pay construction grants. The grantee or subgrantee may use that method to pay its construction contractor, and if it does, the awarding agency's payments to the grantee or subgrantee will be based on the grantee's or subgrantee's actual rate of disbursement.

(e) *Working capital advances.* If a grantee cannot meet the criteria for advance payments described in paragraph (c) of this section, and the Federal agency has determined that reimbursement is not feasible because the grantee lacks sufficient working capital, the awarding agency may provide cash or a working capital advance

basis. Under this procedure the awarding agency shall advance cash to the grantee to cover its estimated disbursement needs for an initial period generally geared to the grantee's disbursing cycle. Thereafter, the awarding agency shall reimburse the grantee for its actual cash disbursements. The working capital advance method of payment shall not be used by grantees or subgrantees if the reason for using such method is the unwillingness or inability of the grantee to provide timely advances to the subgrantee to meet the subgrantee's actual cash disbursements.

(f) *Effect of program income, refunds, and audit recoveries on payment.* (1) Grantees and subgrantees shall disburse repayments to and interest earned on a revolving fund before requesting additional cash payments for the same activity.

(2) Except as provided in paragraph (f)(1) of this section, grantees and subgrantees shall disburse program income, rebates, refunds, contract settlements, audit recoveries and interest earned on such funds before requesting additional cash payments.

(g) *Withholding payments.* (1) Unless otherwise required by Federal statute, awarding agencies shall not withhold payments for proper charges incurred by grantees or subgrantees unless—

(i) The grantee or subgrantee has failed to comply with grant award conditions or

(ii) The grantee or subgrantee is indebted to the United States.

(2) Cash withheld for failure to comply with grant award condition, but without suspension of the grant, shall be released to the grantee upon subsequent compliance. When a grant is suspended, payment adjustments will be made in accordance with § 18.43(c).

(3) A Federal agency shall not make payment to grantees for amounts that are withheld by grantees or subgrantees from payment to contractors to assure satisfactory completion of work. Payments shall be made by the Federal agency when the grantees or subgrantees actually disburse the withheld funds to the contractors or to escrow accounts established to assure satisfactory completion of work.

(h) *Cash depositories.* (1) Consistent with the national goal of expanding the opportunities for minority business enterprises, grantees and subgrantees are encouraged to use minority banks (a bank which is owned at least 50 percent by minority group members). A list of minority owned banks can be obtained from the Minority Business Development Agency, Department of Commerce, Washington, DC 20230.

(2) A grantee or subgrantee shall maintain a separate bank account only when required by Federal-State agreement.

(i) *Interest earned on advances.* Except for interest earned on advances of funds exempt under the Intergovernmental Cooperation Act (31 U.S.C. 6501 et seq.) and the Indian Self-Determination Act (23 U.S.C. 450), grantees and subgrantees shall promptly, but at least quarterly, remit interest earned on advances to the Federal agency. The grantee or subgrantee may keep interest amounts up to $100 per year for administrative expenses.

(j) 23 U.S.C. 121 limits payments to States for highway construction projects to the Federal share of the costs of construction incurred to date, plus the Federal share of the value of stockpiled materials.

(k) Section 404 of the Surface Transportation Assistance Act of 1982 directs the Secretary to reimburse States for the Federal share of costs incurred.

[53 FR 8086 and 8087, Mar. 11, 1988, as amended at 53 FR 8086, Mar. 11, 1988]

§ 18.22 Allowable costs.

(a) *Limitation on use of funds.* Grant funds may be used only for:

(1) The allowable costs of the grantees, subgrantees and cost-type contractors, including allowable costs in the form of payments to fixed-price contractors; and

(2) Reasonable fees or profit to cost-type contractors but not any fee or profit (or other increment above allowable costs) to the grantee or subgrantee.

(b) *Applicable cost principles.* For each kind of organization, there is a set of Federal principles for determining allowable costs. Allowable costs will be determined in accordance with the cost

principles applicable to the organization incurring the costs. The following chart lists the kinds of organizations and the applicable cost principles.

For the costs of a—	Use the principles in—
State, local or Indian tribal government.	OMB Circular A–87.
Private nonprofit organization other than an (1) institution of higher education, (2) hospital, or (3) organization named in OMB Circular A–122 as not subject to that circular.	OMB Circular A–122.
Educational institutions.	OMB Circular A–21.
For-profit organization other than a hospital and an organization named in OBM Circular A–122 as not subject to that circular.	48 CFR part 31. Contract Cost Principles and Procedures, or uniform cost accounting standards that comply with cost principles acceptable to the Federal agency.

(c) The overhead cost principles of OMB Circular A–87 shall not apply to State highway agencies for FHWA funded grants.

(d) Sections 3(1) and 9(p) of the UMT Act of 1964, as amended, authorize the Secretary to include in the net project cost eligible for Federal assistance, the amount of interest earned and payable on bonds issued by the State or local public body to the extent that the proceeds of such bonds have actually been expended in carrying out such project or portion thereof. Limitations are established in sections 3 and 9 of the UMT Act of 1964, as amended.

(e) Section 9 of the UMT Act of 1964, as amended, authorizes grants to finance the leasing of facilities and equipment for use in mass transportation services provided leasing is more cost effective than acquisition or construction.

[53 FR 8086 and 8087, Mar. 11, 1988, as amended at 53 FR 8086, Mar. 11, 1988]

§ 18.23 Period of availability of funds.

(a) *General.* Where a funding period is specified, a grantee may charge to the award only costs resulting from obligations of the funding period unless carryover of unobligated balances is permitted, in which case the carryover balances may be charged for costs resulting from obligations of the subsequent funding period.

(b) *Liquidation of obligations.* A grantee must liquidate all obligations incurred under the award not later than 90 days after the end of the funding period (or as specified in a program regulation) to coincide with the submission of the annual Financial Status Report (SF–269). The Federal agency may extend this deadline at the request of the grantee.

§ 18.24 Matching or cost sharing.

(a) *Basic rule: Costs and contributions acceptable.* With the qualifications and exceptions listed in paragraph (b) of this section, a matching or cost sharing requirement may be satisfied by either or both of the following:

(1) Allowable costs incurred by the grantee, subgrantee or a cost-type contractor under the assistance agreement. This includes allowable costs borne by non-Federal grants or by others cash donations from non-Federal third parties.

(2) The value of third party in-kind contributions applicable to the period to which the cost sharing or matching requirements applies.

(b) *Qualifications and exceptions*—(1) *Costs borne by other Federal grant agreements.* Except as provided by Federal statute, a cost sharing or matching requirement may not be met by costs borne by another Federal grant. This prohibition does not apply to income earned by a grantee or subgrantee from a contract awarded under another Federal grant.

(2) *General revenue sharing.* For the purpose of this section, general revenue sharing funds distributed under 31 U.S.C. 6702 are not considered Federal grant funds.

(3) *Cost or contributions counted towards other Federal costs-sharing requirements.* Neither costs nor the values of third party in-kind contributions may count towards satisfying a cost sharing or matching requirement of a grant agreement if they have been or will be counted towards satisfying a cost sharing or matching requirement of another Federal grant agreement, a Federal procurement contract, or any other award of Federal funds.

(4) *Costs financed by program income.* Costs financed by program income, as defined in §18.25, shall not count towards satisfying a cost sharing or matching requirement unless they are

expressly permitted in the terms of the assistance agreement. (This use of general program income is described in § 18.25(g).)

(5) *Services or property financed by income earned by contractors.* Contractors under a grant may earn income from the activities carried out under the contract in addition to the amounts earned from the party awarding the contract. No costs of services or property supported by this income may count toward satisfying a cost sharing or matching requirement unless other provisions of the grant agreement expressly permit this kind of income to be used to meet the requirement.

(6) *Records.* Costs and third party in-kind contributions counting towards satisfying a cost sharing or matching requirement must be verifiable from the records of grantees and subgrantee or cost-type contractors. These records must show how the value placed on third party in-kind contributions was derived. To the extent feasible, volunteer services will be supported by the same methods that the organization uses to support the allocability of regular personnel costs.

(7) *Special standards for third party in-kind contributions.* (i) Third party in-kind contributions count towards satisfying a cost sharing or matching requirement only where, if the party receiving the contributions were to pay for them, the payments would be allowable costs.

(ii) Some third party in-kind contributions are goods and services that, if the grantee, subgrantee, or contractor receiving the contribution had to pay for them, the payments would have been an indirect costs. Costs sharing or matching credit for such contributions shall be given only if the grantee, subgrantee, or contractor has established, along with its regular indirect cost rate, a special rate for allocating to individual projects or programs the value of the contributions.

(iii) A third party in-kind contribution to a fixed-price contract may count towards satisfying a cost sharing or matching requirement only if it results in:

(A) An increase in the services or property provided under the contract (without additional cost to the grantee or subgrantee) or

(B) A cost savings to the grantee or subgrantee.

(iv) The values placed on third party in-kind contributions for cost sharing or matching purposes will conform to the rules in the succeeding sections of this part. If a third party in-kind contribution is a type not treated in those sections, the value placed upon it shall be fair and reasonable.

(8) 23 U.S.C. 121(a) permits reimbursement for actual construction cost incurred by States for highway construction projects. Except for private donations of right-of-way, contributions and donations shall not be considered State costs, and shall not be allowable for matching purposes for highway construction contracts. 23 U.S.C. 323 permits private donations of right-of-way to be used for a State's matching share, and establishes procedures for determining the fair market value of such donated right-of-way.

(9) Section 4(a) of the UMT Act of 1964, as amended, provides that the Federal grant for any project to be assisted under section 3 of the UMT Act of 1964, as amended, shall be in an amount equal to 75 percent of the net project costs. Net project cost is defined as that portion of the cost of the project which cannot be reasonably financed from revenues.

(10) Section 18(e) of the UMT Act of 1964, as amended, limits the Federal share to 80 percent of the net cost of construction, as determined by the Secretary of Transportation. The Federal share for the payment of subsidies for operating expenses, as defined by the Secretary, shall not exceed 50 percent of the net cost of such operating expense projects.

(c) *Valuation of donated services*—(1) *Volunteer services.* Unpaid services provided to a grantee or subgrantee by individuals will be valued at rates consistent with those ordinarily paid for similar work in the grantee's or subgrantee's organization. If the grantee or subgrantee does not have employees performing similar work, the rates will be consistent with those ordinarily paid by other employers for similar work in the same labor market. In either case, a reasonable amount for

fringe benefits may be included in the valuation.

(2) *Employees of other organizations.* When an employer other than a grantee, subgrantee, or cost-type contractor furnishes free of charge the services of an employee in the employee's normal line of work, the services will be valued at the employee's regular rate of pay exclusive of the employee's fringe benefits and overhead costs. If the services are in a different line of work, paragraph (c)(1) of this section applies.

(3) Section 5(g) of the Department of Transportation Act (49 U.S.C. 1654(g)) limits in-kind service contributions under the local Rail Service Assistance Program to ''the cash equivalent of State salaries for State public employees working in the State rail assistance program, but not including overhead and general administrative costs.''

(d) *Valuation of third party donated supplies and loaned equipment or space.* (1) If a third party donates supplies, the contribution will be valued at the market value of the supplies at the time of donation.

(2) If a third party donates the use of equipment or space in a building but retains title, the contribution will be valued at the fair rental rate of the equipment or space.

(e) *Valuation of third party donated equipment, buildings, and land.* If a third party donates equipment, buildings, or land, and title passes to a grantee or subgrantee, the treatment of the donated property will depend upon the purpose of the grant or subgrant, as follows:

(1) *Awards for capital expenditures.* If the purpose of the grant or subgrant is to assist the grantee or subgrantee in the acquisition of property, the market value of that property at the time of donation may be counted as cost sharing or matching,

(2) *Other awards.* If assisting in the acquisition of property is not the purpose of the grant or subgrant, paragraphs (e)(2) (i) and (ii) of this section apply:

(i) If approval is obtained from the awarding agency, the market value at the time of donation of the donated equipment or buildings and the fair rental rate of the donated land may be counted as cost sharing or matching. In the case of a subgrant, the terms of the grant agreement may require that the approval be obtained from the Federal agency as well as the grantee. In all cases, the approval may be given only if a purchase of the equipment or rental of the land would be approved as an allowable direct cost. If any part of the donated property was acquired with Federal funds, only the non-federal share of the property may be counted as cost-sharing or matching.

(ii) If approval is not obtained under paragraph (e)(2)(i) of this section, no amount may be counted for donated land, and only depreciation or use allowances may be counted for donated equipment and buildings. The depreciation or use allowances for this property are not treated as third party in-kind contributions. Instead, they are treated as costs incurred by the grantee or subgrantee. They are computed and allocated (usually as indirect costs) in accordance with the cost principles specified in §18.22, in the same way as depreciation or use allowances for purchased equipment and buildings. The amount of depreciation or use allowances for donated equipment and buildings is based on the property's market value at the time it was donated.

(f) *Valuation of grantee or subgrantee donated real property for construction/acquisition.* If a grantee or subgrantee donates real property for a construction or facilities acquisition project, the current market value of that property may be counted as cost sharing or matching. If any part of the donated property was acquired with Federal funds, only the non-federal share of the property may be counted as cost sharing or matching.

(g) *Appraisal of real property.* In some cases under paragraphs (d), (e) and (f) of this section, it will be necessary to establish the market value of land or a building or the fair rental rate of land or of space in a building. In these cases, the Federal agency may require the market value or fair rental value be set by an independent appraiser, and that the value or rate be certified by the grantee. This requirement will also be imposed by the grantee on subgrantees.

[53 FR 8086 and 8087, Mar. 11, 1988, as amended at 53 FR 8086, Mar. 11, 1988]

§ 18.25 Program income.

(a) *General.* Grantees are encouraged to earn income to defray program costs. Program income includes income from fees for services performed, from the use or rental of real or personal property acquired with grant funds, from the sale of commodities or items fabricated under a grant agreement, and from payments of principal and interest on loans made with grant funds. Except as otherwise provided in regulations of the Federal agency, program income does not include interest on grant funds, rebates, credits, discounts, refunds, etc. and interest earned on any of them.

(b) *Definition of program income.* Program income means gross income received by the grantee or subgrantee directly generated by a grant supported activity, or earned only as a result of the grant agreement during the grant period. ''During the grant period'' is the time between the effective date of the award and the ending date of the award reflected in the final financial report.

(c) *Cost of generating program income.* If authorized by Federal regulations or the grant agreement, costs incident to the generation of program income may be deducted from gross income to determine program income.

(d) *Governmental revenues.* Taxes, special assessments, levies, fines, and other such revenues raised by a grantee or subgrantee are not program income unless the revenues are specifically identified in the grant agreement or Federal agency regulations as program income.

(e) *Royalties.* Income from royalties and license fees for copyrighted material, patents, and inventions developed by a grantee or subgrantee is program income only if the revenues are specifically identified in the grant agreement or Federal agency regulations as program income. (See § 18.34.)

(f) *Property.* Proceeds from the sale of real property or equipment will be handled in accordance with the requirements of §§ 18.31 and 18.32.

(g) *Use of program income.* Program income shall be deducted from outlays which may be both Federal and non-Federal as described below, unless the Federal agency regulations or the grant agreement specify another alternative (or a combination of the alternatives). In specifying alternatives, the Federal agency may distinguish between income earned by the grantee and income earned by subgrantees and between the sources, kinds, or amounts of income. When Federal agencies authorize the alternatives in paragraphs (g) (2) and (3) of this section, program income in excess of any limits stipulated shall also be deducted from outlays.

(1) *Deduction.* Ordinarily program income shall be deducted from total allowable costs to determine the net allowable costs. Program income shall be used for current costs unless the Federal agency authorizes otherwise. Program income which the grantee did not anticipate at the time of the award shall be used to reduce the Federal agency and grantee contributions rather than to increase the funds committed to the project.

(2) *Addition.* When authorized, program income may be added to the funds committed to the grant agreement by the Federal agency and the grantee. The program income shall be used for the purposes and under the conditions of the grant agreement.

(3) *Cost sharing or matching.* When authorized, program income may be used to meet the cost sharing or matching requirement of the grant agreement. The amount of the Federal grant award remains the same.

(4) Section 3(a)(1)(D) of the UMT Act of 1964, as amended, provides that the Secretary shall establish requirements for the use of income derived from appreciated land values for certain UMTA grants. Specific requirements shall be contained in grant agreements.

(5) UMTA grantees may retain program income for allowable capital or operating expenses.

(6) For grants awarded under section 9 of the UMT Act of 1964, as amended, any revenues received from the sale of advertising and concessions in excess of fiscal year 1985 levels shall be excluded from program income.

(7) 23 U.S.C. 156 requires that States shall charge fair market value for the sale, lease, or use of right-of-way airspace for non-transportation purposes

and that such income shall be used for projects eligible under 23 U.S.C.

(h) *Income after the award period.* There are no Federal requirements governing the disposition of program income earned after the end of the award period (i.e., until the ending date of the final financial report, see paragraph (a) of this section), unless the terms of the agreement or the Federal agency regulations provide otherwise.

[53 FR 8086 and 8087, Mar. 11, 1988, as amended at 53 FR 8087, Mar. 11, 1988]

§ 18.26 Non-Federal audits.

(a) *Basic rule.* Grantees and subgrantees are responsible for obtaining audits in accordance with the Single Audit Act Amendments of 1996 (31 U.S.C. 7501–7507) and revised OMB Circular A–133, ''Audits of States, Local Governments, and Non-Profit Organizations.'' The audits shall be made by an independent auditor in accordance with generally accepted government auditing standards covering financial audits.

(b) *Subgrantees.* State or local governments, as those terms are defined for purposes of the Single Audit Act Amendments of 1996, that provide Federal awards to a subgrantee, which expends $300,000 or more (or other amount as specified by OMB) in Federal awards in a fiscal year, shall:

(1) Determine whether State or local subgrantees have met the audit requirements of the Act and whether subgrantees covered by OMB Circular A–110, ''Uniform Administrative Requirements for Grants and Agreements with Institutions of Higher Education, Hospitals, and Other Non-Profit Organizations,'' have met the audit requirements of the Act. Commercial contractors (private for-profit and private and governmental organizations) providing goods and services to State and local governments are not required to have a single audit performed. State and local governments should use their own procedures to ensure that the contractor has complied with laws and regulations affecting the expenditure of Federal funds;

(2) Determine whether the subgrantee spent Federal assistance funds provided in accordance with applicable laws and regulations. This may be accomplished by reviewing an audit of the subgrantee made in accordance with the Act, Circular A–110, or through other means (e.g., program reviews) if the subgrantee has not had such an audit;

(3) Ensure that appropriate corrective action is taken within six months after receipt of the audit report in instance of noncompliance with Federal laws and regulations;

(4) Consider whether subgrantee audits necessitate adjustment of the grantee's own records; and

(5) Require each subgrantee to permit independent auditors to have access to the records and financial statements.

(c) *Auditor selection.* In arranging for audit services, §18.36 shall be followed.

[53 FR 8086 and 8087, Mar. 11, 1988, as amended at 61 FR 21387, May 10, 1996; 62 FR 45939, 45947, Aug. 29, 1997]

CHANGES, PROPERTY, AND SUBAWARDS

§ 18.30 Changes.

(a) *General.* Grantees and subgrantees are permitted to rebudget within the approved direct cost budget to meet unanticipated requirements and may make limited program changes to the approved project. However, unless waived by the awarding agency, certain types of post-award changes in budgets and projects shall require the prior written approval of the awarding agency.

(b) *Relation to cost principles.* The applicable cost principles (see §18.22) contain requirements for prior approval of certain types of costs. Except where waived, those requirements apply to all grants and subgrants even if paragraphs (c) through (f) of this section do not.

(c) *Budget changes*—(1) *Nonconstruction projects.* Except as stated in other regulations or an award document, grantees or subgrantees shall obtain the prior approval of the awarding agency whenever any of the following changes is anticipated under a nonconstruction award:

(i) Any revision which would result in the need for additional funding.

(ii) Unless waived by the awarding agency, cumulative transfers among direct cost categories, or, if applicable, among separately budgeted programs,

projects, functions, or activities which exceed or are expected to exceed ten percent of the current total approved budget, whenever the awarding agency's share exceeds $100,000.

(iii) Transfer of funds allotted for training allowances (i.e., from direct payments to trainees to other expense categories).

(2) *Construction projects.* Grantees and subgrantees shall obtain prior written approval for any budget revision which would result in the need for additional funds.

(3) *Combined construction and nonconstruction projects.* When a grant or subgrant provides funding for both construction and nonconstruction activities, the grantee or subgrantee must obtain prior written approval from the awarding agency before making any fund or budget transfer from nonconstruction to construction or vice versa.

(d) *Programmatic changes.* Grantees or subgrantees must obtain the prior approval of the awarding agency whenever any of the following actions is anticipated:

(1) Any revision of the scope or objectives of the project (regardless of whether there is an associated budget revision requiring prior approval).

(2) Need to extend the period of availability of funds.

(3) Changes in key persons in cases where specified in an application or a grant award. In research projects, a change in the project director or principal investigator shall always require approval unless waived by the awarding agency.

(4) Under nonconstruction projects, contracting out, subgranting (if authorized by law) or otherwise obtaining the services of a third party to perform activities which are central to the purposes of the award. This approval requirement is in addition to the approval requirements of §18.36 but does not apply to the procurement of equipment, supplies, and general support services.

(e) *Additional prior approval requirements.* The awarding agency may not require prior approval for any budget revision which is not described in paragraph (c) of this section.

(f) *Requesting prior approval.* (1) A request for prior approval of any budget revision will be in the same budget formal the grantee used in its application and shall be accompanied by a narrative justification for the proposed revision.

(2) A request for a prior approval under the applicable Federal cost principles (see §18.22) may be made by letter.

(3) A request by a subgrantee for prior approval will be addressed in writing to the grantee. The grantee will promptly review such request and shall approve or disapprove the request in writing. A grantee will not approve any budget or project revision which is inconsistent with the purpose or terms and conditions of the Federal grant to the grantee. If the revision, requested by the subgrantee would result in a change to the grantee's approved project which requires Federal prior approval, the grantee will obtain the Federal agency's approval before approving the subgrantee's request.

§18.31 Real property.

(a) *Title.* Subject to the obligations and conditions set forth in this section, title to real property acquired under a grant or subgrant will vest upon acquisition in the grantee or subgrantee respectively.

(b) *Use.* Except as otherwise provided by Federal statutes, real property will be used for the originally authorized purposes as long as needed for that purposes, and the grantee or subgrantee shall not dispose of or encumber its title or other interests.

(c) *Disposition.* When real property is no longer needed for the originally authorized purpose, the grantee or subgrantee will request disposition instructions from the awarding agency. The instructions will provide for one of the following alternatives:

(1) *Retention of title.* Retain title after compensating the awarding agency. The amount paid to the awarding agency will be computed by applying the awarding agency's percentage of participation in the cost of the original purchase to the fair market value of the property. However, in those situations where a grantee or subgrantee is disposing of real property acquired

with grant funds and acquiring replacement real property under the same program, the net proceeds from the disposition may be used as an offset to the cost of the replacement property.

(2) *Sale of property.* Sell the property and compensate the awarding agency. The amount due to the awarding agency will be calculated by applying the awarding agency's percentage of participation in the cost of the original purchase to the proceeds of the sale after deduction of any actual and reasonable selling and fixing-up expenses. If the grant is still active, the net proceeds from sale may be offset against the original cost of the property. When a grantee or subgrantee is directed to sell property, sales procedures shall be followed that provide for competition to the extent practicable and result in the highest possible return.

(3) *Transfer of title.* Transfer title to the awarding agency or to a third-party designated/approved by the awarding agency. The grantee or subgrantee shall be paid an amount calculated by applying the grantee or subgrantee's percentage of participation in the purchase of the real property to the current fair market value of the property.

(d) If the conditions in 23 U.S.C. 103(e) (5), (6), or (7), as appropriate, are met and approval is given by the Secretary, States shall not be required to repay the Highway Trust Fund for the cost of right-of-way and other items when certain segments of the Interstate System are withdrawn.

[53 FR 8086 and 8087, Mar. 11, 1988, as amended at 53 FR 8087, Mar. 11, 1988]

§ 18.32 Equipment.

(a) *Title.* Subject to the obligations and conditions set forth in this section, title to equipment acquired under a grant or subgrant will vest upon acquisition in the grantee or subgrantee respectively.

(b) *States.* A State will use, manage, and dispose of equipment acquired under a grant by the State in accordance with State laws and procedures. Other grantees and subgrantees will follow paragraphs (c) through (e) of this section.

(c) *Use.* (1) Equipment shall be used by the grantee or subgrantee in the program or project for which it was acquired as long as needed, whether or not the project or program continues to be supported by Federal funds. When no longer needed for the original program or project, the equipment may be used in other activities currently or previously supported by a Federal agency.

(2) The grantee or subgrantee shall also make equipment available for use on other projects or programs currently or previously supported by the Federal Government, providing such use will not interfere with the work on the projects or program for which it was originally acquired. First preference for other use shall be given to other programs or projects supported by the awarding agency. User fees should be considered if appropriate.

(3) Notwithstanding the encouragement in §18.25(a) to earn program income, the grantee or subgrantee must not use equipment acquired with grant funds to provide services for a fee to compete unfairly with private companies that provide equivalent services, unless specifically permitted or contemplated by Federal statute.

(4) When acquiring replacement equipment, the grantee or subgrantee may use the equipment to be replaced as a trade-in or sell the property and use the proceeds to offset the cost of the replacement property, subject to the approval of the awarding agency.

(d) *Management requirements.* Procedures for managing equipment (including replacement equipment), whether acquired in whole or in part with grant funds, until disposition takes place will, as a minimum, meet the following requirements:

(1) Property records must be maintained that include a description of the property, a serial number or other identification number, the source of property, who holds title, the acquisition date, and cost of the property, percentage of Federal participation in the cost of the property, the location, use and condition of the property, and any ultimate disposition data including the date of disposal and sale price of the property.

(2) A physical inventory of the property must be taken and the results reconciled with the property records at least once every two years.

(3) A control system must be developed to ensure adequate safeguards to prevent loss, damage, or theft of the property. Any loss, damage, or theft shall be investigated.

(4) Adequate maintenance procedures must be developed to keep the property in good condition.

(5) If the grantee or subgrantee is authorized or required to sell the property, proper sales procedures must be established to ensure the highest possible return.

(e) *Disposition.* When original or replacement equipment acquired under a grant or subgrant is no longer needed for the original project or program or for other activities currently or previously supported by a Federal agency, disposition of the equipment will be made as follows:

(1) Items of equipment with a current per-unit fair market value of less than $5,000 may be retained, sold or otherwise disposed of with no further obligation to the awarding agency.

(2) Items of equipment with a current per unit fair market value in excess of $5,000 may be retained or sold and the awarding agency shall have a right to an amount calculated by multiplying the current market value or proceeds from sale by the awarding agency's share of the equipment.

(3) In cases where a grantee or subgrantee fails to take appropriate disposition actions, the awarding agency may direct the grantee or subgrantee to take excess and disposition actions.

(f) *Federal equipment.* In the event a grantee or subgrantee is provided federally-owned equipment:

(1) Title will remain vested in the Federal Government.

(2) Grantees or subgrantees will manage the equipment in accordance with Federal agency rules and procedures, and submit an annual inventory listing.

(3) When the equipment is no longer needed, the grantee or subgrantee will request disposition instructions from the Federal agency.

(g) *Right to transfer title.* The Federal awarding agency may reserve the right to transfer title to the Federal Government or a third part named by the awarding agency when such a third party is otherwise eligible under existing statutes. Such transfers shall be subject to the following standards:

(1) The property shall be identified in the grant or otherwise made known to the grantee in writing.

(2) The Federal awarding agency shall issue disposition instruction within 120 calendar days after the end of the Federal support of the project for which it was acquired. If the Federal awarding agency fails to issue disposition instructions within the 120 calendar-day period the grantee shall follow § 18.32(e).

(3) When title to equipment is transferred, the grantee shall be paid an amount calculated by applying the percentage of participation in the purchase to the current fair market value of the property.

§ 18.33 Supplies.

(a) *Title.* Title to supplies acquired under a grant or subgrant will vest, upon acquisition, in the grantee or subgrantee respectively.

(b) *Disposition.* If there is a residual inventory of unused supplies exceeding $5,000 in total aggregate fair market value upon termination or completion of the award, and if the supplies are not needed for any other federally sponsored programs or projects, the grantee or subgrantee shall compensate the awarding agency for its share.

§ 18.34 Copyrights.

The Federal awarding agency reserves a royalty-free, nonexclusive, and irrevocable license to reproduce, publish or otherwise use, and to authorize others to use, for Federal Government purposes:

(a) The copyright in any work developed under a grant, subgrant, or contract under a grant or subgrant; and

(b) Any rights of copyright to which a grantee, subgrantee or a contractor purchases ownership with grant support.

§ 18.35 Subawards to debarred and suspended parties.

Grantees and subgrantees must not make any award or permit any award (subgrant or contract) at any tier to any party which is debarred or suspended or is otherwise excluded from or ineligible for participation in Federal assistance programs under Executive Order 12549, ''Debarment and Suspension.''

§ 18.36 Procurement.

(a) *States.* When procuring property and services under a grant, a State will follow the same policies and procedures it uses for procurements from its non-Federal funds. The State will ensure that every purchase order or other contract includes any clauses required by Federal statutes and executive orders and their implementing regulations. Other grantees and subgrantees will follow paragraphs (b) through (i) in this section.

(b) *Procurement standards.* (1) Grantees and subgrantees will use their own procurement procedures which reflect applicable State and local laws and regulations, provided that the procurements conform to applicable Federal law and the standards identified in this section.

(2) Grantees and subgrantees will maintain a contract administration system which ensures that contractors perform in accordance with the terms, conditions, and specifications of their contracts or purchase orders.

(3) Grantees and subgrantees will maintain a written code of standards of conduct governing the performance of their employees engaged in the award and administration of contracts. No employee, officer or agent of the grantee or subgrantee shall participate in selection, or in the award or administration of a contract supported by Federal funds if a conflict of interest, real or apparent, would be involved. Such a conflict would arise when:

(i) The employee, officer or agent,

(ii) Any member of his immediate family,

(iii) His or her partner, or

(iv) An organization which employs, or is about to employ, any of the above, has a financial or other interest in the firm selected for award. The grantee's or subgrantee's officers, employees or agents will neither solicit nor accept gratuities, favors or anything of monetary value from contractors, potential contractors, or parties to subagreements. Grantee and subgrantees may set minimum rules where the financial interest is not substantial or the gift is an unsolicited item of nominal intrinsic value. To the extent permitted by State or local law or regulations, such standards or conduct will provide for penalties, sanctions, or other disciplinary actions for violations of such standards by the grantee's and subgrantee's officers, employees, or agents, or by contractors or their agents. The awarding agency may in regulation provide additional prohibitions relative to real, apparent, or potential conflicts of interest.

(4) Grantee and subgrantee procedures will provide for a review of proposed procurements to avoid purchase of unnecessary or duplicative items. Consideration should be given to consolidating or breaking out procurements to obtain a more economical purchase. Where appropriate, an analysis will be made of lease versus purchase alternatives, and any other appropriate analysis to determine the most economical approach.

(5) To foster greater economy and efficiency, grantees and subgrantees are encouraged to enter into State and local intergovernmental agreements for procurement or use of common goods and services.

(6) Grantees and subgrantees are encouraged to use Federal excess and surplus property in lieu of purchasing new equipment and property whenever such use is feasible and reduces project costs.

(7) Grantees and subgrantees are encouraged to use value engineering clauses in contracts for construction projects of sufficient size to offer reasonable opportunities for cost reductions. Value engineering is a systematic and creative anaylsis of each contract item or task to ensure that its essential function is provided at the overall lower cost.

(8) Grantees and subgrantees will make awards only to responsible contractors possessing the ability to perform successfully under the terms and

conditions of a proposed procurement. Consideration will be given to such matters as contractor integrity, compliance with public policy, record of past performance, and financial and technical resources.

(9) Grantees and subgrantees will maintain records sufficient to detail the significant history of a procurement. These records will include, but are not necessarily limited to the following: rationale for the method of procurement, selection of contract type, contractor selection or rejection, and the basis for the contract price.

(10) Grantees and subgrantees will use time and material type contracts only—

(i) After a determination that no other contract is suitable, and

(ii) If the contract includes a ceiling price that the contractor exceeds at its own risk.

(11) Grantees and subgrantees alone will be responsible, in accordance with good administrative practice and sound business judgment, for the settlement of all contractual and administrative issues arising out of procurements. These issues include, but are not limited to source evaluation, protests, disputes, and claims. These standards do not relieve the grantee or subgrantee of any contractual responsibilities under its contracts. Federal agencies will not substitute their judgment for that of the grantee or subgrantee unless the matter is primarily a Federal concern. Violations of law will be referred to the local, State, or Federal authority having proper jurisdiction.

(12) Grantees and subgrantees will have protest procedures to handle and resolve disputes relating to their procurements and shall in all instances disclose information regarding the protest to the awarding agency. A protestor must exhaust all administrative remedies with the grantee and subgrantee before pursuing a protest with the Federal agency. Reviews of protests by the Federal agency will be limited to:

(i) Violations of Federal law or regulations and the standards of this section (violations of State or local law will be under the jurisdiction of State or local authorities) and

(ii) Violations of the grantee's or subgrantee's protest procedures for failure to review a complaint or protest. Protests received by the Federal agency other than those specified above will be referred to the grantee or subgrantee.

(c) *Competition.* (1) All procurement transactions will be conducted in a manner providing full and open competition consistent with the standards of §18.36. Some of the situations considered to be restrictive of competition include but are not limited to:

(i) Placing unreasonable requirements on firms in order for them to qualify to do business,

(ii) Requiring unnecessary experience and excessive bonding,

(iii) Noncompetitive pricing practices between firms or between affiliated companies,

(iv) Noncompetitive awards to consultants that are on retainer contracts,

(v) Organizational conflicts of interest,

(vi) Specifying only a ''brand name'' product instead of allowing ''an equal'' product to be offered and describing the performance of other relevant requirements of the procurement, and

(vii) Any arbitrary action in the procurement process.

(2) Grantees and subgrantees will conduct procurements in a manner that prohibits the use of statutorily or administratively imposed in-State or local geographical preferences in the evaluation of bids or proposals, except in those cases where applicable Federal statutes expressly mandate or encourage geographic preference. Nothing in this section preempts State licensing laws. When contracting for architectural and engineering (A/E) services, geographic location may be a selection criteria provided its application leaves an appropriate number of qualified firms, given the nature and size of the project, to compete for the contract.

(3) Grantees will have written selection procedures for procurement transactions. These procedures will ensure that all solicitations:

(i) Incorporate a clear and accurate description of the technical requirements for the material, product, or service to be procured. Such description shall not, in competitive procurements, contain features which unduly

restrict competition. The description may include a statement of the qualitative nature of the material, product or service to be procured, and when necessary, shall set forth those minimum essential characteristics and standards to which it must conform if it is to satisfy its intended use. Detailed product specifications should be avoided if at all possible. When it is impractical or uneconomical to make a clear and accurate description of the technical requirements, a ''brand name or equal'' description may be used as a means to define the performance or other salient requirements of a procurement. The specific features of the named brand which must be met by offerors shall be clearly stated; and

(ii) Identify all requirements which the offerors must fulfill and all other factors to be used in evaluating bids or proposals.

(4) Grantees and subgrantees will ensure that all prequalified lists of persons, firms, or products which are used in acquiring goods and services are current and include enough qualified sources to ensure maximum open and free competition. Also, grantees and subgrantees will not preclude potential bidders from qualifying during the solicitation period.

(d) *Methods of procurement to be followed*—(1) *Procurement by small purchase procedures.* Small purchase procedures are those relatively simple and informal procurement methods for securing services, supplies, or other property that do not cost more than the simplified acquisition threshold fixed at 41 U.S.C. 403(11) (currently set at $100,000). If small purchase procedures are used, price or rate quotations shall be obtained from an adequate number of qualified sources.

(2) Procurement by *sealed bids* (formal advertising). Bids are publicly solicited and a firm-fixed-price contract (lump sum or unit price) is awarded to the responsible bidder whose bid, conforming with all the material terms and conditions of the invitation for bids, is the lowest in price. The sealed bid method is the preferred method for procuring construction, if the conditions in §18.36(d)(2)(i) apply.

(i) In order for sealed bidding to be feasible, the following conditions should be present:

(A) A complete, adequate, and realistic specification or purchase description is available;

(B) Two or more responsible bidders are willing and able to compete effectively and for the business; and

(C) The procurement lends itself to a firm fixed price contract and the selection of the successful bidder can be made principally on the basis of price.

(ii) If sealed bids are used, the following requirements apply:

(A) The invitation for bids will be publicly advertised and bids shall be solicited from an adequate number of known suppliers, providing them sufficient time prior to the date set for opening the bids;

(B) The invitation for bids, which will include any specifications and pertinent attachments, shall define the items or services in order for the bidder to properly respond;

(C) All bids will be publicly opened at the time and place prescribed in the invitation for bids;

(D) A firm fixed-price contract award will be made in writing to the lowest responsive and responsible bidder. Where specified in bidding documents, factors such as discounts, transportation cost, and life cycle costs shall be considered in determining which bid is lowest. Payment discounts will only be used to determine the low bid when prior experience indicates that such discounts are usually taken advantage of; and

(E) Any or all bids may be rejected if there is a sound documented reason.

(3) Procurement by *competitive proposals.* The technique of competitive proposals is normally conducted with more than one source submitting an offer, and either a fixed-price or cost-reimbursement type contract is awarded. It is generally used when conditions are not appropriate for the use of sealed bids. If this method is used, the following requirements apply:

(i) Requests for proposals will be publicized and identify all evaluation factors and their relative importance. Any response to publicized requests for proposals shall be honored to the maximum extent practical;

(ii) Proposals will be solicited from an adequate number of qualified sources;

(iii) Grantees and subgrantees will have a method for conducting technical evaluations of the proposals received and for selecting awardees;

(iv) Awards will be made to the responsible firm whose proposal is most advantageous to the program, with price and other factors considered; and

(v) Grantees and subgrantees may use competitive proposal procedures for qualifications-based procurement of architectural/engineering (A/E) professional services whereby competitors' qualifications are evaluated and the most qualified competitor is selected, subject to negotiation of fair and reasonable compensation. The method, where price is not used as a selection factor, can only be used in procurement of A/E professional services. It cannot be used to purchase other types of services though A/E firms are a potential source to perform the proposed effort.

(4) Procurement by *noncompetitive proposals* is procurement through solicitation of a proposal from only one source, or after solicitation of a number of sources, competition is determined inadequate.

(i) Procurement by noncompetitive proposals may be used only when the award of a contract is infeasible under small purchase procedures, sealed bids or competitive proposals and one of the following circumstances applies:

(A) The item is available only from a single source;

(B) The public exigency or emergency for the requirement will not permit a delay resulting from competitive solicitation;

(C) The awarding agency authorizes noncompetitive proposals; or

(D) After solicitation of a number of sources, competition is determined inadequate.

(ii) Cost analysis, i.e., verifying the proposed cost data, the projections of the data, and the evaluation of the specific elements of costs and profits, is required.

(iii) Grantees and subgrantees may be required to submit the proposed procurement to the awarding agency for pre-award review in accordance with paragraph (g) of this section.

(e) *Contracting with small and minority firms, women's business enterprise and labor surplus area firms.* (1) The grantee and subgrantee will take all necessary affirmative steps to assure that minority firms, women's business enterprises, and labor surplus area firms are used when possible.

(2) Affirmative steps shall include:

(i) Placing qualified small and minority businesses and women's business enterprises on solicitation lists;

(ii) Assuring that small and minority businesses, and women's business enterprises are solicited whenever they are potential sources;

(iii) Dividing total requirements, when economically feasible, into smaller tasks or quantities to permit maximum participation by small and minority business, and women's business enterprises;

(iv) Establishing delivery schedules, where the requirement permits, which encourage participation by small and minority business, and women's business enterprises;

(v) Using the services and assistance of the Small Business Administration, and the Minority Business Development Agency of the Department of Commerce; and

(vi) Requiring the prime contractor, if subcontracts are to be let, to take the affirmative steps listed in paragraphs (e)(2) (i) through (v) of this section.

(f) *Contract cost and price.* (1) Grantees and subgrantees must perform a cost or price analysis in connection with every procurement action including contract modifications. The method and degree of analysis is dependent on the facts surrounding the particular procurement situation, but as a starting point, grantees must make independent estimates before receiving bids or proposals. A cost analysis must be performed when the offeror is required to submit the elements of his estimated cost, e.g., under professional, consulting, and architectural engineering services contracts. A cost analysis will be necessary when adequate price competition is lacking, and for sole source procurements, including contract modifications or change orders,

unless price resonableness can be established on the basis of a catalog or market price of a commercial product sold in substantial quantities to the general public or based on prices set by law or regulation. A price analysis will be used in all other instances to determine the reasonableness of the proposed contract price.

(2) Grantees and subgrantees will negotiate profit as a separate element of the price for each contract in which there is no price competition and in all cases where cost analysis is performed. To establish a fair and reasonable profit, consideration will be given to the complexity of the work to be performed, the risk borne by the contractor, the contractor's investment, the amount of subcontracting, the quality of its record of past performance, and industry profit rates in the surrounding geographical area for similar work.

(3) Costs or prices based on estimated costs for contracts under grants will be allowable only to the extent that costs incurred or cost estimates included in negotiated prices are consistent with Federal cost principles (see §18.22). Grantees may reference their own cost principles that comply with the applicable Federal cost principles.

(4) The cost plus a percentage of cost and percentage of construction cost methods of contracting shall not be used.

(g) *Awarding agency review.* (1) Grantees and subgrantees must make available, upon request of the awarding agency, technical specifications on proposed procurements where the awarding agency believes such review is needed to ensure that the item and/or service specified is the one being proposed for purchase. This review generally will take place prior to the time the specification is incorporated into a solicitation document. However, if the grantee or subgrantee desires to have the review accomplished after a solicitation has been developed, the awarding agency may still review the specifications, with such review usually limited to the technical aspects of the proposed purchase.

(2) Grantees and subgrantees must on request make available for awarding agency pre-award review procurement documents, such as requests for proposals or invitations for bids, independent cost estimates, etc. when:

(i) A grantee's or subgrantee's procurement procedures or operation fails to comply with the procurement standards in this section; or

(ii) The procurement is expected to exceed the simplified acquisition threshold and is to be awarded without competition or only one bid or offer is received in response to a solicitation; or

(iii) The procurement, which is expected to exceed the simplified acquisition threshold, specifies a ''brand name'' product; or

(iv) The proposed award is more than the simplified acquisition threshold and is to be awarded to other than the apparent low bidder under a sealed bid procurement; or

(v) A proposed contract modification changes the scope of a contract or increases the contract amount by more than the simplified acquisition threshold.

(3) A grantee or subgrantee will be exempt from the pre-award review in paragraph (g)(2) of this section if the awarding agency determines that its procurement systems comply with the standards of this section.

(i) A grantee or subgrantee may request that its procurement system be reviewed by the awarding agency to determine whether its system meets these standards in order for its system to be certified. Generally, these reviews shall occur where there is a continuous high-dollar funding, and third-party contracts are awarded on a regular basis.

(ii) A grantee or subgrantee may self-certify its procurement system. Such self-certification shall not limit the awarding agency's right to survey the system. Under a self-certification procedure, awarding agencies may wish to rely on written assurances from the grantee or subgrantee that it is complying with these standards. A grantee or subgrantee will cite specific procedures, regulations, standards, etc., as being in compliance with these requirements and have its system available for review.

(h) *Bonding requirements.* For construction or facility improvement contracts or subcontracts exceeding the simplified acquisition threshold, the awarding agency may accept the bonding policy and requirements of the grantee or subgrantee provided the awarding agency has made a determination that the awarding agency's interest is adequately protected. If such a determination has not been made, the minimum requirements shall be as follows:

(1) *A bid guarantee from each bidder equivalent to five percent of the bid price.* The ''bid guarantee'' shall consist of a firm commitment such as a bid bond, certified check, or other negotiable instrument accompanying a bid as assurance that the bidder will, upon acceptance of his bid, execute such contractual documents as may be required within the time specified.

(2) *A performance bond on the part of the contractor for 100 percent of the contract price.* A ''performance bond'' is one executed in connection with a contract to secure fulfillment of all the contractor's obligations under such contract.

(3) *A payment bond on the part of the contractor for 100 percent of the contract price.* A ''payment bond'' is one executed in connection with a contract to assure payment as required by law of all persons supplying labor and material in the execution of the work provided for in the contract.

(i) *Contract provisions.* A grantee's and subgrantee's contracts must contain provisions in paragraph (i) of this section. Federal agencies are permitted to require changes, remedies, changed conditions, access and records retention, suspension of work, and other clauses approved by the Office of Federal Procurement Policy.

(1) Administrative, contractual, or legal remedies in instances where contractors violate or breach contract terms, and provide for such sanctions and penalties as may be appropriate. (Contracts more than the simplified acquisition threshold)

(2) Termination for cause and for convenience by the grantee or subgrantee including the manner by which it will be effected and the basis for settlement. (All contracts in excess of $10,000)

(3) Compliance with Executive Order 11246 of September 24, 1965, entitled ''Equal Employment Opportunity,'' as amended by Executive Order 11375 of October 13, 1967, and as supplemented in Department of Labor regulations (41 CFR chapter 60). (All construction contracts awarded in excess of $10,000 by grantees and their contractors or subgrantees)

(4) Compliance with the Copeland ''Anti-Kickback'' Act (18 U.S.C. 874) as supplemented in Department of Labor regulations (29 CFR part 3). (All contracts and subgrants for construction or repair)

(5) Compliance with the Davis-Bacon Act (40 U.S.C. 276a to 276a–7) as supplemented by Department of Labor regulations (29 CFR part 5). (Construction contracts in excess of $2000 awarded by grantees and subgrantees when required by Federal grant program legislation)

(6) Compliance with Sections 103 and 107 of the Contract Work Hours and Safety Standards Act (40 U.S.C. 327–330) as supplemented by Department of Labor regulations (29 CFR part 5). (Construction contracts awarded by grantees and subgrantees in excess of $2000, and in excess of $2500 for other contracts which involve the employment of mechanics or laborers)

(7) Notice of awarding agency requirements and regulations pertaining to reporting.

(8) Notice of awarding agency requirements and regulations pertaining to patent rights with respect to any discovery or invention which arises or is developed in the course of or under such contract.

(9) Awarding agency requirements and regulations pertaining to copyrights and rights in data.

(10) Access by the grantee, the subgrantee, the Federal grantor agency, the Comptroller General of the United States, or any of their duly authorized representatives to any books, documents, papers, and records of the contractor which are directly pertinent to that specific contract for the purpose of making audit, examination, excerpts, and transcriptions.

(11) Retention of all required records for three years after grantees or subgrantees make final payments and all other pending matters are closed.

(12) Compliance with all applicable standards, orders, or requirements issued under section 306 of the Clean Air Act (42 U.S.C. 1857(h)), section 508 of the Clean Water Act (33 U.S.C. 1368), Executive Order 11738, and Environmental Protection Agency regulations (40 CFR part 15). (Contracts, subcontracts, and subgrants of amounts in excess of $100,000)

(13) Mandatory standards and policies relating to energy efficiency which are contained in the state energy conservation plan issued in compliance with the Energy Policy and Conservation Act (Pub. L. 94–163, 89 Stat. 871).

(j) 23 U.S.C. 112(a) directs the Secretary to require recipients of highway construction grants to use bidding methods that are ''effective in securing competition.'' Detailed construction contracting procedures are contained in 23 CFR part 635, subpart A.

(k) Section 3(a)(2)(C) of the UMT Act of 1964, as amended, prohibits the use of grant or loan funds to support procurements utilizing exclusionary or discriminatory specifications.

(l) 46 U.S.C. 1241(b)(1) and 46 CFR part 381 impose cargo preference requirements on the shipment of foreign made goods.

(m) Section 165 of the Surface Transportation Assistance Act of 1982, 49 U.S.C. 1601, section 337 of the Surface Transportation and Uniform Relocation Assistance Act of 1987, and 49 CFR parts 660 and 661 impose Buy America provisions on the procurement of foreign products and materials.

(n) Section 105(f) of the Surface Transportation Assistance Act of 1982, section 106(c) of the Surface Transportation and Uniform Relocation Assistance Act of 1987, and 49 CFR part 23 impose requirements for the participation of disadvantaged business enterprises.

(o) Section 308 of the Surface Transportation Assistance Act of 1982, 49 U.S.C. 1068(b)(2), authorizes the use of competitive negotiation for the purchase of rolling stock as appropriate.

(p) 23 U.S.C. 112(b) provides for an exemption to competitive bidding requirements for highway construction contracts in emergency situations.

(q) 23 U.S.C. 112 requires concurrence by the Secretary before highway construction contracts can be awarded, except for projects authorized under the provisions of 23 U.S.C. 171.

(r) 23 U.S.C. 112(e) requires standardized contract clauses concerning site conditions, suspension or work, and material changes in the scope of the work for highway construction contracts.

(s) 23 U.S.C. 140(b) authorizes the preferential employment of Indians on Indian Reservation road projects and contracts.

(t) FHWA, UMTA, and Federal Aviation Administration (FAA) grantees and subgrantees shall extend the use of qualifications-based (e.g., architectural and engineering services) contract selection procedures to certain other related areas and shall award such contracts in the same manner as Federal contracts for architectural and engineering services are negotiated under Title IX of the Federal Property and Administrative Services Act of 1949, or equivalent State (or airport sponsor for FAA) qualifications-based requirements. For FHWA and UMTA programs, this provision applies except to the extent that a State adopts or has adopted by statute a formal procedure for the procurement of such services.

[53 FR 8086 and 8087, Mar. 11, 1988, as amended at 53 FR 8087, Mar. 11, 1988; 60 FR 19639, 19647, Apr. 19, 1995]

§ 18.37 Subgrants.

(a) *States.* States shall follow state law and procedures when awarding and administering subgrants (whether on a cost reimbursement or fixed amount basis) of financial assistance to local and Indian tribal governments. States shall:

(1) Ensure that every subgrant includes any clauses required by Federal statute and executive orders and their implementing regulations;

(2) Ensure that subgrantees are aware of requirements imposed upon them by Federal statute and regulation;

(3) Ensure that a provision for compliance with §18.42 is placed in every cost reimbursement subgrant; and

(4) Conform any advances of grant funds to subgrantees substantially to the same standards of timing and amount that apply to cash advances by Federal agencies.

(b) *All other grantees.* All other grantees shall follow the provisions of this part which are applicable to awarding agencies when awarding and administering subgrants (whether on a cost reimbursement or fixed amount basis) of financial assistance to local and Indian tribal governments. Grantees shall:

(1) Ensure that every subgrant includes a provision for compliance with this part;

(2) Ensure that every subgrant includes any clauses required by Federal statute and executive orders and their implementing regulations; and

(3) Ensure that subgrantees are aware of requirements imposed upon them by Federal statutes and regulations.

(c) *Exceptions.* By their own terms, certain provisions of this part do not apply to the award and administration of subgrants:

(1) Section 18.10;

(2) Section 18.11;

(3) The letter-of-credit procedures specified in Treasury Regulations at 31 CFR part 205, cited in §18.21; and

(4) Section 18.50.

REPORTS, RECORDS, RETENTION, AND ENFORCEMENT

§ 18.40 Monitoring and reporting program performance.

(a) *Monitoring by grantees.* Grantees are responsible for managing the day-to-day operations of grant and subgrant supported activities. Grantees must monitor grant and subgrant supported activities to assure compliance with applicable Federal requirements and that performance goals are being achieved. Grantee monitoring must cover each program, function or activity.

(b) *Nonconstruction performance reports.* The Federal agency may, if it decides that performance information available from subsequent applications contains sufficient information to meet its programmatic needs, require the grantee to submit a performance report only upon expiration or termination of grant support. Unless waived by the Federal agency this report will be due on the same date as the final Financial Status Report.

(1) Grantees shall submit annual performance reports unless the awarding agency requires quarterly or semi-annual reports. However, performance reports will not be required more frequently than quarterly. Annual reports shall be due 90 days after the grant year, quarterly or semi-annual reports shall be due 30 days after the reporting period. The final performance report will be due 90 days after the expiration or termination of grant support. If a justified request is submitted by a grantee, the Federal agency may extend the due date for any performance report. Additionally, requirements for unnecessary performance reports may be waived by the Federal agency.

(2) Performance reports will contain, for each grant, brief information on the following:

(i) A comparison of actual accomplishments to the objectives established for the period. Where the output of the project can be quantified, a computation of the cost per unit of output may be required if that information will be useful.

(ii) The reasons for slippage if established objectives were not met.

(iii) Additional pertinent information including, when appropriate, analysis and explanation of cost overruns or high unit costs.

(3) Grantees will not be required to submit more than the original and two copies of performance reports.

(4) Grantees will adhere to the standards in this section in prescribing performance reporting requirements for subgrantees.

(c) *Construction performance reports.* For the most part, on-site technical inspections and certified percentage-of-completion data are relied on heavily by Federal agencies to monitor progress under construction grants and subgrants. The Federal agency will require additional formal performance reports only when considered necessary, and never more frequently than quarterly.

(1) Section 12(h) of the UMT Act of 1964, as amended, requires pre-award testing of new buses models.

(2) [Reserved]

(d) *Significant developments.* Events may occur between the scheduled performance reporting dates which have significant impact upon the grant or subgrant supported activity. In such cases, the grantee must inform the Federal agency as soon as the following types of conditions become known:

(1) Problems, delays, or adverse conditions which will materially impair the ability to meet the objective of the award. This disclosure must include a statement of the action taken, or contemplated, and any assistance needed to resolve the situation.

(2) Favorable developments which enable meeting time schedules and objectives sooner or at less cost than anticipated or producing more beneficial results than originally planned.

(e) Federal agencies may make site visits as warranted by program needs.

(f) *Waivers, extensions.* (1) Federal agencies may waive any performance report required by this part if not needed.

(2) The grantee may waive any performance report from a subgrantee when not needed. The grantee may extend the due date for any performance report from a subgrantee if the grantee will still be able to meet its performance reporting obligations to the Federal agency.

[53 FR 8086 and 8087, Mar. 11, 1988, as amended at 53 FR 8087, Mar. 11, 1988]

§ 18.41 Financial reporting.

(a) *General.* (1) Except as provided in paragraphs (a) (2) and (5) of this section, grantees will use only the forms specified in paragraphs (a) through (e) of this section, and such supplementary or other forms as may from time to time be authorized by OMB, for:

(i) Submitting financial reports to Federal agencies, or

(ii) Requesting advances or reimbursements when letters of credit are not used.

(2) Grantees need not apply the forms prescribed in this section in dealing with their subgrantees. However, grantees shall not impose more burdensome requirements on subgrantees.

(3) Grantees shall follow all applicable standard and supplemental Federal agency instructions approved by OMB to the extent required under the Paperwork Reduction Act of 1980 for use in connection with forms specified in paragraphs (b) through (e) of this section. Federal agencies may issue substantive supplementary instructions only with the approval of OMB. Federal agencies may shade out or instruct the grantee to disregard any line item that the Federal agency finds unnecessary for its decisionmaking purposes.

(4) Grantees will not be required to submit more than the original and two copies of forms required under this part.

(5) Federal agencies may provide computer outputs to grantees to expedite or contribute to the accuracy of reporting. Federal agencies may accept the required information from grantees in machine usable format or computer printouts instead of prescribed forms.

(6) Federal agencies may waive any report required by this section if not needed.

(7) Federal agencies may extend the due date of any financial report upon receiving a justified request from a grantee.

(b) *Financial Status Report*—(1) *Form.* Grantees will use Standard Form 269 or 269A, Financial Status Report, to report the status of funds for all nonconstruction grants and for construction grants when required in accordance with § 18.41(e)(2)(iii).

(2) *Accounting basis.* Each grantee will report program outlays and program income on a cash or accrual basis as prescribed by the awarding agency. If the Federal agency requires accrual information and the grantee's accounting records are not normally kept on the accural basis, the grantee shall not be required to convert its accounting system but shall develop such accrual information through and analysis of the documentation on hand.

(3) *Frequency.* The Federal agency may prescribe the frequency of the report for each project or program. However, the report will not be required more frequently than quarterly. If the Federal agency does not specify the frequency of the report, it will be submitted annually. A final report will be required upon expiration or termination of grant support.

(4) *Due date.* When reports are required on a quarterly or semiannual basis, they will be due 30 days after the reporting period. When required on an annual basis, they will be due 90 days after the grant year. Final reports will be due 90 days after the expiration or termination of grant support.

(c) *Federal Cash Transactions Report*—(1) *Form.* (i) For grants paid by letter or credit, Treasury check advances or electronic transfer of funds, the grantee will submit the Standard Form 272, Federal Cash Transactions Report, and when necessary, its continuation sheet, Standard Form 272a, unless the terms of the award exempt the grantee from this requirement.

(ii) These reports will be used by the Federal agency to monitor cash advanced to grantees and to obtain disbursement or outlay information for each grant from grantees. The format of the report may be adapted as appropriate when reporting is to be accomplished with the assistance of automatic data processing equipment provided that the information to be submitted is not changed in substance.

(2) *Forecasts of Federal cash requirements.* Forecasts of Federal cash requirements may be required in the ''Remarks'' section of the report.

(3) *Cash in hands of subgrantees.* When considered necessary and feasible by the Federal agency, grantees may be required to report the amount of cash advances in excess of three days needs in the hands of their subgrantees or contractors and to provide short narrative explanations of actions taken by the grantee to reduce the excess balances.

(4) *Frequency and due date.* Grantees must submit the report no later than 15 working days following the end of each quarter. However, where an advance either by letter of credit or electronic transfer of funds is authorized at an annualized rate of one million dollars or more, the Federal agency may require the report to be submitted within 15 working days following the end of each month.

(d) *Request for advance or reimbursement*—(1) *Advance payments.* Requests for Treasury check advance payments will be submitted on Standard Form 270, Request for Advance or Reimbursement. (This form will not be used for drawdowns under a letter of credit, electronic funds transfer or when Treasury check advance payments are made to the grantee automatically on a predetermined basis.)

(2) *Reimbursements.* Requests for reimbursement under nonconstruction grants will also be submitted on Standard Form 270. (For reimbursement requests under construction grants, see paragraph (e)(1) of this section.)

(3) The frequency for submitting payment requests is treated in § 18.41(b)(3).

(e) *Outlay report and request for reimbursement for construction programs*—(1) *Grants that support construction activities paid by reimbursement method.* (i) Requests for reimbursement under construction grants will be submitted on Standard Form 271, Outlay Report and Request for Reimbursement for Construction Programs. Federal agencies may, however, prescribe the Request for Advance or Reimbursement form, specified in § 18.41(d), instead of this form.

(ii) The frequency for submitting reimbursement requests is treated in § 18.41(b)(3).

(2) *Grants that support construction activities paid by letter of credit, electronic funds transfer or Treasury check advance.* (i) When a construction grant is paid by letter of credit, electronic funds transfer or Treasury check advances, the grantee will report its outlays to the Federal agency using Standard Form 271, Outlay Report and Request for Reimbursement for Construction Programs. The Federal agency will provide any necessary special instruction. However, frequency and due date shall be governed by § 18.41(b)(3) and (4).

(ii) When a construction grant is paid by Treasury check advances based on periodic requests from the grantee, the advances will be requested on the form specified in § 18.41(d).

(iii) The Federal agency may substitute the Financial Status Report specified in § 18.41(b) for the Outlay Report and Request for Reimbursement for Construction Programs.

(3) *Accounting basis.* The accounting basis for the Outlay Report and Request for Reimbursement for Construction Programs shall be governed by §18.41(b)(2).

(f) Notwithstanding the provisions of paragraphs (a)(1) of this section, recipients of FHWA and National Highway Traffic Safety Administration (NHTSA) grants shall use FHWA, NHTSA or State financial reports.

[53 FR 8086 and 8087, Mar. 11, 1988, as amended at 53 FR 8087, Mar. 11, 1988]

§18.42 Retention and access requirements for records.

(a) *Applicability.* (1) This section applies to all financial and programmatic records, supporting documents, statistical records, and other records of grantees or subgrantees which are:

(i) Required to be maintained by the terms of this part, program regulations or the grant agreement, or

(ii) Otherwise reasonably considered as pertinent to program regulations or the grant agreement.

(2) This section does not apply to records maintained by contractors or subcontractors. For a requirement to place a provision concerning records in certain kinds of contracts, see §18.36(i)(10).

(b) *Length of retention period.* (1) Except as otherwise provided, records must be retained for three years from the starting date specified in paragraph (c) of this section.

(2) If any litigation, claim, negotiation, audit or other action involving the records has been started before the expiration of the 3-year period, the records must be retained until completion of the action and resolution of all issues which arise from it, or until the end of the regular 3-year period, whichever is later.

(3) To avoid duplicate recordkeeping, awarding agencies may make special arrangements with grantees and subgrantees to retain any records which are continuously needed for joint use. The awarding agency will request transfer of records to its custody when it determines that the records possess long-term retention value. When the records are transferred to or maintained by the Federal agency, the 3-year retention requirement is not applicable to the grantee or subgrantee.

(c) *Starting date of retention period*—(1) *General.* When grant support is continued or renewed at annual or other intervals, the retention period for the records of each funding period starts on the day the grantee or subgrantee submits to the awarding agency its single or last expenditure report for that period. However, if grant support is continued or renewed quarterly, the retention period for each year's records starts on the day the grantee submits its expenditure report for the last quarter of the Federal fiscal year. In all other cases, the retention period starts on the day the grantee submits its final expenditure report. If an expenditure report has been waived, the retention period starts on the day the report would have been due.

(2) *Real property and equipment records.* The retention period for real property and equipment records starts from the date of the disposition or replacement or transfer at the direction of the awarding agency.

(3) *Records for income transactions after grant or subgrant support.* In some cases grantees must report income after the period of grant support. Where there is such a requirement, the retention period for the records pertaining to the earning of the income starts from the end of the grantee's fiscal year in which the income is earned.

(4) *Indirect cost rate proposals, cost allocations plans, etc.* This paragraph applies to the following types of documents, and their supporting records: indirect cost rate computations or proposals, cost allocation plans, and any similar accounting computations of the rate at which a particular group of costs is chargeable (such as computer usage chargeback rates or composite fringe benefit rates).

(i) *If submitted for negotiation.* If the proposal, plan, or other computation is required to be submitted to the Federal Government (or to the grantee) to form the basis for negotiation of the rate, then the 3-year retention period for its supporting records starts from the date of such submission.

(ii) *If not submitted for negotiation.* If the proposal, plan, or other computation is not required to be submitted to

the Federal Government (or to the grantee) for negotiation purposes, then the 3-year retention period for the proposal plan, or computation and its supporting records starts from theend of the fiscal year (or other accounting period) covered by the proposal, plan, or other computation.

(d) *Substitution of microfilm.* Copies made by microfilming, photocopying, or similar methods may be substituted for the original records.

(e) *Access to records*—(1) *Records of grantees and subgrantees.* The awarding agency and the Comptroller General of the United States, or any of their authorized representatives, shall have the right of access to any pertinent books, documents, papers, or other records of grantees and subgrantees which are pertinent to the grant, in order to make audits, examinations, excerpts, and transcripts.

(2) *Expiration of right of access.* The right of access in this section must not be limited to the required retention period but shall last as long as the records are retained.

(f) *Restrictions on public access.* The Federal Freedom of Information Act (5 U.S.C. 552) does not apply to records unless required by Federal, State, or local law, grantees and subgrantees are not required to permit public access to their records.

§ 18.43 Enforcement.

(a) *Remedies for noncompliance.* If a grantee or subgrantee materially fails to comply with any term of an award, whether stated in a Federal statute or regulation, an assurance, in a State plan or application, a notice of award, or elsewhere, the awarding agency may take one or more of the following actions, as appropriate in the circumstances:

(1) Temporarily withhold cash payments pending correction of the deficiency by the grantee or subgrantee or more severe enforcement action by the awarding agency,

(2) Disallow (that is, deny both use of funds and matching credit for) all or part of the cost of the activity or action not in compliance,

(3) Wholly or partly suspend or terminate the current award for the grantee's or subgrantee's program,

(4) Withhold further awards for the program, or

(5) Take other remedies that may be legally available.

(b) *Hearings, appeals.* In taking an enforcement action, the awarding agency will provide the grantee or subgrantee an opportunity for such hearing, appeal, or other administrative proceeding to which the grantee or subgrantee is entitled under any statute or regulation applicable to the action involved.

(c) *Effects of suspension and termination.* Costs of grantee or subgrantee resulting from obligations incurred by the grantee or subgrantee during a suspension or after termination of an award are not allowable unless the awarding agency expressly authorizes them in the notice of suspension or termination or subsequently. Other grantee or subgrantee costs during suspension or after termination which are necessary and not reasonably avoidable are allowable if:

(1) The costs result from obligations which were properly incurred by the grantee or subgrantee before the effective date of suspension or termination, are not in anticipation of it, and, in the case of a termination, are noncancellable, and,

(2) The costs would be allowable if the award were not suspended or expired normally at the end of the funding period in which the termination takes effect.

(d) *Relationship to debarment and suspension.* The enforcement remedies identified in this section, including suspension and termination, do not preclude grantee or subgrantee from being subject to ''Debarment and Suspension'' under E.O. 12549 (see § 18.35).

§ 18.44 Termination for convenience.

Except as provided in § 18.43 awards may be terminated in whole or in part only as follows:

(a) By the awarding agency with the consent of the grantee or subgrantee in which case the two parties shall agree upon the termination conditions, including the effective date and in the case of partial termination, the portion to be terminated, or

(b) By the grantee or subgrantee upon written notification to the awarding agency, setting forth the reasons for such termination, the effective date, and in the case of partial termination, the portion to be terminated. However, if, in the case of a partial termination, the awarding agency determines that the remaining portion of the award will not accomplish the purposes for which the award was made, the awarding agency may terminate the award in its entirety under either §18.43 or paragraph (a) of this section.

Subpart D—After-The-Grant Requirements

§18.50 Closeout.

(a) *General.* The Federal agency will close out the award when it determines that all applicable administrative actions and all required work of the grant has been completed.

(b) *Reports.* Within 90 days after the expiration or termination of the grant, the grantee must submit all financial, performance, and other reports required as a condition of the grant. Upon request by the grantee, Federal agencies may extend this timeframe. These may include but are not limited to:

(1) *Final performance or progress report.*

(2) *Financial Status Report (SF 269) or Outlay Report and Request for Reimbursement for Construction Programs (SF–271) (as applicable).*

(3) *Final request for payment (SF–270) (if applicable).*

(4) *Invention disclosure (if applicable).*

(5) *Federally-owned property report:*

In accordance with §18.32(f), a grantee must submit an inventory of all federally owned property (as distinct from property acquired with grant funds) for which it is accountable and request disposition instructions from the Federal agency of property no longer needed.

(c) *Cost adjustment.* The Federal agency will, within 90 days after receipt of reports in paragraph (b) of this section, make upward or downward adjustments to the allowable costs.

(d) *Cash adjustments.* (1) The Federal agency will make prompt payment to the grantee for allowable reimbursable costs.

(2) The grantee must immediately refund to the Federal agency any balance of unobligated (unencumbered) cash advanced that is not authorized to be retained for use on other grants.

§18.51 Later disallowances and adjustments.

The closeout of a grant does not affect:

(a) The Federal agency's right to disallow costs and recover funds on the basis of a later audit or other review;

(b) The grantee's obligation to return any funds due as a result of later refunds, corrections, or other transactions;

(c) Records retention as required in §18.42;

(d) Property management requirements in §§18.31 and 18.32; and

(e) Audit requirements in §18.26.

§18.52 Collection of amounts due.

(a) Any funds paid to a grantee in excess of the amount to which the grantee is finally determined to be entitled under the terms of the award constitute a debt to the Federal Government. If not paid within a reasonable period after demand, the Federal agency may reduce the debt by:

(1) Making an adminstrative offset against other requests for reimbursements,

(2) Withholding advance payments otherwise due to the grantee, or

(3) Other action permitted by law.

(b) Except where otherwise provided by statutes or regulations, the Federal agency will charge interest on an overdue debt in accordance with the Federal Claims Collection Standards (4 CFR Ch. II). The date from which interest is computed is not extended by litigation or the filing of any form of appeal.

Subpart E—Entitlements [Reserved]

PART 19—UNIFORM ADMINISTRATIVE REQUIREMENTS FOR GRANTS AND AGREEMENTS WITH INSTITUTIONS OF HIGHER EDUCATION, HOSPITALS, AND OTHER NON-PROFIT ORGANIZATIONS

Subpart A—General

Sec.
19.1 Purpose.
19.2 Definitions.
19.3 Effect on other issuances.
19.4 Deviations.
19.5 Subawards.
19.6 Availability of material referenced in this part.

Subpart B—Pre-Award Requirements

19.10 Purpose.
19.11 Pre-award policies.
19.12 Forms for applying for Federal assistance.
19.13 Debarment and suspension.
19.14 Special award conditions.
19.15 Metric system of measurement.
19.16 Resource Conservation and Recovery Act.
19.17 Certifications and representations.

Subpart C—Post-Award Requirements

FINANCIAL AND PROGRAM MANAGEMENT

19.20 Purpose of financial and program management.
19.21 Standards for financial management systems.
19.22 Payment.
19.23 Cost sharing or matching.
19.24 Program income.
19.25 Revision of budget and program plans.
19.26 Non-Federal audits.
19.27 Allowable costs.
19.28 Period of availability of funds.

PROPERTY STANDARDS

19.30 Purpose of property standards.
19.31 Insurance coverage.
19.32 Real property.
19.33 Federally-owned and exempt property.
19.34 Equipment.
19.35 Supplies and other expendable property.
19.36 Intangible property.
19.37 Property trust relationship.

PROCUREMENT STANDARDS

19.40 Purpose of procurement standards.
19.41 Recipient responsibilities.
19.42 Codes of conduct.
19.43 Competition.
19.44 Procurement procedures.
19.45 Cost and price analysis.
19.46 Procurement records.
19.47 Contract administration.
19.48 Contract provisions.

REPORTS AND RECORDS

19.50 Purpose of reports and records.
19.51 Monitoring and reporting program performance.
19.52 Financial reporting.
19.53 Retention and access requirements for records.

TERMINATION AND ENFORCEMENT

19.60 Purpose of termination and enforcement.
19.61 Termination.
19.62 Enforcement.

Subpart D—After-the-Award Requirements

19.70 Purpose.
19.71 Closeout procedures.
19.72 Subsequent adjustments and continuing responsibilities.
19.73 Collection of amounts due.

APPENDIX A TO PART 19—CONTRACT PROVISIONS

AUTHORITY: 49 U.S.C. 322(a).

SOURCE: 59 FR 15639, Apr. 4, 1994, unless otherwise noted.

Subpart A—General

§ 19.1 Purpose.

This part establishes uniform administrative requirements for Federal grants and agreements awarded to institutions of higher education, hospitals, and other non-profit organizations. Federal awarding agencies shall not impose additional or inconsistent requirements, except as provided in §§ 19.4 and 19.14 or unless specifically required by Federal statute or executive order. Non-profit organizations that implement Federal programs for the States are also subject to State requirements.

§ 19.2 Definitions.

(a) *Accrued expenditures* means the charges incurred by the recipient during a given period requiring the provision of funds for:

(1) Goods and other tangible property received;

(2) Services performed by employees, contractors, subrecipients, and other payees; and,

(3) Other amounts becoming owed under programs for which no current services or performance is required.

(b) *Accrued income* means the sum of: (1) Earnings during a given period from:

(i) Services performed by the recipient, and

(ii) Goods and other tangible property delivered to purchasers; and

(2) Amounts becoming owed to the recipient for which no current services or performance is required by the recipient.

(c) *Acquisition cost of equipment* means the net invoice price of the equipment, including the cost of modifications, attachments, accessories, or auxiliary apparatus necessary to make the property usable for the purpose for which it was acquired. Other charges, such as the cost of installation, transportation, taxes, duty or protective in-transit insurance, shall be included or excluded from the unit acquisition cost in accordance with the recipient's regular accounting practices.

(d) *Advance* means a payment made by Treasury check or other appropriate payment mechanism to a recipient upon its request either before outlays are made by the recipient or through the use of predetermined payment schedules.

(e) *Award* means financial assistance that provides support or stimulation to accomplish a public purpose. Awards include grants and other agreements in the form of money or property in lieu of money, by the Federal Government to an eligible recipient. The term does not include: Technical assistance, which provides services instead of money; other assistance in the form of loans, loan guarantees, interest subsidies, or insurance; direct payments of any kind to individuals; and, contracts which are required to be entered into and administered under procurement laws and regulations.

(f) *Cash contributions* means the recipient's cash outlay, including the outlay of money contributed to the recipient by third parties.

(g) *Closeout* means the process by which a Federal awarding agency determines that all applicable administrative actions and all required work of the award have been completed by the recipient and Federal awarding agency.

(h) *Contract* means a procurement contract under an award or subaward, and a procurement subcontract under a recipient's or subrecipient's contract.

(i) *Cost sharing or matching* means that portion of project or program costs not borne by the Federal Government.

(j) *Date of completion* means the date on which all work under an award is completed or the date on the award document, or any supplement or amendment thereto, on which Federal sponsorship ends.

(k) *Disallowed costs* means those charges to an award that the Federal awarding agency determines to be unallowable, in accordance with the applicable Federal cost principles or other terms and conditions contained in the award.

(l) *Equipment* means tangible nonexpendable personal property including exempt property charged directly to the award having a useful life of more than one year and an acquisition cost of $5,000 or more per unit. However, consistent with recipient policy, lower limits may be established.

(m) *Excess property* means property under the control of any Federal awarding agency that, as determined by the head thereof, is no longer required for its needs or the discharge of its responsibilities.

(n) *Exempt property* means tangible personal property acquired in whole or in part with Federal funds, where the Federal awarding agency has statutory authority to vest title in the recipient without further obligation to the Federal Government. An example of exempt property authority is contained in the Federal Grant and Cooperative Agreement Act (31 U.S.C. 6306), for property acquired under an award to conduct basic or applied research by a non-profit institution of higher education or non-profit organization whose principal purpose is conducting scientific research.

(o) *Federal awarding agency* means the Federal agency that provides an award to the recipient. Except for the specific review requirements for deviations in §19.4, for Department of Transportation (DOT) awards, it means the DOT operating administration or departmental office that made the award.

(p) *Federal funds authorized* means the total amount of Federal funds obligated by the Federal Government for use by the recipient. This amount may include any authorized carryover of unobligated funds from prior funding periods when permitted by agency regulations or agency implementing instructions.

(q) *Federal share* of real property, equipment, or supplies means that percentage of the property's acquisition costs and any improvement expenditures paid with Federal funds.

(r) *Funding period* means the period of time when Federal funding is available for obligation by the recipient.

(s) *Intangible property and debt instruments* means, but is not limited to, trademarks, copyrights, patents and patent applications and such property as loans, notes and other debt instruments, lease agreements, stock and other instruments of property ownership, whether considered tangible or intangible.

(t) *Obligations* means the amounts of orders placed, contracts and grants awarded, services received and similar transactions during a given period that require payment by the recipient during the same or a future period.

(u) *Outlays or expenditures* means charges made to the project or program. They may be reported on a cash or accrual basis. For reports prepared on a cash basis, outlays are the sum of cash disbursements for direct charges for goods and services, the amount of indirect expense charged, the value of third party in-kind contributions applied and the amount of cash advances and payments made to subrecipients. For reports prepared on an accrual basis, outlays are the sum of cash disbursements for direct charges for goods and services, the amount of indirect expense incurred, the value of in-kind contributions applied, and the net increase (or decrease) in the amounts owed by the recipient for goods and other property received, for services performed by employees, contractors, subrecipients and other payees and other amounts becoming owed under programs for which no current services or performance are required.

(v) *Personal property* means property of any kind except real property. It may be tangible, having physical existence, or intangible, having no physical existence, such as copyrights, patents, or securities.

(w) *Prior approval* means written approval by an authorized official evidencing prior consent.

(x) *Program income* means gross income earned by the recipient that is directly generated by a supported activity or earned as a result of the award (see exclusions in §§ 19.24 (e) and (h)). Program income includes, but is not limited to, income from fees for services performed, the use or rental of real or personal property acquired under federally-funded projects, the sale of commodities or items fabricated under an award, license fees and royalties on patents and copyrights, and interest on loans made with award funds. Interest earned on advances of Federal funds is not program income. Except as otherwise provided in Federal awarding agency regulations or the terms and conditions of the award, program income does not include the receipt of principal on loans, rebates, credits, discounts, etc., or interest earned on any of them.

(y) *Project costs* means all allowable costs, as set forth in the applicable Federal cost principles, incurred by a recipient and the value of the contributions made by third parties in accomplishing the objectives of the award during the project period.

(z) *Project period* means the period established in the award document during which Federal sponsorship begins and ends.

(aa) *Property* means, unless otherwise stated, real property, equipment, intangible property and debt instruments.

(bb) *Real property* means land, including land improvements, structures and appurtenances thereto, but excludes movable machinery and equipment.

(cc) *Recipient* means an organization receiving financial assistance directly from Federal awarding agencies to carry out a project or program. The term includes public and private institutions of higher education, public and private hospitals, and other quasi-public and private non-profit organizations such as, but not limited to, community action agencies, research institutes,

educational associations, and health centers. The term may include commercial organizations, foreign or international organizations (such as agencies of the United Nations) which are recipients, subrecipients, or contractors or subcontractors of recipients or subrecipients at the discretion of the Federal awarding agency. The term does not include government-owned contractor-operated facilities or research centers providing continued support for mission-oriented, large-scale programs that are government-owned or controlled, or are designated as federally-funded research and development centers.

(dd) *Research and development* means all research activities, both basic and applied, and all development activities that are supported at universities, colleges, and other non-profit institutions. ''Research'' is defined as a systematic study directed toward fuller scientific knowledge or understanding of the subject studied. ''Development'' is the systematic use of knowledge and understanding gained from research directed toward the production of useful materials, devices, systems, or methods, including design and development of prototypes and processes. The term research also includes activities involving the training of individuals in research techniques where such activities utilize the same facilities as other research and development activities and where such activities are not included in the instruction function.

(ee) *Small awards* means a grant or cooperative agreement not exceeding the small purchase threshold fixed at 41 U.S.C. 403(11) (currently $25,000).

(ff) *Subaward* means an award of financial assistance in the form of money, or property in lieu of money, made under an award by a recipient to an eligible subrecipient or by a subrecipient to a lower tier subrecipient. The term includes financial assistance when provided by any legal agreement, even if the agreement is called a contract, but does not include procurement of goods and services nor does it include any form of assistance which is excluded from the definition of ''award'' in paragraph (e) of this section.

(gg) *Subrecipient* means the legal entity to which a subaward is made and which is accountable to the recipient for the use of the funds provided. The term may include foreign or international organizations (such as agencies of the United Nations) at the discretion of the Federal awarding agency.

(hh) *Supplies* means all personal property excluding equipment, intangible property, and debt instruments as defined in this section, and inventions of a contractor conceived or first actually reduced to practice in the performance of work under a funding agreement (''subject inventions''), as defined in 37 CFR part 401, ''Rights to Inventions Made by Nonprofit Organizations and Small Business Firms Under Government Grants, Contracts, and Cooperative Agreements.''

(ii) *Suspension* means an action by a Federal awarding agency that temporarily withdraws Federal sponsorship under an award, pending corrective action by the recipient or pending a decision to terminate the award by the Federal awarding agency. Suspension of an award is a separate action from suspension under Federal agency regulations implementing E.O.s 12549 and 12689, ''Debarment and Suspension.''

(jj) *Termination* means the cancellation of Federal sponsorship, in whole or in part, under an agreement at any time prior to the date of completion.

(kk) *Third party in-kind contributions* means the value of non-cash contributions provided by non-Federal third parties. Third party in-kind contributions may be in the form of real property, equipment, supplies and other expendable property, and the value of goods and services directly benefiting and specifically identifiable to the project or program.

(ll) *Unliquidated obligations*, for financial reports prepared on a cash basis, means the amount of obligations incurred by the recipient that have not been paid. For reports prepared on an accrued expenditure basis, they represent the amount of obligations incurred by the recipient for which an outlay has not been recorded.

(mm) *Unobligated balance* means the portion of the funds authorized by the Federal awarding agency that has not

been obligated by the recipient and is determined by deducting the cumulative obligations from the cumulative funds authorized.

(nn) *Unrecovered indirect cost* means the difference between the amount awarded and the amount which could have been awarded under the recipient's approved negotiated indirect cost rate.

(oo) *Working capital advance* means a procedure whereby funds are advanced to the recipient to cover its estimated disbursement needs for a given initial period.

§ 19.3 Effect on other issuances.

For awards subject to this part, all administrative requirements of codified program regulations, program manuals, handbooks and other non-regulatory materials which are inconsistent with the requirements of this part are superseded, except to the extent they are required by statute, or authorized in accordance with the deviations provision in § 19.4.

§ 19.4 Deviations.

The Office of Management and Budget (OMB) may grant exceptions for classes of grants or recipients subject to the requirements of this part when exceptions are not prohibited by statute. However, in the interest of maximum uniformity, exceptions from the requirements of this part shall be permitted only in unusual circumstances. Federal awarding agencies may apply more restrictive requirements to a class of recipients when approved by OMB. All requests for class deviations shall be processed through the Assistant Secretary for Administration. Federal awarding agencies may apply less restrictive requirements when awarding small awards, except for those requirements which are statutory, subject to the concurrence of the Assistant Secretary for Administration. Exceptions on a case-by-case basis may also be made by Federal awarding agencies, with the concurrence of the Assistant Secretary for Administration to ensure conformance with Department of Transportation grant administration policies.

§ 19.5 Subawards.

Unless sections of this part specifically exclude subrecipients from coverage, the provisions of this part shall be applied to subrecipients performing work under awards if such subrecipients are institutions of higher education, hospitals or other non-profit organizations. State and local government subrecipients are subject to the provisions of 49 CFR part 18, ''Uniform Administrative Requirements for Grants and Cooperative Agreements to State and Local Governments.''

§ 19.6 Availability of material referenced in this part.

(a) Copies of Federal Transit Administration (FTA) documents identified in this part may be obtained by calling the FTA Administrative Services Division at (202) 366–4865.

(b) Copies of Federal Aviation Administration (FAA) documents identified in this part may be obtained by calling the FAA Program Guidance Branch at (202) 267–3831.

Subpart B—Pre-Award Requirements

§ 19.10 Purpose.

Sections 19.11 through 19.17 prescribes forms and instructions and other pre-award matters to be used in applying for Federal awards.

§ 19.11 Pre-award policies.

(a) *Use of grants and cooperative agreements, and contracts.* In each instance, the Federal awarding agency shall decide on the appropriate award instrument (i.e., grant, cooperative agreement, or contract). The Federal Grant and Cooperative Agreement Act (31 U.S.C. 6301–08) governs the use of grants, cooperative agreements and contracts. A grant or cooperative agreement shall be used only when the principal purpose of a transaction is to accomplish a public purpose of support or stimulation authorized by Federal statute. The statutory criterion for choosing between grants and cooperative agreements is that for the latter, ''substantial involvement is expected between the executive agency and the

State, local government, or other recipient when carrying out the activity contemplated in the agreement.'' Contracts shall be used when the principal purpose is acquisition of property or services for the direct benefit or use of the Federal Government.

(b) *Public notice and priority setting.* Federal awarding agencies shall notify the public of its intended funding priorities for discretionary grant programs, unless funding priorities are established by Federal statute.

§ 19.12 Forms for applying for Federal assistance.

(a) Federal awarding agencies shall comply with the applicable report clearance requirements of 5 CFR part 1320, ''Controlling Paperwork Burdens on the Public,'' with regard to all forms used by the Federal awarding agency in place of or as a supplement to the Standard Form 424 (SF–424) series.

(b) Applicants shall use the SF–424 series or those forms and instructions prescribed by the Federal awarding agency.

(c) For Federal programs covered by E.O. 12372, ''Intergovernmental Review of Federal Programs,'' as implemented at 49 CFR part 17, Intergovernmental review of Department of Transportation programs and activities, the applicant shall complete the appropriate sections of the SF–424 (Application for Federal Assistance) indicating whether the application was subject to review by the State Single Point of Contact (SPOC). The name and address of the SPOC for a particular State can be obtained from the Federal awarding agency or the Catalog of Federal Domestic Assistance. The SPOC shall advise the applicant whether the program for which application is made has been selected by that State for review.

(d) Federal awarding agencies that do not use the SF–424 form should indicate whether the application is subject to review by the State under E.O. 12372.

§ 19.13 Debarment and suspension.

Federal awarding agencies and recipients shall comply with the nonprocurement debarment and suspension rule, 49 CFR part 29, ''Governmentwide Debarment and Suspension (Nonprocurement) and Governmentwide Requirements for Drug-Free Workplace (Grants),'' implementing E.O.s 12549 and 12689, ''Debarment and Suspension.'' This rule restricts subawards and contracts with certain parties that are debarred, suspended or otherwise excluded from or ineligible for participation in Federal assistance programs or activities.

§ 19.14 Special award conditions.

(a) Federal awarding agencies may impose additional requirements as needed, if an applicant or recipient:

(1) Has a history of poor performance,

(2) Is not financially stable,

(3) Has a management system that does not meet the standards prescribed in this part,

(4) Has not conformed to the terms and conditions of a previous award, or

(5) Is not otherwise responsible.

(b) Additional requirements may only be imposed provided that such applicant or recipient is notified in writing as to:

(1) The nature of the additional requirements,

(2) The reason why the additional requirements are being imposed,

(3) The nature of the corrective action needed,

(4) The time allowed for completing the corrective actions, and

(5) The method for requesting reconsideration of the additional requirements imposed.

(c) A copy of such notices shall be sent to the Assistant Secretary for Administration. Any special conditions shall be promptly removed once the conditions that prompted them have been corrected.

§ 19.15 Metric system of measurement.

The Metric Conversion Act, as amended by the Omnibus Trade and Competitiveness Act (15 U.S.C. 205), declares that the metric system is the preferred measurement system for U.S. trade and commerce. The Act requires each Federal agency to establish a date or dates in consultation with the Secretary of Commerce, when the metric system of measurement will be used in the agency's procurements, grants, and other business-related activities. Metric implementation may take longer

where the use of the system is initially impractical or likely to cause significant inefficiencies in the accomplishment of federally-funded activities. Federal awarding agencies shall follow the provisions of E.O. 12770, ''Metric Usage in Federal Government Programs.''

§ 19.16 Resource Conservation and Recovery Act.

Under the Act, any State agency or agency of a political subdivision of a State which is using appropriated Federal funds must comply with section 6002. Section 6002 requires that preference be given in procurement programs to the purchase of specific products containing recycled materials identified in guidelines developed by the Environmental Protection Agency (EPA) (40 CFR parts 247–254). Accordingly, State and local institutions of higher education, hospitals, and nonprofit organizations that receive direct Federal awards or other Federal funds shall give preference in their procurement programs funded with Federal funds to the purchase of recycled products pursuant to the EPA guidelines.

§ 19.17 Certifications and representations.

Unless prohibited by statute or codified regulation, each Federal awarding agency is authorized and encouraged to allow recipients to submit certifications and representations required by statute, executive order, or regulation on an annual basis, if the recipients have ongoing and continuing relationships with the agency. Annual certifications and representations shall be signed by responsible officials with the authority to ensure recipients' compliance with the pertinent requirements.

Subpart C—Post-Award Requirements

FINANCIAL AND PROGRAM MANAGEMENT

§ 19.20 Purpose of financial and program management.

Sections 19.21 through 19.28 prescribe standards for financial management systems, methods for making payments and rules for: satisfying cost sharing and matching requirements, accounting for program income, budget revision approvals, making audits, determining allowability of cost, and establishing fund availability.

§ 19.21 Standards for financial management systems.

(a) Federal awarding agencies shall require recipients to relate financial data to performance data and develop unit cost information whenever practical.

(b) Recipients' financial management systems shall provide for the following.

(1) Accurate, current and complete disclosure of the financial results of each federally-sponsored project or program in accordance with the reporting requirements set forth in § 19.52. If a Federal awarding agency requires reporting on an accrual basis from a recipient that maintains its records on other than an accrual basis, the recipient shall not be required to establish an accrual accounting system. These recipients may develop such accrual data for its reports on the basis of an analysis of the documentation on hand.

(2) Records that identify adequately the source and application of funds for federally-sponsored activities. These records shall contain information pertaining to Federal awards, authorizations, obligations, unobligated balances, assets, outlays, income and interest.

(3) Effective control over and accountability for all funds, property and other assets. Recipients shall adequately safeguard all such assets and assure they are used solely for authorized purposes.

(4) Comparison of outlays with budget amounts for each award. Whenever appropriate, financial information should be related to performance and unit cost data.

(5) Written procedures to minimize the time elapsing between the transfer of funds to the recipient from the U.S. Treasury and the issuance or redemption of checks, warrants or payments by other means for program purposes by the recipient. To the extent that the provisions of the Cash Management Improvement Act (CMIA) (Pub. L. 101–453) govern, payment methods of State agencies, instrumentalities, and fiscal agents shall be consistent with CMIA

Treasury-State Agreements or the CMIA default procedures codified at 31 CFR part 205, ''Withdrawal of Cash from the Treasury for Advances under Federal Grant and Other Programs.''

(6) Written procedures for determining the reasonableness, allocability and allowability of costs in accordance with the provisions of the applicable Federal cost principles and the terms and conditions of the award.

(7) Accounting records including cost accounting records that are supported by source documentation.

(c) Where the Federal Government guarantees or insures the repayment of money borrowed by the recipient, the Federal awarding agency, at its discretion, may require adequate bonding and insurance if the bonding and insurance requirements of the recipient are not deemed adequate to protect the interest of the Federal Government.

(d) The Federal awarding agency may require adequate fidelity bond coverage where the recipient lacks sufficient coverage to protect the Federal Government's interest.

(e) Where bonds are required in the situations described above, the bonds shall be obtained from companies holding certificates of authority as acceptable sureties, as prescribed in 31 CFR part 223, ''Surety Companies Doing Business with the United States.''

§ 19.22 Payment.

(a) Payment methods shall minimize the time elapsing between the transfer of funds from the United States Treasury and the issuance or redemption of checks, warrants, or payment by other means by the recipients. Payment methods of State agencies or instrumentalities shall be consistent with Treasury-State CMIA agreements or default procedures codified at 31 CFR part 205.

(b)(1) Recipients are to be paid in advance, provided they maintain or demonstrate the willingness to maintain:

(i) Written procedures that minimize the time elapsing between the transfer of funds and disbursement by the recipient, and

(ii) Financial management systems that meet the standards for fund control and accountability as established in section § 19.21.

(2) Cash advances to a recipient organization shall be limited to the minimum amounts needed and be timed to be in accordance with the actual, immediate cash requirements of the recipient organization in carrying out the purpose of the approved program or project. The timing and amount of cash advances shall be as close as is administratively feasible to the actual disbursements by the recipient organization for direct program or project costs and the proportionate share of any allowable indirect costs.

(c) Whenever possible, advances shall be consolidated to cover anticipated cash needs for all awards made by the Federal awarding agency to the recipient.

(1) Advance payment mechanisms include, but are not limited to, Treasury check and electronic funds transfer.

(2) Advance payment mechanisms are subject to 31 CFR part 205.

(3) Recipients shall be authorized to submit requests for advances and reimbursements at least monthly when electronic fund transfers are not used.

(d) Requests for Treasury check advance payment shall be submitted on SF–270, ''Request for Advance or Reimbursement,'' or other forms as may be authorized by OMB. This form is not to be used when Treasury check advance payments are made to the recipient automatically through the use of a predetermined payment schedule or if precluded by special Federal awarding agency instructions for electronic funds transfer.

(e) Reimbursement is the preferred method when the requirements in paragraph (b) cannot be met. Federal awarding agencies may also use this method on any construction agreement, or if the major portion of the construction project is accomplished through private market financing or Federal loans, and the Federal assistance constitutes a minor portion of the project.

(1) When the reimbursement method is used, the Federal awarding agency shall make payment within 30 days after receipt of the billing, unless the billing is improper.

(2) Recipients shall be authorized to submit request for reimbursement at

least monthly when electronic funds transfers are not used.

(f) If a recipient cannot meet the criteria for advance payments and the Federal awarding agency has determined that reimbursement is not feasible because the recipient lacks sufficient working capital, the Federal awarding agency may provide cash on a working capital advance basis. Under this procedure, the Federal awarding agency shall advance cash to the recipient to cover its estimated disbursement needs for an initial period generally geared to the awardee's disbursing cycle. Thereafter, the Federal awarding agency shall reimburse the recipient for its actual cash disbursements. The working capital advance method of payment shall not be used for recipients unwilling or unable to provide timely advances to their subrecipient to meet the subrecipient's actual cash disbursements.

(g) To the extent available, recipients shall disburse funds available from repayments to and interest earned on a revolving fund, program income, rebates, refunds, contract settlements, audit recoveries and interest earned on such funds before requesting additional cash payments.

(h) Unless otherwise required by statute, Federal awarding agencies shall not withhold payments for proper charges made by recipients at any time during the project period unless the conditions in paragraphs (h)(1) or (2) of this section apply.

(1) A recipient has failed to comply with the project objectives, the terms and conditions of the award, or Federal reporting requirements.

(2) The recipient or subrecipient is delinquent in a debt to the United States as defined in OMB Circular A–129, ''Managing Federal Credit Programs.'' Under such conditions, the Federal awarding agency may, upon reasonable notice, inform the recipient that payments shall not be made for obligations incurred after a specified date until the conditions are corrected or the indebtedness to the Federal Government is liquidated.

(i) Standards governing the use of banks and other institutions as depositories of funds advanced under awards are as follows.

(1) Except for situations described in paragraph (i)(2) of this section, Federal awarding agencies shall not require separate depository accounts for funds provided to a recipient or establish any eligibility requirements for depositories for funds provided to a recipient. However, recipients must be able to account for the receipt, obligation and expenditure of funds.

(2) Advances of Federal funds shall be deposited and maintained in insured accounts whenever possible.

(j) Consistent with the national goal of expanding the opportunities for women-owned and minority-owned business enterprises, recipients shall be encouraged to use women-owned and minority-owned banks (a bank which is owned at least 50 percent by women or minority group members).

(k) Recipients shall maintain advances of Federal funds in interest bearing accounts, unless the conditions in paragraphs (k)(1), (2) or (3) of this section apply.

(1) The recipient receives less than $120,000 in Federal awards per year.

(2) The best reasonably available interest bearing account would not be expected to earn interest in excess of $250 per year on Federal cash balances.

(3) The depository would require an average or minimum balance so high that it would not be feasible within the expected Federal and non-Federal cash resources.

(l) For those entities where CMIA and its implementing regulations do not apply, interest earned on Federal advances deposited in interest bearing accounts shall be remitted annually to Department of Health and Human Services, Payment Management System, P.O. Box 6021, Rockville, MD 20852. Interest amounts up to $250 per year may be retained by the recipient for administrative expense. In keeping with Electric Funds Transfer rules, (31 CFR part 206), interest should be remitted to the HHS Payment Management System through an electric medium such as the FEDWIRE Deposit system. Recipients which do not have this capability should use a check. State universities and hospitals shall comply with CMIA, as it pertains to interest. If an entity subject to CMIA uses its own

funds to pay pre-award costs for discretionary awards without prior written approval from the Federal awarding agency, it waives its right to recover the interest under CMIA.

(m) Except as noted elsewhere in this part, only the following forms shall be authorized for the recipients in requesting advances and reimbursements. Federal agencies shall not require more than an original and two copies of these forms.

(1) SF–270, Request for Advance or Reimbursement. Each Federal awarding agency shall adopt the SF–270 as a standard form for all nonconstruction programs when electronic funds transfer or predetermined advance methods are not used. Federal awarding agencies, however, have the option of using this form for construction programs in lieu of the SF–271, ''Outlay Report and Request for Reimbursement for Construction Programs.''

(2) SF–271, Outlay Report and Request for Reimbursement for Construction Programs. Each Federal awarding agency shall adopt the SF–271 as the standard form to be used for requesting reimbursement for construction programs. However, a Federal awarding agency may substitute the SF–270 when the Federal awarding agency determines that it provides adequate information to meet Federal needs.

§ 19.23 Cost sharing or matching.

(a) All contributions, including cash and third party in-kind, shall be accepted as part of the recipient's cost sharing or matching when such contributions meet all of the following criteria.

(1) Are verifiable from the recipient's records.

(2) Are not included as contributions for any other federally-assisted project or program.

(3) Are necessary and reasonable for proper and efficient accomplishment of project or program objectives.

(4) Are allowable under the applicable cost principles.

(5) Are not paid by the Federal Government under another award, except where authorized by Federal statute to be used for cost sharing or matching.

(6) Are provided for in the approved budget when required by the Federal awarding agency.

(7) Conform to other provisions of this part, as applicable.

(b) Unrecovered indirect costs may be included as part of cost sharing or matching only with the prior approval of the Federal awarding agency.

(c) Values for recipient contributions of services and property shall be established in accordance with the applicable cost principles. If a Federal awarding agency authorizes recipients to donate buildings or land for construction/facilities acquisition projects or long-term use, the value of the donated property for cost sharing or matching shall be the lesser of (1) or (2).

(1) The certified value of the remaining life of the property recorded in the recipient's accounting records at the time of donation.

(2) The current fair market value. However, when there is sufficient justification, the Federal awarding agency may approve the use of the current fair market value of the donated property, even if it exceeds the certified value at the time of donation to the project.

(d) Volunteer services furnished by professional and technical personnel, consultants, and other skilled and unskilled labor may be counted as cost sharing or matching if the service is an integral and necessary part of an approved project or program. Rates for volunteer services shall be consistent with those paid for similar work in the recipient's organization. In those instances in which the required skills are not found in the recipient organization, rates shall be consistent with those paid for similar work in the labor market in which the recipient competes for the kind of services involved. In either case, paid fringe benefits that are reasonable, allowable, and allocable may be included in the valuation.

(e) When an employer other than the recipient furnishes the services of an employee, these services shall be valued at the employee's regular rate of pay (plus an amount of fringe benefits that are reasonable, allowable, and allocable, but exclusive of overhead costs), provided these services are in

the same skill for which the employee is normally paid.

(f) Donated supplies may include such items as expendable equipment, office supplies, laboratory supplies or workshop and classroom supplies. Value assessed to donated supplies included in the cost sharing or matching share shall be reasonable and shall not exceed the fair market value of the property at the time of the donation.

(g) The method used for determining cost sharing or matching for donated equipment, buildings and land for which title passes to the recipient may differ according to the purpose of the award, if the conditions in paragraph (g)(1) or (2) of this section apply.

(1) If the purpose of the award is to assist the recipient in the acquisition of equipment, buildings or land, the total value of the donated property may be claimed as cost sharing or matching.

(2) If the purpose of the award is to support activities that require the use of equipment, buildings or land, normally only depreciation or use charges for equipment and buildings may be made. However, the full value of equipment or other capital assets and fair rental charges for land may be allowed, provided that the Federal awarding agency has approved the charges.

(h) The value of donated property shall be determined in accordance with the usual accounting policies of the recipient, with the following qualifications.

(1) The value of donated land and buildings shall not exceed its fair market value at the time of donation to the recipient as established by an independent appraiser (e.g., certified real property appraiser or General Services Administration representative) and certified by a responsible official of the recipient.

(2) The value of donated equipment shall not exceed the fair market value of equipment of the same age and condition at the time of donation.

(3) The value of donated space shall not exceed the fair rental value of comparable space as established by an independent appraisal of comparable space and facilities in a privately-owned building in the same locality.

(4) The value of loaned equipment shall not exceed its fair rental value.

(5) The following requirements pertain to the recipient's supporting records for in-kind contributions from third parties.

(i) Volunteer services shall be documented and, to the extent feasible, supported by the same methods used by the recipient for its own employees.

(ii) The basis for determining the valuation for personal service, material, equipment, buildings and land shall be documented.

(iii) Section 18(e) of the Federal Transit Act, as amended, (49 U.S.C. app. 1614(e)) provides that the Federal share for operating assistance shall not exceed 50 percent of the net cost. At least 50 percent of the remainder (the local share) must be derived from sources other than Federal funds or revenues of the system; and up to half of the local share may be derived from other Federal funds. For purposes of determining local share for section 18 operating assistance, the term ''Federal funds or revenues'' does not include funds received pursuant to a service agreement with a State or local service agency or a private social service organization. Nonregulatory guidance is contained in FTA Circular 9040.1B, section 18 Program Guidance and Grant Application Instructions, Chapter III, section 7.

§ 19.24 Program income.

(a) Federal awarding agencies shall apply the standards set forth in this section in requiring recipient organizations to account for program income related to projects financed in whole or in part with Federal funds.

(b) Except as provided in paragraph (h) of this section, program income earned during the project period shall be retained by the recipient and, in accordance with Federal awarding agency regulations or the terms and conditions of the award, shall be used in one or more of the ways listed in the following.

(1) Added to funds committed to the project by the Federal awarding agency and recipient and used to further eligible project or program objectives.

(2) Used to finance the non-Federal share of the project or program.

(3) Deducted from the total project or program allowable cost in determining the net allowable costs on which the Federal share of costs is based.

(c) When an agency authorizes the disposition of program income as described in paragraph (b)(1) or (b)(2) of this section, program income in excess of any limits stipulated shall be used in accordance with paragraph (b)(3) of this section.

(d) In the event that the Federal awarding agency does not specify in its regulations or the terms and conditions of the award how program income is to be used, paragraph (b)(3) of this section shall apply automatically to all projects or programs except research. For awards that support research, paragraph (b)(1) of this section shall apply automatically unless the awarding agency indicates in the terms and conditions another alternative on the award or the recipient is subject to special award conditions, as indicated in §19.14.

(e) Unless Federal awarding agency regulations or the terms and conditions of the award provide otherwise, recipients shall have no obligation to the Federal Government regarding program income earned after the end of the project period.

(f) If authorized by Federal awarding agency regulations or the terms and conditions of the award, costs incident to the generation of program income may be deducted from gross income to determine program income, provided these costs have not been charged to the award.

(g) Proceeds from the sale of property shall be handled in accordance with the requirements of the Property Standards (See §§19.30 through 19.37).

(h) Unless Federal awarding agency regulations or the terms and condition of the award provide otherwise, recipients shall have no obligation to the Federal Government with respect to program income earned from license fees and royalties for copyrighted material, patents, patent applications, trademarks, and inventions produced under an award. However, Patent and Trademark Amendments (35 U.S.C. 18) apply to inventions made under an experimental, developmental, or research award.

(i) Section 4(a) of the Federal Transit Act, as amended, (49 U.S.C. app. 1603(a)) allows FTA recipients to retain program income for allowable capital or operating expenses, but program income may not be used to refund or reduce the local share of a grant. The section 16 and 18 programs, however, operate differently. Under the special authority to set appropriate terms and conditions for the section 16(b)(2) program, program income in the form of contract service revenue may be used as local share without a proportionate reduction in the Federal share. Similarly, section 18 allows the use of program income in the form of contract service revenue as local share without requiring a proportionate reduction in the Federal share. Grantees must account for program income in their accounting systems, which are subject to audit. The accounting system must be capable of identifying program income and the purpose for which it was used. Nonregulatory guidance is contained in FTA notice N 5.5005.1, Guidance on Program Income and Sales Proceeds.

§19.25 Revision of budget and program plans.

(a) The budget plan is the financial expression of the project or program as approved during the award process. It may include either the Federal and non-Federal share, or only the Federal share, depending upon Federal awarding agency requirements. It shall be related to performance for program evaluation purposes whenever appropriate.

(b) Recipients are required to report deviations from budget and program plans, and request prior approvals for budget and program plan revisions, in accordance with this section.

(c) For nonconstruction awards, recipients shall request prior approvals from Federal awarding agencies for one or more of the following program or budget related reasons.

(1) Change in the scope or the objective of the project or program (even if there is no associated budget revision requiring prior written approval).

(2) Change in a key person specified in the application or award document.

(3) The absence for more than three months, or a 25 percent reduction in

time devoted to the project, by the approved project director or principal investigator.

(4) The need for additional Federal funding.

(5) The transfer of amounts budgeted for indirect costs to absorb increases in direct costs, or vice versa, if approval is required by the Federal awarding agency.

(6) The inclusion, unless waived by the Federal awarding agency, of costs that require prior approval in accordance with OMB Circular A–21, ''Cost Principles for Institutions of Higher Education,'' OMB Circular A–122, ''Cost Principles for Non-Profit Organizations,'' or 45 CFR part 74 Appendix E, ''Principles for Determining Costs Applicable to Research and Development under Grants and Contracts with Hospitals,'' or 48 CFR part 31, ''Contract Cost Principles and Procedures,'' as applicable.

(7) The transfer of funds allotted for training allowances (direct payment to trainees) to other categories of expense.

(8) Unless described in the application and funded in the approved awards, the subaward, transfer or contracting out of any work under an award. This provision does not apply to the purchase of supplies, material, equipment or general support services.

(d) No other prior approval requirements for specific items may be imposed unless a deviation has been approved by OMB.

(e) Except for requirements listed in paragraphs (c)(1) and (c)(4) of this section, Federal awarding agencies are authorized, at their option, to waive cost-related and administrative prior written approvals required by this part and OMB Circulars A–21 and A–122. Such waivers may include authorizing recipients to do any one or more of the following:

(1) Incur pre-award costs 90 calendar days prior to award or more than 90 calendar days with the prior approval of the Federal awarding agency. All pre-award costs are incurred at the recipient's risk (i.e., the Federal awarding agency is under no obligation to reimburse such costs if for any reason the recipient does not receive an award or if the award is less than anticipated and inadequate to cover such costs).

(2) Initiate a one-time extension of the expiration date of the award of up to 12 months unless one or more of the following conditions apply. For one-time extensions, the recipient must notify the Federal awarding agency in writing with the supporting reasons and revised expiration date at least 10 days before the expiration date specified in the award. This one-time extension may not be exercised merely for the purpose of using unobligated balances.

(i) The terms and conditions of award prohibit the extension.

(ii) The extension requires additional Federal funds.

(iii) The extension involves any change in the approved objectives or scope of the project.

(3) Carry forward unobligated balances to subsequent funding periods.

(4) For awards that support research, unless the Federal awarding agency provides otherwise in the award or in the agency's regulations, the prior approval requirements described in paragraph (e) of this section are automatically waived (i.e., recipients need not obtain such prior approvals) unless one of the conditions included in paragraph (e)(2) of this section applies.

(f) The Federal awarding agency may, at its option, restrict the transfer of funds among direct cost categories or programs, functions and activities for awards in which the Federal share of the project exceeds $100,000 and the cumulative amount of such transfers exceeds or is expected to exceed 10 percent of the total budget as last approved by the Federal awarding agency. No Federal awarding agency shall permit a transfer that would cause any Federal appropriation or part thereof to be used for purposes other than those consistent with the original intent of the appropriation.

(g) All other changes to nonconstruction budgets, except for the changes described in paragraph (j) of this section, do not require prior approval.

(h) For construction awards, recipients shall request prior written approval promptly from Federal awarding agencies for budget revisions whenever

the conditions in paragraphs (h) (1), (2) or (3) of this section apply.

(1) The revision results from changes in the scope or the objective of the project or program.

(2) The need arises for additional Federal funds to complete the project.

(3) A revision is desired which involves specific costs for which prior written approval requirements may be imposed consistent with applicable OMB cost principles listed in §19.27.

(i) No other prior approval requirements for specific items may be imposed unless a deviation has been approved by OMB.

(j) When a Federal awarding agency makes an award that provides support for both construction and nonconstruction work, the Federal awarding agency may require the recipient to request prior approval from the Federal awarding agency before making any fund or budget transfers between the two types of work supported.

(k) For both construction and nonconstruction awards, Federal awarding agencies shall require recipients to notify the Federal awarding agency in writing promptly whenever the amount of Federal authorized funds is expected to exceed the needs of the recipient for the project period by more than $5,000 or five percent of the Federal award, whichever is greater. This notification shall not be required if an application for additional funding is submitted for a continuation award.

(l) When requesting approval for budget revisions, recipients shall use the budget forms that were used in the application unless the Federal awarding agency indicates a letter of request suffices.

(m) Within 30 calendar days from the date of receipt of the request for budget revisions, Federal awarding agencies shall review the request and notify the recipient whether the budget revisions have been approved. If the revision is still under consideration at the end of 30 calendar days, the Federal awarding agency shall inform the recipient in writing of the date when the recipient may expect the decision.

§19.26 Non-Federal audits.

(a) Recipients and subrecipients that are institutions of higher education or other non-profit organizations (including hospitals) shall be subject to the audit requirements contained in the Single Audit Act Amendments of 1996 (31 U.S.C. 7501–7507) and revised OMB Circular A–133, ''Audits of States, Local Governments, and Non-Profit Organizations.''

(b) State and local governments shall be subject to the audit requirements contained in the Single Audit Act Amendments of 1996 (31 U.S.C. 7501–7507) and revised OMB Circular A–133, ''Audits of States, Local Governments, and Non-Profit Organizations.''

(c) For-profit hospitals not covered by the audit provisions of revised OMB Circular A–133 shall be subject to the audit requirements of the Federal awarding agencies.

(d) Commercial organizations shall be subject to the audit requirements of the Federal awarding agency or the prime recipient as incorporated into the award document.

[59 FR 15639, Apr. 4, 1994, as amended at 62 FR 45939, 45947, Aug. 29, 1997]

§19.27 Allowable costs.

For each kind of recipient, there is a set of Federal principles for determining allowable costs. Allowability of costs shall be determined in accordance with the cost principles applicable to the entity incurring the costs. Thus, allowability of costs incurred by State, local or federally-recognized Indian tribal governments is determined in accordance with the provisions of OMB Circular A–87, ''Cost Principles for State and Local Governments.'' The allowability of costs incurred by nonprofit organizations is determined in accordance with the provisions of OMB Circular A–122, ''Cost Principles for Non-Profit Organizations.'' The allowability of costs incurred by institutions of higher education is determined in accordance with the provisions of OMB Circular A–21, ''Cost Principles for Educational Institutions.'' The allowability of costs incurred by hospitals is determined in accordance with the provisions of Appendix E of 45 CFR part 74, ''Principles for Determining Costs Applicable to Research and Development Under Grants and Contracts with Hospitals.'' The allowability of costs incurred by commercial organizations

and those non-profit organizations listed in Attachment C to Circular A–122 is determined in accordance with the provisions of the Federal Acquisition Regulation (FAR) at 48 CFR part 31.

§ 19.28 Period of availability of funds.

Where a funding period is specified, a recipient may charge to the grant only allowable costs resulting from obligations incurred during the funding period and any pre-award costs authorized by the Federal awarding agency.

PROPERTY STANDARDS

§ 19.30 Purpose of property standards.

(a) Sections 19.31 through 19.37 set forth uniform standards governing management and disposition of property furnished by the Federal Government whose cost was charged to a project supported by a Federal award. Federal awarding agencies shall require recipients to observe these standards under awards and shall not impose additional requirements, unless specifically required by Federal statute. The recipient may use its own property management standards and procedures provided it observes the provisions of §§ 19.31 through 19.37.

(b) Transfer of capital assets. Section 12(k) of the Federal Transit Act, as amended, (49 U.S.C. app. 1608(k)) allows the transfer without compensation of real property (including land) and equipment acquired under the Act for another public purpose under certain conditions. Procedures to allow these transfers have not been issued.

§ 19.31 Insurance coverage.

Recipients shall, at a minimum, provide the equivalent insurance coverage for real property and equipment acquired with Federal funds as provided to property owned by the recipient. Federally-owned property need not be insured unless required by the terms and conditions of the award.

§ 19.32 Real property.

Each Federal awarding agency shall prescribe requirements for recipients concerning the use and disposition of real property acquired in whole or in part under awards. Unless otherwise provided by statute, such requirements, at a minimum, shall contain the following.

(a) Title to real property shall vest in the recipient subject to the condition that the recipient shall use the real property for the authorized purpose of the project as long as it is needed and shall not encumber the property without approval of the Federal awarding agency.

(b) The recipient shall obtain written approval by the Federal awarding agency for the use of real property in other federally-sponsored projects when the recipient determines that the property is no longer needed for the purpose of the original project. Use in other projects shall be limited to those under federally-sponsored projects (i.e., awards) or programs that have purposes consistent with those authorized for support by the Department of Transportation.

(c) When the real property is no longer needed as provided in paragraphs (a) and (b) of this section, the recipient shall request disposition instructions from the Federal awarding agency or its successor Federal awarding agency. The Federal awarding agency shall observe one or more of the following disposition instructions.

(1) The recipient may be permitted to retain title without further obligation to the Federal Government after it compensates the Federal Government for that percentage of the current fair market value of the property attributable to the Federal participation in the project.

(2) The recipient may be directed to sell the property under guidelines provided by the Federal awarding agency and pay the Federal Government for that percentage of the current fair market value of the property attributable to the Federal participation in the project (after deducting actual and reasonable selling and fix-up expenses, if any, from the sales proceeds). When the recipient is authorized or required to sell the property, proper sales procedures shall be established that provide for competition to the extent practicable and result in the highest possible return.

(3) The recipient may be directed to transfer title to the property to the Federal Government or to an eligible

third party provided that, in such cases, the recipient shall be entitled to compensation for its attributable percentage of the current fair market value of the property.

§ 19.33 Federally-owned and exempt property.

(a) *Federally-owned property.* (1) Title to federally-owned property remains vested in the Federal Government. Recipients shall submit annually an inventory listing of federally-owned property in their custody to the Federal awarding agency. Upon completion of the award or when the property is no longer needed, the recipient shall report the property to the Federal awarding agency for further Federal agency utilization.

(2) If the Federal awarding agency has no further need for the property, it shall be declared excess and reported to the General Services Administration, unless the Federal awarding agency has statutory authority to dispose of the property by alternative methods (e.g., the authority provided by the Federal Technology Transfer Act (15 U.S.C. 3710(I)) to donate research equipment to educational and non-profit organizations in accordance with E.O. 12821, ''Improving Mathematics and Science Education in Support of the National Education Goals.'') Appropriate instructions shall be issued to the recipient by the Federal awarding agency.

(b) *Exempt property.* When statutory authority exists, the Federal awarding agency has the option to vest title to property acquired with Federal funds in the recipient without further obligation to the Federal Government and under conditions the Federal awarding agency considers appropriate. Such property is ''exempt property.'' Should a Federal awarding agency not establish conditions, title to exempt property upon acquisition shall vest in the recipient without further obligation to the Federal Government.

§ 19.34 Equipment.

(a) Title to equipment acquired by a recipient with Federal funds shall vest in the recipient, subject to conditions of this section.

(b) The recipient shall not use equipment acquired with Federal funds to provide services to non-Federal outside organizations for a fee that is less than private companies charge for equivalent services, unless specifically authorized by Federal statute, for as long as the Federal Government retains an interest in the equipment.

(c) The recipient shall use the equipment in the project or program for which it was acquired as long as needed, whether or not the project or program continues to be supported by Federal funds and shall not encumber the property without approval of the Federal awarding agency. When no longer needed for the original project or program, the recipient shall use the equipment in connection with its other federally-sponsored activities, in the following order of priority:

(1) Activities sponsored by the Federal awarding agency which funded the original project, then

(2) Activities sponsored by other Federal awarding agencies.

(d) During the time that equipment is used on the project or program for which it was acquired, the recipient shall make it available for use on other projects or programs if such other use will not interfere with the work on the project or program for which the equipment was originally acquired. First preference for such other use shall be given to other projects or programs sponsored by the Federal awarding agency that financed the equipment; second preference shall be given to projects or programs sponsored by other Federal awarding agencies. If the equipment is owned by the Federal Government, use on other activities not sponsored by the Federal Government shall be permissible if authorized by the Federal awarding agency. User charges shall be treated as program income.

(e) When acquiring replacement equipment, the recipient may use the equipment to be replaced as trade-in or sell the equipment and use the proceeds to offset the costs of the replacement equipment subject to the approval of the Federal awarding agency.

(f) The recipient's property management standards for equipment acquired with Federal funds and federally-owned

equipment shall include all of the following.

(1) Equipment records shall be maintained accurately and shall include the following information.

(i) A description of the equipment.

(ii) Manufacturer's serial number, model number, Federal stock number, national stock number, or other identification number.

(iii) Source of the equipment, including the award number.

(iv) Whether title vests in the recipient or the Federal Government.

(v) Acquisition date (or date received, if the equipment was furnished by the Federal Government) and cost.

(vi) Information from which one can calculate the percentage of Federal participation in the cost of the equipment (not applicable to equipment furnished by the Federal Government).

(vii) Location and condition of the equipment and the date the information was reported.

(viii) Unit acquisition cost.

(ix) Ultimate disposition data, including date of disposal and sales price or the method used to determine current fair market value where a recipient compensates the Federal awarding agency for its share.

(2) Equipment owned by the Federal Government shall be identified to indicate Federal ownership.

(3) A physical inventory of equipment shall be taken and the results reconciled with the equipment records at least once every two years. Any differences between quantities determined by the physical inspection and those shown in the accounting records shall be investigated to determine the causes of the difference. The recipient shall, in connection with the inventory, verify the existence, current utilization, and continued need for the equipment.

(4) A control system shall be in effect to insure adequate safeguards to prevent loss, damage, or theft of the equipment. Any loss, damage, or theft of equipment shall be investigated and fully documented; if the equipment was owned by the Federal Government, the recipient shall promptly notify the Federal awarding agency.

(5) Adequate maintenance procedures shall be implemented to keep the equipment in good condition.

(6) Where the recipient is authorized or required to sell the equipment, proper sales procedures shall be established which provide for competition to the extent practicable and result in the highest possible return.

(g) When the recipient no longer needs the equipment, the equipment may be used for other activities in accordance with the following standards. For equipment with a current per unit fair market value of $5,000 or more, the recipient may retain the equipment for other uses provided that compensation is made to the original Federal awarding agency or its successor. The amount of compensation shall be computed by applying the percentage of Federal participation in the cost of the original project or program to the current fair market value of the equipment. If the recipient has no need for the equipment, the recipient shall request disposition instructions from the Federal awarding agency. The Federal awarding agency shall determine whether the equipment can be used to meet the agency's requirements. If no requirement exists within that agency, the availability of the equipment shall be reported to the General Services Administration by the Federal awarding agency to determine whether a requirement for the equipment exists in other Federal agencies. The Federal awarding agency shall issue instructions to the recipient no later than 120 calendar days after the recipient's request and the following procedures shall govern.

(1) If so instructed or if disposition instructions are not issued within 120 calendar days after the recipient's request, the recipient shall sell the equipment and reimburse the Federal awarding agency an amount computed by applying to the sales proceeds the percentage of Federal participation in the cost of the original project or program. However, the recipient shall be permitted to deduct and retain from the Federal share $500 or ten percent of the proceeds, whichever is less, for the recipient's selling and handling expenses.

(2) If the recipient is instructed to ship the equipment elsewhere, the recipient shall be reimbursed by the Federal Government by an amount which is computed by applying the percentage of the recipient's participation in the cost of the original project or program to the current fair market value of the equipment, plus any reasonable shipping or interim storage costs incurred.

(3) If the recipient is instructed to otherwise dispose of the equipment, the recipient shall be reimbursed by the Federal awarding agency for such costs incurred in its disposition.

(4) The Federal awarding agency may reserve the right to transfer the title to the Federal Government or to a third party named by the Federal Government when such third party is otherwise eligible under existing statutes. Such transfer shall be subject to the following standards.

(i) The equipment shall be appropriately identified in the award or otherwise made known to the recipient in writing.

(ii) The Federal awarding agency shall issue disposition instructions within 120 calendar days after receipt of a final inventory. The final inventory shall list all equipment acquired with grant funds and federally-owned equipment. If the Federal awarding agency fails to issue disposition instructions within the 120 calendar day period, the recipient shall apply the standards of this section, as appropriate.

(iii) When the Federal awarding agency exercises its right to take title, the equipment shall be subject to the provisions for federally-owned equipment.

§ 19.35 Supplies and other expendable property.

(a) Title to supplies and other expendable property shall vest in the recipient upon acquisition. If there is a residual inventory of unused supplies exceeding $5000 in total aggregate value upon termination or completion of the project or program and the supplies are not needed for any other federally-sponsored project or program, the recipient shall retain the supplies for use on non-Federal sponsored activities or sell them, but shall, in either case, compensate the Federal Government for its share. The amount of compensation shall be computed in the same manner as for equipment.

(b) The recipient shall not use supplies acquired with Federal funds to provide services to non-Federal outside organizations for a fee that is less than private companies charge for equivalent services, unless specifically authorized by Federal statute as long as the Federal Government retains an interest in the supplies.

§ 19.36 Intangible property.

(a) The recipient may copyright any work that is subject to copyright and was developed, or for which ownership was purchased, under an award. The Federal awarding agency(ies) reserve a royalty-free, nonexclusive and irrevocable right to reproduce, publish, or otherwise use the work for Federal purposes, and to authorize others to do so.

(b) Recipients are subject to applicable regulations governing patents and inventions, including government-wide regulations issued by the Department of Commerce at 37 CFR part 401, ''Rights to Inventions Made by Nonprofit Organizations and Small Business Firms Under Government Grants, Contracts and Cooperative Agreements.''

(c) The Federal Government has the right to:

(1) Obtain, reproduce, publish or otherwise use the data first produced under an award; and

(2) Authorize others to receive, reproduce, publish, or otherwise use such data for Federal purposes.

(d)(1) In addition, in response to a Freedom of Information Act (FOIA) request for research data relating to published research findings produced under an award that were used by the Federal Government in developing an agency action that has the force and effect of law, the Federal awarding agency shall request, and the recipient shall provide, within a reasonable time, the research data so that they can be made available to the public through the procedures established under the FOIA. If the Federal awarding agency obtains the research data solely in response to a FOIA request, the agency may charge

the requester a reasonable fee equaling the full incremental cost of obtaining the research data. This fee should reflect costs incurred by the agency, the recipient, and applicable subrecipients. This fee is in addition to any fees the agency may assess under the FOIA (5 U.S.C. 552(a)(4)(A)).

(2) The following definitions apply for purposes of this paragraph (d):

(i) *Research data* is defined as the recorded factual material commonly accepted in the scientific community as necessary to validate research findings, but not any of the following: preliminary analyses, drafts of scientific papers, plans for future research, peer reviews, or communications with colleagues. This ''recorded'' material excludes physical objects (e.g., laboratory samples). *Research data* also do not include:

(A) Trade secrets, commercial information, materials necessary to be held confidential by a researcher until they are published, or similar information which is protected under law; and

(B) Personnel and medical information and similar information the disclosure of which would constitute a clearly unwarranted invasion of personal privacy, such as information that could be used to identify a particular person in a research study.

(ii) *Published* is defined as either when:

(A) Research findings are published in a peer-reviewed scientific or technical journal; or

(B) A Federal agency publicly and officially cites the research findings in support of an agency action that has the force and effect of law.

(iii) *Used by the Federal Government in developing an agency action that has the force and effect of law* is defined as when an agency publicly and officially cites the research findings in support of an agency action that has the force and effect of law.

(e) Title to intangible property and debt instruments acquired under an award or subaward vests upon acquisition in the recipient. The recipient shall use that property for the originally-authorized purpose, and the recipient shall not encumber the property without approval of the Federal awarding agency. When no longer needed for the originally authorized purpose, disposition of the intangible property shall occur in accordance with the provisions of paragraph § 19.34(g).

[59 FR 15639, Apr. 4, 1994, as amended at 65 FR 14407, 14419, Mar. 16, 2000]

§ 19.37 Property trust relationship.

Real property, equipment, intangible property and debt instruments that are acquired or improved with Federal funds shall be held in trust by the recipient as trustee for the beneficiaries of the project or program under which the property was acquired or improved. Agencies may require recipients to record liens or other appropriate notices of record to indicate that personal or real property has been acquired or improved with Federal funds and that use and disposition conditions apply to the property.

PROCUREMENT STANDARDS

§ 19.40 Purpose of procurement standards.

Sections 19.41 through 19.48 set forth standards for use by recipients in establishing procedures for the procurement of supplies and other expendable property, equipment, real property and other services with Federal funds. These standards are furnished to ensure that such materials and services are obtained in an effective manner and in compliance with the provisions of applicable Federal statutes and executive orders. No additional procurement standards or requirements shall be imposed by the Federal awarding agencies upon recipients, unless specifically required by Federal statute or executive order or approved by OMB.

§ 19.41 Recipient responsibilities.

The standards contained in this section do not relieve the recipient of the contractual responsibilities arising under its contract(s). The recipient is the responsible authority, without recourse to the Federal awarding agency, regarding the settlement and satisfaction of all contractual and administrative issues arising out of procurements entered into in support of an award or other agreement. This includes disputes, claims, protests of award, source

evaluation or other matters of a contractual nature. Matters concerning violation of statute are to be referred to such Federal, State or local authority as may have proper jurisdiction.

§ 19.42 Codes of conduct.

The recipient shall maintain written standards of conduct governing the performance of its employees engaged in the award and administration of contracts. No employee, officer, or agent shall participate in the selection, award, or administration of a contract supported by Federal funds if a real or apparent conflict of interest would be involved. Such a conflict would arise when the employee, officer, or agent, any member of his or her immediate family, his or her partner, or an organization which employs or is about to employ any of the parties indicated herein, has a financial or other interest in the firm selected for an award. The officers, employees, and agents of the recipient shall neither solicit nor accept gratuities, favors, or anything of monetary value from contractors, or parties to subagreements. However, recipients may set standards for situations in which the financial interest is not substantial or the gift is an unsolicited item of nominal value. The standards of conduct shall provide for disciplinary actions to be applied for violations of such standards by officers, employees, or agents of the recipient.

§ 19.43 Competition.

All procurement transactions shall be conducted in a manner to provide, to the maximum extent practical, open and free competition. The recipient shall be alert to organizational conflicts of interest as well as noncompetitive practices among contractors that may restrict or eliminate competition or otherwise restrain trade. In order to ensure objective contractor performance and eliminate unfair competitive advantage, contractors that develop or draft specifications, requirements, statements of work, invitations for bids and/or requests for proposals shall be excluded from competing for such procurements. Awards shall be made to the bidder or offeror whose bid or offer is responsive to the solicitation and is most advantageous to the recipient, price, quality and other factors considered. Solicitations shall clearly set forth all requirements that the bidder or offeror shall fulfill in order for the bid or offer to be evaluated by the recipient. Any and all bids or offers may be rejected when it is in the recipient's interest to do so.

§ 19.44 Procurement procedures.

(a) All recipients shall establish written procurement procedures. These procedures shall provide for, at a minimum, that the conditions in paragraphs (a)(1), (2) and (3) of this section apply.

(1) Recipients avoid purchasing unnecessary items.

(2) Where appropriate, an analysis is made of lease and purchase alternatives to determine which would be the most economical and practical procurement for the Federal Government.

(3) Solicitations for goods and services provide for all of the following:

(i) A clear and accurate description of the technical requirements for the material, product or service to be procured. In competitive procurements, such a description shall not contain features which unduly restrict competition.

(ii) Requirements which the bidder/offeror must fulfill and all other factors to be used in evaluating bids or proposals.

(iii) A description, whenever practicable, of technical requirements in terms of functions to be performed or performance required, including the range of acceptable characteristics or minimum acceptable standards.

(iv) The specific features of ''brand name or equal'' descriptions that bidders are required to meet when such items are included in the solicitation.

(v) The acceptance, to the extent practicable and economically feasible, of products and services dimensioned in the metric system of measurement.

(vi) Preference, to the extent practicable and economically feasible, for products and services that conserve natural resources and protect the environment and are energy efficient.

(b) Positive efforts shall be made by recipients to utilize small businesses, minority-owned firms, and women's

business enterprises, whenever possible. Recipients of Federal awards shall take all of the following steps to further this goal.

(1) Ensure that small businesses, minority-owned firms, and women's business enterprises are used to the fullest extent practicable.

(2) Make information on forthcoming opportunities available and arrange timeframes for purchases and contracts to encourage and facilitate participation by small businesses, minority-owned firms, and women's business enterprises.

(3) Consider in the contract process whether firms competing for larger contracts intend to subcontract with small businesses, minority-owned firms, and women's business enterprises.

(4) Encourage contracting with consortiums of small businesses, minority-owned firms and women's business enterprises when a contract is too large for one of these firms to handle individually.

(5) Use the services and assistance, as appropriate, of such organizations as the Small Business Administration and the Department of Commerce's Minority Business Development Agency in the solicitation and utilization of small businesses, minority-owned firms, and women's business enterprises.

(c) The type of procuring instruments used (e.g., fixed price contracts, cost reimbursable contracts, purchase orders, and incentive contracts) shall be determined by the recipient but shall be appropriate for the particular procurement and for promoting the best interest of the program or project involved. The ''cost-plus-a-percentage-of-cost'' or ''percentage of construction cost'' methods of contracting shall not be used.

(d) Contracts shall be made only with responsible contractors who possess the potential ability to perform successfully under the terms and conditions of the proposed procurement. Consideration shall be given to such matters as contractor integrity, record of past performance, financial and technical resources or accessibility to other necessary resources. In certain circumstances, contracts with certain parties are restricted by 49 CFR part 29, the implementation of E.O.'s 12549 and 12689, ''Debarment and Suspension.''

(e) Recipients shall, on request, make available for the Federal awarding agency, pre-award review and procurement documents, such as request for proposals or invitations for bids, independent cost estimates, etc., when any of the following conditions apply.

(1) A recipient's procurement procedures or operation fails to comply with the procurement standards in this part.

(2) The procurement is expected to exceed the small purchase threshold fixed at 41 U.S.C. 403 (11) (currently $25,000) and is to be awarded without competition or only one bid or offer is received in response to a solicitation.

(3) The procurement, which is expected to exceed the small purchase threshold, specifies a ''brand name'' product.

(4) The proposed award over the small purchase threshold is to be awarded to other than the apparent low bidder under a sealed bid procurement.

(5) A proposed contract modification changes the scope of a contract or increases the contract amount by more than the amount of the small purchase threshold.

(f) Additional procurement procedures.

(1) Section 165 of the STAA of 1982, as amended; section 337 of the Surface Transportation and Uniform Relocation Assistance Act (STURAA) of 1987, 49 U.S.C. 1601, section 1048 of the Intermodal Surface Transportation Efficiency Act of 1991, and section 9129 of the Aviation Safety and Capacity Expansion Act of 1990, 49 U.S.C. app. 2226, impose Buy America requirements on the procurement of foreign products and materials by all recipients of FHWA, FTA, and Federal Aviation Administration (FAA) funds. Procedures are contained in 49 CFR part 660, Buy America Requirements and part 661, Buy America Requirements—STAA of 1982. In addition, for FTA recipients, nonregulatory guidance is contained in FTA Circular 4220.1B, Third Party Contracting Guidelines, Chapter I, section 11. Non-regulatory guidance for FAA programs is contained in FAA Order

5100.38A and special conditions in grant awards.

(2) Section 511(a)(16) of the Airport and Airway Improvement Act of 1982, 49 U.S.C. app. 2210, requires FAA recipients and subrecipients to extend the use of qualifications-based (e.g., architectural and engineering services) contract selection procedures to certain other related areas and to award such contracts in the same manner as Federal contracts for architectural and engineering services are negotiated under Title IX of the 1949 Federal Property and Administrative Services Act, or equivalent airport sponsor qualifications based requirements. Non-regulatory guidance for FAA programs is contained in FAA Order 5100.38A and special conditions in grant awards.

(3) Section 3(a)(2)(C) of the Federal Transit Act, as amended, (49 U.S.C. app. 1602(a)(2)(C)) prohibits the use of grant or loan funds to support procurements utilizing exclusionary or discriminatory specifications. Nonregulatory guidance is contained in FTA Circular 4220.1B, Third Party Contracting Guidelines, Chapter I, section 15 and Attachment A.

(4) Section 1241(b)(1) of 46 U.S.C. and 46 CFR part 381, Cargo Preference—U.S. Flag Vessels impose cargo preference requirements on the shipment of foreign made goods for FTA recipients. Nonregulatory guidance is contained in FTA Circular 4220.1B, Third Party Contracting Guidelines, Chapter I, section 10.

§ 19.45 Cost and price analysis.

Some form of cost or price analysis shall be made and documented in the procurement files in connection with every procurement action. Price analysis may be accomplished in various ways, including the comparison of price quotations submitted, market prices and similar indicia, together with discounts. Cost analysis is the review and evaluation of each element of cost to determine reasonableness, allocability and allowability.

§ 19.46 Procurement records.

Procurement records and files for purchases in excess of the small purchase threshold shall include the following at a minimum:

(a) Basis for contractor selection,

(b) Justification for lack of competition when competitive bids or offers are not obtained, and

(c) Basis for award cost or price.

§ 19.47 Contract administration.

A system for contract administration shall be maintained to ensure contractor conformance with the terms, conditions and specifications of the contract and to ensure adequate and timely follow up of all purchases. Recipients shall evaluate contractor performance and document, as appropriate, whether contractors have met the terms, conditions, and specifications of the contract.

§ 19.48 Contract provisions.

The recipient shall include, in addition to provisions to define a sound and complete agreement, the following provisions in all contracts. The following provisions shall also be applied to subcontracts.

(a) Contracts in excess of the small purchase threshold shall contain contractual provisions or conditions that allow for administrative, contractual, or legal remedies in instances in which a contractor violates or breaches the contract terms, and provide for such remedial actions as may be appropriate.

(b) All contracts in excess of the small purchase threshold shall contain suitable provisions for termination by the recipient, including the manner by which termination shall be effected and the basis for settlement. In addition, such contracts shall describe conditions under which the contract may be terminated for default as well as conditions where the contract may be terminated because of circumstances beyond the control of the contractor.

(c) Except as otherwise required by statute, an award that requires the contracting (or subcontracting) for construction or facility improvements shall provide for the recipient to follow its own requirements relating to bid guarantees, performance bonds, and payment bonds unless the construction contract or subcontract exceeds $100,000. For those contracts or subcontracts exceeding $100,000, the Federal awarding agency may accept the

bonding policy and requirements of the recipient, provided the Federal awarding agency has made a determination that the Federal Government's interest is adequately protected. If such a determination has not been made, the minimum requirements shall be as follows:

(1) A bid guarantee from each bidder equivalent to five percent of the bid price. The ''bid guarantee'' shall consist of a firm commitment such as a bid bond, certified check, or other negotiable instrument accompanying a bid as assurance that the bidder shall, upon acceptance of his bid, execute such contractual documents as may be required within the time specified.

(2) A performance bond on the part of the contractor for 100 percent of the contract price. A ''performance bond'' is one executed in connection with a contract to secure fulfillment of all the contractor's obligations under such contract.

(3) A payment bond on the part of the contractor for 100 percent of the contract price. A ''payment bond'' is one executed in connection with a contract to assure payment as required by statute of all persons supplying labor and material in the execution of the work provided for in the contract.

(4) Where bonds are required in the situations described herein, the bonds shall be obtained from companies holding certificates of authority as acceptable sureties pursuant to 31 CFR part 223, ''Surety Companies Doing Business with the United States.''

(d) All negotiated contracts (except those for less than the small purchase threshold) awarded by recipients shall include a provision to the effect that the recipient, the Federal awarding agency, the Comptroller General of the United States, or any of their duly authorized representatives, shall have access to any books, documents, papers and records of the contractor which are directly pertinent to a specific program for the purpose of making audits, examinations, excerpts and transcriptions.

(e) All contracts, including small purchases, awarded by recipients and their contractors shall contain the procurement provisions of appendix A to this part, as applicable.

REPORTS AND RECORDS

§ 19.50 Purpose of reports and records.

Sections 19.51 through 19.53 set forth the procedures for monitoring and reporting on the recipient's financial and program performance and the necessary standard reporting forms. They also set forth record retention requirements.

§ 19.51 Monitoring and reporting program performance.

(a) Recipients are responsible for managing and monitoring each project, program, subaward, function or activity supported by the award. Recipients shall monitor subawards to ensure subrecipients have met the audit requirements as delineated in § 19.26.

(b) The Federal awarding agency shall prescribe the frequency with which the performance reports shall be submitted. Except as provided in § 19.51(f), performance reports shall not be required more frequently than quarterly or, less frequently than annually. Annual reports shall be due 90 calendar days after the grant year; quarterly or semi-annual reports shall be due 30 days after the reporting period. The Federal awarding agency may require annual reports before the anniversary dates of multiple year awards in lieu of these requirements. The final performance reports are due 90 calendar days after the expiration or termination of the award.

(c) If inappropriate, a final technical or performance report shall not be required after completion of the project.

(d) When required, performance reports shall generally contain, for each award, brief information on each of the following:

(1) A comparison of actual accomplishments with the goals and objectives established for the period, the findings of the investigator, or both. Whenever appropriate and the output of programs or projects can be readily quantified, such quantitative data should be related to cost data for computation of unit costs.

(2) Reasons why established goals were not met, if appropriate.

(3) Other pertinent information including, when appropriate, analysis

and explanation of cost overruns or high unit costs.

(e) Recipients shall not be required to submit more than the original and two copies of performance reports.

(f) Recipients shall immediately notify the Federal awarding agency of developments that have a significant impact on the award-supported activities. Also, notification shall be given in the case of problems, delays, or adverse conditions which materially impair the ability to meet the objectives of the award. This notification shall include a statement of the action taken or contemplated, and any assistance needed to resolve the situation.

(g) Federal awarding agencies may make site visits, as needed.

(h) Federal awarding agencies shall comply with clearance requirements of 5 CFR part 1320 when requesting performance data from recipients.

§ 19.52 Financial reporting.

(a) The following forms or such other forms as may be approved by OMB are authorized for obtaining financial information from recipients.

(1) SF–269 or SF–269A, Financial Status Report.

(i) Each Federal awarding agency shall require recipients to use the SF–269 or SF–269A to report the status of funds for all nonconstruction projects or programs. A Federal awarding agency may, however, have the option of not requiring the SF–269 or SF–269A when the SF–270, Request for Advance or Reimbursement, or SF–272, Report of Federal Cash Transactions, is determined to provide adequate information to meet its needs, except that a final SF–269 or SF–269A shall be required at the completion of the project when the SF–270 is used only for advances.

(ii) The Federal awarding agency shall prescribe whether the report shall be on a cash or accrual basis. If the Federal awarding agency requires accrual information and the recipient's accounting records are not normally kept on the accrual basis, the recipient shall not be required to convert its accounting system, but shall develop such accrual information through best estimates based on an analysis of the documentation on hand.

(iii) The Federal awarding agency shall determine the frequency of the Financial Status Report for each project or program, considering the size and complexity of the particular project or program. However, the report shall not be required more frequently than quarterly or less frequently than annually. A final report shall be required at the completion of the agreement.

(iv) The Federal awarding agency shall require recipients to submit the SF–269 or SF–269A (an original and no more than two copies) no later than 30 days after the end of each specified reporting period for quarterly and semi-annual reports, and 90 calendar days for annual and final reports. Extensions of reporting due dates may be approved by the Federal awarding agency upon request of the recipient.

(2) SF–272, Report of Federal Cash Transactions.

(i) When funds are advanced to recipients the Federal awarding agency shall require each recipient to submit the SF–272 and, when necessary, its continuation sheet, SF–272a. The Federal awarding agency shall use this report to monitor cash advanced to recipients and to obtain disbursement information for each agreement with the recipients.

(ii) Federal awarding agencies may require forecasts of Federal cash requirements in the ''Remarks'' section of the report.

(iii) When practical and deemed necessary, Federal awarding agencies may require recipients to report in the ''Remarks'' section the amount of cash advances received in excess of three days. Recipients shall provide short narrative explanations of actions taken to reduce the excess balances.

(iv) Recipients shall be required to submit not more than the original and two copies of the SF–272 15 calendar days following the end of each quarter. The Federal awarding agencies may require a monthly report from those recipients receiving advances totaling $1 million or more per year.

(v) Federal awarding agencies may waive the requirement for submission of the SF–272 for any one of the following reasons:

(A) When monthly advances do not exceed $25,000 per recipient, provided that such advances are monitored through other forms contained in this section;

(B) If, in the Federal awarding agency's opinion, the recipient's accounting controls are adequate to minimize excessive Federal advances; or,

(C) When the electronic payment mechanisms provide adequate data.

(b) When the Federal awarding agency needs additional information or more frequent reports, the following shall be observed.

(1) When additional information is needed to comply with legislative requirements, Federal awarding agencies shall issue instructions to require recipients to submit such information under the ''Remarks'' section of the reports.

(2) When a Federal awarding agency determines that a recipient's accounting system does not meet the standards in §19.21, additional pertinent information to further monitor awards may be obtained upon written notice to the recipient until such time as the system is brought up to standard. The Federal awarding agency, in obtaining this information, shall comply with report clearance requirements of 5 CFR part 1320.

(3) Federal awarding agencies are encouraged to shade out any line item on any report if not necessary.

(4) Federal awarding agencies may accept the identical information from the recipients in machine readable format or computer printouts or electronic outputs in lieu of prescribed formats.

(5) Federal awarding agencies may provide computer or electronic outputs to recipients when such expedites or contributes to the accuracy of reporting.

§ 19.53 Retention and access requirements for records.

(a) This section sets forth requirements for record retention and access to records for awards to recipients. Federal awarding agencies shall not impose any other record retention or access requirements upon recipients.

(b) Financial records, supporting documents, statistical records, and all other records pertinent to an award shall be retained for a period of three years from the date of submission of the final expenditure report or, for awards that are renewed quarterly or annually, from the date of the submission of the quarterly or annual financial report, as authorized by the Federal awarding agency. The only exceptions are the following.

(1) If any litigation, claim, or audit is started before the expiration of the 3-year period, the records shall be retained until all litigation, claims or audit findings involving the records have been resolved and final action taken.

(2) Records for real property and equipment acquired with Federal funds shall be retained for 3 years after final disposition.

(3) When records are transferred to or maintained by the Federal awarding agency, the 3-year retention requirement is not applicable to the recipient.

(4) Indirect cost rate proposals, cost allocations plans, etc. as specified in paragraph §19.53(g).

(c) Copies of original records may be substituted for the original records if authorized by the Federal awarding agency.

(d) The Federal awarding agency shall request transfer of certain records to its custody from recipients when it determines that the records possess long term retention value. However, in order to avoid duplicate recordkeeping, a Federal awarding agency may make arrangements for recipients to retain any records that are continuously needed for joint use.

(e) The Federal awarding agency, the Inspector General, Comptroller General of the United States, or any of their duly authorized representatives, have the right of timely and unrestricted access to any books, documents, papers, or other records of recipients that are pertinent to the awards, in order to make audits, examinations, excerpts, transcripts and copies of such documents. This right also includes timely and reasonable access to a recipient's personnel for the purpose of interview and discussion related to such documents. The rights of access in this paragraph are not limited to the required retention period,

but shall last as long as records are retained.

(f) Unless required by statute, no Federal awarding agency shall place restrictions on recipients that limit public access to the records of recipients that are pertinent to an award, except when the Federal awarding agency can demonstrate that such records shall be kept confidential and would have been exempted from disclosure pursuant to the Freedom of Information Act (5 U.S.C. 552) if the records had belonged to the Federal awarding agency.

(g) Indirect cost rate proposals, cost allocations plans, etc. Paragraphs (g)(1) and (g)(2) of this section apply to the following types of documents, and their supporting records: Indirect cost rate computations or proposals, cost allocation plans, and any similar accounting computations of the rate at which a particular group of costs is chargeable (such as computer usage chargeback rates or composite fringe benefit rates).

(1) *If submitted for negotiation.* If the recipient submits to the Federal awarding agency or the subrecipient submits to the recipient the proposal, plan, or other computation to form the basis for negotiation of the rate, then the 3-year retention period for its supporting records starts on the date of such submission.

(2) *If not submitted for negotiation.* If the recipient is not required to submit to the Federal awarding agency or the subrecipient is not required to submit to the recipient the proposal, plan, or other computation for negotiation purposes, then the 3-year retention period for the proposal, plan, or other computation and its supporting records starts at the end of the fiscal year (or other accounting period) covered by the proposal, plan, or other computation.

TERMINATION AND ENFORCEMENT

§ 19.60 Purpose of termination and enforcement.

Sections 19.61 and 19.62 set forth uniform suspension, termination and enforcement procedures.

§ 19.61 Termination.

(a) Awards may be terminated in whole or in part only if the conditions in paragraph (a) (1), (2) or (3) of this section apply.

(1) By the Federal awarding agency, if a recipient materially fails to comply with the terms and conditions of an award.

(2) By the Federal awarding agency with the consent of the recipient, in which case the two parties shall agree upon the termination conditions, including the effective date and, in the case of partial termination, the portion to be terminated.

(3) By the recipient upon sending to the Federal awarding agency written notification setting forth the reasons for such termination, the effective date, and, in the case of partial termination, the portion to be terminated. However, if the Federal awarding agency determines in the case of partial termination that the reduced or modified portion of the grant will not accomplish the purposes for which the grant was made, it may terminate the grant in its entirety under either paragraph (a) (1) or (2) of this section.

(b) If costs are allowed under an award, the responsibilities of the recipient referred to in §19.71(a), including those for property management as applicable, shall be considered in the termination of the award, and provision shall be made for continuing responsibilities of the recipient after termination, as appropriate.

§ 19.62 Enforcement.

(a) Remedies for noncompliance. If a recipient materially fails to comply with the terms and conditions of an award, whether stated in a Federal statute, regulation, assurance, application, or notice of award, the Federal awarding agency may, in addition to imposing any of the special conditions outlined in §19.14, take one or more of the following actions, as appropriate in the circumstances.

(1) Temporarily withhold cash payments pending correction of the deficiency by the recipient or more severe enforcement action by the Federal awarding agency.

(2) Disallow (that is, deny both use of funds and any applicable matching

credit for) all or part of the cost of the activity or action not in compliance.

(3) Wholly or partly suspend or terminate the current award.

(4) Withhold further awards for the project or program.

(5) Take other remedies that may be legally available.

(b) Hearings and appeals. In taking an enforcement action, the awarding agency shall provide the recipient an opportunity for hearing, appeal, or other administrative proceeding to which the recipient is entitled under any statute or regulation applicable to the action involved.

(c) Effects of suspension and termination. Costs of a recipient resulting from obligations incurred by the recipient during a suspension or after termination of an award are not allowable unless the awarding agency expressly authorizes them in the notice of suspension or termination or subsequently. Other recipient costs during suspension or after termination which are necessary and not reasonably avoidable are allowable if the conditions in paragraph (c) (1) or (2) of this section apply.

(1) The costs result from obligations which were properly incurred by the recipient before the effective date of suspension or termination, are not in anticipation of it, and in the case of a termination, are noncancellable.

(2) The costs would be allowable if the award were not suspended or expired normally at the end of the funding period in which the termination takes effect.

(d) Relationship to debarment and suspension. The enforcement remedies identified in this section, including suspension and termination, do not preclude a recipient from being subject to debarment and suspension under E.O.s 12549 and 12689 and 49 CFR part 29 (see §19.13).

Subpart D—After-the-Award Requirements

§ 19.70 Purpose.

Sections 19.71 through 19.73 contain closeout procedures and other procedures for subsequent disallowances and adjustments.

§ 19.71 Closeout procedures.

(a) Recipients shall submit, within 90 calendar days after the date of completion of the award, all financial, performance, and other reports as required by the terms and conditions of the award. The Federal awarding agency may approve extensions when requested by the recipient.

(b) Unless the Federal awarding agency authorizes an extension, a recipient shall liquidate all obligations incurred under the award not later than 90 calendar days after the funding period or the date of completion as specified in the terms and conditions of the award or in agency implementing instructions.

(c) The Federal awarding agency shall make prompt payments to a recipient for allowable reimbursable costs under the award being closed out.

(d) The recipient shall promptly refund any balances of unobligated cash that the Federal awarding agency has advanced or paid and that is not authorized to be retained by the recipient for use in other projects. OMB Circular A–129 governs unreturned amounts that become delinquent debts.

(e) When authorized by the terms and conditions of the award, the Federal awarding agency shall make a settlement for any upward or downward adjustments to the Federal share of costs after closeout reports are received.

(f) The recipient shall account for any real and personal property acquired with Federal funds or received from the Federal Government in accordance with §§19.31 through 19.37.

(g) In the event a final audit has not been performed prior to the closeout of an award, the Federal awarding agency shall retain the right to recover an appropriate amount after fully considering the recommendations on disallowed costs resulting from the final audit.

§ 19.72 Subsequent adjustments and continuing responsibilities.

(a) The closeout of an award does not affect any of the following.

(1) The right of the Federal awarding agency to disallow costs and recover funds on the basis of a later audit or other review.

(2) The obligation of the recipient to return any funds due as a result of later refunds, corrections, or other transactions.

(3) Audit requirements in §19.26.

(4) Property management requirements in §§19.31 through 19.37.

(5) Records retention as required in §19.53.

(b) After closeout of an award, a relationship created under an award may be modified or ended in whole or in part with the consent of the Federal awarding agency and the recipient, provided the responsibilities of the recipient referred to in §19.73(a), including those for property management as applicable, are considered and provisions made for continuing responsibilities of the recipient, as appropriate.

§ 19.73 Collection of amounts due.

(a) Any funds paid to a recipient in excess of the amount to which the recipient is finally determined to be entitled under the terms and conditions of the award constitute a debt to the Federal Government. If not paid within a reasonable period after the demand for payment, the Federal awarding agency may reduce the debt by the provisions of paragraph (a) (1), (2) or (3) of this section.

(1) Making an administrative offset against other requests for reimbursements.

(2) Withholding advance payments otherwise due to the recipient.

(3) Taking other action permitted by statute.

(b) Except as otherwise provided by law, the Federal awarding agency shall charge interest on an overdue debt in accordance with 4 CFR chapter II, ''Federal Claims Collection Standards.''

APPENDIX A TO PART 19—CONTRACT PROVISIONS

All contracts, awarded by a recipient including small purchases, shall contain the following provisions as applicable:

1. *Equal Employment Opportunity*—All contracts shall contain a provision requiring compliance with E.O. 11246, ''Equal Employment Opportunity,'' as amended by E.O. 11375, ''Amending Executive Order 11246 Relating to Equal Employment Opportunity,'' and as supplemented by regulations at 41 CFR part 60, ''Office of Federal Contract Compliance Programs, Equal Employment Opportunity, Department of Labor.''

2. *Copeland ''Anti-Kickback'' Act (18 U.S.C. 874 and 40 U.S.C. 276c)*—All contracts and subgrants in excess of $2,000 for construction or repair awarded by recipients and subrecipients shall include a provision for compliance with the Copeland ''Anti-Kickback'' Act (18 U.S.C. 874), as supplemented by Department of Labor regulations (29 CFR part 3, ''Contractors and Subcontractors on Public Building or Public Work Financed in Whole or in part by Loans or Grants from the United States''). The Act provides that each contractor or subrecipient shall be prohibited from inducing, by any means, any person employed in the construction, completion, or repair of public work, to give up any part of the compensation to which he is otherwise entitled. The recipient shall report all suspected or reported violations to the Federal awarding agency.

3. *Davis-Bacon Act, as amended (40 U.S.C. 276a to a–7)*—When required by Federal program legislation, all construction contracts awarded by the recipients and subrecipients of more than $2000 shall include a provision for compliance with the Davis-Bacon Act (40 U.S.C. 276a to a(7) and as supplemented by Department of Labor regulations (29 CFR part 5, ''Labor Standards Provisions Applicable to Contracts Governing Federally Financed and Assisted Construction''). Under this Act, contractors shall be required to pay wages to laborers and mechanics at a rate not less than the minimum wages specified in a wage determination made by the Secretary of Labor. In addition, contractors shall be required to pay wages not less than once a week. The recipient shall place a copy of the current prevailing wage determination issued by the Department of Labor in each solicitation and the award of a contract shall be conditioned upon the acceptance of the wage determination. The recipient shall report all suspected or reported violations to the Federal awarding agency.

4. *Contract Work Hours and Safety Standards Act (40 U.S.C. 327–333)*—Where applicable, all contracts awarded by recipients in excess of $2,000 for construction contracts and in excess of $2,500 for other contracts that involve the employment of mechanics or laborers shall include a provision for compliance with sections 102 and 107 of the Contract Work Hours and Safety Standards Act (40 U.S.C. 327–333), as supplemented by Department of Labor regulations (29 CFR part 5). Under section 102 of the Act, each contractor shall be required to compute the wages of every mechanic and laborer on the basis of a standard work week of 40 hours. Work in excess of the standard work week is permissible provided that the worker is compensated at a rate of not less than 1½ times the basic rate of pay for all hours worked in excess of 40 hours in

the work week. Section 107 of the Act is applicable to construction work and provides that no laborer or mechanic shall be required to work in surroundings or under working conditions which are unsanitary, hazardous or dangerous. These requirements do not apply to the purchases of supplies or materials or articles ordinarily available on the open market, or contracts for transportation or transmission of intelligence.

5. *Rights to Inventions Made Under a Contract or Agreement*—Contracts or agreements for the performance of experimental, developmental, or research work shall provide for the rights of the Federal Government and the recipient in any resulting invention in accordance with 37 CFR part 401, ''Rights to Inventions Made by Nonprofit Organizations and Small Business Firms Under Government Grants, Contracts and Cooperative Agreements,'' and any implementing regulations issued by the awarding agency.

6. *Clean Air Act (42 U.S.C. 7401 et seq.) and the Federal Water Pollution Control Act (33 U.S.C. 1251 et seq.), as amended*—Contracts and subgrants of amounts in excess of $100,000 shall contain a provision that requires the recipient to agree to comply with all applicable standards, orders or regulations issued pursuant to the Clean Air Act (42 U.S.C. 7401 et seq.) and the Federal Water Pollution Control Act as amended (33 U.S.C. 1251 et seq.). Violations shall be reported to the Federal awarding agency and the Regional Office of the Environmental Protection Agency (EPA).

7. *Byrd Anti-Lobbying Amendment (31 U.S.C. 1352)*—Contractors who apply or bid for an award of $100,000 or more shall file the certification required by 49 CFR part 20, ''New Restrictions on Lobbying.'' Each tier certifies to the tier above that it will not and has not used Federal appropriated funds to pay any person or organization for influencing or attempting to influence an officer or employee of any agency, a member of Congress, officer or employee of Congress, or an employee of a member of Congress in connection with obtaining any Federal contract, grant or any other award covered by 31 U.S.C. 1352. Each tier shall also disclose any lobbying with non-Federal funds that takes place in connection with obtaining any Federal award. Such disclosures are forwarded from tier to tier up to the recipient.

8. *Debarment and Suspension (E.O.s 12549 and 12689)*—No contract shall be made to parties listed on the General Services Administration's List of Parties Excluded from Federal Procurement or Nonprocurement Programs in accordance with E.O.s 12549 and 12689, ''Debarment and Suspension'' and 49 CFR part 29. This list contains the names of parties debarred, suspended, or otherwise excluded by agencies, and contractors declared ineligible under statutory or regulatory authority other than E.O. 12549. Contractors with awards that exceed the small purchase threshold shall provide the required certification regarding its exclusion status and that of its principal employees.

PART 20—NEW RESTRICTIONS ON LOBBYING

Subpart A—General

Sec.
20.100 Conditions on use of funds.
20.105 Definitions.
20.110 Certification and disclosure.

Subpart B—Activities by Own Employees

20.200 Agency and legislative liaison.
20.205 Professional and technical services.
20.210 Reporting.

Subpart C—Activities by Other Than Own Employees

20.300 Professional and technical services.

Subpart D—Penalties and Enforcement

20.400 Penalties.
20.405 Penalty procedures.
20.410 Enforcement.

Subpart E—Exemptions

20.500 Secretary of Defense.

Subpart F—Agency Reports

20.600 Semi-annual compilation.
20.605 Inspector General report.
APPENDIX A TO PART 20—CERTIFICATION REGARDING LOBBYING
APPENDIX B TO PART 20—DISCLOSURE FORM TO REPORT LOBBYING

AUTHORITY: Sec. 319, Public Law 101–121 (31 U.S.C. 1352); 49 U.S.C. 322(a).

CROSS REFERENCE: See also Office of Management and Budget notice published at 54 FR 52306, December 20, 1989.

SOURCE: 55 FR 6737, 6756, Feb. 26, 1990, unless otherwise noted.

Subpart A—General

§ 20.100 Conditions on use of funds.

(a) No appropriated funds may be expended by the recipient of a Federal contract, grant, loan, or cooperative ageement to pay any person for influencing or attempting to influence an officer or employee of any agency, a Member of Congress, an officer or employee of Congress, or an employee of a

Member of Congress in connection with any of the following covered Federal actions: the awarding of any Federal contract, the making of any Federal grant, the making of any Federal loan, the entering into of any cooperative agreement, and the extension, continuation, renewal, amendment, or modification of any Federal contract, grant, loan, or cooperative agreement.

(b) Each person who requests or receives from an agency a Federal contract, grant, loan, or cooperative agreement shall file with that agency a certification, set forth in appendix A, that the person has not made, and will not make, any payment prohibited by paragraph (a) of this section.

(c) Each person who requests or receives from an agency a Federal contract, grant, loan, or a cooperative agreement shall file with that agency a disclosure form, set forth in appendix B, if such person has made or has agreed to make any payment using nonappropriated funds (to include profits from any covered Federal action), which would be prohibited under paragraph (a) of this section if paid for with appropriated funds.

(d) Each person who requests or receives from an agency a commitment providing for the United States to insure or guarantee a loan shall file with that agency a statement, set forth in appendix A, whether that person has made or has agreed to make any payment to influence or attempt to influence an officer or employee of any agency, a Member of Congress, an officer or employee of Congress, or an employee of a Member of Congress in connection with that loan insurance or guarantee.

(e) Each person who requests or receives from an agency a commitment providing for the United States to insure or guarantee a loan shall file with that agency a disclosure form, set forth in appendix B, if that person has made or has agreed to make any payment to influence or attempt to influence an officer or employee of any agency, a Member of Congress, an officer or employee of Congress, or an employee of a Member of Congress in connection with that loan insurance or guarantee.

§ 20.105 Definitions.

For purposes of this part:

(a) *Agency*, as defined in 5 U.S.C. 552(f), includes Federal executive departments and agencies as well as independent regulatory commissions and Government corporations, as defined in 31 U.S.C. 9101(1).

(b) *Covered Federal action* means any of the following Federal actions:

(1) The awarding of any Federal contract;

(2) The making of any Federal grant;

(3) The making of any Federal loan;

(4) The entering into of any cooperative agreement; and,

(5) The extension, continuation, renewal, amendment, or modification of any Federal contract, grant, loan, or cooperative agreement.

Covered Federal action does not include receiving from an agency a commitment providing for the United States to insure or guarantee a loan. Loan guarantees and loan insurance are addressed independently within this part.

(c) *Federal contract* means an acquisition contract awarded by an agency, including those subject to the Federal Acquisition Regulation (FAR), and any other acquisition contract for real or personal property or services not subject to the FAR.

(d) *Federal cooperative agreement* means a cooperative agreement entered into by an agency.

(e) *Federal grant* means an award of financial assistance in the form of money, or property in lieu of money, by the Federal Government or a direct appropriation made by law to any person. The term does not include technical assistance which provides services instead of money, or other assistance in the form of revenue sharing, loans, loan guarantees, loan insurance, interest subsidies, insurance, or direct United States cash assistance to an individual.

(f) *Federal loan* means a loan made by an agency. The term does not include loan guarantee or loan insurance.

(g) *Indian tribe* and *tribal organization* have the meaning provided in section 4 of the Indian Self-Determination and Education Assistance Act (25 U.S.C. 450B). Alaskan Natives are included

under the definitions of Indian tribes in that Act.

(h) *Influencing or attempting to influence* means making, with the intent to influence, any communication to or appearance before an officer or employee or any agency, a Member of Congress, an officer or employee of Congress, or an employee of a Member of Congress in connection with any covered Federal action.

(i) *Loan guarantee* and *loan insurance* means an agency's guarantee or insurance of a loan made by a person.

(j) *Local government* means a unit of government in a State and, if chartered, established, or otherwise recognized by a State for the performance of a governmental duty, including a local public authority, a special district, an intrastate district, a council of governments, a sponsor group representative organization, and any other instrumentality of a local government.

(k) *Officer or employee of an agency* includes the following individuals who are employed by an agency:

(1) An individual who is appointed to a position in the Government under title 5, U.S. Code, including a position under a temporary appointment;

(2) A member of the uniformed services as defined in section 101(3), title 37, U.S. Code;

(3) A special Government employee as defined in section 202, title 18, U.S. Code; and,

(4) An individual who is a member of a Federal advisory committee, as defined by the Federal Advisory Committee Act, title 5, U.S. Code appendix 2.

(l) *Person* means an individual, corporation, company, association, authority, firm, partnership, society, State, and local government, regardless of whether such entity is operated for profit or not for profit. This term excludes an Indian tribe, tribal organization, or any other Indian organization with respect to expenditures specifically permitted by other Federal law.

(m) *Reasonable compensation* means, with respect to a regularly employed officer or employee of any person, compensation that is consistent with the normal compensation for such officer or employee for work that is not furnished to, not funded by, or not furnished in cooperation with the Federal Government.

(n) *Reasonable payment* means, with respect to perfessional and other technical services, a payment in an amount that is consistent with the amount normally paid for such services in the private sector.

(o) *Recipient* includes all contractors, subcontractors at any tier, and subgrantees at any tier of the recipient of funds received in connection with a Federal contract, grant, loan, or cooperative agreement. The term excludes an Indian tribe, tribal organization, or any other Indian organization with respect to expenditures specifically permitted by other Federal law.

(p) *Regularly employed* means, with respect to an officer or employee of a person requesting or receiving a Federal contract, grant, loan, or cooperative agreement or a commitment providing for the United States to insure or guarantee a loan, an officer or employee who is employed by such person for at least 130 working days within one year immediately preceding the date of the submission that initiates agency consideration of such person for receipt of such contract, grant, loan, cooperative agreement, loan insurance commitment, or loan guarantee commitment. An officer or employee who is employed by such person for less than 130 working days within one year immediately preceding the date of the submission that initiates agency consideration of such person shall be considered to be regularly employed as soon as he or she is employed by such person for 130 working days.

(q) *State* means a State of the United States, the District of Columbia, the Commonwealth of Puerto Rico, a territory or possession of the United States, an agency or instrumentality of a State, and a multi-State, regional, or interstate entity having governmental duties and powers.

§ 20.110 Certification and disclosure.

(a) Each person shall file a certification, and a disclosure form, if required, with each submission that initiates agency consideration of such person for:

(1) Award of a Federal contract, grant, or cooperative agreement exceeding $100,000; or

(2) An award of a Federal loan or a commitment providing for the United States to insure or guarantee a loan exceeding $150,000.

(b) Each person shall file a certification, and a disclosure form, if required, upon receipt by such person of:

(1) A Federal contract, grant, or cooperative agreement exceeding $100,000; or

(2) A Federal loan or a commitment providing for the United States to insure or guarantee a loan exceeding $150,000,

Unless such person previously filed a certification, and a disclosure form, if required, under paragraph (a) of this section.

(c) Each person shall file a disclosure form at the end of each calendar quarter in which there occurs any event that requires disclosure or that materially affects the accuracy of the information contained in any disclosure form previously filed by such person under paragraphs (a) or (b) of this section. An event that materially affects the accuracy of the information reported includes:

(1) A cumulative increase of $25,000 or more in the amount paid or expected to be paid for influencing or attempting to influence a covered Federal action; or

(2) A change in the person(s) or individual(s) influencing or attempting to influence a covered Federal action; or,

(3) A change in the officer(s), employee(s), or Member(s) contacted to influence or attempt to influence a covered Federal action.

(d) Any person who requests or receives from a person referred to in paragraphs (a) or (b) of this section:

(1) A subcontract exceeding $100,000 at any tier under a Federal contract;

(2) A subgrant, contract, or subcontract exceeding $100,000 at any tier under a Federal grant;

(3) A contract or subcontract exceeding $100,000 at any tier under a Federal loan exceeding $150,000; or,

(4) A contract or subcontract exceeding $100,000 at any tier under a Federal cooperative agreement,

Shall file a certification, and a disclosure form, if required, to the next tier above.

(e) All disclosure forms, but not certifications, shall be forwarded from tier to tier until received by the person referred to in paragraphs (a) or (b) of this section. That person shall forward all disclosure forms to the agency.

(f) Any certification or disclosure form filed under paragraph (e) of this section shall be treated as a material representation of fact upon which all receiving tiers shall rely. All liability arising from an erroneous representation shall be borne solely by the tier filing that representation and shall not be shared by any tier to which the erroneous representation is forwarded. Submitting an erroneous certification or disclosure constitutes a failure to file the required certification or disclosure, respectively. If a person fails to file a required certification or disclosure, the United States may pursue all available remedies, including those authorized by section 1352, title 31, U.S. Code.

(g) For awards and commitments in process prior to December 23, 1989, but not made before that date, certifications shall be required at award or commitment, covering activities occurring between December 23, 1989, and the date of award or commitment. However, for awards and commitments in process prior to the December 23, 1989 effective date of these provisions, but not made before December 23, 1989, disclosure forms shall not be required at time of award or commitment but shall be filed within 30 days.

(h) No reporting is required for an activity paid for with appropriated funds if that activity is allowable under either subpart B or C.

Subpart B—Activities by Own Employees

§ 20.200 Agency and legislative liaison.

(a) The prohibition on the use of appropriated funds, in § 20.100 (a), does not apply in the case of a payment of reasonable compensation made to an officer or employee of a person requesting or receiving a Federal contract, grant, loan, or cooperative agreement

if the payment is for agency and legislative liaison activities not directly related to a covered Federal action.

(b) For purposes of paragraph (a) of this section, providing any information specifically requested by an agency or Congress is allowable at any time.

(c) For purposes of paragraph (a) of this section, the following agency and legislative liaison activities are allowable at any time only where they are not related to a specific solicitation for any covered Federal action:

(1) Discussing with an agency (including individual demonstrations) the qualities and characteristics of the person's products or services, conditions or terms of sale, and service capabilities; and,

(2) Technical discussions and other activities regarding the application or adaptation of the person's products or services for an agency's use.

(d) For purposes of paragraph (a) of this section, the following agencies and legislative liaison activities are allowable only where they are prior to formal solicitation of any covered Federal action:

(1) Providing any information not specifically requested but necessary for an agency to make an informed decision about initiation of a covered Federal action;

(2) Technical discussions regarding the preparation of an unsolicited proposal prior to its official submission; and,

(3) Capability presentations by persons seeking awards from an agency pursuant to the provisions of the Small Business Act, as amended by Public Law 95–507 and other subsequent amendments.

(e) Only those activities expressly authorized by this section are allowable under this section.

§ 20.205 Professional and technical services.

(a) The prohibition on the use of appropriated funds, in § 20.100 (a), does not apply in the case of a payment of reasonable compensation made to an officer or employee of a person requesting or receiving a Federal contract, grant, loan, or cooperative agreement or an extension, continuation, renewal, amendment, or modification of a Federal contract, grant, loan, or cooperative agreement if payment is for professional or technical services rendered directly in the preparation, submission, or negotiation of any bid, proposal, or application for that Federal contract, grant, loan, or cooperative agreement or for meeting requirements imposed by or pursuant to law as a condition for receiving that Federal contract, grant, loan, or cooperative agreement.

(b) For purposes of paragraph (a) of this section, ''professional and technical services'' shall be limited to advice and analysis directly applying any professional or technical discipline. For example, drafting of a legal document accompanying a bid or proposal by a lawyer is allowable. Similarly, technical advice provided by an engineer on the performance or operational capability of a piece of equipment rendered directly in the negotiation of a contract is allowable. However, communications with the intent to influence made by a professional (such as a licensed lawyer) or a technical person (such as a licensed accountant) are not allowable under this section unless they provide advice and analysis directly applying their professional or technical expertise and unless the advice or analysis is rendered directly and solely in the preparation, submission or negotiation of a covered Federal action. Thus, for example, communications with the intent to influence made by a lawyer that do not provide legal advice or analysis directly and solely related to the legal aspects of his or her client's proposal, but generally advocate one proposal over another are not allowable under this section because the lawyer is not providing professional legal services. Similarly, communications with the intent to influence made by an engineer providing an engineering analysis prior to the preparation or submission of a bid or proposal are not allowable under this section since the engineer is providing technical services but not directly in the preparation, submission or negotiation of a covered Federal action.

(c) Requirements imposed by or pursuant to law as a condition for receiving a covered Federal award include

those required by law or regulation, or reasonably expected to be required by law or regulation, and any other requirements in the actual award documents.

(d) Only those services expressly authorized by this section are allowable under this section.

§ 20.210 Reporting.

No reporting is required with respect to payments of reasonable compensation made to regularly employed officers or employees of a person.

Subpart C—Activities by Other Than Own Employees

§ 20.300 Professional and technical services.

(a) The prohibition on the use of appropriated funds, in § 20.100 (a), does not apply in the case of any reasonable payment to a person, other than an officer or employee of a person requesting or receiving a covered Federal action, if the payment is for professional or technical services rendered directly in the preparation, submission, or negotiation of any bid, proposal, or application for that Federal contract, grant, loan, or cooperative agreement or for meeting requirements imposed by or pursuant to law as a condition for receiving that Federal contract, grant, loan, or cooperative agreement.

(b) The reporting requirements in § 20.110 (a) and (b) regarding filing a disclosure form by each person, if required, shall not apply with respect to professional or technical services rendered directly in the preparation, submission, or negotiation of any commitment providing for the United States to insure or guarantee a loan.

(c) For purposes of paragraph (a) of this section, ''professional and technical services'' shall be limited to advice and analysis directly applying any professional or technical discipline. For example, drafting or a legal document accompanying a bid or proposal by a lawyer is allowable. Similarly, technical advice provided by an engineer on the performance or operational capability of a piece of equipment rendered directly in the negotiation of a contract is allowable. However, communications with the intent to influence made by a professional (such as a licensed lawyer) or a technical person (such as a licensed accountant) are not allowable under this section unless they provide advice and analysis directly applying their professional or technical expertise and unless the advice or analysis is rendered directly and solely in the preparation, submission or negotiation of a covered Federal action. Thus, for example, communications with the intent to influence made by a lawyer that do not provide legal advice or analysis directly and solely related to the legal aspects of his or her client's proposal, but generally advocate one proposal over another are not allowable under this section because the lawyer is not providing professional legal services. Similarly, communications with the intent to influence made by an engineer providing an engineering analysis prior to the preparation or submission of a bid or proposal are not allowable under this section since the engineer is providing technical services but not directly in the preparation, submission or negotiation of a covered Federal action.

(d) Requirements imposed by or pursuant to law as a condition for receiving a covered Federal award include those required by law or regulation, or reasonably expected to be required by law or regulation, and any other requirements in the actual award documents.

(e) Persons other than officers or employees of a person requesting or receiving a covered Federal action include consultants and trade associations.

(f) Only those services expressly authorized by this section are allowable under this section.

Subpart D—Penalties and Enforcement

§ 20.400 Penalties.

(a) Any person who makes an expenditure prohibited herein shall be subject to a civil penalty of not less than $10,000 and not more than $100,000 for each such expenditure.

(b) Any person who fails to file or amend the disclosure form (see appendix B) to be filed or amended if required herein, shall be subject to a civil penalty of not less than $10,000 and not more than $100,000 for each such failure.

(c) A filing or amended filing on or after the date on which an administrative action for the imposition of a civil penalty is commenced does not prevent the imposition of such civil penalty for a failure occurring before that date. An administrative action is commenced with respect to a failure when an investigating official determines in writing to commence an investigation of an allegation of such failure.

(d) In determining whether to impose a civil penalty, and the amount of any such penalty, by reason of a violation by any person, the agency shall consider the nature, circumstances, extent, and gravity of the violation, the effect on the ability of such person to continue in business, any prior violations by such person, the degree of culpability of such person, the ability of the person to pay the penalty, and such other matters as may be appropriate.

(e) First offenders under paragraphs (a) or (b) of this section shall be subject to a civil penalty of $10,000, absent aggravating circumstances. Second and subsequent offenses by persons shall be subject to an appropriate civil penalty between $10,000 and $100,000, as determined by the agency head or his or her designee.

(f) An imposition of a civil penalty under this section does not prevent the United States from seeking any other remedy that may apply to the same conduct that is the basis for the imposition of such civil penalty.

§ 20.405 Penalty procedures.

Agencies shall impose and collect civil penalties pursuant to the provisions of the Program Fraud and Civil Remedies Act, 31 U.S.C. sections 3803 (except subsection (c)), 3804, 3805, 3806, 3807, 3808, and 3812, insofar as these provisions are not inconsistent with the requirements herein.

§ 20.410 Enforcement.

The head of each agency shall take such actions as are necessary to ensure that the provisions herein are vigorously implemented and enforced in that agency.

Subpart E—Exemptions

§ 20.500 Secretary of Defense.

(a) The Secretary of Defense may exempt, on a case-by-case basis, a covered Federal action from the prohibition whenever the Secretary determines, in writing, that such an exemption is in the national interest. The Secretary shall transmit a copy of each such written exemption to Congress immediately after making such a determination.

(b) The Department of Defense may issue supplemental regulations to implement paragraph (a) of this section.

Subpart F—Agency Reports

§ 20.600 Semi-annual compilation.

(a) The head of each agency shall collect and compile the disclosure reports (see appendix B) and, on May 31 and November 30 of each year, submit to the Secretary of the Senate and the Clerk of the House of Representatives a report containing a compilation of the information contained in the disclosure reports received during the six-month period ending on March 31 or September 30, respectively, of that year.

(b) The report, including the compilation, shall be available for public inspection 30 days after receipt of the report by the Secretary and the Clerk.

(c) Information that involves intelligence matters shall be reported only to the Select Committee on Intelligence of the Senate, the Permanent Select Committee on Intelligence of the House of Representatives, and the Committees on Appropriations of the Senate and the House of Representatives in accordance with procedures agreed to by such committees. Such information shall not be available for public inspection.

(d) Information that is classified under Executive Order 12356 or any successor order shall be reported only to the Committee on Foreign Relations of the Senate and the Committee on Foreign Affairs of the House of Representatives or the Committees on Armed

Services of the Senate and the House of Representatives (whichever such committees have jurisdiction of matters involving such information) and to the Committees on Appropriations of the Senate and the House of Representatives in accordance with procedures agreed to by such committees. Such information shall not be available for public inspection.

(e) The first semi-annual compilation shall be submitted on May 31, 1990, and shall contain a compilation of the disclosure reports received from December 23, 1989 to March 31, 1990.

(f) Major agencies, designated by the Office of Management and Budget (OMB), are required to provide machine-readable compilations to the Secretary of the Senate and the Clerk of the House of Representatives no later than with the compilations due on May 31, 1991. OMB shall provide detailed specifications in a memorandum to these agencies.

(g) Non-major agencies are requested to provide machine-readable compilations to the Secretary of the Senate and the Clerk of the House of Representatives.

(h) Agencies shall keep the originals of all disclosure reports in the official files of the agency.

§ 20.605 Inspector General report.

(a) The Inspector General, or other official as specified in paragraph (b) of this section, of each agency shall prepare and submit to Congress each year, commencing with submission of the President's Budget in 1991, an evaluation of the compliance of that agency with, and the effectiveness of, the requirements herein. The evaluation may include any recommended changes that may be necessary to strengthen or improve the requirements.

(b) In the case of an agency that does not have an Inspector General, the agency official comparable to an Inspector General shall prepare and submit the annual report, or, if there is no such comparable official, the head of the agency shall prepare and submit the annual report.

(c) The annual report shall be submitted at the same time the agency submits its annual budget justifications to Congress.

(d) The annual report shall include the following: All alleged violations relating to the agency's covered Federal actions during the year covered by the report, the actions taken by the head of the agency in the year covered by the report with respect to those alleged violations and alleged violations in previous years, and the amounts of civil penalties imposed by the agency in the year covered by the report.

APPENDIX A TO PART 20—CERTIFICATION REGARDING LOBBYING

Certification for Contracts, Grants, Loans, and Cooperative Agreements

The undersigned certifies, to the best of his or her knowledge and belief, that:

(1) No Federal appropriated funds have been paid or will be paid, by or on behalf of the undersigned, to any person for influencing or attempting to influence an officer or employee of an agency, a Member of Congress, an officer or employee of Congress, or an employee of a Member of Congress in connection with the awarding of any Federal contract, the making of any Federal grant, the making of any Federal loan, the entering into of any cooperative agreement, and the extension, continuation, renewal, amendment, or modification of any Federal contract, grant, loan, or cooperative agreement.

(2) If any funds other than Federal appropriated funds have been paid or will be paid to any person for influencing or attempting to influence an officer or employee of any agency, a Member of Congress, an officer or employee of Congress, or an employee of a Member of Congress in connection with this Federal contract, grant, loan, or cooperative agreement, the undersigned shall complete and submit Standard Form-LLL, ''Disclosure Form to Report Lobbying,'' in accordance with its instructions.

(3) The undersigned shall require that the language of this certification be included in the award documents for all subawards at all tiers (including subcontracts, subgrants, and contracts under grants, loans, and cooperative agreements) and that all subrecipients shall certify and disclose accordingly.

This certification is a material representation of fact upon which reliance was placed when this transaction was made or entered into. Submission of this certification is a prerequisite for making or entering into this transaction imposed by section 1352, title 31, U.S. Code. Any person who fails to file the required certification shall be subject to a civil penalty of not less than $10,000 and not more than $100,000 for each such failure.

Statement for Loan Guarantees and Loan Insurance

The undersigned states, to the best of his or her knowledge and belief, that:

If any funds have been paid or will be paid to any person for influencing or attempting to influence an officer or employee of any agency, a Member of Congress, an officer or employee of Congress, or an employee of a Member of Congress in connection with this commitment providing for the United States to insure or guarantee a loan, the undersigned shall complete and submit Standard Form-LLL, ''Disclosure Form to Report Lobbying,'' in accordance with its instructions.

Submission of this statement is a prerequisite for making or entering into this transaction imposed by section 1352, title 31, U.S. Code. Any person who fails to file the required statement shall be subject to a civil penalty of not less than $10,000 and not more than $100,000 for each such failure.

APPENDIX B TO PART 20—DISCLOSURE FORM TO REPORT LOBBYING

DISCLOSURE OF LOBBYING ACTIVITIES

Approved by OMB
0348-0046

Complete this form to disclose lobbying activities pursuant to 31 U.S.C. 1352
(See reverse for public burden disclosure.)

1. Type of Federal Action:	2. Status of Federal Action:	3. Report Type:
☐ a. contract b. grant c. cooperative agreement d. loan e. loan guarantee f. loan insurance	☐ a. bid/offer/application b. initial award c. post-award	☐ a. initial filing b. material change **For Material Change Only:** year _____ quarter _____ date of last report _____

4. Name and Address of Reporting Entity:	5. If Reporting Entity in No. 4 is Subawardee, Enter Name and Address of Prime:
☐ Prime ☐ Subawardee Tier _____, *if known*: **Congressional District,** *if known*:	 **Congressional District,** *if known*:
6. Federal Department/Agency:	**7. Federal Program Name/Description:** CFDA Number, *if applicable*: _____
8. Federal Action Number, *if known*:	**9. Award Amount,** *if known*: $
10. a. Name and Address of Lobbying Entity *(if individual, last name, first name, MI)*:	**b. Individuals Performing Services** *(including address if different from No. 10a)* *(last name, first name, MI)*:
(attach Continuation Sheet(s) SF-LLL-A, if necessary)	
11. Amount of Payment *(check all that apply)*: $ _____ ☐ actual ☐ planned	**13. Type of Payment** *(check all that apply)*: ☐ a. retainer ☐ b. one-time fee ☐ c. commission ☐ d. contingent fee ☐ e. deferred ☐ f. other; specify: _____
12. Form of Payment *(check all that apply)*: ☐ a. cash ☐ b. in-kind; specify: nature _____ value _____	
14. Brief Description of Services Performed or to be Performed and Date(s) of Service, including officer(s), employee(s), or Member(s) contacted, for Payment Indicated in Item 11: *(attach Continuation Sheet(s) SF-LLL-A, if necessary)*	
15. Continuation Sheet(s) SF-LLL-A attached: ☐ Yes ☐ No	
16. Information requested through this form is authorized by title 31 U.S.C. section 1352. This disclosure of lobbying activities is a material representation of fact upon which reliance was placed by the tier above when this transaction was made or entered into. This disclosure is required pursuant to 31 U.S.C. 1352. This information will be reported to the Congress semi-annually and will be available for public inspection. Any person who fails to file the required disclosure shall be subject to a civil penalty of not less than $10,000 and not more than $100,000 for each such failure.	**Signature:** _____ **Print Name:** _____ **Title:** _____ **Telephone No.:** _____ **Date:** _____
Federal Use Only	**Authorized for Local Reproduction** **Standard Form - LLL**

This disclosure form shall be completed by the reporting entity, whether subawardee or prime Federal recipient, at the initiation or receipt of a covered Federal action, or a material change to a previous filing, pursuant to title 31 U.S.C. section 1352. The filing of a form is required for each payment or agreement to make payment to any lobbying entity for influencing or attempting to influence an officer or employee of any agency, a Member of Congress, an officer or employee of Congress, or an employee of a Member of Congress in connection with a covered Federal action. Use the SF-LLL-A Continuation Sheet for additional information if the space on the form is inadequate. Complete all items that apply for both the initial filing and material change report. Refer to the implementing guidance published by the Office of Management and Budget for additional information.

1. Identify the type of covered Federal action for which lobbying activity is and/or has been secured to influence the outcome of a covered Federal action.
2. Identify the status of the covered Federal action.
3. Identify the appropriate classification of this report. If this is a followup report caused by a material change to the information previously reported, enter the year and quarter in which the change occurred. Enter the date of the last previously submitted report by this reporting entity for this covered Federal action.
4. Enter the full name, address, city, state and zip code of the reporting entity. Include Congressional District, if known. Check the appropriate classification of the reporting entity that designates if it is, or expects to be, a prime or subaward recipient. Identify the tier of the subawardee, e.g., the first subawardee of the prime is the 1st tier. Subawards include but are not limited to subcontracts, subgrants and contract awards under grants.
5. If the organization filing the report in item 4 checks "Subawardee", then enter the full name, address, city, state and zip code of the prime Federal recipient. Include Congressional District, if known.
6. Enter the name of the Federal agency making the award or loan commitment. Include at least one organizational level below agency name, if known. For example, Department of Transportation, United States Coast Guard.
7. Enter the Federal program name or description for the covered Federal action (item 1). If known, enter the full Catalog of Federal Domestic Assistance (CFDA) number for grants, cooperative agreements, loans, and loan commitments.
8. Enter the most appropriate Federal identifying number available for the Federal action identified in item 1 (e.g., Request for Proposal (RFP) number; Invitation for Bid (IFB) number; grant announcement number; the contract, grant, or loan award number; the application/proposal control number assigned by the Federal agency). Include prefixes, e.g., "RFP-DE-90-001."
9. For a covered Federal action where there has been an award or loan commitment by the Federal agency, enter the Federal amount of the award/loan commitment for the prime entity identified in item 4 or 5.
10. (a) Enter the full name, address, city, state and zip code of the lobbying entity engaged by the reporting entity identified in item 4 to influence the covered Federal action.

    (b) Enter the full names of the individual(s) performing services, and include full address if different from 10 (a). Enter Last Name, First Name, and Middle Initial (MI).
11. Enter the amount of compensation paid or reasonably expected to be paid by the reporting entity (item 4) to the lobbying entity (item 10). Indicate whether the payment has been made (actual) or will be made (planned). Check all boxes that apply. If this is a material change report, enter the cumulative amount of payment made or planned to be made.
12. Check the appropriate box(es). Check all boxes that apply. If payment is made through an in-kind contribution, specify the nature and value of the in-kind payment.
13. Check the appropriate box(es). Check all boxes that apply. If other, specify nature.
14. Provide a specific and detailed description of the services that the lobbyist has performed, or will be expected to perform, and the date(s) of any services rendered. Include all preparatory and related activity, not just time spent in actual contact with Federal officials. Identify the Federal official(s) or employee(s) contacted or the officer(s), employee(s), or Member(s) of Congress that were contacted.
15. Check whether or not a SF-LLL-A Continuation Sheet(s) is attached.
16. The certifying official shall sign and date the form, print his/her name, title, and telephone number.

Public reporting burden for this collection of information is estimated to average 30 mintues per response, including time for reviewing instructions, searching existing data sources, gathering and maintaining the data needed, and completing and reviewing the collection of information. Send comments regarding the burden estimate or any other aspect of this collection of information, including suggestions for reducing this burden, to the Office of Management and Budget, Paperwork Reduction Project (0348-0046), Washington, D.C. 20503.

DISCLOSURE OF LOBBYING ACTIVITIES
CONTINUATION SHEET

Approved by OMB
0348-0046

Reporting Entity: _____ **Page** _____ **of** _____

Authorized for Local Reproduction
Standard Form - LLL-A

PART 21—NONDISCRIMINATION IN FEDERALLY-ASSISTED PROGRAMS OF THE DEPARTMENT OF TRANSPORTATION—EFFECTUATION OF TITLE VI OF THE CIVIL RIGHTS ACT OF 1964

Sec.
21.1 Purpose.
21.3 Application of this part.
21.5 Discrimination prohibited.
21.7 Assurances required.
21.9 Compliance information.
21.11 Conduct of investigations.
21.13 Procedure for effecting compliance.
21.15 Hearings.
21.17 Decisions and notices.
21.19 Judicial review.
21.21 Effect on other regulations, forms, and instructions.
21.23 Definitions.

APPENDIX A TO PART 21—ACTIVITIES TO WHICH THIS PART APPLIES

APPENDIX B TO PART 21—ACTIVITIES TO WHICH THIS PART APPLIES WHEN A PRIMARY OBJECTIVE OF THE FEDERAL FINANCIAL ASSISTANCE IS TO PROVIDE EMPLOYMENT

APPENDIX C TO PART 21—APPLICATION OF PART 21 TO CERTAIN FEDERAL FINANCIAL ASSISTANCE OF THE DEPARTMENT OF TRANSPORTATION

AUTHORITY: 42 U.S.C. 2000d-2000d–7.

SOURCE: 35 FR 10080, June 18, 1970, unless otherwise noted.

§ 21.1 Purpose.

The purpose of this part is to effectuate the provisions of title VI of the Civil Rights Act of 1964 (hereafter referred to as the Act) to the end that no person in the United States shall, on the grounds of race, color, or national origin, be excluded from participation in, be denied the benefits of, or be otherwise subjected to discrimination under any program or activity receiving Federal financial assistance from the Department of Transportation.

§ 21.3 Application of this part.

(a) This part applies to any program for which Federal financial assistance is authorized under a law administered by the Department, including the types of Federal financial assistance listed in appendix A to this part. It also applies to money paid, property transferred, or other Federal financial assistance extended after the effective date of this part pursuant to an application approved before that effective date. This part does not apply to:

(1) Any Federal financial assistance by way of insurance or guaranty contracts;

(2) Money paid, property transferred, or other assistance extended before the effective date of this part, except where such assistance was subject to the title VI regulations of any agency whose responsibilities are now exercised by this Department;

(3) Any assistance to any individual who is the ultimate beneficiary; or

(4) Any employment practice, under any such program, of any employer, employment agency, or labor organization, except to the extent described in § 21.5(c).

The fact that a type of Federal financial assistance is not listed in appendix A to this part shall not mean, if title VI of the Act is otherwise applicable, that a program is not covered. Other types of Federal financial assistance under statutes now in force or hereinafter enacted may be added to appendix A to this part.

(b) In any program receiving Federal financial assistance in the form, or for the acquisition, of real property or an interest in real property, to the extent that rights to space on, over, or under any such property are included as part of the program receiving that assistance, the nondiscrimination requirement of this part shall extend to any facility located wholly or in part in that space.

[35 FR 10080, June 18, 1970, as amended at 68 FR 51389, Aug. 26, 2003]

§ 21.5 Discrimination prohibited.

(a) *General.* No person in the United States shall, on the grounds of race, color, or national origin be excluded from participation in, be denied the benefits of, or be otherwise subjected to discrimination under, any program to which this part applies.

(b) Specific discriminatory actions prohibited:

(1) A recipient to which this part applies may not, directly or through contractual or other arrangements, on the grounds of race, color, or national origin.

(i) Deny a person any service, financial aid, or other benefit provided under the program;

(ii) Provide any service, financial aid, or other benefit to a person which is different, or is provided in a different manner, from that provided to others under the program;

(iii) Subject a person to segregation or separate treatment in any matter related to his receipt of any service, financial aid, or other benefit under the program;

(iv) Restrict a person in any way in the enjoyment of any advantage or privilege enjoyed by others receiving any service, financial aid, or other benefit under the program;

(v) Treat a person differently from others in determining whether he satisfies any admission, enrollment, quota, eligibility, membership, or other requirement or condition which persons must meet in order to be provided any service, financial aid, or other benefit provided under the program;

(vi) Deny a person an opportunity to participate in the program through the provision of services or otherwise or afford him an opportunity to do so which is different from that afforded others under the program; or

(vii) Deny a person the opportunity to participate as a member of a planning, advisory, or similar body which is an integral part of the program.

(2) A recipient, in determining the types of services, financial aid, or other benefits, or facilities which will be provided under any such program, or the class of person to whom, or the situations in which, such services, financial aid, other benefits, or facilities will be provided under any such program, or the class of persons to be afforded an opportunity to participate in any such program; may not, directly or through contractual or other arrangements, utilize criteria or methods of administration which have the effect of subjecting persons to discrimination because of their race, color, or national origin, or have the effect of defeating or substantially impairing accomplishment of the objectives of the program with respect to individuals of a particular race, color, or national origin.

(3) In determining the site or location of facilities, a recipient or applicant may not make selections with the purpose or effect of excluding persons from, denying them the benefits of, or subjecting them to discrimination under any program to which this regulation applies, on the grounds of race, color, or national origin; or with the purpose or effect of defeating or substantially impairing the accomplishment of the objectives of the Act or this part.

(4) As used in this section the services, financial aid, or other benefits provided under a program receiving Federal financial assistance include any service, financial aid, or other benefit provided in or through a facility provided with the aid of Federal financial assistance.

(5) The enumeration of specific forms of prohibited discrimination in this paragraph does not limit the generality of the prohibition in paragraph (a) of this section.

(6) Examples demonstrating the application of the provisions of this section to certain types of Federal financial assistance administered by the Department of Transportation are contained in appendix C of this part.

(7) This part does not prohibit the consideration of race, color, or national origin if the purpose and effect are to remove or overcome the consequences of practices or impediments which have restricted the availability of, or participation in, the program or activity receiving Federal financial assistance, on the grounds of race, color, or national origin. Where prior discriminatory practice or usage tends, on the grounds of race, color, or national origin to exclude individuals from participation in, to deny them the benefits of, or to subject them to discrimination under any program or activity to which this part applies, the applicant or recipient must take affirmative action to remove or overcome the effects of the prior discriminatory practice or usage. Even in the absence of prior discriminatory practice or usage, a recipient in administering a program or activity to which this part applies, is expected to take affirmative action to assure that no person is excluded from participation in or denied the benefits of the program or activity on the

grounds of race, color, or national origin.

(c) Employment practices:

(1) Where a primary objective of the Federal financial assistance to a program to which this part applies is to provide employment, a recipient or other party subject to this part shall not, directly or through contractual or other arrangements, subject a person to discrimination on the ground of race, color, or national origin in its employment practices under such program (including recruitment or recruitment advertising, hiring, firing, upgrading, promotion, demotion, transfer, layoff, termination, rates of pay or other forms of compensation or benefits, selection for training or apprenticeship, use of facilities, and treatment of employees). Such recipient shall take affirmative action to insure that applicants are employed, and employees are treated during employment, without regard to their race, color, or national origin. The requirements applicable to construction employment under any such program shall be those specified in or pursuant to Part III of Executive Order 11246 or any Executive order which supersedes it.

(2) Federal financial assistance to programs under laws funded or administered by the Department which have as a primary objective the providing of employment include those set forth in appendix B to this part.

(3) Where a primary objective of the Federal financial assistance is not to provide employment, but discrimination on the grounds of race, color, or national origin in the employment practices of the recipient or other persons subject to the regulation tends, on the grounds of race, color, or national origin, to exclude individuals from participation in, to deny them the benefits of, or to subject them to discrimination under any program to which this regulation applies, the provisions of paragraph (c)(1) of this section shall apply to the employment practices of the recipient or other persons subject to the regulation, to the extent necessary to assure equality of opportunity to, and nondiscriminatory treatment of, beneficiaries.

(d) A recipient may not make a selection of a site or location of a facility if the purpose of that selection, or its effect when made, is to exclude individuals from participation in, to deny them the benefits of, or to subject them to discrimination under any program or activity to which this rule applies, on the grounds of race, color, or national origin; or if the purpose is to, or its effect when made will, substantially impair the accomplishment of the objectives of this part.

[35 FR 10080, June 18, 1970, as amended by Amdt. 72–2, 38 FR 17997, July 5, 1973; 68 FR 51389, Aug. 26, 2003]

§ 21.7 Assurances required.

(a) *General.* (1) Every application for Federal financial assistance to which this part applies, except an application to which paragraph (b) of this section applies, and every application for Federal financial assistance to provide a facility shall, as a condition to its approval and the extension of any Federal financial assistance pursuant to the application, contain or be accompanied by, an assurance that the program will be conducted or the facility operated in compliance with all requirements imposed by or pursuant to this part. Every awardof Federal financial assistance shall require the submission of such an assurance. In the case where the Federal financial assistance is to provide or is in the form of personal property, or real property or interest therein or structures thereon, the assurance shall obligate the recipient, or, in the case of a subsequent transfer, the transferee, for the period during which the property is used for a purpose for which the Federal financial assistance is extended or for another purpose involving the provision of similar services or benefits, or for as long as the recipient retains ownership or possession of the property, whichever is longer. In all other cases the assurance shall obligate the recipient for the period during which Federal financial assistance is extended to the program. The Secretary shall specify the form of the foregoing assurances, and the extent to which like assurances will be required of subgrantees, contractors and subcontractors, transferees, successors in interest, and other

participants. Any such assurance shall include provisions which give the United States a right to seek its judicial enforcement.

(2) In the case where Federal financial assistance is provided in the form of a transfer of real property, structures, or improvements thereon, or interest therein, from the Federal Government, the instrument effecting or recording the transfer shall contain a covenant running with the land assuring nondiscrimination for the period during which the real property is used for a purpose for which the Federal financial assistance is extended or for another purpose involving the provision of similar services or benefits. Where no transfer of property or interest therein from the Federal Government is involved, but property is acquired or improved with Federal financial assistance, the recipient shall agree to include such covenant in any subsequent transfer of such property. When the property is obtained from the Federal Government, such covenant may also include a condition coupled with a right to be reserved by the Department to revert title to the property in the event of a breach of the covenant where, in the discretion of the Secretary, such a condition and right of reverter is appropriate to the statute under which the real property is obtained and to the nature of the grant and the grantee. In such event if a transferee of real property proposes to mortgage or otherwise encumber the real property as security for financing construction of new, or improvement of existing, facilities on such property for the purposes for which the property was transferred, the Secretary may agree, upon request of the transferee and if necessary to accomplish such financing, and upon such conditions as he deems appropriate, to subordinate such right of reversion to the lien of such mortgage or other encumbrance.

(b) *Continuing Federal financial assistance.* Every application by a State or a State agency for continuing Federal financial assistance to which this part applies (including the types of Federal financial assistance listed in appendix A to this part) shall as a condition to its approval and the extension of any Federal financial assistance pursuant to the application: (1) Contain or be accompanied by a statement that the program is (or, in the case of a new program, will be) conducted in compliance with all requirements imposed by or pursuant to this part, and (2) provide or be accompanied by provision for such methods of administration for the program as are found by the Secretary to give reasonable guarantee that the applicant and all recipients of Federal financial assistance under such program will comply with all requirements imposed by or pursuant to this part.

[35 FR 10080, June 18, 1970, as amended at 68 FR 51389, Aug. 26, 2003]

§ 21.9 Compliance information.

(a) *Cooperation and assistance.* The Secretary shall to the fullest extent practicable seek the cooperation of recipients in obtaining compliance with this part and shall provide assistance and guidance to recipients to help them comply voluntarily with this part.

(b) *Compliance reports.* Each recipient shall keep such records and submit to the Secretary timely, complete, and accurate compliance reports at such times, and in such form and containing such information, as the Secretary may determine to be necessary to enable him to ascertain whether the recipient has complied or is complying with this part. In the case in which a primary recipient extends Federal financial assistance to any other recipient, such other recipient shall also submit such compliance reports to the primary recipient as may be necessary to enable the primary recipient to carry out its obligations under this part. In general recipients should have available for the Secretary racial and ethnic data showing the extent to which members of minority groups are beneficiaries of programs receiving Federal financial assistance.

(c) *Access to sources of information.* Each recipient shall permit access by the Secretary during normal business hours to such of its books, records, accounts, and other sources of information, and its facilities as may be pertinent to ascertain compliance with this part. Where any information required

of a recipient is in the exclusive possession of any other agency, institution, or person and this agency, institution, or person fails or refuses to furnish this information, the recipient shall so certify in its report and shall set forth what efforts it has made to obtain the information.

(d) *Information to beneficiaries and participants.* Each recipient shall make available to participants, beneficiaries, and other interested persons such information regarding the provisions of this part and its applicability to the program for which the recipient receives Federal financial assistance, and make such information available to them in such manner, as the Secretary finds necessary to apprise such persons of the protections against discrimination assured them by the Act and this part.

[35 FR 10080, June 18, 1970, as amended by Amdt. 72–2, 38 FR 17997, July 5, 1973; 68 FR 51389, Aug. 26, 2003]

§ 21.11 Conduct of investigations.

(a) *Periodic compliance reviews.* The Secretary shall from time to time review the practices of recipients to determine whether they are complying with this part.

(b) *Complaints.* Any person who believes himself or any specific class of persons to be subjected to discrimination prohibited by this part may by himself or by a representative file with the Secretary a written complaint. A complaint must be filed not later than 180 days after the date of the alleged discrimination, unless the time for filing is extended by the Secretary.

(c) *Investigations.* The Secretary will make a prompt investigation whenever a compliance review, report, complaint, or any other information indicates a possible failure to comply with this part. The investigation will include, where appropriate, a review of the pertinent practices and policies of the recipient, the circumstances under which the possible noncompliance with this part occurred, and other factors relevant to a determination as to whether the recipient has failed to comply with this part.

(d) *Resolution of matters.* (1) If an investigation pursuant to paragraph (c) of this section indicates a failure to comply with this part, the Secretary will so inform the recipient and the matter will be resolved by informal means whenever possible. If it has been determined that the matter cannot be resolved by informal means, action will be taken as provided for in § 21.13.

(2) If an investigation does not warrant action pursuant to paragraph (d)(1) of this section the Secretary will so inform the recipient and the complainant, if any, in writing.

(e) *Intimidatory or retaliatory acts prohibited.* No recipient or other person shall intimidate, threaten, coerce, or discriminate against any individual for the purpose of interfering with any right or privilege secured by section 601 of the Act or this part, or because he has made a complaint, testified, assisted, or participated in any manner in an investigation, proceeding, or hearing under this part. The identity of complainants shall be kept confidential except to the extent necessary to carry out the purposes of this part, including the conduct of any investigation, hearing, or judicial proceeding arising thereunder.

[35 FR 10080, June 18, 1970, as amended by Amdt. 72–2, 38 FR 17997, July 5, 1973]

§ 21.13 Procedure for effecting compliance.

(a) *General.* If there appears to be a failure or threatened failure to comply with this part, and if the noncompliance or threatened noncompliance cannot be corrected by informal means, compliance with this part may be effected by the suspension or termination of or refusal to grant or to continue Federal financial assistance or by any other means authorized by law. Such other means may include, but are not limited to: (1) A reference to the Department of Justice with a recommendation that appropriate proceedings be brought to enforce any rights of the United States under any law of the United States (including other titles of the Act), or any assurance or other contractual undertaking, and (2) any applicable proceeding under State or local law.

(b) *Noncompliance with § 21.7.* If an applicant fails or refuses to furnish an assurance required under § 21.7 or otherwise fails or refuses to comply with a

requirement imposed by or pursuant to that section, Federal financial assistance may be refused in accordance with the procedures of paragraph (c) of this section. The Department shall not be required to provide assistance in such a case during the pendency of the administrative proceedings under such paragraph. However, subject to §21.21, the Department shall continue assistance during the pendency of such proceedings where such assistance is due and payable pursuant to an application approved prior to the effective date of this part.

(c) *Termination of or refusal to grant or to continue Federal financial assistance.* No order suspending, terminating, or refusing to grant or continue Federal financial assistance shall become effective until:

(1) The Secretary has advised the applicant or recipient of his failure to comply and has determined that compliance cannot be secured by voluntary means;

(2) There has been an express finding on the record, after opportunity for hearing, of a failure by the applicant or recipient to comply with a requirement imposed by or pursuant to this part;

(3) The action has been approved by the Secretary pursuant to §21.17(e); and

(4) The expiration of 30 days after the Secretary has filed with the committee of the House and the committee of the Senate having legislative jurisdiction over the program involved, a full written report of the circumstances and the grounds for such action.

Any action to suspend or terminate or to refuse to grant or to continue Federal financial assistance shall be limited to the particular political entity, or part thereof, or other applicant or recipient as to whom such a finding has been made and shall be limited in its effect to the particular program, or part thereof, in which such noncompliance has been so found.

(d) *Other means authorized by law.* No action to effect compliance with title VI of the Act by any other means authorized by law shall be taken by this Department until:

(1) The Secretary has determined that compliance cannot be secured by voluntary means;

(2) The recipient or other person has been notified of its failure to comply and of the action to be taken to effect compliance; and

(3) The expiration of at least 10 days from the mailing of such notice to the recipient or other person. During this period of at least 10 days, additional efforts shall be made to persuade the recipient or other person to comply with the regulation and to take such corrective action as may be appropriate.

§ 21.15 Hearings.

(a) *Opportunity for hearing.* Whenever an opportunity for a hearing is required by §21.13(c), reasonable notice shall be given by registered or certified mail, return receipt requested, to the affected applicant or recipient. This notice shall advise the applicant or recipient of the action proposed to be taken, the specific provision under which the proposed action against it is to be taken, and the matters of fact or law asserted as the basis for this action, and either: (1) Fix a date not less than 20 days after the date of such notice within which the applicant or recipient may request of the Secretary that the matter be scheduled for hearing or (2) advise the applicant or recipient that the matter in question has been set down for hearing at a stated place and time. The time and place so fixed shall be reasonable and shall be subject to change for cause. The complainant, if any, shall be advised of the time and place of the hearing. An applicant or recipient may waive a hearing and submit written information and argument for the record. The failure of an applicant or recipient to request a hearing under this paragraph or to appear at a hearing for which a date has been set shall be deemed to be a waiver of the right to a hearing under section 602 of the Act and §21.13(c) and consent to the making of a decision on the basis of such information as is available.

(b) *Time and place of hearing.* Hearings shall be held at the offices of the Department in Washington, D.C., at a time fixed by the Secretary unless he determines that the convenience of the applicant or recipient or of the Department requires that another place be selected. Hearings shall be held before

the Secretary, or at his discretion, before a hearing examiner appointed in accordance with section 3105 of title 5, United States Code, or detailed under section 3344 of title 5, United States Code.

(c) *Right to counsel.* In all proceedings under this section, the applicant or recipient and the Department shall have the right to be represented by counsel.

(d) *Procedures, evidence, and record.* (1) The hearing, decision, and any administrative review thereof shall be conducted in conformity with sections 554 through 557 of title 5, United States Code, and in accordance with such rules of procedure as are proper (and not inconsistent with this section) relating to the conduct of the hearing, giving of notices subsequent to those provided for in paragraph (a) of this section, taking of testimony, exhibits, arguments and briefs, requests for findings, and other related matters. Both the Department and the applicant or recipient shall be entitled to introduce all relevant evidence on the issues as stated in the notice for hearing or as determined by the officer conducting the hearing at the outset of or during the hearing.

(2) Technical rules of evidence do not apply to hearings conducted pursuant to this part, but rules or principles designed to assure production of the most credible evidence available and to subject testimony to test by cross-examination shall be applied where reasonably necessary by the officer conducting the hearing. The hearing officer may exclude irrelevant, immaterial, or unduly repetitious evidence. All documents and other evidence offered or taken for the record shall be open to examination by the parties and opportunity shall be given to refute facts and arguments advanced on either side of the issues. A transcript shall be made of the oral evidence except to the extent the substance thereof is stipulated for the record. All decisions shall be based upon the hearing record and written findings shall be made.

(e) *Consolidated or joint hearings.* In cases in which the same or related facts are asserted to constitute noncompliance with this part with respect to two or more Federal statutes, authorities, or other means by which Federal financial assistance is extended and to which this part applies, or noncompliance with this part and the regulations of one or more other Federal departments or agencies issued under title VI of the Act, the Secretary may, by agreement with such other departments or agencies, where applicable, provide for the conduct of consolidated or joint hearings, and for the application to such hearings of rules or procedures not inconsistent with this part. Final decisions in such cases, insofar as this regulation is concerned, shall be made in accordance with § 21.17.

[35 FR 10080, June 18, 1970, as amended at 68 FR 51389, Aug. 26, 2003]

§ 21.17 Decisions and notices.

(a) *Procedure on decisions by hearing examiner.* If the hearing is held by a hearing examiner, the hearing examiner shall either make an initial decision, if so authorized, or certify the entire record including his recommended findings and proposed decision to the Secretary for a final decision, and a copy of such initial decision or certification shall be mailed to the applicant or recipient. Where the initial decision is made by the hearing examiner the applicant or recipient may, within 30 days after the mailing of such notice of initial decision, file with the Secretary his exceptions to the initial decision, with his reasons therefor. In the absence of exceptions, the Secretary may, on his own motion, within 45 days after the initial decision, serve on the applicant or recipient a notice that he will review the decision. Upon the filing of such exceptions or of notice of review, the Secretary shall review the initial decision and issue his own decision thereon including the reasons therefor. In the absence of either exceptions or a notice of review the initial decision shall, subject to paragraph (e) of this section, constitute the final decision of the Secretary.

(b) *Decisions on record or review by the Secretary.* Whenever a record is certified to the Secretary for decision or he reviews the decision of a hearing examiner pursuant to paragraph (a) of this section, or whenever the Secretary conducts the hearing, the applicant or

recipient shall be given reasonable opportunity to file with him briefs or other written statements of its contentions, and a written copy of the final decision of the Secretary shall be sent to the applicant or recipient and to the complainant, if any.

(c) *Decisions on record where a hearing is waived.* Whenever a hearing is waived pursuant to §21.15, a decision shall be made by the Secretary on the record and a written copy of such decision shall be sent to the applicant or recipient, and to the complainant, if any.

(d) *Rulings required.* Each decision of a hearing examiner or the Secretary shall set forth his ruling on each finding, conclusion, or exception presented, and shall identify the requirement or requirements imposed by or pursuant to this part with which it is found that the applicant or recipient has failed to comply.

(e) *Approval by Secretary.* Any final decision by an official of the Department, other than the Secretary personally, which provides for the suspension or termination of, or the refusal to grant or continue Federal financial assistance, or the imposition of any other sanction available under this part or the Act, shall promptly be transmitted to the Secretary personally, who may approve such decision, may vacate it, or remit or mitigate any sanction imposed.

(f) *Content of orders.* The final decision may provide for suspension or termination of, or refusal to grant or continue Federal financial assistance, in whole or in part, to which this regulation applies, and may contain such terms, conditions, and other provisions as are consistent with and will effectuate the purposes of the Act and this part, including provisions designed to assure that no Federal financial assistance to which this regulation applies will thereafter be extended to the applicant or recipient determined by such decision to be in default in its performance of an assurance given by it pursuant to this part, or to have otherwise failed to comply with this part, unless and until it corrects its noncompliance and satisfies the Secretary that it will fully comply with this part.

(g) *Post termination proceedings.* (1) An applicant or recipient adversely affected by an order issued under paragraph (f) of this section shall be restored to full eligibility to receive Federal financial assistance if it satisfies the terms and conditions of that order for such eligibility or if it brings itself into compliance with this part and provides reasonable assurance that it will fully comply with this part.

(2) Any applicant or recipient adversely affected by an order entered pursuant to paragraph (f) of this section may at any time request the Secretary to restore fully its eligibility to receive Federal financial assistance. Any such request shall be supported by information showing that the applicant or recipient has met the requirements of paragraph (g)(1) of this section. If the Secretary determines that those requirements have been satisfied, he shall restore such eligibility.

(3) If the Secretary denies any such request, the applicant or recipient may submit a request for a hearing in writing, specifying who it believes such official to have been in error. It shall thereupon be given an expeditious hearing, with a decision on the record in accordance with rules or procedures issued by the Secretary. The applicant or recipient will be restored to such eligibility if it proves at such a hearing that it satisfied the requirements of paragraph (g)(1) of this section.

While proceedings under this paragraph are pending, the sanctions imposed by the order issued under paragraph (f) of this section shall remain in effect.

[35 FR 10080, June 18, 1970, as amended at 68 FR 51389, Aug. 26, 2003]

§ 21.19 Judicial review.

Action taken pursuant to section 602 of the Act is subject to judicial review as provided in section 603 of the Act.

§ 21.21 Effect on other regulations, forms, and instructions.

(a) *Effect on other regulations.* All regulations, orders, or like directions issued before the effective date of this part by any officer of the Department which impose requirements designed to prohibit any discrimination against individuals on the grounds of race, color, or national origin under any program to which this part applies, and which

authorize the suspension or termination of or refusal to grant or to continue Federal financial assistance to any applicant for a recipient of such assistance for failure to comply with such requirements, are hereby superseded to the extent that such discrimination is prohibited by this part, except that nothing in this part may be considered to relieve any person of any obligation assumed or imposed under any such superseded regulation, order, instruction, or like direction before the effective date of this part. Nothing in this part, however, supersedes any of the following (including future amendments thereof): (1) Executive Order 11246 (3 CFR, 1965 Supp., p. 167) and regulations issued thereunder or (2) any other orders, regulations, or instructions, insofar as such orders, regulations, or instructions prohibit discrimination on the ground of race, color, or national origin in any program or situation to which this part is inapplicable, or prohibit discrimination on any other ground.

(b) *Forms and instructions.* The Secretary shall issue and promptly make available to all interested persons forms and detailed instructions and procedures for effectuating this part as applied to programs to which this part applies and for which he is responsible.

(c) *Supervision and coordination.* The Secretary may from time to time assign to officials of the Department, or to officials of other departments or agencies of the Government with the consent of such departments or agencies, responsibilities in connection with the effectuation of the purposes of title VI of the Act and this part (other than responsibility for final decision as provided in § 21.17), including the achievement of effective coordination and maximum uniformity within the Department and within the Executive Branch of the Government in the application of title VI and this part to similar programs and in similar situations. Any action taken, determination made or requirement imposed by an official of another department or agency acting pursuant to an assignment of responsibility under this paragraph shall have the same effect as though such action had been taken by the Secretary of this Department.

[35 FR 10080, June 18, 1970, as amended at 68 FR 51389, Aug. 26, 2003]

§ 21.23 Definitions.

Unless the context requires otherwise, as used in this part:

(a) *Applicant* means a person who submits an application, request, or plan required to be approved by the Secretary, or by a primary recipient, as a condition to eligibility for Federal financial assistance, and ''application'' means such an application, request, or plan.

(b) *Facility* includes all or any part of structures, equipment, or other real or personal property or interests therein, and the provision of facilities includes the construction, expansion, renovation, remodeling, alteration or acquisition of facilities.

(c) *Federal financial assistance* includes:

(1) Grants and loans of Federal funds;

(2) The grant or donation of Federal property and interests in property;

(3) The detail of Federal personnel;

(4) The sale and lease of, and the permission to use (on other than a casual or transient basis), Federal property or any interest in such property without consideration or at a nominal consideration, or at a consideration which is reduced for the purpose of assisting the recipient, or in recognition of the public interest to be served by such sale or lease to the recipient; and

(5) Any Federal agreement, arrangement, or other contract which has as one of its purposes the provision of assistance.

(d) *Primary recipient* means any recipient that is authorized or required to extend Federal financial assistance to another recipient.

(e) *Program or activity* and *program* mean all of the operations of any entity described in paragraphs (e)(1) through (4) of this section, any part of which is extended Federal financial assistance:

(1)(i) A department, agency, special purpose district, or other instrumentality of a State or of a local government; or

(ii) The entity of such State or local government that distributes such assistance and each such department or agency (and each other State or local government entity) to which the assistance is extended, in the case of assistance to a State or local government;

(2)(i) A college, university, or other postsecondary institution, or a public system of higher education; or

(ii) A local educational agency (as defined in 20 U.S.C. 7801), system of vocational education, or other school system;

(3)(i) An entire corporation, partnership, or other private organization, or an entire sole proprietorship—

(A) If assistance is extended to such corporation, partnership, private organization, or sole proprietorship as a whole; or

(B) Which is principally engaged in the business of providing education, health care, housing, social services, or parks and recreation; or

(ii) The entire plant or other comparable, geographically separate facility to which Federal financial assistance is extended, in the case of any other corporation, partnership, private organization, or sole proprietorship; or

(4) Any other entity which is established by two or more of the entities described in paragraph (e)(1), (2), or (3) of this section.

(f) *Recipient* may mean any State, territory, possession, the District of Columbia, or Puerto Rico, or any political subdivision thereof, or instrumentality thereof, any public or private agency, institution, or organization, or other entity, or any individual, in any State, territory, possession, the District of Columbia, or Puerto Rico, to whom Federal financial assistance is extended, directly or through another recipient, including any successor, assignee, or transferee thereof, but such term does not include any ultimate beneficiary.

(g) *Secretary* means the Secretary of Transportation or, except in §21.17 (e), any person to whom he has delegated his authority in the matter concerned.

[35 FR 10080, June 18, 1970, as amended at 68 FR 51389, Aug. 26, 2003]

APPENDIX A TO PART 21—ACTIVITIES TO WHICH THIS PART APPLIES

1. Use of grants made in connection with Federal-aid highway systems (23 U.S.C. 101 *et seq.*).

2. Use of grants made in connection with the Highway Safety Act of 1966 (23 U.S.C. 401 *et seq.*).

3. Use of grants in connection with the National Traffic and Motor Vehicle Safety Act of 1966 (15 U.S.C. 1391–1409, 1421–1425).

4. Lease of real property and the grant of permits, licenses, easements and rights-of-way covering real property under control of the Coast Guard (14 U.S.C. 93 (n) and (o)).

5. Utilization of Coast Guard personnel and facilities by any State, territory, possession, or political subdivision thereof (14 U.S.C. 141(a)).

6. Use of Coast Guard personnel for duty in connection with maritime instruction and training by the States, territories, and Puerto Rico (14 U.S.C. 148).

7. Use of obsolete and other Coast Guard material by sea scout service of Boy Scouts of America, any incorporated unit of the Coast Guard auxiliary, and public body or private organization not organized for profit (14 U.S.C. 641(a)).

8. U.S. Coast Guard Auxiliary Program (14 U.S.C. 821–832).

9. Use of grants for the support of basic scientific research by nonprofit institutions of higher education and nonprofit organizations whose primary purpose is conduct of scientific research (42 U.S.C. 1891).

10. Use of grants made in connection with the Federal-aid Airport Program (secs. 1–15 and 17–20 of the Federal Airport Act, 49 U.S.C. 1101–1114, 1116–1120).

11. Use of U.S. land acquired for public airports under:

a. Section 16 of the Federal Airport Act, 49 U.S.C. 1115; and

b. Surplus Property Act (sec. 13(g) of the Surplus Property Act of 1944, 50 U.S.C. App. 1622(g), and sec. 3 of the Act of Oct. 1, 1949, 50 U.S.C. App. 1622b).

12. Activities carried out in connection with the Aviation Education Program of the Federal Aviation Administration under sections 305, 311, and 313(a) of the Federal Aviation Act of 1958, as amended (49 U.S.C. 1346, 1352, and 1354(a)).

13. Use of grants and loans made in connection with Urban Mass Transportation Capital Facilities Grant and Loan Program—Urban Mass Transportation Act of 1964, as amended (49 U.S.C. 1602).

14. Use of grants made in connection with Urban Mass Transportation Research and Demonstration Grant Program—Urban Mass Transportation Act of 1964, as amended (49 U.S.C. 1605).

15. Use of grants made in connection with Urban Mass Transportation Technical Studies Grant Program—Urban Mass Transportation Act of 1964, as amended (49 U.S.C. 1607a).

16. Use of grants made in connection with Urban Mass Transportation Managerial Training Grant Program—Urban Mass Transportation Act of 1964, as amended (49 U.S.C. 1607b).

17. Use of grants made in connection with Urban Mass Transportation Grants for Research and Training Programs in Institutions of Higher Learning—Urban Mass Transportation Act of 1964, as amended (49 U.S.C. 1607c).

18. Use of grants made in connection with the High Speed Ground Transportation Act, as amended (49 U.S.C. 631–642).

APPENDIX B TO PART 21—ACTIVITIES TO WHICH THIS PART APPLIES WHEN A PRIMARY OBJECTIVE OF THE FEDERAL FINANCIAL ASSISTANCE IS TO PROVIDE EMPLOYMENT

1. Appalachia Regional Development Act of 1965 (40 U.S.C. App. 1 *et seq.*).

APPENDIX C TO PART 21—APPLICATION OF PART 21 TO CERTAIN FEDERAL FINANCIAL ASSISTANCE OF THE DEPARTMENT OF TRANSPORTATION

NONDISCRIMINATION ON FEDERALLY ASSISTED PROJECTS

(a) *Examples.* The following examples, without being exhaustive, illustrate the application of the nondiscrimination provisions of this part on projects receiving Federal financial assistance under the programs of certain Department of Transportation operating administrations:

(1) *Federal Aviation Administration.* (i) The airport sponsor or any of his lessees, concessionaires, or contractors may not differentiate between members of the public because of race, color, or national origin in furnishing, or admitting to, waiting rooms, passenger holding areas, aircraft tiedown areas, restaurant facilities, restrooms, or facilities operated under the compatible land use concept.

(ii) The airport sponsor and any of his lessees, concessionaires, or contractors must offer to all members of the public the same degree and type of service without regard to race, color, or national origin. This rule applies to fixed base operators, restaurants, snack bars, gift shops, ticket counters, baggage handlers, car rental agencies, limousines and taxis franchised by the airport sponsor, insurance underwriters, and other businesses catering to the public at the airport.

(iii) An aircraft operator may not be required to park his aircraft at a location that is less protected, or less accessible from the terminal facilities, than locations offered to others, because of his race, color, or national origin.

(iv) The pilot of an aircraft may not be required to help more extensively in fueling operations, and may not be offered less incidental service (such as windshield wiping), than other pilots, because of his race, color, or national origin.

(v) No pilot or crewmember eligible for access to a pilot's lounge or to unofficial communication facilities such as a UNICOM frequency may be restricted in that access because of his race, color, or national origin.

(vi) Access to facilities maintained at the airport by air carriers or commercial operators for holders of first-class transportation tickets or frequent users of the carrier's or operator's services may not be restricted on the basis of race, color, or national origin.

(vii) Passengers and crewmembers seeking ground transportation from the airport may not be assigned to different vehicles, or delayed or embarrassed in assignment to vehicles, by the airport sponsor or his lessees, concessionaires, or contractors, because of race, color, or national origin.

(viii) Where there are two or more sites having equal potential to serve the aeronautical needs of the area, the airport sponsor shall select the site least likely to adversely affect existing communities. Such site selection shall not be made on the basis of race, color, or national origin.

(ix) Employment at obligated airports, including employment by tenants and concessionaires shall be available to all regardless of race, creed, color, sex, or national origin. The sponsor shall coordinate his airport plan with his local transit authority and the Urban Mass Transportation Administration to assure public transportation, convenient to the disadvantaged areas of nearby communities to enhance employment opportunities for the disadvantaged and minority population.

(x) The sponsor shall assure that the minority business community in his area is advised of the opportunities offered by airport concessions, and that bids are solicited from such qualified minority firms, and awards made without regard to race, color, or national origin.

(2) *Federal Highway Administration.* (i) The State, acting through its highway department, may not discriminate in its selection and retention of contractors, including without limitation, those whose services are retained for, or incidental to, construction, planning, research, highway safety, engineering, property management, and fee contracts and other commitments with person for services and expenses incidental to the acquisition of right-of-way.

(ii) The State may not discriminate against eligible persons in making relocation payments and in providing relocation advisory assistance where relocation is necessitated by highway right-of-way acquisitions.

(iii) Federal-aid contractors may not discriminate in their selection and retention of first-tier subcontractors, and first-tier subcontractors may not discriminate in their selection and retention of second-tier subcontractors, who participate in Federal-aid highway construction, acquisition of right-of-way and related projects, including those who supply materials and lease equipment.

(iv) The State may not discriminate against the traveling public and business users of the federally assisted highway in their access to and use of the facilities and services provided for public accommodations (such as eating, sleeping, rest, recreation, and vehicle servicing) constructed on, over or under the right-of-way of such highways.

(v) Neither the State, any other persons subject to this part, nor its contractors and subcontractors may discriminate in their employment practices in connection with highway construction projects or other projects assisted by the Federal Highway Administration.

(vi) The State shall not locate or design a highway in such a manner as to require, on the basis of race, color, or national origin, the relocation of any persons.

(vii) The State shall not locate, design, or construct a highway in such a manner as to deny reasonable access to, and use thereof, to any persons on the basis of race, color, or national origin.

(3) *Urban Mass Transportation Administration.* (i) Any person who is, or seeks to be, a patron of any public vehicle which is operated as a part of, or in conjunction with, a project shall be given the same access, seating, and other treatment with regard to the use of such vehicle as other persons without regard to their race, color, or national origin.

(ii) No person who is, or seeks to be, an employee of the project sponsor or lessees, concessionaires, contractors, licensees, or any organization furnishing public transportation service as a part of, or in conjunction with, the project shall be treated less favorably than any other employee or applicant with regard to hiring, dismissal, advancement, wages, or any other conditions and benefits of employment, on the basis of race, color, or national origin.

(iii) No person or group of persons shall be discriminated against with regard to the routing, scheduling, or quality of service of transportation service furnished as a part of the project on the basis of race, color, or national origin. Frequency of service, age and quality of vehicles assigned to routes, quality of stations serving different routes, and location of routes may not be determined on the basis of race, color, or national origin.

(iv) The location of projects requiring land acquisition and the displacement of persons from their residences and businesses may not be determined on the basis of race, color, or national origin.

(b) *Obligations of the airport operator*—(1) *Tenants, contractors, and concessionaires.* Each airport operator shall require each tenant, contractor, and concessionaire who provides any activity, service, or facility at the airport under lease, contract with, or franchise from the airport, to covenant in a form specified by the Administrator, Federal Aviation Administration, that he will comply with the nondiscrimination requirements of this part.

(2) *Notification of beneficiaries.* The airport operator shall: (i) Make a copy of this part available at his office for inspection during normal working hours by any person asking for it, and (ii) conspicuously display a sign, or signs, furnished by the FAA, in the main public area or areas of the airport, stating that discrimination based on race, color, or national origin is prohibited on the airport.

(3) *Reports.* Each airport owner subject to this part shall, within 15 days after he receives it, forward to the Area Manager of the FAA Area in which the airport is located a copy of each written complaint charging discrimination because of race, color, or national origin by any person subject to this part, together with a statement describing all actions taken to resolve the matter, and the results thereof. Each airport operator shall submit to the area manager of the FAA area in which the airport is located a report for the preceding year on the date and in a form prescribed by the Federal Aviation Administrator.

[35 FR 10080, June 18, 1970, as amended by Amdt. 21–1, 38 FR 5875, Mar. 5, 1973; Amdt. 21–3, 40 FR 14318, Mar. 31, 1975]

PART 23—PARTICIPATION OF DISADVANTAGED BUSINESS ENTERPRISE IN AIRPORT CONCESSIONS

Subpart A—General

Sec.

23.1 What are the objectives of this part?
23.3 What do the terms used in this part mean?
23.5 To whom does this part apply?
23.7 How long do the provisions of this part remain in effect?
23.9 What are the nondiscrimination and assurance requirements of this part for recipients?
23.11 What compliance and enforcement provisions are used under this part?

23.13 How does the Department issue guidance, interpretations, exemptions, and waivers pertaining to this part?

Subpart B—ACDBE programs

23.21 Who must submit an ACDBE program to FAA, and when?
23.23 What administrative provisions must be in a recipient's ACDBE program?
23.25 What measures must recipients include in their ACDBE programs to ensure nondiscriminatory participation of ACDBEs in concessions?
23.27 What information does a recipient have to retain and report about implementation of its ACDBE program?
23.29 What monitoring and compliance procedures must recipients follow?

Subpart C—Certification of ACDBEs

23.31 What certification standards and procedures do recipients use to certify ACDBEs?
23.33 What size standards do recipients use to determine the eligibility of ACDBEs?
23.35 What is the personal net worth standard for disadvantaged owners of ACDBEs?
23.37 Are firms certified under 49 CFR part 26 eligible to participate as ACDBEs?
23.39 What other certification requirements apply in the case of ACDBEs?

Subpart D—Goals, Good Faith Efforts, and Counting

23.41 What is the basic overall goal requirement for recipients?
23.43 What are the consultation requirements in the development of recipients' overall goals?
23.45 What are the requirements for submitting overall goal information to the FAA?
23.47 What is the base for a recipient's goals for concessions other than car rentals?
23.49 What is the base for a recipient's goals for car rentals?
23.51 How are a recipient's overall goals expressed and calculated?
23.53 How do car rental companies count ACDBE participation toward their goals?
23.55 How do recipients count ACDBE participation toward goals for items other than car rentals?
23.57 What happens if a recipient falls short of meeting its overall goals?
23.59 What is the role of the statutory 10 percent goal in the ACDBE program?
23.61 Can recipients use quotas or set-asides as part of their their ACDBE programs?

Subpart E—Other Provisions

23.71 Does a recipient have to change existing concession agreements?
23.73 What requirements apply to privately-owned or leased terminal buildings?
23.75 Can recipients enter into long-term, exclusive agreements with concessionaires?
23.77 Does this part preempt local requirements?
23.79 Does this part permit recipients to use local geographic preferences?

APPENDIX A TO PART 23—UNIFORM REPORT OF ACDBE PARTICIPATION

AUTHORITY: 49 U.S.C. 47107; 42 U.S.C. 2000d; 49 U.S.C. 322; Executive Order 12138.

SOURCE: 70 FR 14508, Mar. 22, 2005, unless otherwise noted.

Subpart A—General

§ 23.1 What are the objectives of this part?

This part seeks to achieve several objectives:

(a) To ensure nondiscrimination in the award and administration of opportunities for concessions by airports receiving DOT financial assistance;

(b) To create a level playing field on which ACDBEs can compete fairly for opportunities for concessions;

(c) To ensure that the Department's ACDBE program is narrowly tailored in accordance with applicable law;

(d) To ensure that only firms that fully meet this part's eligibility standards are permitted to participate as ACDBEs;

(e) To help remove barriers to the participation of ACDBEs in opportunities for concessions at airports receiving DOT financial assistance; and

(f) To provide appropriate flexibility to airports receiving DOT financial assistance in establishing and providing opportunities for ACDBEs.

§ 23.3 What do the terms used in this part mean?

Administrator means the Administrator of the Federal Aviation Administration (FAA).

Affiliation has the same meaning the term has in the Small Business Administration (SBA) regulations, 13 CFR part 121, except that the provisions of SBA regulations concerning affiliation in the context of joint ventures (13 CFR §121.103(f)) do not apply to this part.

(1) Except as otherwise provided in 13 CFR part 121, concerns are affiliates of

each other when, either directly or indirectly:

(i) One concern controls or has the power to control the other; or

(ii) A third party or parties controls or has the power to control both; or

(iii) An identity of interest between or among parties exists such that affiliation may be found.

(2) In determining whether affiliation exists, it is necessary to consider all appropriate factors, including common ownership, common management, and contractual relationships. Affiliates must be considered together in determining whether a concern meets small business size criteria and the statutory cap on the participation of firms in the ACDBE program.

Airport Concession Disadvantaged Business Enterprise (ACDBE) means a concession that is a for-profit small business concern—

(1) That is at least 51 percent owned by one or more individuals who are both socially and economically disadvantaged or, in the case of a corporation, in which 51 percent of the stock is owned by one or more such individuals; and

(2) Whose management and daily business operations are controlled by one or more of the socially and economically disadvantaged individuals who own it.

Alaska Native Corporation (ANC) means any Regional Corporation, Village Corporation, Urban Corporation, or Group Corporation organized under the laws of the State of Alaska in accordance with the Alaska Native Claims Settlement Act (43 U.S.C. 1601 *et seq.*)

Car dealership means an establishment primarily engaged in the retail sale of new and/or used automobiles. Car dealerships frequently maintain repair departments and carry stocks of replacement parts, tires, batteries, and automotive accessories. Such establishments also frequently sell pickup trucks and vans at retail. In the standard industrial classification system, car dealerships are categorized in NAICS code 441110.

Concession means one or more of the types of for-profit businesses listed in paragraph (1) or (2) of this definition:

(1) A business, located on an airport subject to this part, that is engaged in the sale of consumer goods or services to the public under an agreement with the recipient, another concessionaire, or the owner or lessee of a terminal, if other than the recipient.

(2) A business conducting one or more of the following covered activities, even if it does not maintain an office, store, or other business location on an airport subject to this part, as long as the activities take place on the airport: Management contracts and subcontracts, a web-based or other electronic business in a terminal or which passengers can access at the terminal, an advertising business that provides advertising displays or messages to the public on the airport, or a business that provides goods and services to concessionaires.

Example to paragraph (2)*:* A supplier of goods or a management contractor maintains its office or primary place of business off the airport. However the supplier provides goods to a retail establishment in the airport; or the management contractor operates the parking facility on the airport. These businesses are considered concessions for purposes of this part.

(3) For purposes of this subpart, a business is not considered to be ''located on the airport'' solely because it picks up and/or delivers customers under a permit, license, or other agreement. For example, providers of taxi, limousine, car rental, or hotel services are not considered to be located on the airport just because they send shuttles onto airport grounds to pick up passengers or drop them off. A business is considered to be ''located on the airport,'' however, if it has an on-airport facility. Such facilities include in the case of a taxi operator, a dispatcher; in the case of a limousine, a booth selling tickets to the public; in the case of a car rental company, a counter at which its services are sold to the public or a ready return facility; and in the case of a hotel operator, a hotel located anywhere on airport property.

(4) Any business meeting the definition of concession is covered by this subpart, regardless of the name given to the agreement with the recipient, concessionaire, or airport terminal owner or lessee. A concession may be

operated under various types of agreements, including but not limited to the following:

(i) Leases.

(ii) Subleases.

(iii) Permits.

(iv) Contracts or subcontracts.

(v) Other instruments or arrangements.

(5) The conduct of an aeronautical activity is not considered a concession for purposes of this subpart. Aeronautical activities include scheduled and non-scheduled air carriers, air taxis, air charters, and air couriers, in their normal passenger or freight carrying capacities; fixed base operators; flight schools; recreational service providers (*e.g.*, sky-diving, parachute-jumping, flying guides); and air tour services.

(6) Other examples of entities that do not meet the definition of a concession include flight kitchens and in-flight caterers servicing air carriers, government agencies, industrial plants, farm leases, individuals leasing hangar space, custodial and security contracts, telephone and electric service to the airport facility, holding companies, and skycap services under contract with an air carrier or airport.

Concessionaire means a firm that owns and controls a concession or a portion of a concession.

Department (DOT) means the U.S. Department of Transportation, including the Office of the Secretary and the Federal Aviation Administration (FAA).

Direct ownership arrangement means a joint venture, partnership, sublease, licensee, franchise, or other arrangement in which a firm owns and controls a concession.

Good faith efforts means efforts to achieve an ACDBE goal or other requirement of this part that, by their scope, intensity, and appropriateness to the objective, can reasonably be expected to meet the program requirement.

Immediate family member means father, mother, husband, wife, son, daughter, brother, sister, grandmother, grandfather, grandson, granddaughter, mother-in-law, father-in-law, brother-in-law, sister-in-law, or registered domestic partner.

Indian tribe means any Indian tribe, band, nation, or other organized group or community of Indians, including any ANC, which is recognized as eligible for the special programs and services provided by the United States to Indians because of their status as Indians, or is recognized as such by the State in which the tribe, band, nation, group, or community resides. See definition of ''tribally-owned concern'' in this section.

Joint venture means an association of an ACDBE firm and one or more other firms to carry out a single, for-profit business enterprise, for which the parties combine their property, capital, efforts, skills and knowledge, and in which the ACDBE is responsible for a distinct, clearly defined portion of the work of the contract and whose shares in the capital contribution, control, management, risks, and profits of the joint venture are commensurate with its ownership interest. Joint venture entities are not certified as ACDBEs.

Large hub primary airport means a commercial service airport that has a number of passenger boardings equal to at least one percent of all passenger boardings in the United States.

Management contract or subcontract means an agreement with a recipient or another management contractor under which a firm directs or operates one or more business activities, the assets of which are owned, leased, or otherwise controlled by the recipient. The managing agent generally receives, as compensation, a flat fee or a percentage of the gross receipts or profit from the business activity. For purposes of this subpart, the business activity operated or directed by the managing agent must be other than an aeronautical activity, be located at an airport subject to this subpart, and be engaged in the sale of consumer goods or provision of services to the public.

Material amendment means a significant change to the basic rights or obligations of the parties to a concession agreement. Examples of material amendments include an extension to the term not provided for in the original agreement or a substantial increase in the scope of the concession privilege. Examples of nonmaterial amendments include a change in the name of

the concessionaire or a change to the payment due dates.

Medium hub primary airport means a commercial service airport that has a number of passenger boardings equal to at least 0.25 percent of all passenger boardings in the United States but less than one percent of such passenger boardings.

Native Hawaiian means any individual whose ancestors were natives, prior to 1778, of the area that now comprises the State of Hawaii.

Native Hawaiian Organization means any community service organization serving Native Hawaiians in the State of Hawaii that is a not-for-profit organization chartered by the State of Hawaii, and is controlled by Native Hawaiians

Noncompliance means that a recipient has not correctly implemented the requirements of this part.

Nonhub primary airport means a commercial service airport that has more than 10,000 passenger boardings each year but less than 0.05 percent of all passenger boardings in the United States.

Part 26 means 49 CFR part 26, the Department of Transportation's disadvantaged business enterprise regulation for DOT-assisted contracts.

Personal net worth means the net value of the assets of an individual remaining after total liabilities are deducted. An individual's personal net worth does not include the following: The individual's ownership interest in an ACDBE firm or a firm that is applying for ACDBE certification; the individual's equity in his or her primary place of residence; and other assets that the individual can document are necessary to obtain financing or a franchise agreement for the initiation or expansion of his or her ACDBE firm (or have in fact been encumbered to support existing financing for the individual's ACDBE business), to a maximum of $3 million. An individual's personal net worth includes only his or her own share of assets held jointly or as community property with the individual's spouse.

Primary airport means a commercial service airport that the Secretary determines to have more than 10,000 passengers enplaned annually.

Primary industry classification means the North American Industrial Classification System (NAICS) code designation that best describes the primary business of a firm. The NAICS Manual is available through the National Technical Information Service (NTIS) of the U.S. Department of Commerce (Springfield, VA, 22261). NTIS also makes materials available through its Web site (*http://www.ntis.gov/naics*).

Primary recipient means a recipient to which DOT financial assistance is extended through the programs of the FAA and which passes some or all of it on to another recipient.

Principal place of business means the business location where the individuals who manage the firm's day-to-day operations spend most working hours and where top management's business records are kept. If the offices from which management is directed and where business records are kept are in different locations, the recipient will determine the principal place of business for ACDBE program purposes.

Race-conscious means a measure or program that is focused specifically on assisting only ACDBEs, including women-owned ACDBEs. For the purposes of this part, race-conscious measures include gender-conscious measures.

Race-neutral means a measure or program that is, or can be, used to assist all small businesses, without making distinctions or classifications on the basis of race or gender.

Secretary means the Secretary of Transportation or his/her designee.

Set-aside means a contracting practice restricting eligibility for the competitive award of a contract solely to ACDBE firms.

Small Business Administration or *SBA* means the United States Small Business Administration.

Small business concern means a for profit business that does not exceed the size standards of § 23.33 of this part.

Small hub airport means a publicly owned commercial service airport that has a number of passenger boardings equal to at least 0.05 percent of all passenger boardings in the United States but less than 0.25 percent of such passenger boardings.

Socially and economically disadvantaged individual means any individual who is a citizen (or lawfully admitted permanent resident) of the United States and who is—

(1) Any individual determined by a recipient to be a socially and economically disadvantaged individual on a case-by-case basis.

(2) Any individual in the following groups, members of which are rebuttably presumed to be socially and economically disadvantaged:

(i) ''Black Americans,'' which includes persons having origins in any of the Black racial groups of Africa;

(ii) ''Hispanic Americans,'' which includes persons of Mexican, Puerto Rican, Cuban, Dominican, Central or South American, or other Spanish or Portuguese culture or origin, regardless of race;

(iii) ''Native Americans,'' which includes persons who are American Indians, Eskimos, Aleuts, or Native Hawaiians;

(iv) ''Asian-Pacific Americans,'' which includes persons whose origins are from Japan, China, Taiwan, Korea, Burma (Myanmar), Vietnam, Laos, Cambodia (Kampuchea), Thailand, Malaysia, Indonesia, the Philippines, Brunei, Samoa, Guam, the U.S. Trust Territories of the Pacific Islands (Republic of Palau), the Commonwealth of the Northern Marianas Islands, Macao, Fiji, Tonga, Kirbati, Juvalu, Nauru, Federated States of Micronesia, or Hong Kong;

(v) ''Subcontinent Asian Americans,'' which includes persons whose origins are from India, Pakistan, Bangladesh, Bhutan, the Maldives Islands, Nepal or Sri Lanka;

(vi) Women;

(vii) Any additional groups whose members are designated as socially and economically disadvantaged by the SBA, at such time as the SBA designation becomes effective.

Recipient means any entity, public or private, to which DOT financial assistance is extended, whether directly or through another recipient, through the programs of the FAA.

Tribally-owned concern means any concern at least 51 percent owned by an Indian tribe as defined in this section.

You refers to a recipient, unless a statement in the text of this part or the context requires otherwise (*i.e.*, ''You must do XYZ'' means that recipients must do XYZ).

[70 FR 14508, Mar. 22, 2005, as amended at 72 FR 15616, Apr. 2, 2007]

§ 23.5 To whom does this part apply?

If you are a recipient that has received a grant for airport development at any time after January 1988 that was authorized under Title 49 of the United States Code, this part applies to you.

§ 23.7 How long do the provisions of this part remain in effect?

Unless extended by the Department, the provisions of this rule will terminate and become inoperative on April 21, 2010.

§ 23.9 What are the nondiscrimination and assurance requirements of this part for recipients?

(a) As a recipient, you must meet the non-discrimination requirements provided in part 26, § 26.7 with respect to the award and performance of any concession agreement, management contract or subcontract, purchase or lease agreement, or other agreement covered by this subpart.

(b) You must also take all necessary and reasonable steps to ensure nondiscrimination in the award and administration of contracts and agreements covered by this part.

(c) You must include the following assurances in all concession agreements and management contracts you execute with any firm after April 21, 2005:

(1) ''This agreement is subject to the requirements of the U.S. Department of Transportation's regulations, 49 CFR part 23. The concessionaire or contractor agrees that it will not discriminate against any business owner because of the owner's race, color, national origin, or sex in connection with the award or performance of any concession agreement, management contract, or subcontract, purchase or lease agreement, or other agreement covered by 49 CFR part 23.

(2) ''The concessionaire or contractor agrees to include the above statements

in any subsequent concession agreement or contract covered by 49 CFR part 23, that it enters and cause those businesses to similarly include the statements in further agreements.''

§ 23.11 What compliance and enforcement provisions are used under this part?

The compliance and enforcement provisions of part 26 (§§ 26.101 and 26.105 through 26.109) apply to this part in the same way that they apply to FAA recipients and programs under part 26.

[70 FR 14508, Mar. 22, 2005, as amended at 72 FR 15616, Apr. 2, 2007]

§ 23.13 How does the Department issue guidance, interpretations, exemptions, and waivers pertaining to this part?

(a) Only guidance and interpretations (including interpretations set forth in certification appeal decisions) consistent with this part 23 and issued after April 21, 2005, express the official positions and views of the Department of Transportation or the Federal Aviation Administration.

(b) The Secretary of Transportation, Office of the Secretary of Transportation, and the FAA may issue written interpretations of or written guidance concerning this part. Written interpretations and guidance are valid, and express the official positions and views of the Department of Transportation or the FAA, only if they are issued over the signature of the Secretary of Transportation or if they contain the following statement:

> The General Counsel of the Department of Transportation has reviewed this document and approved it as consistent with the language and intent of 49 CFR part 23.

(c) You may apply for an exemption from any provision of this part. To apply, you must request the exemption in writing from the Office of the Secretary of Transportation or the FAA. The Secretary will grant the request only if it documents special or exceptional circumstances, not likely to be generally applicable, and not contemplated in connection with the rulemaking that established this part, that make your compliance with a specific provision of this part impractical. You must agree to take any steps that the Department specifies to comply with the intent of the provision from which an exemption is granted. The Secretary will issue a written response to all exemption requests.

(d) You can apply for a waiver of any provision of subpart B or D of this part including, but not limited to, any provisions regarding administrative requirements, overall goals, contract goals or good faith efforts. Program waivers are for the purpose of authorizing you to operate an ACDBE program that achieves the objectives of this part by means that may differ from one or more of the requirements of subpart B or D of this part. To receive a program waiver, you must follow these procedures:

(1) You must apply through the FAA. The application must include a specific program proposal and address how you will meet the criteria of paragraph (d)(2) of this section. Before submitting your application, you must have had public participation in developing your proposal, including consultation with the ACDBE community and at least one public hearing. Your application must include a summary of the public participation process and the information gathered through it.

(2) Your application must show that—

(i) There is a reasonable basis to conclude that you could achieve a level of ACDBE participation consistent with the objectives of this part using different or innovative means other than those that are provided in subpart B or D of this part;

(ii) Conditions at your airport are appropriate for implementing the proposal;

(iii) Your proposal would prevent discrimination against any individual or group in access to concession opportunities or other benefits of the program; and

(iv) Your proposal is consistent with applicable law and FAA program requirements.

(3) The FAA Administrator has the authority to approve your application. If the Administrator grants your application, you may administer your ACDBE program as provided in your proposal, subject to the following conditions:

(i) ACDBE eligibility is determined as provided in subpart C of this part, and ACDBE participation is counted as provided in §§ 23.53 through 23.55.

(ii) Your level of ACDBE participation continues to be consistent with the objectives of this part;

(iii) There is a reasonable limitation on the duration of the your modified program; and

(iv) Any other conditions the Administrator makes on the grant of the waiver.

(4) The Administrator may end a program waiver at any time and require you to comply with this part's provisions. The Administrator may also extend the waiver, if he or she determines that all requirements of this section continue to be met. Any such extension shall be for no longer than period originally set for the duration of the program waiver.

[70 FR 14508, Mar. 22, 2005, as amended at 72 FR 15616, Apr. 2, 2007]

Subpart B—ACDBE Programs

§ 23.21 Who must submit an ACDBE program to FAA, and when?

(a) Except as provided in paragraph (e) of this section, if you are a primary airport that has or was required to have a concessions DBE program prior to April 21, 2005, you must submit a revisesd ACDBE program meeting the requirements of this part to the appropriate FAA regional office for approval.

(1) You must submit this revised program on the same schedule provided for your first submission of overall goals in § 23.45(a) of this part.

(2) Timely submission and FAA approval of your revised ACDBE program is a condition of eligibility for FAA financial assistance.

(3) Until your new ACDBE program is submitted and approved, you must continue to implement your concessions DBE program that was in effect before the effective date of this amendment to part 23, except with respect to any provision that is contrary to this part.

(b) If you are a primary airport that does not now have a DBE concessions program, and you apply for a grant of FAA funds for airport planning and development under 49 U.S.C. 47107 *et seq.*, you must submit an ACDBE program to the FAA at the time of your application. Timely submission and FAA approval of your ACDBE program are conditions of eligibility for FAA financial assistance.

(c) If you are the owner of more than one airport that is required to have an ACDBE program, you may implement one plan for all your locations. If you do so, you must establish a separate ACDBE goal for each location.

(d) If you make any significant changes to your ACDBE program at any time, you must provide the amended program to the FAA for approval before implementing the changes.

(e) If you are a non-primary airport, non-commercial service airport, a general aviation airport, reliever airport, or any other airport that does not have scheduled commercial service, you are not required to have an ACDBE program. However, you must take appropriate outreach steps to encourage available ACDBEs to participate as concessionaires whenever there is a concession opportunity.

§ 23.23 What administrative provisions must be in a recipient's ACDBE program?

(a) If, as a recipient that must have an ACDBE program, the program must include provisions for a policy statement, liaison officer, and directory, as provided in part 26, §§ 26.23, 26.25, and 26.31, as well as certification of ACDBEs as provided by Subpart C of this part. You must include a statement in your program committing you to operating your ACDBE program in a nondiscriminatory manner.

(b) You may combine your provisions for implementing these requirements under this part and part 26 (*e.g.*, a single policy statement can cover both Federally-assisted airport contracts and concessions; the same individual can act as the liaison officer for both part 23 and part 26 matters).

§ 23.25 What measures must recipients include in their ACDBE programs to ensure nondiscriminatory participation of ACDBEs in concessions?

(a) You must include in your ACDBE program a narrative description of the types of measures you intend to make

to ensure nondiscriminatory participation of ACDBEs in concession and other covered activities.

(b) Your ACDBE program must provide for setting goals consistent with the requirements of Subpart D of this part.

(c) Your ACDBE program must provide for seeking ACDBE participation in all types of concession activities, rather than concentrating participation in one category or a few categories to the exclusion of others.

(d) Your ACDBE program must include race-neutral measures that you will take. You must maximize the use of race-neutral measures, obtaining as much as possible of the ACDBE participation needed to meet overall goals through such measures. These are responsibilities that you directly undertake as a recipient, in addition to the efforts that concessionaires make, to obtain ACDBE participation. The following are examples of race-neutral measures you can implement:

(1) Locating and identifying ACDBEs and other small businesses who may be interested in participating as concessionaires under this part;

(2) Notifying ACDBEs of concession opportunities and encouraging them to compete, when appropriate;

(3) When practical, structuring concession activities so as to encourage and facilitate the participation of ACDBEs

(4) Providing technical assistance to ACDBEs in overcoming limitations, such as inability to obtain bonding or financing;

(5) Ensuring that competitors for concession opportunities are informed during pre-solicitation meetings about how the recipient's ACDBE program will affect the procurement process;

(6) Providing information concerning the availability of ACDBE firms to competitors to assist them in obtaining ACDBE participation; and

(7) Establishing a business development program (*see* part 26, § 26.35); technical assistance program; or taking other steps to foster ACDBE participation in concessions.

(e) Your ACDBE program must also provide for the use of race-conscious measures when race-neutral measures, standing alone, are not projected to be sufficient to meet an overall goal. The following are examples of race-conscious measures you can implement:

(1) Establishing concession-specific goals for particular concession opportunities.

(i) If the objective of the concession-specific goal is to obtain ACDBE participation through a direct ownership arrangement with a ACDBE, calculate the goal as a percentage of the total estimated annual gross receipts from the concession.

(ii) If the goal applies to purchases and/or leases of goods and services, calculate the goal by dividing the estimated dollar value of such purchases and/or leases from ACDBEs by the total estimated dollar value of all purchases to be made by the concessionaire.

(iii) To be eligible to be awarded the concession, competitors must make good faith efforts to meet this goal. A competitor may do so either by obtaining enough ACDBE participation to meet the goal or by documenting that it made sufficient good faith efforts to do so.

(iv) The administrative procedures applicable to contract goals in part 26, § 26.51–53, apply with respect to concession-specific goals.

(2) Negotiation with a potential concessionaire to include ACDBE participation, through direct ownership arrangements or measures, in the operation of the concession.

(3) With the prior approval of FAA, other methods that take a competitor's ability to provide ACDBE participation into account in awarding a concession.

(f) Your ACDBE program must require businesses subject to ACDBE goals at the airport (except car rental companies) to make good faith efforts to explore all available options to meet goals, to the maximum extent practicable, through direct ownership arrangements with DBEs.

(g) As provided in § 23.61 of this part, you must not use set-asides and quotas as means of obtaining ACDBE participation.

§ 23.27 What information does a recipient have to retain and report about implementation of its ACDBE program?

(a) As a recipient, you must retain sufficient basic information about your program implementation, your certification of ACDBEs, and the award and performance of agreements and contracts to enable the FAA to determine your compliance with this part. You must retain this data for a minimum of three years following the end of the concession agreement or other covered contract.

(b) Beginning March 1, 2006, you must submit an annual report on ACDBE participation using the form found in appendix A to this part. You must submit the report to the appropriate FAA Regional Civil Rights Office.

§ 23.29 What monitoring and compliance procedures must recipients follow?

As a recipient, you must implement appropriate mechanisms to ensure compliance with the requirements of this part by all participants in the program. You must include in your concession program the specific provisions to be inserted into concession agreements and management contracts, the enforcement mechanisms, and other means you use to ensure compliance. These provisions must include a monitoring and enforcement mechanism to verify that the work committed to ACDBEs is actually performed by the ACDBEs. Your program must describe in detail the level of effort and resources devoted to monitoring and enforcement.

Subpart C—Certification and Eligibility of ACDBEs

§ 23.31 What certification standards and procedures do recipients use to certify ACDBEs?

(a) As a recipient, you must use, except as provided in this subpart, the procedures and standards of part 26, §§ 26.61–91 for certification of ACDBEs to participate in your concessions program. Your ACDBE program must incorporate the use of these standards and procedures and must provide that certification decisions for ACDBEs will be made by the Unified Certification Program (UCP) in your state (*see* part 26, § 26.81).

(b) The UCP's directory of eligible DBEs must specify whether a firm is certified as a DBE for purposes of part 26, an ACDBE for purposes of part 23, or both.

(c) As an airport or UCP, you must review the eligibility of currently certified ACDBE firms to make sure that they meet the eligibility standards of this part.

(1) You must complete these reviews as soon as possible, but in no case later than April 21, 2006 or three years from the anniversary date of each firm's most recent certification, whichever is later.

(2) You must direct all currently certified ACDBEs to submit to you by April 21, 2006, a personal net worth statement, a certification of disadvantage, and an affidavit of no change.

§ 23.33 What size standards do recipients use to determine the eligibility of ACDBEs?

(a) As a recipient, you must, except as provided in paragraph (b) of this section, treat a firm as a small business eligible to be certified as an ACDBE if its gross receipts, averaged over the firm's previous three fiscal years, do not exceed $47.78 million.

(b) The following types of businesses have size standards that differ from the standard set forth in paragraph (a) of this section:

(1) Banks and financial institutions: $750 million in assets;

(2) Car rental companies: $63.71 million average annual gross receipts over the firm's three previous fiscal years;

(3) Companies providing pay telephones: 1,500 employees;

(4) Automobile dealers: 200 employees.

(c) The Department adjusts the numbers in paragraphs (a) and (b)(2) of this section using the Department of Commerce price deflators for purchases by state and local governments as the basis for this adjustment. These adjustments are made every two years from May 2, 2007. The Department publishes a final rule informing the public of each adjustment.

[72 FR 15617, Apr. 2, 2007]

§ 23.35 What is the personal net worth standard for disadvantaged owners of ACDBEs?

The personal net worth standard used in determining eligibility for purposes of this part is $750,000. Any individual who has a personal net worth exceeding this amount is not a socially and economically disadvantaged individual for purposes of this part, even if the individual is a member of a group otherwise presumed to be disadvantaged.

§ 23.37 Are firms certified under 49 CFR part 26 eligible to participate as ACDBEs?

(a) You must presume that a firm that is certified as a DBE under part 26 is eligible to participate as an ACDBE. By meeting the size, disadvantage (including personal net worth), ownership and control standards of part 26, the firm will have also met the eligibility standards for part 23.

(b) However, before certifying such a firm, you must ensure that the disadvantaged owners of a DBE certified under part 26 are able to control the firm with respect to its activity in the concessions program. In addition, you are not required to certify a part 26 DBE as a part 23 ACDBE if the firm does not do work relevant to the airport's concessions program.

§ 23.39 What other certification requirements apply in the case of ACDBEs?

(a) The provisions of part 26, §§ 26.83 (c)(2) through (c)(6) do not apply to certifications for purposes of this part. Instead, in determining whether a firm is an eligible ACDBE, you must take the following steps:

(1) Obtain the resumes or work histories of the principal owners of the firm and personally interview these individuals;

(2) Analyze the ownership of stock of the firm, if it is a corporation;

(3) Analyze the bonding and financial capacity of the firm;

(4) Determine the work history of the firm, including any concession contracts or other contracts it may have received;

(5) Obtain or compile a list of the licenses of the firm and its key personnel to perform the concession contracts or other contracts it wishes to receive;

(6) Obtain a statement from the firm of the type(s) of concession(s) it prefers to operate or the type(s) of other contract(s) it prefers to perform.

(b) In reviewing the affidavit required by part 26, § 26.83(j), you must ensure that the ACDBE firm meets the applicable size standard in § 23.33.

(c) For purposes of this part, the term prime contractor in part 26, § 26.87(i) includes a firm holding a prime contract with an airport concessionaire to provide goods or services to the concessionaire or a firm holding a prime concession agreement with a recipient.

(d) With respect to firms owned by Alaska Native Corporations (ANCs), the provisions of part 26, § 26.73(i) do not apply under this part. The eligibility of ANC-owned firms for purposes of this part is governed by § 26.73(h).

(e) When you remove a concessionaire's eligibility after the concessionaire has entered a concession agreement, because the firm exceeded the small business size standard or because an owner has exceeded the personal net worth standard, and the firm in all other respects remains an eligible DBE, you may continue to count the concessionaire's participation toward DBE goals during the remainder of the current concession agreement. However, you must not count the concessionaire's participation toward DBE goals beyond the termination date for the concession agreement in effect at the time of the decertification (*e.g.*, in a case where the agreement is renewed or extended, or an option for continued participation beyond the current term of the agreement is exercised).

(f) When UCPs are established in a state (see part 26, § 26.81), the UCP, rather than individual recipients, certifies firms for the ACDBE concession program.

(g) You must use the Uniform Application Form found in appendix F to part 26. However, you must instruct applicants to take the following additional steps:

(1) In the space available in section 2(B)(7) of the form, the applicant must state that it is applying for certification as an ACDBE.

(2) With respect to section 4(C) of the form, the applicant must provide information on an attached page concerning the address/location, ownership/lease status, current value of property or lease, and fees/lease payments paid to the airport.

(3) The applicant need not complete section 4(I) and (J). However, the applicant must provide information on an attached page concerning any other airport concession businesses the applicant firm or any affiliate owns and/or operates, including name, location, type of concession, and start date of concession.

(h) Car rental companies and private terminal owners or lessees are not authorized to certify firms as ACDBEs. As a car rental company or private terminal owner or lessee, you must obtain ACDBE participation from firms which a recipient or UCPs have certified as ACDBEs.

(i) You must use the certification standards of this part to determine the ACDBE eligibility of firms that provide goods and services to concessionaires.

Subpart D—Goals, Good Faith Efforts, and Counting

§ 23.41 What is the basic overall goal requirement for recipients?

(a) If you are a recipient who must implement an ACDBE program, you must, except as provided in paragraph (b) of this section, establish two separate overall ACDBE goals. The first is for car rentals; the second is for concessions other than car rentals.

(b) If your annual car rental concession revenues, averaged over the three-years preceding the date on which you are required to submit overall goals, do not exceed $200,000, you are not required to submit a car rental overall goal. If your annual revenues for concessions other than car rentals, averaged over the three years preceding the date on which you are required to submit overall goals, do not exceed $200,000, you are not required to submit a non-car rental overall goal.

(c) Each overall goal must cover a three-year period. You must review your goals annually to make sure they continue to fit your circumstances appropriately. You must report to the FAA any significant adjustments that you make to your goal in the time before your next scheduled submission.

(d) Your goals established under this part must provide for participation by all certified ACDBEs and may not be subdivided into group-specific goals.

(e) If you fail to establish and implement goals as provided in this section, you are not in compliance with this part. If you establish and implement goals in a way different from that provided in this part, you are not in compliance with this part. If you fail to comply with this requirement, you are not eligible to receive FAA financial assistance.

§ 23.43 What are the consultation requirements in the development of recipients' overall goals?

(a) As a recipient, you must consult with stakeholders before submitting your overall goals to FAA.

(b) Stakeholders with whom you must consult include, but are not limited to, minority and women's business groups, community organizations, trade associations representing concessionaires currently located at the airport, as well as existing concessionaires themselves, and other officials or organizations which could be expected to have information concerning the availability of disadvantaged businesses, the effects of discrimination on opportunities for ACDBEs, and the recipient's efforts to increase participation of ACDBEs.

§ 23.45 What are the requirements for submitting overall goal information to the FAA?

(a) You must submit your overall goals to the appropriate FAA Regional Civil Rights Office for approval. Your first set of overall goals meeting the requirements of this subpart are due on the following schedule:

(1) If you are a large or medium hub primary airport on April 21, 2005, by January 1, 2006. You must make your next submissions by October 1, 2008.

(2) If you are a small hub primary airport on April 21, 2005, by October 1, 2006.

(3) If you are a nonhub primary airport on April 21, 2005, by October 1, 2007.

(b) You must then submit new goals every three years after the date that applies to you.

(c) Timely submission and FAA approval of your overall goals is a condition of eligibility for FAA financial assistance.

(d) In the time before you make your first submission under paragraph (a) of this section, you must continue to use the overall goals that have been approved by the FAA before the effective date of this part.

(e) Your overall goal submission must include a description of the method used to calculate your goals and the data you relied on. You must ''show your work'' to enable the FAA to understand how you concluded your goals were appropriate. This means that you must provide to the FAA the data, calculations, assumptions, and reasoning used in establishing your goals.

(f) Your submission must include your projection of the portions of your overall goals you propose to meet through use of race-neutral and race-conscious means, respectively, and the basis for making this projection (*see* § 23.51(d)(5))

(g) FAA may approve or disapprove the way you calculated your goal, including your race-neutral/race-conscious ''split,'' as part of its review of your plan or goal submission. Except as provided in paragraph (h) of this section, the FAA does not approve or disapprove the goal itself (*i.e.*, the number).

(h) If the FAA determines that your goals have not been correctly calculated or the justification is inadequate, the FAA may, after consulting with you, adjust your overall goal or race-conscious/race-neutral ''split.'' The adjusted goal represents the FAA's determination of an appropriate overall goal for ACDBE participation in the recipient's concession program, based on relevant data and analysis. The adjusted goal is binding on you.

(i) If a new concession opportunity the estimated average annual gross revenues of which are anticipated to be $200,000 or greater arises at a time that falls between normal submission dates for overall goals, you must submit an appropriate adjustment to your overall goal to the FAA for approval at least six months before executing the concession agreement for the new concession opportunity.

§ 23.47 What is the base for a recipient's goal for concessions other than car rentals?

(a) As a recipient, the base for your goal includes the total gross receipts of concessions, except as otherwise provided in this section.

(b) This base does not include the gross receipts of car rental operations.

(c) The dollar amount of a management contract or subcontract with a non-ACDBE and the gross receipts of business activities to which a management or subcontract with a non-ACDBE pertains are not added to this base.

(d) This base does not include any portion of a firm's estimated gross receipts that will not be generated from a concession.

Example to paragraph (d)*:* A firm operates a restaurant in the airport terminal which serves the traveling public and under the same lease agreement, provides in-flight catering service to air carriers. The projected gross receipts from the restaurant are included in the overall goal calculation, while the gross receipts to be earned by the in-flight catering services are not.

§ 23.49 What is the base for a recipient's goal for car rentals?

Except in the case where you use the alternative goal approach of § 23.51(c)(5)(ii), the base for your goal is the total gross receipts of car rental operations at your airport. You do not include gross receipts of other concessions in this base.

§ 23.51 How are a recipient's overall goals expressed and calculated?

(a) Your objective in setting a goal is to estimate the percentage of the base calculated under §§ 23.47–23.49 that would be performed by ACDBEs in the absence of discrimination and its effects.

(1) This percentage is the estimated ACDBE participation that would occur if there were a ''level playing field'' for firms to work as concessionaires for your airport.

(2) In conducting this goal setting process, you are determining the extent, if any, to which the firms in your

market area have suffered discrimination or its effects in connection with concession opportunities or related business opportunities.

(3) You must complete the goal-setting process separately for each of the two overall goals identified in § 23.41 of this part.

(b)(1) Each overall concessions goal must be based on demonstrable evidence of the availability of ready, willing and able ACDBEs relative to all businesses ready, willing and able to participate in your ACDBE program (hereafter, the ''relative availability of ACDBEs'').

(2) You cannot simply rely on the 10 percent national aspirational goal, your previous overall goal, or past ACDBE participation rates in your program without reference to the relative availability of ACDBEs in your market.

(3) Your market area is defined by the geographical area in which the substantial majority of firms which seek to do concessions business with the airport are located and the geographical area in which the firms which receive the substantial majority of concessions-related revenues are located. Your market area may be different for different types of concessions.

(c) *Step 1.* You must begin your goal setting process by determining a base figure for the relative availability of ACDBEs. The following are examples of approaches that you may take toward determining a base figure. These examples are provided as a starting point for your goal setting process. Any percentage figure derived from one of these examples should be considered a basis from which you begin when examining the evidence available to you. These examples are not intended as an exhaustive list. Other methods or combinations of methods to determine a base figure may be used, subject to approval by the FAA.

(1) *Use DBE Directories and Census Bureau Data.* Determine the number of ready, willing and able ACDBEs in your market area from your ACDBE directory. Using the Census Bureau's County Business Pattern (CBP) data base, determine the number of all ready, willing and able businesses available in your market area that perform work in the same NAICS codes. (Information about the CBP data base may be obtained from the Census Bureau at their Web site, *http://www.census.gov/epcd/cbp/view/cbpview.html*.) Divide the number of ACDBEs by the number of all businesses to derive a base figure for the relative availability of ACDBEs in your market area.

(2) *Use an Active Participants List.* Determine the number of ACDBEs that have participated or attempted to participate in your airport concessions program in previous years. Determine the number of all businesses that have participated or attempted to participate in your airport concession program in previous years. Divide the number of ACDBEs who have participated or attempted to participate by the number for all businesses to derive a base figure for the relative availability of ACDBEs in your market area.

(3) *Use data from a disparity study.* Use a percentage figure derived from data in a valid, applicable disparity study.

(4) *Use the goal of another recipient.* If another airport or other DOT recipient in the same, or substantially similar, market has set an overall goal in compliance with this rule, you may use that goal as a base figure for your goal.

(5) *Alternative methods.* (i) You may use other methods to determine a base figure for your overall goal. Any methodology you choose must be based on demonstrable evidence of local market conditions and be designed to ultimately attain a goal that is rationally related to the relative availability of ACDBEs in your market area.

(ii) In the case of a car rental goal, where it appears that all or most of the goal is likely to be met through the purchases by car rental companies of vehicles or other goods or services from ACDBEs, one permissible alternative is to structure the goal entirely in terms of purchases of goods and services. In this case, you would calculate your car rental overall goal by dividing the estimated dollar value of such purchases from ACDBEs by the total estimated dollar value of all purchases to be made by car rental companies.

(d) *Step 2.* Once you have calculated a base figure, you must examine all relevant evidence reasonably available in your jurisdiction to determine what adjustment, if any, is needed to the base figure in order to arrive at your overall goal.

(1) There are many types of evidence that must be considered when adjusting the base figure. These include, but are not limited to:

(i) The current capacity of ACDBEs to perform work in your concessions program, as measured by the volume of work ACDBEs have performed in recent years; and

(ii) Evidence from disparity studies conducted anywhere within your jurisdiction, to the extent it is not already accounted for in your base figure.

(2) If your base figure is the goal of another recipient, you must adjust it for differences in your market area and your concessions program.

(3) If available, you must consider evidence from related fields that affect the opportunities for ACDBEs to form, grow and compete. These include, but are not limited to:

(i) Statistical disparities in the ability of ACDBEs to get the financing, bonding and insurance required to participate in your program;

(ii) Data on employment, self-employment, education, training and union apprenticeship programs, to the extent you can relate it to the opportunities for ACDBEs to perform in your program.

(4) If you attempt to make an adjustment to your base figure to account for the continuing effects of past discrimination, or the effects of an ongoing ACDBE program, the adjustment must be based on demonstrable evidence that is logically and directly related to the effect for which the adjustment is sought.

(5) Among the information you submit with your overall goal (*see* 23.45(e)), you must include description of the methodology you used to establish the goal, including your base figure and the evidence with which it was calculated, as well as the adjustments you made to the base figure and the evidence relied on for the adjustments. You should also include a summary listing of the relevant available evidence in your jurisdiction and an explanation of how you used that evidence to adjust your base figure. You must also include your projection of the portions of the overall goal you expect to meet through race-neutral and race-conscious measures, respectively (*see* §§ 26.51(c)).

(e) You are not required to obtain prior FAA concurrence with your overall goal (*i.e.*, with the number itself). However, if the FAA's review suggests that your overall goal has not been correctly calculated, or that your method for calculating goals is inadequate, the FAA may, after consulting with you, adjust your overall goal or require that you do so. The adjusted overall goal is binding on you.

(f) If you need additional time to collect data or take other steps to develop an approach to setting overall goals, you may request the approval of the FAA Administrator for an interim goal and/or goal-setting mechanism. Such a mechanism must:

(1) Reflect the relative availability of ACDBEs in your local market area to the maximum extent feasible given the data available to you; and

(2) Avoid imposing undue burdens on non-ACDBEs.

§ 23.53 How do car rental companies count ACDBE participation toward their goals?

(a) As a car rental company, you may, in meeting the goal the airport has set for you, include purchases or leases of vehicles from any vendor that is a certified ACDBE.

(b) As a car rental company, if you choose to meet the goal the airport has set for you by including purchases or leases of vehicles from an ACDBE vendor, you must also submit to the recipient documentation of the good faith efforts you have made to obtain ACDBE participation from other ACDBE providers of goods and services.

(c) While this part does not require you to obtain ACDBE participation through direct ownership arrangements, you may count such participation toward the goal the airport has set for you.

(d) The following special rules apply to counting participation related to car rental operations:

(1) Count the entire amount of the cost charged by an ACDBE for repairing vehicles, provided that it is reasonable and not excessive as compared with fees customarily allowed for similar services.

(2) Count the entire amount of the fee or commission charged by a ACDBE to manage a car rental concession under an agreement with the concessionaire toward ACDBE goals, provided that it is reasonable and not excessive as compared with fees customarily allowed for similar services.

(3) Do not count any portion of a fee paid by a manufacturer to a car dealership for reimbursement of work performed under the manufacturer's warranty.

(e) For other goods and services, count participation toward ACDBE goals as provided in part 26, § 26.55 and § 23.55 of this part. In the event of any conflict between these two sections, § 23.55 controls.

(f) If you have a national or regional contract, count a pro-rated share of the amount of that contract toward the goals of each airport covered by the contract. Use the proportion of your applicable gross receipts as the basis for making this pro-rated assignment of ACDBE participation.

Example to paragraph (f)*:* Car Rental Company X signs a regional contract with an ACDBE car dealer to supply cars to all five airports in a state. The five airports each account for 20 percent of X's gross receipts in the state. Twenty percent of the value of the cars purchased through the ACDBE car dealer would count toward the goal of each airport.

§ 23.55 How do recipients count ACDBE participation toward goals for items other than car rentals?

(a) You count only ACDBE participation that results from a commercially useful function. For purposes of this part, the term commercially useful function has the same meaning as in part 26, § 26.55(c), except that the requirements of § 26.55(c)(3) do not apply to concessions.

(b) Count the total dollar value of gross receipts an ACDBE earns under a concession agreement and the total dollar value of a management contract or subcontract with an ACDBE toward the goal. However, if the ACDBE enters into a subconcession agreement or subcontract with a non-ACDBE, do not count any of the gross receipts earned by the non-ACDBE.

(c) When an ACDBE performs as a subconcessionaire or subcontractor for a non-ACDBE, count only the portion of the gross receipts earned by the ACDBE under its subagreement.

(d) When an ACDBE performs as a participant in a joint venture, count a portion of the gross receipts equal to the distinct, clearly defined portion of the work of the concession that the ACDBE performs with its own forces toward ACDBE goals.

(e) Count the entire amount of fees or commissions charged by an ACDBE firm for a *bona fide* service, provided that, as the recipient, you determine this amount to be reasonable and not excessive as compared with fees customarily allowed for similar services. Such services may include, but are not limited to, professional, technical, consultant, legal, security systems, advertising, building cleaning and maintenance, computer programming, or managerial.

(f) Count 100 percent of the cost of goods obtained from an ACDBE manufacturer. For purposes of this part, the term manufacturer has the same meaning as in part 26, § 26.55(e)(1)(ii).

(g) Count 100 percent of the cost of goods purchased or leased from a ACDBE regular dealer. For purposes of this part, the term ''regular dealer'' has the same meaning as in part 26, § 26.55(e)(2)(ii).

(h) Count credit toward ACDBE goals for goods purchased from an ACDBE which is neither a manufacturer nor a regular dealer as follows:

(1) Count the entire amount of fees or commissions charged for assistance in the procurement of the goods, provided that this amount is reasonable and not excessive as compared with fees customarily allowed for similar services. Do not count any portion of the cost of the goods themselves.

(2) Count the entire amount of fees or transportation charges for the delivery of goods required for a concession, provided that this amount is reasonable and not excessive as compared with fees customarily allowed for similar

services. Do not count any portion of the cost of goods themselves.

(i) If a firm has not been certified as an ACDBE in accordance with the standards in this part, do not count the firm's participation toward ACDBE goals.

(j) Do not count the work performed or gross receipts earned by a firm after its eligibility has been removed toward ACDBE goals. However, if an ACDBE firm certified on April 21, 2005 is decertified because one or more of its disadvantaged owners do not meet the personal net worth criterion or the firm exceeds business size standards of this part during the performance of a contract or other agreement, the firm's participation may continue to be counted toward ACDBE goals for the remainder of the term of the contract or other agreement (but not extensions or renewals of such contracts or agreements).

(k) Do not count costs incurred in connection with the renovation, repair, or construction of a concession facility (sometimes referred to as the ''build-out'').

(l) Do not count the ACDBE participation of car rental companies toward your ACDBE achievements toward this goal.

§ 23.57 What happens if a recipient falls short of meeting its overall goals?

(a) You cannot be penalized, or treated by the Department as being in noncompliance with this part, simply because your ACDBE participation falls short of your overall goals. You can be penalized or treated as being in noncompliance only if you have failed to administer your ACDBE program in good faith.

(b) If your ACDBE participation falls short of your overall goals, FAA may require you to submit to the FAA a statement of the reasons why you were unable to meet it and the steps you are taking to meet your overall goals or to adjust them based on changed circumstances.

(c) In response to your submission, FAA may require you to implement appropriate remedial measures,

§ 23.59 What is the role of the statutory 10 percent goal in the ACDBE program?

(a) The statute authorizing the ACDBE program provides that, except to the extent the Secretary determines otherwise, not less than 10 percent of concession businesses are to be ACDBEs.

(b) This 10 percent goal is an aspirational goal at the national level, which the Department uses as a tool in evaluating and monitoring DBEs' opportunities to participate in airport concessions.

(c) The national 10 percent aspirational goal does not authorize or require recipients to set overall or concession-specific goals at the 10 percent level, or any other particular level, or to take any special administrative steps if their goals are above or below 10 percent.

§ 23.61 Can recipients use quotas or set-asides as part of their ACDBE programs?

You must not use quotas or set-asides for ACDBE participation in your program.

Subpart E—Other Provisions

§ 23.71 Does a recipient have to change existing concession agreements?

Nothing in this part requires you to modify or abrogate an existing concession agreement (one executed before April 21, 2005) during its term. When an extension or option to renew such an agreement is exercised, or when a material amendment is made, you must assess potential for ACDBE participation and may, if permitted by the agreement, use any means authorized by this part to obtain a modified amount of ACDBE participation in the renewed or amended agreement.

§ 23.73 What requirements apply to privately-owned or leased terminal buildings?

(a) If you are a recipient who is required to implement an ACDBE program on whose airport there is a privately-owned or leased terminal building that has concessions, or any portion of such a building, this section applies to you.

(b) You must pass through the applicable requirements of this part to the private terminal owner or lessee via your agreement with the owner or lessee or by other means. You must ensure that the terminal owner or lessee complies with the requirements of this part.

(c) If your airport is a primary airport, you must obtain from the terminal owner or lessee the goals and other elements of the ACDBE program required under this part. You must incorporate this information into your concession plan and submit it to the FAA in accordance with this part.

(d) If the terminal building is at a non-primary commercial service airport or general aviation airport or reliever airport, you must ensure that the owner complies with the requirements in § 23.21(e).

§ 23.75 Can recipients enter into long-term, exclusive agreements with concessionaires?

(a) Except as provided in paragraph (b) of this section, you must not enter into long-term, exclusive agreements for concessions. For purposes of this section, a long-term agreement is one having a term longer than five years.

(b) You may enter into a long-term, exclusive concession agreement only under the following conditions:

(1) Special local circumstances exist that make it important to enter such agreement, and

(2) The responsible FAA regional office approves your plan for meeting the standards of paragraph (c) of this section.

(c) In order to obtain FAA approval of a long-term-exclusive concession agreement, you must submit the following information to the FAA regional office:

(1) A description of the special local circumstances that warrant a long-term, exclusive agreement.

(2) A copy of the draft and final leasing and subleasing or other agreements. This long-term, exclusive agreement must provide that:

(i) A number of ACDBEs that reasonably reflects their availability in your market area, in the absence of discrimination, to do the types of work required will participate as concessionaires throughout the term of the agreement and account for at a percentage of the estimated annual gross receipts equivalent to a level set in accordance with §§ 23.47 through 23.49 of this part.

(ii) You will review the extent of ACDBE participation before the exercise of each renewal option to consider whether an increase or decrease in ACDBE participation is warranted.

(iii) An ACDBE concessionaire that is unable to perform successfully will be replaced by another ACDBE concessionaire, if the remaining term of the agreement makes this feasible. In the event that such action is not feasible, you will require the concessionaire to make good faith efforts during the remaining term of the agreement to encourage ACDBEs to compete for the purchases and/or leases of goods and services to be made by the concessionaire.

(3) Assurances that any ACDBE participant will be in an acceptable form, such as a sublease, joint venture, or partnership.

(4) Documentation that ACDBE participants are properly certified.

(5) A description of the type of business or businesses to be operated (*e.g.*, location, storage and delivery space, ''back-of-the-house facilities'' such as kitchens, window display space, advertising space, and other amenities that will increase the ACDBE's chance to succeed).

(6) Information on the investment required on the part of the ACDBE and any unusual management or financial arrangements between the prime concessionaire and ACDBE.

(7) Information on the estimated gross receipts and net profit to be earned by the ACDBE.

§ 23.77 Does this part preempt local requirements?

(a) In the event that a State or local law, regulation, or policy differs from the requirements of this part, the recipient must, as a condition of remaining eligible to receive Federal financial assistance from the DOT, take such steps as may be necessary to comply with the requirements of this part.

(b) You must clearly identify any State or local law, regulation, or policy

pertaining to minority, women's, or disadvantaged business enterprise concerning airport concessions that adds to, goes beyond, or imposes more stringent requirements than the provisions of this part. FAA will determine whether such a law, regulation, or policy conflicts with this part, in which case the requirements of this part will govern.

(c) If not deemed in conflict by the FAA, you must write and administer such a State or local law, policy, or regulation separately from the ACDBE program.

(d) You must provide copies of any such provisions and the legal authority supporting them to the FAA with your ACDBE program submission. FAA will not approve an ACDBE program if there are such provisions that conflict with the provisions of this part.

(e) However, nothing in this part preempts any State or local law, regulation, or policy enacted by the governing body of a recipient, or the authority of any State or local government or recipient to adopt or enforce any law, regulation, or policy relating to ACDBEs, as long as the law, regulation, or policy does not conflict with this part.

§ 23.79 Does this part permit recipients to use local geographic preferences?

No. As a recipient you must not use a local geographic preference. For purposes of this section, a local geographic preference is any requirement that gives an ACDBE located in one place (*e.g.*, your local area) an advantage over ACDBEs from other places in obtaining business as, or with, a concession at your airport.

APPENDIX A TO PART 23—UNIFORM REPORT OF ACDBE PARTICIPATION

INSTRUCTIONS FOR UNIFORM REPORT OF ACDBE PARTICIPATION

1. Insert name of airport receiving FAA financial assistance and AIP number.

2. Provide the name and contact information (phone, fax, e-mail) for the person FAA should contact with questions about the report.

3a. Provide the annual reporting period to which the report pertains (*e.g.*, October 2005–September 2006).

3b. Provide the date on which the report is submitted to FAA.

4. This block and blocks 5 and 6 concern *non-car rental* goals and participation only. In this block, provide the overall non-car rental percentage goal and the race-conscious (RC) and race-neutral (RN) components of it. The RC and RN percentages should add up to the overall percentage goal.

5. For purposes of this block and blocks 6, 8, and 9, the participation categories listed at the left of the block are the following: ''Prime Concessions'' are concessions who have a direct relationship with the airport (*e.g.*, a company who has a lease agreement directly with the airport to operate a concession). A ''subconcession'' is a firm that has a sublease or other agreement with a prime concessionaire, rather than with the airport itself, to operate a concession at the airport. A ''management contract'' is an agreement between the airport and a firm to manage a portion of the airport's facilities or operations (*e.g.*, manage the parking facilities). ''Goods/services'' refers to those goods and services purchased by the airport itself or by concessionaires and management contractors from certified DBEs.

Block 5 concerns *all* non-car rental concession activity covered by 49 CFR part 23 during the reporting period, both new or continuing.

In Column A, enter the total concession gross revenues for concessionaires (prime and sub) and purchases of goods and services (ACDBE and non-ACDBE combined) at the airport. In Column B, enter the number of lease agreements, contracts, etc. in effect or taking place during the reporting period in each participation category for all concessionaires and purchases of goods and services (ACDBE and non-ACDBE combined).

Because, by statute, non-ACDBE management contracts do not count as part of the base for ACDBE goals, the cells for total management contract participation and ACDBE participation as a percentage of total management contracting dollars are not intended to be filled in blocks 5, 6, 8, and 9.

In Column C, enter the total gross revenues in each participation category (ACDBEs) only. In Column D, enter the number of lease agreements, contracts, etc., in effect or entered into during the reporting period in each participation category for all concessionaires and purchases of goods and services (ACDBEs only).

Columns E and F are subsets of Column C: break out the total gross revenues listed in Column C into the portions that are attributable to race-conscious and race-neutral measures, respectively. Column G is a percentage calculation. It answers the question, what percentage of the numbers in Column A is represented by the corresponding numbers in Column C?

6. The numbers in this Block concern only *new* non-car rental concession opportunities that arose during the current reporting period. In other words, the information requested in Block 6 is a subset of that requested in Block 5. Otherwise, this Block is filled out in the same way as Block 5.

7. Blocks 7–9 concern car rental goals and participation. In Block 7, provide the overall car rental percentage goal and the race-conscious (RC) and race-neutral (RN) components of it. The RC and RN percentages should add up to the overall percentage goal.

8. Block 8 is parallel to Block 5, except that it is for car rentals. The instructions for filling it out are the same as for Block 5.

9. Block 9 is parallel to Block 6, except that it is for car rentals. The information requested in Block 9 is a subset of that requested in Block 8. The instructions for filling it out are the same as for Block 6.

10. Block 10 instructs recipients to bring forward the cumulative ACDBE participation figures from Blocks 5 and 8, breaking down these figures by race and gender categories. Participation by non-minority women-owned firms should be listed in the ''non-minority women'' column. Participation by firms owned by minority women should be listed in the appropriate minority group column. The ''other'' column should be used to reflect participation by individuals who are not a member of a presumptively disadvantaged group who have been found disadvantaged on a case-by-case basis.

11. This block instructs recipients to attach five information items for each ACDBE firm participating in its program during the reporting period. If the firm's participation numbers are reflected in Blocks 5–6 and/or 8–9, the requested information about that firm should be attached in response to this item.

UNIFORM REPORT OF ACDBE PARTICIPATION

1. Name of Recipient and AIP Number:

2. Contact Information:

3a. Reporting Period:

3b. Date of Report:

4. Current Non-Car Rental ACDBE Goal: Race Conscious Goal ___% Race Neutral Goal ___% Overall Goal ___%

5. Non-car rental Cumulative ACDBE participation	A Total dollars (everyone)	B Total number (everyone)	C Total to ACDBEs (dollars)	D Total to ACDBEs (number)	E RC to ACDBEs (dollars)	F RN to ACDBEs (dollars)	G % of dollars to ACDBEs
Prime Concessions.							
Subconcessions.							
Management Contracts	XXXXXXX	XXXXXXX					XXXXXX
Goods/Services.							
Totals.							

6. Non-Car rental New ACDBE participation this period	A Total dollars (everyone)	B Total number (everyone)	C Total to ACDBEs (dollars)	D Total to ACDBEs (number)	E RC to ACDBEs (dollars)	F RN to ACDBEs (dollars)	G % of dollars to ACDBEs
Prime Concessions.							
Subconcessions.							
Management Contracts	XXXXXXX	XXXXXXX				XXXXXX	
Goods/Services.							
Totals.							

7. Current Car Rental ACDBE Goal: Race Conscious Goal ___% Race Neutral Goal ___% Overall Goal ___%

8. Car rental Cumulative ACDBE participation	A Total dollars (everyone)	B Total number (everyone)	C Total to ACDBEs (dollars)	D Total to ACDBEs (number)	E RC to ACDBEs (dollars)	F RN to ACDBEs (dollars)	G % of dollars to ACDBEs
Prime Concessions.							
Subconcessions.							
Goods/Services.							
Totals.							

9. Car rental New ACDBE participation this period	A Total dollars (everyone)	B Total number (everyone)	C Total to ACDBEs (dollars)	D Total to ACDBEs (number)	E RC to ACDBEs (dollars)	F RN to ACDBEs (dollars)	G % of dollars to ACDBEs
Prime Concessions.							
Subconcessions.							

9. Car rental New ACDBE participation this period	A Total dollars (everyone)	B Total number (everyone)	C Total to ACDBEs (dollars)	D Total to ACDBEs (number)	E RC to ACDBEs (dollars)	F RN to ACDBEs (dollars)	G % of dollars to ACDBEs
Goods/Services. Totals.							

10. Cumulative ACDBE participation by race/gender	A Black Americans	B Hispanic Americans	C Asian-Pacific Americans	D Asian-Indian Americans	E Native Americans	F Non-minority Women	G Other	H Totals
Car Rental. Non-Car Rental. Totals.								

11. On an attachment, list the following information for each ACDBE firm participating in your program during the period of this report: (1) Firm name; (2) Type of business; (3) Beginning and expiration dates of agreement, including options to renew; (4) Dates that material amendments have been or will be made to agreement (if known); (5) Estimated gross receipts for the firm during this reporting period.

PART 24—UNIFORM RELOCATION ASSISTANCE AND REAL PROPERTY ACQUISITION FOR FEDERAL AND FEDERALLY-ASSISTED PROGRAMS

Subpart A—General

Sec.
24.1 Purpose.
24.2 Definitions and acronyms.
24.3 No duplication of payments.
24.4 Assurances, monitoring and corrective action.
24.5 Manner of notices.
24.6 Administration of jointly-funded projects.
24.7 Federal Agency waiver of regulations.
24.8 Compliance with other laws and regulations.
24.9 Recordkeeping and reports.
24.10 Appeals.

Subpart B—Real Property Acquisition

24.101 Applicability of acquisition requirements.
24.102 Basic acquisition policies.
24.103 Criteria for appraisals.
24.104 Review of appraisals.
24.105 Acquisition of tenant-owned improvements.
24.106 Expenses incidental to transfer of title to the Agency.
24.107 Certain litigation expenses.
24.108 Donations.

Subpart C—General Relocation Requirements

24.201 Purpose.
24.202 Applicability.
24.203 Relocation notices.
24.204 Availability of comparable replacement dwelling before displacement.
24.205 Relocation planning, advisory services, and coordination.
24.206 Eviction for cause.
24.207 General requirements claims for relocation payments.
24.208 Aliens not lawfully present in the United States.
24.209 Relocation payments not considered as income.

Subpart D—Payments for Moving and Related Expenses

24.301 Payment for actual reasonable moving and related expenses.
24.302 Fixed payment for moving expenses'residential moves.
24.303 Related nonresidential eligible expenses.
24.304 Reestablishment expenses'nonresidential moves.
24.305 Fixed payment for moving expenses'nonresidential moves.
24.306 Discretionary utility relocation payments.

Subpart E—Replacement Housing Payments

24.401 Replacement housing payment for 180-day homeowner-occupants.
24.402 Replacement housing payment for 90-day occupants.
24.403 Additional rules governing replacement housing payments.
24.404 Replacement housing of last resort.

Subpart F—Mobile Homes

24.501 Applicability.
24.502 Replacement housing payment for 180-day mobile homeowner displaced

from a mobile home, and/or from the acquired mobile home site.
24.503 Replacement housing payment for 90-day mobile home occupants.

Subpart G—Certification

24.601 Purpose.
24.602 Certification application.
24.603 Monitoring and corrective action.
APPENDIX A TO PART 24—ADDITIONAL INFORMATION
APPENDIX B TO PART 24—STATISTICAL REPORT FORM

AUTHORITY: 42 U.S.C. 4601 *et seq.*; 49 CFR 1.48(cc).

SOURCE: 70 FR 611, Jan. 4, 2005, unless otherwise noted.

Subpart A—General

§ 24.1 Purpose.

The purpose of this part is to promulgate rules to implement the Uniform Relocation Assistance and Real Property Acquisition Policies Act of 1970, as amended (42 U.S.C. 4601 *et seq.*) (Uniform Act), in accordance with the following objectives:

(a) To ensure that owners of real property to be acquired for Federal and federally-assisted projects are treated fairly and consistently, to encourage and expedite acquisition by agreements with such owners, to minimize litigation and relieve congestion in the courts, and to promote public confidence in Federal and federally-assisted land acquisition programs;

(b) To ensure that persons displaced as a direct result of Federal or federally-assisted projects are treated fairly, consistently, and equitably so that such displaced persons will not suffer disproportionate injuries as a result of projects designed for the benefit of the public as a whole; and

(c) To ensure that Agencies implement these regulations in a manner that is efficient and cost effective.

§ 24.2 Definitions and acronyms.

(a) *Definitions.* Unless otherwise noted, the following terms used in this part shall be understood as defined in this section:

(1) *Agency.* The term *Agency* means the Federal Agency, State, State Agency, or person that acquires real property or displaces a person.

(i) *Acquiring Agency.* The term *acquiring Agency* means a State Agency, as defined in paragraph (a)(1)(iv) of this section, which has the authority to acquire property by eminent domain under State law, and a State Agency or person which does not have such authority.

(ii) *Displacing Agency.* The term *displacing Agency* means any Federal Agency carrying out a program or project, and any State, State Agency, or person carrying out a program or project with Federal financial assistance, which causes a person to be a displaced person.

(iii) *Federal Agency.* The term *Federal Agency* means any department, Agency, or instrumentality in the executive branch of the government, any wholly owned government corporation, the Architect of the Capitol, the Federal Reserve Banks and branches thereof, and any person who has the authority to acquire property by eminent domain under Federal law.

(iv) *State Agency.* The term *State Agency* means any department, Agency or instrumentality of a State or of a political subdivision of a State, any department, Agency, or instrumentality of two or more States or of two or more political subdivisions of a State or States, and any person who has the authority to acquire property by eminent domain under State law.

(2) *Alien not lawfully present in the United States.* The phrase ''alien not lawfully present in the United States'' means an alien who is not ''lawfully present'' in the United States as defined in 8 CFR 103.12 and includes:

(i) An alien present in the United States who has not been admitted or paroled into the United States pursuant to the Immigration and Nationality Act (8 U.S.C. 1101 *et seq.*) and whose stay in the United States has not been authorized by the United States Attorney General; and,

(ii) An alien who is present in the United States after the expiration of the period of stay authorized by the United States Attorney General or who otherwise violates the terms and conditions of admission, parole or authorization to stay in the United States.

(3) *Appraisal.* The term *appraisal* means a written statement independently and impartially prepared by a qualified appraiser setting forth an opinion of defined value of an adequately described property as of a specific date, supported by the presentation and analysis of relevant market information.

(4) *Business.* The term *business* means any lawful activity, except a farm operation, that is conducted:

(i) Primarily for the purchase, sale, lease and/or rental of personal and/or real property, and/or for the manufacture, processing, and/or marketing of products, commodities, and/or any other personal property;

(ii) Primarily for the sale of services to the public;

(iii) Primarily for outdoor advertising display purposes, when the display must be moved as a result of the project; or

(iv) By a nonprofit organization that has established its nonprofit status under applicable Federal or State law.

(5) *Citizen.* The term *citizen* for purposes of this part includes both citizens of the United States and noncitizen nationals.

(6) *Comparable replacement dwelling.* The term *comparable replacement dwelling* means a dwelling which is:

(i) Decent, safe and sanitary as described in paragraph 24.2(a)(8) of this section;

(ii) Functionally equivalent to the displacement dwelling. The term *functionally equivalent* means that it performs the same function, and provides the same utility. While a comparable replacement dwelling need not possess every feature of the displacement dwelling, the principal features must be present. Generally, functional equivalency is an objective standard, reflecting the range of purposes for which the various physical features of a dwelling may be used. However, in determining whether a replacement dwelling is functionally equivalent to the displacement dwelling, the Agency may consider reasonable trade-offs for specific features when the replacement unit is equal to or better than the displacement dwelling (*See* appendix A, § 24.2(a)(6));

(iii) Adequate in size to accommodate the occupants;

(iv) In an area not subject to unreasonable adverse environmental conditions;

(v) In a location generally not less desirable than the location of the displaced person's dwelling with respect to public utilities and commercial and public facilities, and reasonably accessible to the person's place of employment;

(vi) On a site that is typical in size for residential development with normal site improvements, including customary landscaping. The site need not include special improvements such as outbuildings, swimming pools, or greenhouses. (See also § 24.403(a)(2));

(vii) Currently available to the displaced person on the private market except as provided in paragraph (a)(6)(ix) of this section (See appendix A, § 24.2(a)(6)(vii)); and

(viii) Within the financial means of the displaced person:

(A) A replacement dwelling purchased by a homeowner in occupancy at the displacement dwelling for at least 180 days prior to initiation of negotiations (180-day homeowner) is considered to be within the homeowner's financial means if the homeowner will receive the full price differential as described in § 24.401(c), all increased mortgage interest costs as described at § 24.401(d) and all incidental expenses as described at § 24.401(e), plus any additional amount required to be paid under § 24.404, Replacement housing of last resort.

(B) A replacement dwelling rented by an eligible displaced person is considered to be within his or her financial means if, after receiving rental assistance under this part, the person's monthly rent and estimated average monthly utility costs for the replacement dwelling do not exceed the person's base monthly rental for the displacement dwelling as described at § 24.402(b)(2).

(C) For a displaced person who is not eligible to receive a replacement housing payment because of the person's failure to meet length-of-occupancy requirements, comparable replacement rental housing is considered to be within the person's financial means if an

Agency pays that portion of the monthly housing costs of a replacement dwelling which exceeds the person's base monthly rent for the displacement dwelling as described in § 24.402(b)(2). Such rental assistance must be paid under § 24.404, Replacement housing of last resort.

(ix) For a person receiving government housing assistance before displacement, a dwelling that may reflect similar government housing assistance. In such cases any requirements of the government housing assistance program relating to the size of the replacement dwelling shall apply. (*See* appendix A, § 24.2(a)(6)(ix).)

(7) *Contribute materially.* The term *contribute materially* means that during the 2 taxable years prior to the taxable year in which displacement occurs, or during such other period as the Agency determines to be more equitable, a business or farm operation:

(i) Had average annual gross receipts of at least $5,000; or

(ii) Had average annual net earnings of at least $1,000; or

(iii) Contributed at least 33⅓ percent of the owner's or operator's average annual gross income from all sources.

(iv) If the application of the above criteria creates an inequity or hardship in any given case, the Agency may approve the use of other criteria as determined appropriate.

(8) *Decent, safe, and sanitary dwelling.* The term *decent, safe, and sanitary dwelling* means a dwelling which meets local housing and occupancy codes. However, any of the following standards which are not met by the local code shall apply unless waived for good cause by the Federal Agency funding the project. The dwelling shall:

(i) Be structurally sound, weather tight, and in good repair;

(ii) Contain a safe electrical wiring system adequate for lighting and other devices;

(iii) Contain a heating system capable of sustaining a healthful temperature (of approximately 70 degrees) for a displaced person, except in those areas where local climatic conditions do not require such a system;

(iv) Be adequate in size with respect to the number of rooms and area of living space needed to accommodate the displaced person. The number of persons occupying each habitable room used for sleeping purposes shall not exceed that permitted by local housing codes or, in the absence of local codes, the policies of the displacing Agency. In addition, the displacing Agency shall follow the requirements for separate bedrooms for children of the opposite gender included in local housing codes or in the absence of local codes, the policies of such Agencies;

(v) There shall be a separate, well lighted and ventilated bathroom that provides privacy to the user and contains a sink, bathtub or shower stall, and a toilet, all in good working order and properly connected to appropriate sources of water and to a sewage drainage system. In the case of a housekeeping dwelling, there shall be a kitchen area that contains a fully usable sink, properly connected to potable hot and cold water and to a sewage drainage system, and adequate space and utility service connections for a stove and refrigerator;

(vi) Contains unobstructed egress to safe, open space at ground level; and

(vii) For a displaced person with a disability, be free of any barriers which would preclude reasonable ingress, egress, or use of the dwelling by such displaced person. (See appendix A, § 24.2(a)(8)(vii).)

(9) *Displaced person.* (i) *General.* The term *displaced person* means, except as provided in paragraph (a)(9)(ii) of this section, any person who moves from the real property or moves his or her personal property from the real property. (This includes a person who occupies the real property prior to its acquisition, but who does not meet the length of occupancy requirements of the Uniform Act as described at § 24.401(a) and § 24.402(a)):

(A) As a direct result of a written notice of intent to acquire (see § 24.203(d)), the initiation of negotiations for, or the acquisition of, such real property in whole or in part for a project;

(B) As a direct result of rehabilitation or demolition for a project; or

(C) As a direct result of a written notice of intent to acquire, or the acquisition, rehabilitation or demolition of, in whole or in part, other real property on which the person conducts a business

or farm operation, for a project. However, eligibility for such person under this paragraph applies only for purposes of obtaining relocation assistance advisory services under § 24.205(c), and moving expenses under § 24.301, § 24.302 or § 24.303.

(ii) *Persons not displaced.* The following is a nonexclusive listing of persons who do not qualify as displaced persons under this part:

(A) A person who moves before the initiation of negotiations (see § 24.403(d)), unless the Agency determines that the person was displaced as a direct result of the program or project;

(B) A person who initially enters into occupancy of the property after the date of its acquisition for the project;

(C) A person who has occupied the property for the purpose of obtaining assistance under the Uniform Act;

(D) A person who is not required to relocate permanently as a direct result of a project. Such determination shall be made by the Agency in accordance with any guidelines established by the Federal Agency funding the project (See appendix A, § 24.2(a)(9)(ii)(D));

(E) An owner-occupant who moves as a result of an acquisition of real property as described in §§ 24.101(a)(2) or 24.101(b)(1) or (2), or as a result of the rehabilitation or demolition of the real property. (However, the displacement of a tenant as a direct result of any acquisition, rehabilitation or demolition for a Federal or federally-assisted project is subject to this part.);

(F) A person whom the Agency determines is not displaced as a direct result of a partial acquisition;

(G) A person who, after receiving a notice of relocation eligibility (described at § 24.203(b)), is notified in writing that he or she will not be displaced for a project. Such written notification shall not be issued unless the person has not moved and the Agency agrees to reimburse the person for any expenses incurred to satisfy any binding contractual relocation obligations entered into after the effective date of the notice of relocation eligibility;

(H) An owner-occupant who conveys his or her property, as described in §§ 24.101(a)(2) or 24.101(b)(1) or (2), after being informed in writing that if a mutually satisfactory agreement on terms of the conveyance cannot be reached, the Agency will not acquire the property. In such cases, however, any resulting displacement of a tenant is subject to the regulations in this part;

(I) A person who retains the right of use and occupancy of the real property for life following its acquisition by the Agency;

(J) An owner who retains the right of use and occupancy of the real property for a fixed term after its acquisition by the Department of the Interior under Pub. L. 93–477, Appropriations for National Park System, or Pub. L. 93–303, Land and Water Conservation Fund, except that such owner remains a displaced person for purposes of subpart D of this part;

(K) A person who is determined to be in unlawful occupancy prior to or after the initiation of negotiations, or a person who has been evicted for cause, under applicable law, as provided for in § 24.206. However, advisory assistance may be provided to unlawful occupants at the option of the Agency in order to facilitate the project;

(L) A person who is not lawfully present in the United States and who has been determined to be ineligible for relocation assistance in accordance with § 24.208; or

(M) Tenants required to move as a result of the sale of their dwelling to a person using downpayment assistance provided under the American Dream Downpayment Initiative (ADDI) authorized by section 102 of the American Dream Downpayment Act (Pub. L. 108–186; codified at 42 U.S.C. 12821).

(10) *Dwelling.* The term *dwelling* means the place of permanent or customary and usual residence of a person, according to local custom or law, including a single family house; a single family unit in a two-family, multi-family, or multi-purpose property; a unit of a condominium or cooperative housing project; a non-housekeeping unit; a mobile home; or any other residential unit.

(11) *Dwelling site.* The term *dwelling site* means a land area that is typical in size for similar dwellings located in the same neighborhood or rural area. (See appendix A, § 24.2(a)(11).)

(12) *Farm operation*. The term *farm operation* means any activity conducted solely or primarily for the production of one or more agricultural products or commodities, including timber, for sale or home use, and customarily producing such products or commodities in sufficient quantity to be capable of contributing materially to the operator's support.

(13) *Federal financial assistance*. The term *Federal financial assistance* means a grant, loan, or contribution provided by the United States, except any Federal guarantee or insurance and any interest reduction payment to an individual in connection with the purchase and occupancy of a residence by that individual.

(14) *Household income*. The term *household income* means total gross income received for a 12 month period from all sources (earned and unearned) including, but not limited to wages, salary, child support, alimony, unemployment benefits, workers compensation, social security, or the net income from a business. It does not include income received or earned by dependent children and full time students under 18 years of age. (*See* appendix A, § 24.2(a)(14) for examples of exclusions to income.)

(15) *Initiation of negotiations*. Unless a different action is specified in applicable Federal program regulations, the term *initiation of negotiations* means the following:

(i) Whenever the displacement results from the acquisition of the real property by a Federal Agency or State Agency, the *initiation of negotiations* means the delivery of the initial written offer of just compensation by the Agency to the owner or the owner's representative to purchase the real property for the project. However, if the Federal Agency or State Agency issues a notice of its intent to acquire the real property, and a person moves after that notice, but before delivery of the initial written purchase offer, the *initiation of negotiations* means the actual move of the person from the property.

(ii) Whenever the displacement is caused by rehabilitation, demolition or privately undertaken acquisition of the real property (and there is no related acquisition by a Federal Agency or a State Agency), the *initiation of negotiations* means the notice to the person that he or she will be displaced by the project or, if there is no notice, the actual move of the person from the property.

(iii) In the case of a permanent relocation to protect the public health and welfare, under the Comprehensive Environmental Response Compensation and Liability Act of 1980 (Pub. L. 96–510, or Superfund) (CERCLA) the *initiation of negotiations* means the formal announcement of such relocation or the Federal or federally-coordinated health advisory where the Federal Government later decides to conduct a permanent relocation.

(iv) In the case of permanent relocation of a tenant as a result of an acquisition of real property described in § 24.101(b)(1) through (5), the initiation of negotiations means the actions described in § 24.2(a)(15)(i) and (ii), except that such initiation of negotiations does not become effective, for purposes of establishing eligibility for relocation assistance for such tenants under this part, until there is a written agreement between the Agency and the owner to purchase the real property. (See appendix A, § 24.2(a)(15)(iv)).

(16) *Lead Agency*. The term *Lead Agency* means the Department of Transportation acting through the Federal Highway Administration.

(17) *Mobile home*. The term *mobile home* includes manufactured homes and recreational vehicles used as residences. (*See* appendix A, § 24.2(a)(17)).

(18) *Mortgage*. The term *mortgage* means such classes of liens as are commonly given to secure advances on, or the unpaid purchase price of, real property, under the laws of the State in which the real property is located, together with the credit instruments, if any, secured thereby.

(19) *Nonprofit organization*. The term *nonprofit organization* means an organization that is incorporated under the applicable laws of a State as a nonprofit organization, and exempt from paying Federal income taxes under section 501 of the Internal Revenue Code (26 U.S.C. 501).

(20) *Owner of a dwelling*. The term *owner of a dwelling* means a person who

is considered to have met the requirement to own a dwelling if the person purchases or holds any of the following interests in real property:

(i) Fee title, a life estate, a land contract, a 99 year lease, or a lease including any options for extension with at least 50 years to run from the date of acquisition; or

(ii) An interest in a cooperative housing project which includes the right to occupy a dwelling; or

(iii) A contract to purchase any of the interests or estates described in §24.2(a)(1)(i) or (ii) of this section; or

(iv) Any other interest, including a partial interest, which in the judgment of the Agency warrants consideration as ownership.

(21) *Person.* The term *person* means any individual, family, partnership, corporation, or association.

(22) *Program or project.* The phrase *program or project* means any activity or series of activities undertaken by a Federal Agency or with Federal financial assistance received or anticipated in any phase of an undertaking in accordance with the Federal funding Agency guidelines.

(23) *Salvage value.* The term *salvage value* means the probable sale price of an item offered for sale to knowledgeable buyers with the requirement that it be removed from the property at a buyer's expense (i.e., not eligible for relocation assistance). This includes items for re-use as well as items with components that can be re-used or recycled when there is no reasonable prospect for sale except on this basis.

(24) *Small business.* A *small business* is a business having not more than 500 employees working at the site being acquired or displaced by a program or project, which site is the location of economic activity. Sites occupied solely by outdoor advertising signs, displays, or devices do not qualify as a business for purposes of §24.304.

(25) *State.* Any of the several States of the United States or the District of Columbia, the Commonwealth of Puerto Rico, any territory or possession of the United States, or a political subdivision of any of these jurisdictions.

(26) *Tenant.* The term *tenant* means a person who has the temporary use and occupancy of real property owned by another.

(27) *Uneconomic remnant.* The term *uneconomic remnant* means a parcel of real property in which the owner is left with an interest after the partial acquisition of the owner's property, and which the Agency has determined has little or no value or utility to the owner.

(28) *Uniform Act.* The term *Uniform Act* means the Uniform Relocation Assistance and Real Property Acquisition Policies Act of 1970 (Pub. L. 91–646, 84 Stat. 1894; 42 U.S.C. 4601 *et seq.*), and amendments thereto.

(29) *Unlawful occupant.* A person who occupies without property right, title or payment of rent or a person legally evicted, with no legal rights to occupy a property under State law. An Agency, at its discretion, may consider such person to be in lawful occupancy.

(30) *Utility costs.* The term *utility costs* means expenses for electricity, gas, other heating and cooking fuels, water and sewer.

(31) *Utility facility.* The term *utility facility* means any electric, gas, water, steam power, or materials transmission or distribution system; any transportation system; any communications system, including cable television; and any fixtures, equipment, or other property associated with the operation, maintenance, or repair of any such system. A utility facility may be publicly, privately, or cooperatively owned.

(32) *Utility relocation.* The term *utility relocation* means the adjustment of a utility facility required by the program or project undertaken by the displacing Agency. It includes removing and reinstalling the facility, including necessary temporary facilities; acquiring necessary right-of-way on a new location; moving, rearranging or changing the type of existing facilities; and taking any necessary safety and protective measures. It shall also mean constructing a replacement facility that has the functional equivalency of the existing facility and is necessary for the continued operation of the utility service, the project economy, or sequence of project construction.

(33) *Waiver valuation.* The term *waiver valuation* means the valuation process

used and the product produced when the Agency determines that an appraisal is not required, pursuant to § 24.102(c)(2) appraisal waiver provisions.

(b) *Acronyms.* The following acronyms are commonly used in the implementation of programs subject to this regulation:

(1) BCIS. Bureau of Citizenship and Immigration Service.

(2) FEMA. Federal Emergency Management Agency.

(3) FHA. Federal Housing Administration.

(4) FHWA. Federal Highway Administration.

(5) FIRREA. Financial Institutions Reform, Recovery, and Enforcement Act of 1989.

(6) HLR. Housing of last resort.

(7) HUD. U.S. Department of Housing and Urban Development.

(8) MIDP. Mortgage interest differential payment.

(9) RHP. Replacement housing payment.

(10) STURAA. Surface Transportation and Uniform Relocation Act Amendments of 1987.

(11) URA. Uniform Relocation Assistance and Real Property Acquisition Policies Act of 1970.

(12) USDOT. U.S. Department of Transportation.

(13) USPAP. Uniform Standards of Professional Appraisal Practice.

§ 24.3 No duplication of payments.

No person shall receive any payment under this part if that person receives a payment under Federal, State, local law, or insurance proceeds which is determined by the Agency to have the same purpose and effect as such payment under this part. (See appendix A, § 24.3).

§ 24.4 Assurances, monitoring and corrective action.

(a) *Assurances.* (1) Before a Federal Agency may approve any grant to, or contract, or agreement with, a State Agency under which Federal financial assistance will be made available for a project which results in real property acquisition or displacement that is subject to the Uniform Act, the State Agency must provide appropriate assurances that it will comply with the Uniform Act and this part. A displacing Agency's assurances shall be in accordance with section 210 of the Uniform Act. An acquiring Agency's assurances shall be in accordance with section 305 of the Uniform Act and must contain specific reference to any State law which the Agency believes provides an exception to §§ 301 or 302 of the Uniform Act. If, in the judgment of the Federal Agency, Uniform Act compliance will be served, a State Agency may provide these assurances at one time to cover all subsequent federally-assisted programs or projects. An Agency, which both acquires real property and displaces persons, may combine its section 210 and section 305 assurances in one document.

(2) If a Federal Agency or State Agency provides Federal financial assistance to a ''person'' causing displacement, such Federal or State Agency is responsible for ensuring compliance with the requirements of this part, notwithstanding the person's contractual obligation to the grantee to comply.

(3) As an alternative to the assurance requirement described in paragraph (a)(1) of this section, a Federal Agency may provide Federal financial assistance to a State Agency after it has accepted a certification by such State Agency in accordance with the requirements in subpart G of this part.

(b) *Monitoring and corrective action.* The Federal Agency will monitor compliance with this part, and the State Agency shall take whatever corrective action is necessary to comply with the Uniform Act and this part. The Federal Agency may also apply sanctions in accordance with applicable program regulations. (Also see § 24.603, of this part).

(c) *Prevention of fraud, waste, and mismanagement.* The Agency shall take appropriate measures to carry out this part in a manner that minimizes fraud, waste, and mismanagement.

§ 24.5 Manner of notices.

Each notice which the Agency is required to provide to a property owner or occupant under this part, except the notice described at § 24.102(b), shall be personally served or sent by certified

or registered first-class mail, return receipt requested, and documented in Agency files. Each notice shall be written in plain, understandable language. Persons who are unable to read and understand the notice must be provided with appropriate translation and counseling. Each notice shall indicate the name and telephone number of a person who may be contacted for answers to questions or other needed help.

§ 24.6 Administration of jointly-funded projects.

Whenever two or more Federal Agencies provide financial assistance to an Agency or Agencies, other than a Federal Agency, to carry out functionally or geographically related activities, which will result in the acquisition of property or the displacement of a person, the Federal Agencies may by agreement designate one such Agency as the cognizant Federal Agency. In the unlikely event that agreement among the Agencies cannot be reached as to which Agency shall be the cognizant Federal Agency, then the Lead Agency shall designate one of such Agencies to assume the cognizant role. At a minimum, the agreement shall set forth the federally-assisted activities which are subject to its terms and cite any policies and procedures, in addition to this part, that are applicable to the activities under the agreement. Under the agreement, the cognizant Federal Agency shall assure that the project is in compliance with the provisions of the Uniform Act and this part. All federally-assisted activities under the agreement shall be deemed a project for the purposes of this part.

§ 24.7 Federal Agency waiver of regulations.

The Federal Agency funding the project may waive any requirement in this part not required by law if it determines that the waiver does not reduce any assistance or protection provided to an owner or displaced person under this part. Any request for a waiver shall be justified on a case-by-case basis.

§ 24.8 Compliance with other laws and regulations.

The implementation of this part must be in compliance with other applicable Federal laws and implementing regulations, including, but not limited to, the following:

(a) Section I of the Civil Rights Act of 1866 (42 U.S.C. 1982 *et seq.*).

(b) Title VI of the Civil Rights Act of 1964 (42 U.S.C. 2000d *et seq.*).

(c) Title VIII of the Civil Rights Act of 1968 (42 U.S.C. 3601 *et seq.*), as amended.

(d) The National Environmental Policy Act of 1969 (42 U.S.C. 4321 *et seq.*).

(e) Section 504 of the Rehabilitation Act of 1973 (29 U.S.C. 790 *et seq.*).

(f) The Flood Disaster Protection Act of 1973 (Pub. L. 93–234).

(g) The Age Discrimination Act of 1975 (42 U.S.C. 6101 *et seq.*).

(h) Executive Order 11063—Equal Opportunity and Housing, as amended by Executive Order 12892.

(i) Executive Order 11246—Equal Employment Opportunity, as amended.

(j) Executive Order 11625—Minority Business Enterprise.

(k) Executive Orders 11988—Floodplain Management, and 11990—Protection of Wetlands.

(l) Executive Order 12250—Leadership and Coordination of Non-Discrimination Laws.

(m) Executive Order 12630—Governmental Actions and Interference with Constitutionally Protected Property Rights.

(n) Robert T. Stafford Disaster Relief and Emergency Assistance Act, as amended (42 U.S.C. 5121 *et seq.*).

(o) Executive Order 12892—Leadership and Coordination of Fair Housing in Federal Programs: Affirmatively Furthering Fair Housing (January 17, 1994).

§ 24.9 Recordkeeping and reports.

(a) *Records.* The Agency shall maintain adequate records of its acquisition and displacement activities in sufficient detail to demonstrate compliance with this part. These records shall be retained for at least 3 years after each owner of a property and each person displaced from the property receives the final payment to which he or she is entitled under this part, or in accordance with the applicable regulations of

the Federal funding Agency, whichever is later.

(b) *Confidentiality of records.* Records maintained by an Agency in accordance with this part are confidential regarding their use as public information, unless applicable law provides otherwise.

(c) *Reports.* The Agency shall submit a report of its real property acquisition and displacement activities under this part if required by the Federal Agency funding the project. A report will not be required more frequently than every 3 years, or as the Uniform Act provides, unless the Federal funding Agency shows good cause. The report shall be prepared and submitted using the format contained in appendix B of this part.

§ 24.10 Appeals.

(a) *General.* The Agency shall promptly review appeals in accordance with the requirements of applicable law and this part.

(b) *Actions which may be appealed.* Any aggrieved person may file a written appeal with the Agency in any case in which the person believes that the Agency has failed to properly consider the person's application for assistance under this part. Such assistance may include, but is not limited to, the person's eligibility for, or the amount of, a payment required under § 24.106 or § 24.107, or a relocation payment required under this part. The Agency shall consider a written appeal regardless of form.

(c) *Time limit for initiating appeal.* The Agency may set a reasonable time limit for a person to file an appeal. The time limit shall not be less than 60 days after the person receives written notification of the Agency's determination on the person's claim.

(d) *Right to representation.* A person has a right to be represented by legal counsel or other representative in connection with his or her appeal, but solely at the person's own expense.

(e) *Review of files by person making appeal.* The Agency shall permit a person to inspect and copy all materials pertinent to his or her appeal, except materials which are classified as confidential by the Agency. The Agency may, however, impose reasonable conditions on the person's right to inspect, consistent with applicable laws.

(f) *Scope of review of appeal.* In deciding an appeal, the Agency shall consider all pertinent justification and other material submitted by the person, and all other available information that is needed to ensure a fair and full review of the appeal.

(g) *Determination and notification after appeal.* Promptly after receipt of all information submitted by a person in support of an appeal, the Agency shall make a written determination on the appeal, including an explanation of the basis on which the decision was made, and furnish the person a copy. If the full relief requested is not granted, the Agency shall advise the person of his or her right to seek judicial review of the Agency decision.

(h) *Agency official to review appeal.* The Agency official conducting the review of the appeal shall be either the head of the Agency or his or her authorized designee. However, the official shall not have been directly involved in the action appealed.

Subpart B—Real Property Acquisition

§ 24.101 Applicability of acquisition requirements.

(a) *Direct Federal program or project.* (1) The requirements of this subpart apply to any acquisition of real property for a direct Federal program or project, except acquisition for a program or project that is undertaken by the Tennessee Valley Authority or the Rural Utilities Service. (*See* appendix A, § 24.101(a).)

(2) If a Federal Agency (except for the Tennessee Valley Authority or the Rural Utilities Service) will not acquire a property because negotiations fail to result in an agreement, the owner of the property shall be so informed in writing. Owners of such properties are not displaced persons, (*see* §§ 24.2(a)(9)(ii)(E) or (H)), and as such, are not entitled to relocation assistance benefits. However, tenants on such properties may be eligible for relocation assistance benefits. (*See* § 24.2(a)(9)).

(b) *Programs and projects receiving Federal financial assistance.* The requirements of this subpart apply to any acquisition of real property for programs and projects where there is Federal financial assistance in any part of project costs except for the acquisitions described in paragraphs (b)(1) through (5) of this section. The relocation assistance provisions in this part are applicable to any tenants that must move as a result of an acquisition described in paragraphs (b)(1) through (5) of this section. Such tenants are considered displaced persons. (*See* § 24.2(a)(9).)

(1) The requirements of Subpart B do not apply to acquisitions that meet all of the following conditions in paragraphs (b)(1)(i) through (iv):

(i) No specific site or property needs to be acquired, although the Agency may limit its search for alternative sites to a general geographic area. Where an Agency wishes to purchase more than one site within a general geographic area on this basis, all owners are to be treated similarly. (*See* appendix A, § 24.101(b)(1)(i).)

(ii) The property to be acquired is not part of an intended, planned, or designated project area where all or substantially all of the property within the area is to be acquired within specific time limits.

(iii) The Agency will not acquire the property if negotiations fail to result in an amicable agreement, and the owner is so informed in writing.

(iv) The Agency will inform the owner in writing of what it believes to be the market value of the property. (*See* appendix A, § 24.101(b)(1)(iv) and (2)(ii).)

(2) Acquisitions for programs or projects undertaken by an Agency or person that receives Federal financial assistance but does not have authority to acquire property by eminent domain, provided that such Agency or person shall:

(i) Prior to making an offer for the property, clearly advise the owner that it is unable to acquire the property if negotiations fail to result in an agreement; and

(ii) Inform the owner in writing of what it believes to be the market value of the property. (*See* appendix A, § 24.101(b)(1)(iv) and (2)(ii).)

(3) The acquisition of real property from a Federal Agency, State, or State Agency, if the Agency desiring to make the purchase does not have authority to acquire the property through condemnation.

(4) The acquisition of real property by a cooperative from a person who, as a condition of membership in the cooperative, has agreed to provide without charge any real property that is needed by the cooperative.

(5) Acquisition for a program or project that receives Federal financial assistance from the Tennessee Valley Authority or the Rural Utilities Service.

(c) *Less-than-full-fee interest in real property.* (1) The provisions of this subpart apply when acquiring fee title subject to retention of a life estate or a life use; to acquisition by leasing where the lease term, including option(s) for extension, is 50 years or more; and to the acquisition of permanent and/or temporary easements necessary for the project. However, the Agency may apply these regulations to any less-than-full-fee acquisition that, in its judgment, should be covered.

(2) The provisions of this subpart do not apply to temporary easements or permits needed solely to perform work intended exclusively for the benefit of the property owner, which work may not be done if agreement cannot be reached.

(d) *Federally-assisted projects.* For projects receiving Federal financial assistance, the provisions of §§ 24.102, 24.103, 24.104, and 24.105 apply to the greatest extent practicable under State law. (*See* § 24.4(a).)

§ 24.102 Basic acquisition policies.

(a) *Expeditious acquisition.* The Agency shall make every reasonable effort to acquire the real property expeditiously by negotiation.

(b) *Notice to owner.* As soon as feasible, the Agency shall notify the owner in writing of the Agency's interest in acquiring the real property and the basic protections provided to the owner by law and this part. (*See* § 24.203.)

(c) *Appraisal, waiver thereof, and invitation to owner.* (1) Before the initiation of negotiations the real property to be acquired shall be appraised, except as provided in § 24.102 (c)(2), and the owner, or the owner's designated representative, shall be given an opportunity to accompany the appraiser during the appraiser's inspection of the property.

(2) An appraisal is not required if:

(i) The owner is donating the property and releases the Agency from its obligation to appraise the property; or

(ii) The Agency determines that an appraisal is unnecessary because the valuation problem is uncomplicated and the anticipated value of the proposed acquisition is estimated at $10,000 or less, based on a review of available data.

(A) When an appraisal is determined to be unnecessary, the Agency shall prepare a waiver valuation.

(B) The person performing the waiver valuation must have sufficient understanding of the local real estate market to be qualified to make the waiver valuation.

(C) The Federal Agency funding the project may approve exceeding the $10,000 threshold, up to a maximum of $25,000, if the Agency acquiring the real property offers the property owner the option of having the Agency appraise the property. If the property owner elects to have the Agency appraise the property, the Agency shall obtain an appraisal and not use procedures described in this paragraph. (See appendix A, § 24.102(c)(2).)

(d) *Establishment and offer of just compensation.* Before the initiation of negotiations, the Agency shall establish an amount which it believes is just compensation for the real property. The amount shall not be less than the approved appraisal of the fair market value of the property, taking into account the value of allowable damages or benefits to any remaining property. An Agency official must establish the amount believed to be just compensation. (*See* § 24.104.) Promptly thereafter, the Agency shall make a written offer to the owner to acquire the property for the full amount believed to be just compensation. (*See* appendix A, § 24.102(d).)

(e) *Summary statement.* Along with the initial written purchase offer, the owner shall be given a written statement of the basis for the offer of just compensation, which shall include:

(1) A statement of the amount offered as just compensation. In the case of a partial acquisition, the compensation for the real property to be acquired and the compensation for damages, if any, to the remaining real property shall be separately stated.

(2) A description and location identification of the real property and the interest in the real property to be acquired.

(3) An identification of the buildings, structures, and other improvements (including removable building equipment and trade fixtures) which are included as part of the offer of just compensation. Where appropriate, the statement shall identify any other separately held ownership interest in the property, *e.g.*, a tenant-owned improvement, and indicate that such interest is not covered by this offer.

(f) *Basic negotiation procedures.* The Agency shall make all reasonable efforts to contact the owner or the owner's representative and discuss its offer to purchase the property, including the basis for the offer of just compensation and explain its acquisition policies and procedures, including its payment of incidental expenses in accordance with § 24.106. The owner shall be given reasonable opportunity to consider the offer and present material which the owner believes is relevant to determining the value of the property and to suggest modification in the proposed terms and conditions of the purchase. The Agency shall consider the owner's presentation. (*See* appendix A, § 24.102(f).)

(g) *Updating offer of just compensation.* If the information presented by the owner, or a material change in the character or condition of the property, indicates the need for new appraisal information, or if a significant delay has occurred since the time of the appraisal(s) of the property, the Agency shall have the appraisal(s) updated or obtain a new appraisal(s). If the latest appraisal information indicates that a

change in the purchase offer is warranted, the Agency shall promptly reestablish just compensation and offer that amount to the owner in writing.

(h) *Coercive action.* The Agency shall not advance the time of condemnation, or defer negotiations or condemnation or the deposit of funds with the court, or take any other coercive action in order to induce an agreement on the price to be paid for the property.

(i) *Administrative settlement.* The purchase price for the property may exceed the amount offered as just compensation when reasonable efforts to negotiate an agreement at that amount have failed and an authorized Agency official approves such administrative settlement as being reasonable, prudent, and in the public interest. When Federal funds pay for or participate in acquisition costs, a written justification shall be prepared, which states what available information, including trial risks, supports such a settlement. (*See* appendix A, § 24.102(i).)

(j) *Payment before taking possession.* Before requiring the owner to surrender possession of the real property, the Agency shall pay the agreed purchase price to the owner, or in the case of a condemnation, deposit with the court, for the benefit of the owner, an amount not less than the Agency's approved appraisal of the fair market value of such property, or the court award of compensation in the condemnation proceeding for the property. In exceptional circumstances, with the prior approval of the owner, the Agency may obtain a right-of-entry for construction purposes before making payment available to an owner. (*See* appendix A, § 24.102(j).)

(k) *Uneconomic remnant.* If the acquisition of only a portion of a property would leave the owner with an uneconomic remnant, the Agency shall offer to acquire the uneconomic remnant along with the portion of the property needed for the project. (*See* § 24.2(a)(27).)

(l) *Inverse condemnation.* If the Agency intends to acquire any interest in real property by exercise of the power of eminent domain, it shall institute formal condemnation proceedings and not intentionally make it necessary for the owner to institute legal proceedings to prove the fact of the taking of the real property.

(m) *Fair rental.* If the Agency permits a former owner or tenant to occupy the real property after acquisition for a short term, or a period subject to termination by the Agency on short notice, the rent shall not exceed the fair market rent for such occupancy. (*See* appendix A, § 24.102(m).)

(n) *Conflict of interest.* (1) The appraiser, review appraiser or person performing the waiver valuation shall not have any interest, direct or indirect, in the real property being valued for the Agency.

Compensation for making an appraisal or waiver valuation shall not be based on the amount of the valuation estimate.

(2) No person shall attempt to unduly influence or coerce an appraiser, review appraiser, or waiver valuation preparer regarding any valuation or other aspect of an appraisal, review or waiver valuation. Persons functioning as negotiators may not supervise or formally evaluate the performance of any appraiser or review appraiser performing appraisal or appraisal review work, except that, for a program or project receiving Federal financial assistance, the Federal funding Agency may waive this requirement if it determines it would create a hardship for the Agency.

(3) An appraiser, review appraiser, or waiver valuation preparer making an appraisal, appraisal review or waiver valuation may be authorized by the Agency to act as a negotiator for real property for which that person has made an appraisal, appraisal review or waiver valuation only if the offer to acquire the property is $10,000, or less. (*See* appendix A, § 24.102(n).)

[70 FR 611, Jan. 4, 2005, as amended at 70 FR 22611, May 2, 2005]

§ 24.103 Criteria for appraisals.

(a) *Appraisal requirements.* This section sets forth the requirements for real property acquisition appraisals for Federal and federally-assisted programs. Appraisals are to be prepared according to these requirements, which are intended to be consistent with the

Uniform Standards of Professional Appraisal Practice (USPAP).[1] (*See* appendix A, § 24.103(a).) The Agency may have appraisal requirements that supplement these requirements, including, to the extent appropriate, the Uniform Appraisal Standards for Federal Land Acquisition (UASFLA).[2]

(1) The Agency acquiring real property has a legitimate role in contributing to the appraisal process, especially in developing the scope of work and defining the appraisal problem. The scope of work and development of an appraisal under these requirements depends on the complexity of the appraisal problem.

(2) The Agency has the responsibility to assure that the appraisals it obtains are relevant to its program needs, reflect established and commonly accepted Federal and federally-assisted program appraisal practice, and as a minimum, complies with the definition of appraisal in § 24.2(a)(3) and the five following requirements: (*See* appendix A, §§ 24.103 and 24.103(a).)

(i) An adequate description of the physical characteristics of the property being appraised (and, in the case of a partial acquisition, an adequate description of the remaining property), including items identified as personal property, a statement of the known and observed encumbrances, if any, title information, location, zoning, present use, an analysis of highest and best use, and at least a 5-year sales history of the property. (*See* appendix A, § 24.103(a)(1).)

(ii) All relevant and reliable approaches to value consistent with established Federal and federally-assisted program appraisal practices. If the appraiser uses more than one approach, there shall be an analysis and reconciliation of approaches to value used that is sufficient to support the appraiser's opinion of value. (*See* appendix A, § 24.103(a).)

(iii) A description of comparable sales, including a description of all relevant physical, legal, and economic factors such as parties to the transaction, source and method of financing, and verification by a party involved in the transaction.

(iv) A statement of the value of the real property to be acquired and, for a partial acquisition, a statement of the value of the damages and benefits, if any, to the remaining real property, where appropriate.

(v) The effective date of valuation, date of appraisal, signature, and certification of the appraiser.

(b) *Influence of the project on just compensation.* The appraiser shall disregard any decrease or increase in the fair market value of the real property caused by the project for which the property is to be acquired, or by the likelihood that the property would be acquired for the project, other than that due to physical deterioration within the reasonable control of the owner. (*See* appendix A, § 24.103(b).)

(c) *Owner retention of improvements.* If the owner of a real property improvement is permitted to retain it for removal from the project site, the amount to be offered for the interest in the real property to be acquired shall be not less than the difference between the amount determined to be just compensation for the owner's entire interest in the real property and the salvage value (defined at § 24.2(a)(24)) of the retained improvement.

(d) *Qualifications of appraisers and review appraisers.* (1) The Agency shall establish criteria for determining the minimum qualifications and competency of appraisers and review appraisers. Qualifications shall be consistent with the scope of work for the assignment. The Agency shall review the experience, education, training, certification/licensing, designation(s)

[1] Uniform Standards of Professional Appraisal Practice (USPAP). Published by The Appraisal Foundation, a nonprofit educational organization. Copies may be ordered from The Appraisal Foundation at the following URL: *http://www.appraisalfoundation.org/htm/USPAP2004/toc.htm.*

[2] The ''Uniform Appraisal Standards for Federal Land Acquisitions'' is published by the Interagency Land Acquisition Conference. It is a compendium of Federal eminent domain appraisal law, both case and statute, regulations and practices. It is available at *http://www.usdoj.gov/enrd/landack/toc.htm* or in soft cover format from the Appraisal Institute at *http://www.appraisalinstitute.org/econom/publications/Default.asp* and select ''Legal/Regulatory'' or call 888–570–4545.

and other qualifications of appraisers, and review appraisers, and use only those determined by the Agency to be qualified. (*See* appendix A, § 24.103(d)(1).)

(2) If the Agency uses a contract (fee) appraiser to perform the appraisal, such appraiser shall be State licensed or certified in accordance with title XI of the Financial Institutions Reform, Recovery, and Enforcement Act of 1989 (FIRREA) (12 U.S.C. 3331 *et seq.*).

[70 FR 611, Jan. 4, 2005, as amended at 70 FR 22611, May 2, 2005]

§ 24.104 Review of appraisals.

The Agency shall have an appraisal review process and, at a minimum:

(a) A qualified review appraiser (*see* § 24.103(d)(1) and appendix A, § 24.104) shall examine the presentation and analysis of market information in all appraisals to assure that they meet the definition of appraisal found in 49 CFR 24.2(a)(3), appraisal requirements found in 49 CFR 24.103 and other applicable requirements, including, to the extent appropriate, the UASFLA, and support the appraiser's opinion of value. The level of review analysis depends on the complexity of the appraisal problem. As needed, the review appraiser shall, prior to acceptance, seek necessary corrections or revisions. The review appraiser shall identify each appraisal report as recommended (as the basis for the establishment of the amount believed to be just compensation), accepted (meets all requirements, but not selected as recommended or approved), or not accepted. If authorized by the Agency to do so, the staff review appraiser shall also approve the appraisal (as the basis for the establishment of the amount believed to be just compensation), and, if also authorized to do so, develop and report the amount believed to be just compensation. (*See* appendix A, § 24.104(a).)

(b) If the review appraiser is unable to recommend (or approve) an appraisal as an adequate basis for the establishment of the offer of just compensation, and it is determined by the acquiring Agency that it is not practical to obtain an additional appraisal, the review appraiser may, as part of the review, present and analyze market information in conformance with § 24.103 to support a recommended (or approved) value. (*See* appendix A, § 24.104(b).)

(c) The review appraiser shall prepare a written report that identifies the appraisal reports reviewed and documents the findings and conclusions arrived at during the review of the appraisal(s). Any damages or benefits to any remaining property shall be identified in the review appraiser's report. The review appraiser shall also prepare a signed certification that states the parameters of the review. The certification shall state the approved value, and, if the review appraiser is authorized to do so, the amount believed to be just compensation for the acquisition. (*See* appendix A, § 24.104(c).)

§ 24.105 Acquisition of tenant-owned improvements.

(a) *Acquisition of improvements.* When acquiring any interest in real property, the Agency shall offer to acquire at least an equal interest in all buildings, structures, or other improvements located upon the real property to be acquired, which it requires to be removed or which it determines will be adversely affected by the use to which such real property will be put. This shall include any improvement of a tenant-owner who has the right or obligation to remove the improvement at the expiration of the lease term.

(b) *Improvements considered to be real property.* Any building, structure, or other improvement, which would be considered to be real property if owned by the owner of the real property on which it is located, shall be considered to be real property for purposes of this subpart.

(c) *Appraisal and Establishment of Just Compensation for a Tenant-Owned Improvement.* Just compensation for a tenant-owned improvement is the amount which the improvement contributes to the fair market value of the whole property, or its salvage value, whichever is greater. (Salvage value is defined at § 24.2(a)(23).)

(d) *Special conditions for tenant-owned improvements.* No payment shall be made to a tenant-owner for any real property improvement unless:

(1) The tenant-owner, in consideration for the payment, assigns, transfers, and releases to the Agency all of the tenant-owner's right, title, and interest in the improvement;

(2) The owner of the real property on which the improvement is located disclaims all interest in the improvement; and

(3) The payment does not result in the duplication of any compensation otherwise authorized by law.

(e) *Alternative compensation.* Nothing in this subpart shall be construed to deprive the tenant-owner of any right to reject payment under this subpart and to obtain payment for such property interests in accordance with other applicable law.

[70 FR 611, Jan. 4, 2005, as amended at 70 FR 22611, May 2, 2005]

§ 24.106 Expenses incidental to transfer of title to the Agency.

(a) The owner of the real property shall be reimbursed for all reasonable expenses the owner necessarily incurred for:

(1) Recording fees, transfer taxes, documentary stamps, evidence of title, boundary surveys, legal descriptions of the real property, and similar expenses incidental to conveying the real property to the Agency. However, the Agency is not required to pay costs solely required to perfect the owner's title to the real property;

(2) Penalty costs and other charges for prepayment of any preexisting recorded mortgage entered into in good faith encumbering the real property; and

(3) The pro rata portion of any prepaid real property taxes which are allocable to the period after the Agency obtains title to the property or effective possession of it, whichever is earlier.

(b) Whenever feasible, the Agency shall pay these costs directly to the billing agent so that the owner will not have to pay such costs and then seek reimbursement from the Agency.

§ 24.107 Certain litigation expenses.

The owner of the real property shall be reimbursed for any reasonable expenses, including reasonable attorney, appraisal, and engineering fees, which the owner actually incurred because of a condemnation proceeding, if:

(a) The final judgment of the court is that the Agency cannot acquire the real property by condemnation;

(b) The condemnation proceeding is abandoned by the Agency other than under an agreed-upon settlement; or

(c) The court having jurisdiction renders a judgment in favor of the owner in an inverse condemnation proceeding or the Agency effects a settlement of such proceeding.

§ 24.108 Donations.

An owner whose real property is being acquired may, after being fully informed by the Agency of the right to receive just compensation for such property, donate such property or any part thereof, any interest therein, or any compensation paid therefore, to the Agency as such owner shall determine. The Agency is responsible for ensuring that an appraisal of the real property is obtained unless the owner releases the Agency from such obligation, except as provided in § 24.102(c)(2).

Subpart C—General Relocation Requirements

§ 24.201 Purpose.

This subpart prescribes general requirements governing the provision of relocation payments and other relocation assistance in this part.

§ 24.202 Applicability.

These requirements apply to the relocation of any displaced person as defined at § 24.2(a)(9). Any person who qualifies as a displaced person must be fully informed of his or her rights and entitlements to relocation assistance and payments provided by the Uniform Act and this regulation. (*See* appendix A, § 24.202.)

§ 24.203 Relocation notices.

(a) *General information notice.* As soon as feasible, a person scheduled to be displaced shall be furnished with a general written description of the displacing Agency's relocation program which does at least the following:

(1) Informs the person that he or she may be displaced for the project and

generally describes the relocation payment(s) for which the person may be eligible, the basic conditions of eligibility, and the procedures for obtaining the payment(s);

(2) Informs the displaced person that he or she will be given reasonable relocation advisory services, including referrals to replacement properties, help in filing payment claims, and other necessary assistance to help the displaced person successfully relocate;

(3) Informs the displaced person that he or she will not be required to move without at least 90 days advance written notice (see paragraph (c) of this section), and informs any person to be displaced from a dwelling that he or she cannot be required to move permanently unless at least one comparable replacement dwelling has been made available;

(4) Informs the displaced person that any person who is an alien not lawfully present in the United States is ineligible for relocation advisory services and relocation payments, unless such ineligibility would result in exceptional and extremely unusual hardship to a qualifying spouse, parent, or child, as defined in §24.208(h); and

(5) Describes the displaced person's right to appeal the Agency's determination as to a person's application for assistance for which a person may be eligible under this part.

(b) *Notice of relocation eligibility.* Eligibility for relocation assistance shall begin on the date of a notice of intent to acquire (described in §24.203(d)), the initiation of negotiations (defined in §24.2(a)(15)), or actual acquisition, whichever occurs first. When this occurs, the Agency shall promptly notify all occupants in writing of their eligibility for applicable relocation assistance.

(c) *Ninety-day notice*—(1) *General.* No lawful occupant shall be required to move unless he or she has received at least 90 days advance written notice of the earliest date by which he or she may be required to move.

(2) *Timing of notice.* The displacing Agency may issue the notice 90 days or earlier before it expects the person to be displaced.

(3) *Content of notice.* The 90-day notice shall either state a specific date as the earliest date by which the occupant may be required to move, or state that the occupant will receive a further notice indicating, at least 30 days in advance, the specific date by which he or she must move. If the 90-day notice is issued before a comparable replacement dwelling is made available, the notice must state clearly that the occupant will not have to move earlier than 90 days after such a dwelling is made available. (*See* §24.204(a).)

(4) *Urgent need.* In unusual circumstances, an occupant may be required to vacate the property on less than 90 days advance written notice if the displacing Agency determines that a 90-day notice is impracticable, such as when the person's continued occupancy of the property would constitute a substantial danger to health or safety. A copy of the Agency's determination shall be included in the applicable case file.

(d) *Notice of intent to acquire.* A notice of intent to acquire is a displacing Agency's written communication that is provided to a person to be displaced, including those to be displaced by rehabilitation or demolition activities from property acquired prior to the commitment of Federal financial assistance to the activity, which clearly sets forth that the Agency intends to acquire the property. A notice of intent to acquire establishes eligibility for relocation assistance prior to the initiation of negotiations and/or prior to the commitment of Federal financial assistance. (*See* §24.2(a)(9)(i)(A).)

§24.204 Availability of comparable replacement dwelling before displacement.

(a) *General.* No person to be displaced shall be required to move from his or her dwelling unless at least one comparable replacement dwelling (defined at §24.2 (a)(6)) has been made available to the person. When possible, three or more comparable replacement dwellings shall be made available. A comparable replacement dwelling will be considered to have been made available to a person, if:

(1) The person is informed of its location;

(2) The person has sufficient time to negotiate and enter into a purchase

agreement or lease for the property; and

(3) Subject to reasonable safeguards, the person is assured of receiving the relocation assistance and acquisition payment to which the person is entitled in sufficient time to complete the purchase or lease of the property.

(b) *Circumstances permitting waiver.* The Federal Agency funding the project may grant a waiver of the policy in paragraph (a) of this section in any case where it is demonstrated that a person must move because of:

(1) A major disaster as defined in section 102 of the Robert T. Stafford Disaster Relief and Emergency Assistance Act, as amended (42 U.S.C. 5122);

(2) A presidentially declared national emergency; or

(3) Another emergency which requires immediate vacation of the real property, such as when continued occupancy of the displacement dwelling constitutes a substantial danger to the health or safety of the occupants or the public.

(c) *Basic conditions of emergency move.* Whenever a person to be displaced is required to relocate from the displacement dwelling for a temporary period because of an emergency as described in paragraph (b) of this section, the Agency shall:

(1) Take whatever steps are necessary to assure that the person is temporarily relocated to a decent, safe, and sanitary dwelling;

(2) Pay the actual reasonable out-of-pocket moving expenses and any reasonable increase in rent and utility costs incurred in connection with the temporary relocation; and

(3) Make available to the displaced person as soon as feasible, at least one comparable replacement dwelling. (For purposes of filing a claim and meeting the eligibility requirements for a relocation payment, the date of displacement is the date the person moves from the temporarily occupied dwelling.)

§ 24.205 Relocation planning, advisory services, and coordination.

(a) *Relocation planning.* During the early stages of development, an Agency shall plan Federal and federally-assisted programs or projects in such a manner that recognizes the problems associated with the displacement of individuals, families, businesses, farms, and nonprofit organizations and develop solutions to minimize the adverse impacts of displacement. Such planning, where appropriate, shall precede any action by an Agency which will cause displacement, and should be scoped to the complexity and nature of the anticipated displacing activity including an evaluation of program resources available to carry out timely and orderly relocations. Planning may involve a relocation survey or study, which may include the following:

(1) An estimate of the number of households to be displaced including information such as owner/tenant status, estimated value and rental rates of properties to be acquired, family characteristics, and special consideration of the impacts on minorities, the elderly, large families, and persons with disabilities when applicable.

(2) An estimate of the number of comparable replacement dwellings in the area (including price ranges and rental rates) that are expected to be available to fulfill the needs of those households displaced. When an adequate supply of comparable housing is not expected to be available, the Agency should consider housing of last resort actions.

(3) An estimate of the number, type and size of the businesses, farms, and nonprofit organizations to be displaced and the approximate number of employees that may be affected.

(4) An estimate of the availability of replacement business sites. When an adequate supply of replacement business sites is not expected to be available, the impacts of displacing the businesses should be considered and addressed. Planning for displaced businesses which are reasonably expected to involve complex or lengthy moving processes or small businesses with limited financial resources and/or few alternative relocation sites should include an analysis of business moving problems.

(5) Consideration of any special relocation advisory services that may be necessary from the displacing Agency and other cooperating Agencies.

(b) *Loans for planning and preliminary expenses.* In the event that an Agency

elects to consider using the duplicative provision in section 215 of the Uniform Act which permits the use of project funds for loans to cover planning and other preliminary expenses for the development of additional housing, the Lead Agency will establish criteria and procedures for such use upon the request of the Federal Agency funding the program or project.

(c) *Relocation assistance advisory services*—(1) *General.* The Agency shall carry out a relocation assistance advisory program which satisfies the requirements of Title VI of the Civil Rights Act of 1964 (42 U.S.C. 2000d *et seq.*), Title VIII of the Civil Rights Act of 1968 (42 U.S.C. 3601 *et seq.*), and Executive Order 11063 (27 FR 11527, November 24, 1962), and offer the services described in paragraph (c)(2) of this section. If the Agency determines that a person occupying property adjacent to the real property acquired for the project is caused substantial economic injury because of such acquisition, it may offer advisory services to such person.

(2) *Services to be provided.* The advisory program shall include such measures, facilities, and services as may be necessary or appropriate in order to:

(i) Determine, for nonresidential (businesses, farm and nonprofit organizations) displacements, the relocation needs and preferences of each business (farm and nonprofit organization) to be displaced and explain the relocation payments and other assistance for which the business may be eligible, the related eligibility requirements, and the procedures for obtaining such assistance. This shall include a personal interview with each business. At a minimum, interviews with displaced business owners and operators should include the following items:

(A) The business's replacement site requirements, current lease terms and other contractual obligations and the financial capacity of the business to accomplish the move.

(B) Determination of the need for outside specialists in accordance with §24.301(g)(12) that will be required to assist in planning the move, assistance in the actual move, and in the reinstallation of machinery and/or other personal property.

(C) For businesses, an identification and resolution of personalty/realty issues. Every effort must be made to identify and resolve realty/personalty issues prior to, or at the time of, the appraisal of the property.

(D) An estimate of the time required for the business to vacate the site.

(E) An estimate of the anticipated difficulty in locating a replacement property.

(F) An identification of any advance relocation payments required for the move, and the Agency's legal capacity to provide them.

(ii) Determine, for residential displacements, the relocation needs and preferences of each person to be displaced and explain the relocation payments and other assistance for which the person may be eligible, the related eligibility requirements, and the procedures for obtaining such assistance. This shall include a personal interview with each residential displaced person.

(A) Provide current and continuing information on the availability, purchase prices, and rental costs of comparable replacement dwellings, and explain that the person cannot be required to move unless at least one comparable replacement dwelling is made available as set forth in §24.204(a).

(B) As soon as feasible, the Agency shall inform the person in writing of the specific comparable replacement dwelling and the price or rent used for establishing the upper limit of the replacement housing payment (*see* §24.403 (a) and (b)) and the basis for the determination, so that the person is aware of the maximum replacement housing payment for which he or she may qualify.

(C) Where feasible, housing shall be inspected prior to being made available to assure that it meets applicable standards. (*See* §24.2(a)(8).) If such an inspection is not made, the Agency shall notify the person to be displaced that a replacement housing payment may not be made unless the replacement dwelling is subsequently inspected and determined to be decent, safe, and sanitary.

(D) Whenever possible, minority persons shall be given reasonable opportunities to relocate to decent, safe, and

sanitary replacement dwellings, not located in an area of minority concentration, that are within their financial means. This policy, however, does not require an Agency to provide a person a larger payment than is necessary to enable a person to relocate to a comparable replacement dwelling. (*See* appendix A, § 24.205(c)(2)(ii)(D).)

(E) The Agency shall offer all persons transportation to inspect housing to which they are referred.

(F) Any displaced person that may be eligible for government housing assistance at the replacement dwelling shall be advised of any requirements of such government housing assistance program that would limit the size of the replacement dwelling (*see* § 24.2(a)(6)(ix)), as well as of the long term nature of such rent subsidy, and the limited (42 month) duration of the relocation rental assistance payment.

(iii) Provide, for nonresidential moves, current and continuing information on the availability, purchase prices, and rental costs of suitable commercial and farm properties and locations. Assist any person displaced from a business or farm operation to obtain and become established in a suitable replacement location.

(iv) Minimize hardships to persons in adjusting to relocation by providing counseling, advice as to other sources of assistance that may be available, and such other help as may be appropriate.

(v) Supply persons to be displaced with appropriate information concerning Federal and State housing programs, disaster loan and other programs administered by the Small Business Administration, and other Federal and State programs offering assistance to displaced persons, and technical help to persons applying for such assistance.

(d) *Coordination of relocation activities.* Relocation activities shall be coordinated with project work and other displacement-causing activities to ensure that, to the extent feasible, persons displaced receive consistent treatment and the duplication of functions is minimized. (*See* § 24.6.)

(e) Any person who occupies property acquired by an Agency, when such occupancy began subsequent to the acquisition of the property, and the occupancy is permitted by a short term rental agreement or an agreement subject to termination when the property is needed for a program or project, shall be eligible for advisory services, as determined by the Agency.

§ 24.206 Eviction for cause.

(a) Eviction for cause must conform to applicable State and local law. Any person who occupies the real property and is not in unlawful occupancy on the date of the initiation of negotiations, is presumed to be entitled to relocation payments and other assistance set forth in this part unless the Agency determines that:

(1) The person received an eviction notice prior to the initiation of negotiations and, as a result of that notice is later evicted; or

(2) The person is evicted after the initiation of negotiations for serious or repeated violation of material terms of the lease or occupancy agreement; and

(3) In either case the eviction was not undertaken for the purpose of evading the obligation to make available the payments and other assistance set forth in this part.

(b) For purposes of determining eligibility for relocation payments, the date of displacement is the date the person moves, or if later, the date a comparable replacement dwelling is made available. This section applies only to persons who would otherwise have been displaced by the project. (*See* appendix A, § 24.206.)

§ 24.207 General requirements—claims for relocation payments.

(a) *Documentation.* Any claim for a relocation payment shall be supported by such documentation as may be reasonably required to support expenses incurred, such as bills, certified prices, appraisals, or other evidence of such expenses. A displaced person must be provided reasonable assistance necessary to complete and file any required claim for payment.

(b) *Expeditious payments.* The Agency shall review claims in an expeditious manner. The claimant shall be promptly notified as to any additional documentation that is required to support the claim. Payment for a claim shall be made as soon as feasible following

receipt of sufficient documentation to support the claim.

(c) *Advanced payments.* If a person demonstrates the need for an advanced relocation payment in order to avoid or reduce a hardship, the Agency shall issue the payment, subject to such safeguards as are appropriate to ensure that the objective of the payment is accomplished.

(d) *Time for filing.* (1) All claims for a relocation payment shall be filed with the Agency no later than 18 months after:

(i) For tenants, the date of displacement.

(ii) For owners, the date of displacement or the date of the final payment for the acquisition of the real property, whichever is later.

(2) The Agency shall waive this time period for good cause.

(e) *Notice of denial of claim.* If the Agency disapproves all or part of a payment claimed or refuses to consider the claim on its merits because of untimely filing or other grounds, it shall promptly notify the claimant in writing of its determination, the basis for its determination, and the procedures for appealing that determination.

(f) *No waiver of relocation assistance.* A displacing Agency shall not propose or request that a displaced person waive his or her rights or entitlements to relocation assistance and benefits provided by the Uniform Act and this regulation.

(g) *Expenditure of payments.* Payments, provided pursuant to this part, shall not be considered to constitute Federal financial assistance. Accordingly, this part does not apply to the expenditure of such payments by, or for, a displaced person.

§ 24.208 Aliens not lawfully present in the United States.

(a) Each person seeking relocation payments or relocation advisory assistance shall, as a condition of eligibility, certify:

(1) In the case of an individual, that he or she is either a citizen or national of the United States, or an alien who is lawfully present in the United States.

(2) In the case of a family, that each family member is either a citizen or national of the United States, or an alien who is lawfully present in the United States. The certification may be made by the head of the household on behalf of other family members.

(3) In the case of an unincorporated business, farm, or nonprofit organization, that each owner is either a citizen or national of the United States, or an alien who is lawfully present in the United States. The certification may be made by the principal owner, manager, or operating officer on behalf of other persons with an ownership interest.

(4) In the case of an incorporated business, farm, or nonprofit organization, that the corporation is authorized to conduct business within the United States.

(b) The certification provided pursuant to paragraphs (a)(1), (a)(2), and (a)(3) of this section shall indicate whether such person is either a citizen or national of the United States, or an alien who is lawfully present in the United States. Requirements concerning the certification in addition to those contained in this rule shall be within the discretion of the Federal funding Agency and, within those parameters, that of the displacing Agency.

(c) In computing relocation payments under the Uniform Act, if any member(s) of a household or owner(s) of an unincorporated business, farm, or nonprofit organization is (are) determined to be ineligible because of a failure to be legally present in the United States, no relocation payments may be made to him or her. Any payment(s) for which such household, unincorporated business, farm, or nonprofit organization would otherwise be eligible shall be computed for the household, based on the number of eligible household members and for the unincorporated business, farm, or nonprofit organization, based on the ratio of ownership between eligible and ineligible owners.

(d) The displacing Agency shall consider the certification provided pursuant to paragraph (a) of this section to be valid, unless the displacing Agency determines in accordance with paragraph (f) of this section that it is invalid based on a review of an alien's documentation or other information

that the Agency considers reliable and appropriate.

(e) Any review by the displacing Agency of the certifications provided pursuant to paragraph (a) of this section shall be conducted in a nondiscriminatory fashion. Each displacing Agency will apply the same standard of review to all such certifications it receives, except that such standard may be revised periodically.

(f) If, based on a review of an alien's documentation or other credible evidence, a displacing Agency has reason to believe that a person's certification is invalid (for example a document reviewed does not on its face reasonably appear to be genuine), and that, as a result, such person may be an alien not lawfully present in the United States, it shall obtain the following information before making a final determination:

(1) If the Agency has reason to believe that the certification of a person who has certified that he or she is an alien lawfully present in the United States is invalid, the displacing Agency shall obtain verification of the alien's status from the local Bureau of Citizenship and Immigration Service (BCIS) Office. A list of local BCIS offices is available at *http://www.uscis.gov/graphics/fieldoffices/alphaa.htm*. Any request for BCIS verification shall include the alien's full name, date of birth and alien number, and a copy of the alien's documentation. (If an Agency is unable to contact the BCIS, it may contact the FHWA in Washington, DC, Office of Real Estate Services or Office of Chief Counsel for a referral to the BCIS.)

(2) If the Agency has reason to believe that the certification of a person who has certified that he or she is a citizen or national is invalid, the displacing Agency shall request evidence of United States citizenship or nationality from such person and, if considered necessary, verify the accuracy of such evidence with the issuer.

(g) No relocation payments or relocation advisory assistance shall be provided to a person who has not provided the certification described in this section or who has been determined to be not lawfully present in the United States, unless such person can demonstrate to the displacing Agency's satisfaction that the denial of relocation assistance will result in an exceptional and extremely unusual hardship to such person's spouse, parent, or child who is a citizen of the United States, or is an alien lawfully admitted for permanent residence in the United States.

(h) For purposes of paragraph (g) of this section, ''exceptional and extremely unusual hardship'' to such spouse, parent, or child of the person not lawfully present in the United States means that the denial of relocation payments and advisory assistance to such person will directly result in:

(1) A significant and demonstrable adverse impact on the health or safety of such spouse, parent, or child;

(2) A significant and demonstrable adverse impact on the continued existence of the family unit of which such spouse, parent, or child is a member; or

(3) Any other impact that the displacing Agency determines will have a significant and demonstrable adverse impact on such spouse, parent, or child.

(i) The certification referred to in paragraph (a) of this section may be included as part of the claim for relocation payments described in § 24.207 of this part.

(Approved by the Office of Management and Budget under control number 2105–0508.)

§ 24.209 Relocation payments not considered as income.

No relocation payment received by a displaced person under this part shall be considered as income for the purpose of the Internal Revenue Code of 1954, which has been redesignated as the Internal Revenue Code of 1986 (Title 26, U.S. Code), or for the purpose of determining the eligibility or the extent of eligibility of any person for assistance under the Social Security Act (42 U.S. Code 301 *et seq.*) or any other Federal law, except for any Federal law providing low-income housing assistance.

Subpart D—Payments for Moving and Related Expenses

§ 24.301 Payment for actual reasonable moving and related expenses.

(a) *General.* (1) Any owner-occupant or tenant who qualifies as a displaced person (defined at § 24.2(a)(9)) and who moves from a dwelling (including a mobile home) or who moves from a business, farm or nonprofit organization is entitled to payment of his or her actual moving and related expenses, as the Agency determines to be reasonable and necessary.

(2) A non-occupant owner of a rented mobile home is eligible for actual cost reimbursement under § 24.301 to relocate the mobile home. If the mobile home is not acquired as real estate, but the homeowner-occupant obtains a replacement housing payment under one of the circumstances described at § 24.502(a)(3), the home-owner occupant is not eligible for payment for moving the mobile home, but may be eligible for a payment for moving personal property from the mobile home.

(b) *Moves from a dwelling.* A displaced person's actual, reasonable and necessary moving expenses for moving personal property from a dwelling may be determined based on the cost of one, or a combination of the following methods: (Eligible expenses for moves from a dwelling include the expenses described in paragraphs (g)(1) through (g)(7) of this section. Self-moves based on the lower of two bids or estimates are not eligible for reimbursement under this section.)

(1) *Commercial move*—moves performed by a professional mover.

(2) *Self-move*—moves that may be performed by the displaced person in one or a combination of the following methods:

(i) *Fixed Residential Moving Cost Schedule.* (Described in § 24.302.)

(ii) *Actual cost move.* Supported by receipted bills for labor and equipment. Hourly labor rates should not exceed the cost paid by a commercial mover. Equipment rental fees should be based on the actual cost of renting the equipment but not exceed the cost paid by a commercial mover.

(c) *Moves from a mobile home.* A displaced person's actual, reasonable and necessary moving expenses for moving personal property from a mobile home may be determined based on the cost of one, or a combination of the following methods: (self-moves based on the lower of two bids or estimates are not eligible for reimbursement under this section. Eligible expenses for moves from a mobile home include those expenses described in paragraphs (g)(1) through (g)(7) of this section. In addition to the items in paragraph (a) of this section, the owner-occupant of a mobile home that is moved as personal property and used as the person's replacement dwelling, is also eligible for the moving expenses described in paragraphs (g)(8) through (g)(10) of this section.)

(1) *Commercial move*—moves performed by a professional mover.

(2) *Self-move*—moves that may be performed by the displaced person in one or a combination of the following methods:

(i) *Fixed Residential Moving Cost Schedule.* (Described in § 24.302.)

(ii) *Actual cost move.* Supported by receipted bills for labor and equipment. Hourly labor rates should not exceed the cost paid by a commercial mover. Equipment rental fees should be based on the actual cost of renting the equipment but not exceed the cost paid by a commercial mover.

(d) *Moves from a business, farm or nonprofit organization.* Personal property as determined by an inventory from a business, farm or nonprofit organization may be moved by one or a combination of the following methods: (Eligible expenses for moves from a business, farm or nonprofit organization include those expenses described in paragraphs (g)(1) through (g)(7) of this section and paragraphs (g)(11) through (g)(18) of this section and § 24.303.)

(1) *Commercial move.* Based on the lower of two bids or estimates prepared by a commercial mover. At the Agency's discretion, payment for a low cost or uncomplicated move may be based on a single bid or estimate.

(2) *Self-move.* A self-move payment may be based on one or a combination of the following:

(i) The lower of two bids or estimates prepared by a commercial mover or qualified Agency staff person. At the

Agency's discretion, payment for a low cost or uncomplicated move may be based on a single bid or estimate; or

(ii) Supported by receipted bills for labor and equipment. Hourly labor rates should not exceed the rates paid by a commercial mover to employees performing the same activity and, equipment rental fees should be based on the actual rental cost of the equipment but not to exceed the cost paid by a commercial mover.

(e) *Personal property only.* Eligible expenses for a person who is required to move personal property from real property but is not required to move from a dwelling (including a mobile home), business, farm or nonprofit organization include those expenses described in paragraphs (g)(1) through (g)(7) and (g)(18) of this section. (See appendix A, § 24.301(e).)

(f) *Advertising signs.* The amount of a payment for direct loss of an advertising sign, which is personal property shall be the lesser of:

(1) The depreciated reproduction cost of the sign, as determined by the Agency, less the proceeds from its sale; or

(2) The estimated cost of moving the sign, but with no allowance for storage.

(g) *Eligible actual moving expenses.* (1) Transportation of the displaced person and personal property. Transportation costs for a distance beyond 50 miles are not eligible, unless the Agency determines that relocation beyond 50 miles is justified.

(2) Packing, crating, unpacking, and uncrating of the personal property.

(3) Disconnecting, dismantling, removing, reassembling, and reinstalling relocated household appliances and other personal property. For businesses, farms or nonprofit organizations this includes machinery, equipment, substitute personal property, and connections to utilities available within the building; it also includes modifications to the personal property, including those mandated by Federal, State or local law, code or ordinance, necessary to adapt it to the replacement structure, the replacement site, or the utilities at the replacement site, and modifications necessary to adapt the utilities at the replacement site to the personal property.

(4) Storage of the personal property for a period not to exceed 12 months, unless the Agency determines that a longer period is necessary.

(5) Insurance for the replacement value of the property in connection with the move and necessary storage.

(6) The replacement value of property lost, stolen, or damaged in the process of moving (not through the fault or negligence of the displaced person, his or her agent, or employee) where insurance covering such loss, theft, or damage is not reasonably available.

(7) Other moving-related expenses that are not listed as ineligible under § 24.301(h), as the Agency determines to be reasonable and necessary.

(8) The reasonable cost of disassembling, moving, and reassembling any appurtenances attached to a mobile home, such as porches, decks, skirting, and awnings, which were not acquired, anchoring of the unit, and utility ''hookup'' charges.

(9) The reasonable cost of repairs and/or modifications so that a mobile home can be moved and/or made decent, safe, and sanitary.

(10) The cost of a nonrefundable mobile home park entrance fee, to the extent it does not exceed the fee at a comparable mobile home park, if the person is displaced from a mobile home park or the Agency determines that payment of the fee is necessary to effect relocation.

(11) Any license, permit, fees or certification required of the displaced person at the replacement location. However, the payment may be based on the remaining useful life of the existing license, permit, fees or certification.

(12) Professional services as the Agency determines to be actual, reasonable and necessary for:

(i) Planning the move of the personal property;

(ii) Moving the personal property; and

(iii) Installing the relocated personal property at the replacement location.

(13) Relettering signs and replacing stationery on hand at the time of displacement that are made obsolete as a result of the move.

(14) Actual direct loss of tangible personal property incurred as a result of moving or discontinuing the business

or farm operation. The payment shall consist of the lesser of:

(i) The fair market value in place of the item, as is for continued use, less the proceeds from its sale. (To be eligible for payment, the claimant must make a good faith effort to sell the personal property, unless the Agency determines that such effort is not necessary. When payment for property loss is claimed for goods held for sale, the fair market value shall be based on the cost of the goods to the business, not the potential selling prices.); or

(ii) The estimated cost of moving the item as is, but not including any allowance for storage; or for reconnecting a piece of equipment if the equipment is in storage or not being used at the acquired site. (See appendix A, §24.301(g)(14)(i) and (ii).) If the business or farm operation is discontinued, the estimated cost of moving the item shall be based on a moving distance of 50 miles.

(15) The reasonable cost incurred in attempting to sell an item that is not to be relocated.

(16) *Purchase of substitute personal property*. If an item of personal property, which is used as part of a business or farm operation is not moved but is promptly replaced with a substitute item that performs a comparable function at the replacement site, the displaced person is entitled to payment of the lesser of:

(i) The cost of the substitute item, including installation costs of the replacement site, minus any proceeds from the sale or trade-in of the replaced item; or

(ii) The estimated cost of moving and reinstalling the replaced item but with no allowance for storage. At the Agency's discretion, the estimated cost for a low cost or uncomplicated move may be based on a single bid or estimate.

(17) Searching for a replacement location. A business or farm operation is entitled to reimbursement for actual expenses, not to exceed $2,500, as the Agency determines to be reasonable, which are incurred in searching for a replacement location, including:

(i) Transportation;

(ii) Meals and lodging away from home;

(iii) Time spent searching, based on reasonable salary or earnings;

(iv) Fees paid to a real estate agent or broker to locate a replacement site, exclusive of any fees or commissions related to the purchase of such sites;

(v) Time spent in obtaining permits and attending zoning hearings; and

(vi) Time spent negotiating the purchase of a replacement site based on a reasonable salary or earnings.

(18) *Low value/high bulk*. When the personal property to be moved is of low value and high bulk, and the cost of moving the property would be disproportionate to its value in the judgment of the displacing Agency, the allowable moving cost payment shall not exceed the lesser of: The amount which would be received if the property were sold at the site or the replacement cost of a comparable quantity delivered to the new business location. Examples of personal property covered by this provision include, but are not limited to, stockpiled sand, gravel, minerals, metals and other similar items of personal property as determined by the Agency.

(h) *Ineligible moving and related expenses*. A displaced person is not entitled to payment for:

(1) The cost of moving any structure or other real property improvement in which the displaced person reserved ownership. (However, this part does not preclude the computation under §24.401(c)(2)(iii));

(2) Interest on a loan to cover moving expenses;

(3) Loss of goodwill;

(4) Loss of profits;

(5) Loss of trained employees;

(6) Any additional operating expenses of a business or farm operation incurred because of operating in a new location except as provided in §24.304(a)(6);

(7) Personal injury;

(8) Any legal fee or other cost for preparing a claim for a relocation payment or for representing the claimant before the Agency;

(9) Expenses for searching for a replacement dwelling;

(10) Physical changes to the real property at the replacement location of a business or farm operation except as provided in §§24.301(g)(3) and 24.304(a);

(11) Costs for storage of personal property on real property already owned or leased by the displaced person, and

(12) Refundable security and utility deposits.

(i) *Notification and inspection (nonresidential).* The Agency shall inform the displaced person, in writing, of the requirements of this section as soon as possible after the initiation of negotiations. This information may be included in the relocation information provided the displaced person as set forth in § 24.203. To be eligible for payments under this section the displaced person must:

(1) Provide the Agency reasonable advance notice of the approximate date of the start of the move or disposition of the personal property and an inventory of the items to be moved. However, the Agency may waive this notice requirement after documenting its file accordingly.

(2) Permit the Agency to make reasonable and timely inspections of the personal property at both the displacement and replacement sites and to monitor the move.

(j) *Transfer of ownership (nonresidential).* Upon request and in accordance with applicable law, the claimant shall transfer to the Agency ownership of any personal property that has not been moved, sold, or traded in.

[70 FR 611, Jan. 4, 2005, as amended at 70 FR 22611, May 2, 2005]

§ 24.302 Fixed payment for moving expenses—residential moves.

Any person displaced from a dwelling or a seasonal residence or a dormitory style room is entitled to receive a fixed moving cost payment as an alternative to a payment for actual moving and related expenses under § 24.301. This payment shall be determined according to the Fixed Residential Moving Cost Schedule[3] approved by the Federal Highway Administration and published in the FEDERAL REGISTER on a periodic basis. The payment to a person with minimal personal possessions who is in occupancy of a dormitory style room or a person whose residential move is performed by an Agency at no cost to the person shall be limited to the amount stated in the most recent edition of the Fixed Residential Moving Cost Schedule.

§ 24.303 Related nonresidential eligible expenses.

The following expenses, in addition to those provided by § 24.301 for moving personal property, shall be provided if the Agency determines that they are actual, reasonable and necessary:

(a) Connection to available nearby utilities from the right-of-way to improvements at the replacement site.

(b) Professional services performed prior to the purchase or lease of a replacement site to determine its suitability for the displaced person's business operation including but not limited to, soil testing, feasibility and marketing studies (excluding any fees or commissions directly related to the purchase or lease of such site). At the discretion of the Agency a reasonable pre-approved hourly rate may be established. (See appendix A, § 24.303(b).)

(c) Impact fees or one time assessments for anticipated heavy utility usage, as determined necessary by the Agency.

§ 24.304 Reestablishment expenses—nonresidential moves.

In addition to the payments available under §§ 24.301 and 24.303 of this subpart, a small business, as defined in § 24.2(a)(24), farm or nonprofit organization is entitled to receive a payment, not to exceed $10,000, for expenses actually incurred in relocating and reestablishing such small business, farm or nonprofit organization at a replacement site.

(a) *Eligible expenses.* Reestablishment expenses must be reasonable and necessary, as determined by the Agency. They include, but are not limited to, the following:

(1) Repairs or improvements to the replacement real property as required by Federal, State or local law, code or ordinance.

(2) Modifications to the replacement property to accommodate the business

[3] The Fixed Residential Moving Cost Schedule is available at the following URL: *http://www.fhwa.dot.gov/////realestate/fixsch96.htm.* Agencies are cautioned to ensure they are using the most recent edition.

operation or make replacement structures suitable for conducting the business.

(3) Construction and installation costs for exterior signing to advertise the business.

(4) Redecoration or replacement of soiled or worn surfaces at the replacement site, such as paint, paneling, or carpeting.

(5) Advertisement of replacement location.

(6) Estimated increased costs of operation during the first 2 years at the replacement site for such items as:

(i) Lease or rental charges;

(ii) Personal or real property taxes;

(iii) Insurance premiums; and

(iv) Utility charges, excluding impact fees.

(7) Other items that the Agency considers essential to the reestablishment of the business.

(b) *Ineligible expenses.* The following is a nonexclusive listing of reestablishment expenditures not considered to be reasonable, necessary, or otherwise eligible:

(1) Purchase of capital assets, such as, office furniture, filing cabinets, machinery, or trade fixtures.

(2) Purchase of manufacturing materials, production supplies, product inventory, or other items used in the normal course of the business operation.

(3) Interest on money borrowed to make the move or purchase the replacement property.

(4) Payment to a part-time business in the home which does not contribute materially (defined at §24.2(a)(7)) to the household income.

§ 24.305 Fixed payment for moving expenses—nonresidential moves.

(a) *Business.* A displaced business may be eligible to choose a fixed payment in lieu of the payments for actual moving and related expenses, and actual reasonable reestablishment expenses provided by §§24.301, 24.303 and 24.304. Such fixed payment, except for payment to a nonprofit organization, shall equal the average annual net earnings of the business, as computed in accordance with paragraph (e) of this section, but not less than $1,000 nor more than $20,000. The displaced business is eligible for the payment if the Agency determines that:

(1) The business owns or rents personal property which must be moved in connection with such displacement and for which an expense would be incurred in such move and, the business vacates or relocates from its displacement site;

(2) The business cannot be relocated without a substantial loss of its existing patronage (clientele or net earnings). A business is assumed to meet this test unless the Agency determines that it will not suffer a substantial loss of its existing patronage;

(3) The business is not part of a commercial enterprise having more than three other entities which are not being acquired by the Agency, and which are under the same ownership and engaged in the same or similar business activities.

(4) The business is not operated at a displacement dwelling solely for the purpose of renting such dwelling to others;

(5) The business is not operated at the displacement site solely for the purpose of renting the site to others; and

(6) The business contributed materially to the income of the displaced person during the 2 taxable years prior to displacement. (See §24.2(a)(7).)

(b) *Determining the number of businesses.* In determining whether two or more displaced legal entities constitute a single business, which is entitled to only one fixed payment, all pertinent factors shall be considered, including the extent to which:

(1) The same premises and equipment are shared;

(2) Substantially identical or interrelated business functions are carried out and business and financial affairs are commingled;

(3) The entities are held out to the public, and to those customarily dealing with them, as one business; and

(4) The same person or closely related persons own, control, or manage the affairs of the entities.

(c) *Farm operation.* A displaced farm operation (defined at §24.2(a)(12)) may choose a fixed payment, in lieu of the payments for actual moving and related expenses and actual reasonable reestablishment expenses, in an

amount equal to its average annual net earnings as computed in accordance with paragraph (e) of this section, but not less than $1,000 nor more than $20,000. In the case of a partial acquisition of land, which was a farm operation before the acquisition, the fixed payment shall be made only if the Agency determines that:

(1) The acquisition of part of the land caused the operator to be displaced from the farm operation on the remaining land; or

(2) The partial acquisition caused a substantial change in the nature of the farm operation.

(d) *Nonprofit organization.* A displaced nonprofit organization may choose a fixed payment of $1,000 to $20,000, in lieu of the payments for actual moving and related expenses and actual reasonable reestablishment expenses, if the Agency determines that it cannot be relocated without a substantial loss of existing patronage (membership or clientele). A nonprofit organization is assumed to meet this test, unless the Agency demonstrates otherwise. Any payment in excess of $1,000 must be supported with financial statements for the two 12-month periods prior to the acquisition. The amount to be used for the payment is the average of 2 years annual gross revenues less administrative expenses. (See appendix A, § 24.305(d).)

(e) *Average annual net earnings of a business or farm operation.* The average annual net earnings of a business or farm operation are one-half of its net earnings before Federal, State, and local income taxes during the 2 taxable years immediately prior to the taxable year in which it was displaced. If the business or farm was not in operation for the full 2 taxable years prior to displacement, net earnings shall be based on the actual period of operation at the displacement site during the 2 taxable years prior to displacement, projected to an annual rate. Average annual net earnings may be based upon a different period of time when the Agency determines it to be more equitable. Net earnings include any compensation obtained from the business or farm operation by its owner, the owner's spouse, and dependents. The displaced person shall furnish the Agency proof of net earnings through income tax returns, certified financial statements, or other reasonable evidence, which the Agency determines is satisfactory. (See appendix A, § 24.305(e).)

§ 24.306 Discretionary utility relocation payments.

(a) Whenever a program or project undertaken by a displacing Agency causes the relocation of a utility facility (see § 24.2(a)(31)) and the relocation of the facility creates extraordinary expenses for its owner, the displacing Agency may, at its option, make a relocation payment to the owner for all or part of such expenses, if the following criteria are met:

(1) The utility facility legally occupies State or local government property, or property over which the State or local government has an easement or right-of-way;

(2) The utility facility's right of occupancy thereon is pursuant to State law or local ordinance specifically authorizing such use, or where such use and occupancy has been granted through a franchise, use and occupancy permit, or other similar agreement;

(3) Relocation of the utility facility is required by and is incidental to the primary purpose of the project or program undertaken by the displacing Agency;

(4) There is no Federal law, other than the Uniform Act, which clearly establishes a policy for the payment of utility moving costs that is applicable to the displacing Agency's program or project; and

(5) State or local government reimbursement for utility moving costs or payment of such costs by the displacing Agency is in accordance with State law.

(b) For the purposes of this section, the term extraordinary expenses means those expenses which, in the opinion of the displacing Agency, are not routine or predictable expenses relating to the utility's occupancy of rights-of-way, and are not ordinarily budgeted as operating expenses, unless the owner of the utility facility has explicitly and knowingly agreed to bear such expenses as a condition for use of the property, or has voluntarily agreed to be responsible for such expenses.

(c) A relocation payment to a utility facility owner for moving costs under this section may not exceed the cost to functionally restore the service disrupted by the federally-assisted program or project, less any increase in value of the new facility and salvage value of the old facility. The displacing Agency and the utility facility owner shall reach prior agreement on the nature of the utility relocation work to be accomplished, the eligibility of the work for reimbursement, the responsibilities for financing and accomplishing the work, and the method of accumulating costs and making payment. (*See* appendix A, § 24.306.)

Subpart E—Replacement Housing Payments

§ 24.401 Replacement housing payment for 180-day homeowner-occupants.

(a) *Eligibility.* A displaced person is eligible for the replacement housing payment for a 180-day homeowner-occupant if the person:

(1) Has actually owned and occupied the displacement dwelling for not less than 180 days immediately prior to the initiation of negotiations; and

(2) Purchases and occupies a decent, safe, and sanitary replacement dwelling within one year after the later of the following dates (except that the Agency may extend such one year period for good cause):

(i) The date the displaced person receives final payment for the displacement dwelling or, in the case of condemnation, the date the full amount of the estimate of just compensation is deposited in the court; or

(ii) The date the displacing Agency's obligation under § 24.204 is met.

(b) *Amount of payment.* The replacement housing payment for an eligible 180-day homeowner-occupant may not exceed $22,500. (See also § 24.404.) The payment under this subpart is limited to the amount necessary to relocate to a comparable replacement dwelling within one year from the date the displaced homeowner-occupant is paid for the displacement dwelling, or the date a comparable replacement dwelling is made available to such person, whichever is later. The payment shall be the sum of:

(1) The amount by which the cost of a replacement dwelling exceeds the acquisition cost of the displacement dwelling, as determined in accordance with paragraph (c) of this section;

(2) The increased interest costs and other debt service costs which are incurred in connection with the mortgage(s) on the replacement dwelling, as determined in accordance with paragraph (d) of this section; and

(3) The reasonable expenses incidental to the purchase of the replacement dwelling, as determined in accordance with paragraph (e) of this section.

(c) *Price differential*—(1) *Basic computation.* The price differential to be paid under paragraph (b)(1) of this section is the amount which must be added to the acquisition cost of the displacement dwelling and site (*see* § 24.2(a)(11)) to provide a total amount equal to the lesser of:

(i) The reasonable cost of a comparable replacement dwelling as determined in accordance with § 24.403(a); or

(ii) The purchase price of the decent, safe, and sanitary replacement dwelling actually purchased and occupied by the displaced person.

(2) *Owner retention of displacement dwelling.* If the owner retains ownership of his or her dwelling, moves it from the displacement site, and reoccupies it on a replacement site, the purchase price of the replacement dwelling shall be the sum of:

(i) The cost of moving and restoring the dwelling to a condition comparable to that prior to the move;

(ii) The cost of making the unit a decent, safe, and sanitary replacement dwelling (defined at § 24.2(a)(8)); and

(iii) The current fair market value for residential use of the replacement dwelling site (*see* appendix A, § 24.401(c)(2)(iii)), unless the claimant rented the displacement site and there is a reasonable opportunity for the claimant to rent a suitable replacement site; and

(iv) The retention value of the dwelling, if such retention value is reflected in the ''acquisition cost'' used when computing the replacement housing payment.

(d) *Increased mortgage interest costs.* The displacing Agency shall determine

the factors to be used in computing the amount to be paid to a displaced person under paragraph (b)(2) of this section. The payment for increased mortgage interest cost shall be the amount which will reduce the mortgage balance on a new mortgage to an amount which could be amortized with the same monthly payment for principal and interest as that for the mortgage(s) on the displacement dwelling. In addition, payments shall include other debt service costs, if not paid as incidental costs, and shall be based only on bona fide mortgages that were valid liens on the displacement dwelling for at least 180 days prior to the initiation of negotiations. Paragraphs (d)(1) through (d)(5) of this section shall apply to the computation of the increased mortgage interest costs payment, which payment shall be contingent upon a mortgage being placed on the replacement dwelling.

(1) The payment shall be based on the unpaid mortgage balance(s) on the displacement dwelling; however, in the event the displaced person obtains a smaller mortgage than the mortgage balance(s) computed in the buydown determination, the payment will be prorated and reduced accordingly. (See appendix A, § 24.401(d).) In the case of a home equity loan the unpaid balance shall be that balance which existed 180 days prior to the initiation of negotiations or the balance on the date of acquisition, whichever is less.

(2) The payment shall be based on the remaining term of the mortgage(s) on the displacement dwelling or the term of the new mortgage, whichever is shorter.

(3) The interest rate on the new mortgage used in determining the amount of the payment shall not exceed the prevailing fixed interest rate for conventional mortgages currently charged by mortgage lending institutions in the area in which the replacement dwelling is located.

(4) Purchaser's points and loan origination or assumption fees, but not seller's points, shall be paid to the extent:

(i) They are not paid as incidental expenses;

(ii) They do not exceed rates normal to similar real estate transactions in the area;

(iii) The Agency determines them to be necessary; and

(iv) The computation of such points and fees shall be based on the unpaid mortgage balance on the displacement dwelling, less the amount determined for the reduction of the mortgage balance under this section.

(5) The displaced person shall be advised of the approximate amount of this payment and the conditions that must be met to receive the payment as soon as the facts relative to the person's current mortgage(s) are known and the payment shall be made available at or near the time of closing on the replacement dwelling in order to reduce the new mortgage as intended.

(e) *Incidental expenses.* The incidental expenses to be paid under paragraph (b)(3) of this section or § 24.402(c)(1) are those necessary and reasonable costs actually incurred by the displaced person incident to the purchase of a replacement dwelling, and customarily paid by the buyer, including:

(1) Legal, closing, and related costs, including those for title search, preparing conveyance instruments, notary fees, preparing surveys and plats, and recording fees.

(2) Lender, FHA, or VA application and appraisal fees.

(3) Loan origination or assumption fees that do not represent prepaid interest.

(4) Professional home inspection, certification of structural soundness, and termite inspection.

(5) Credit report.

(6) Owner's and mortgagee's evidence of title, *e.g.*, title insurance, not to exceed the costs for a comparable replacement dwelling.

(7) Escrow agent's fee.

(8) State revenue or documentary stamps, sales or transfer taxes (not to exceed the costs for a comparable replacement dwelling).

(9) Such other costs as the Agency determine to be incidental to the purchase.

(f) Rental assistance payment for 180-day homeowner. A 180-day homeowner-occupant, who could be eligible for a replacement housing payment under paragraph (a) of this section but elects to rent a replacement dwelling, is eligible for a rental assistance payment.

The amount of the rental assistance payment is based on a determination of market rent for the acquired dwelling compared to a comparable rental dwelling available on the market. The difference, if any, is computed in accordance with § 24.402(b)(1), except that the limit of $5,250 does not apply, and disbursed in accordance with § 24.402(b)(3). Under no circumstances would the rental assistance payment exceed the amount that could have been received under § 24.401(b)(1) had the 180-day homeowner elected to purchase and occupy a comparable replacement dwelling.

[70 FR 611, Jan. 4, 2005, as amended at 70 FR 22611, May 2, 2005]

§ 24.402 Replacement housing payment for 90-day occupants.

(a) *Eligibility.* A tenant or owner-occupant displaced from a dwelling is entitled to a payment not to exceed $5,250 for rental assistance, as computed in accordance with paragraph (b) of this section, or downpayment assistance, as computed in accordance with paragraph (c) of this section, if such displaced person:

(1) Has actually and lawfully occupied the displacement dwelling for at least 90 days immediately prior to the initiation of negotiations; and

(2) Has rented, or purchased, and occupied a decent, safe, and sanitary replacement dwelling within 1 year (unless the Agency extends this period for good cause) after:

(i) For a tenant, the date he or she moves from the displacement dwelling; or

(ii) For an owner-occupant, the later of:

(A) The date he or she receives final payment for the displacement dwelling, or in the case of condemnation, the date the full amount of the estimate of just compensation is deposited with the court; or

(B) The date he or she moves from the displacement dwelling.

(b) *Rental assistance payment*—(1) *Amount of payment.* An eligible displaced person who rents a replacement dwelling is entitled to a payment not to exceed $5,250 for rental assistance. (See § 24.404.) Such payment shall be 42 times the amount obtained by subtracting the base monthly rental for the displacement dwelling from the lesser of:

(i) The monthly rent and estimated average monthly cost of utilities for a comparable replacement dwelling; or

(ii) The monthly rent and estimated average monthly cost of utilities for the decent, safe, and sanitary replacement dwelling actually occupied by the displaced person.

(2) *Base monthly rental for displacement dwelling.* The base monthly rental for the displacement dwelling is the lesser of:

(i) The average monthly cost for rent and utilities at the displacement dwelling for a reasonable period prior to displacement, as determined by the Agency (for an owner-occupant, use the fair market rent for the displacement dwelling. For a tenant who paid little or no rent for the displacement dwelling, use the fair market rent, unless its use would result in a hardship because of the person's income or other circumstances);

(ii) Thirty (30) percent of the displaced person's average monthly gross household income if the amount is classified as ''low income'' by the U.S. Department of Housing and Urban Development's Annual Survey of Income Limits for the Public Housing and Section 8 Programs[4]. The base monthly rental shall be established solely on the criteria in paragraph (b)(2)(i) of this section for persons with income exceeding the survey's ''low income'' limits, for persons refusing to provide appropriate evidence of income, and for persons who are dependents. A full time student or resident of an institution may be assumed to be a dependent, unless the person demonstrates otherwise; or,

(iii) The total of the amounts designated for shelter and utilities if the displaced person is receiving a welfare assistance payment from a program that designates the amounts for shelter and utilities.

[4]The U.S. Department of Housing and Urban Development's Public Housing and Section 8 Program Income Limits are updated annually and are available on FHWA's Web site at *http://www.fhwa.dot.gov/realestate/ua/ualic.htm.*

(3) *Manner of disbursement.* A rental assistance payment may, at the Agency's discretion, be disbursed in either a lump sum or in installments. However, except as limited by § 24.403(f), the full amount vests immediately, whether or not there is any later change in the person's income or rent, or in the condition or location of the person's housing.

(c) *Downpayment assistance payment—*(1) *Amount of payment.* An eligible displaced person who purchases a replacement dwelling is entitled to a downpayment assistance payment in the amount the person would receive under paragraph (b) of this section if the person rented a comparable replacement dwelling. At the Agency's discretion, a downpayment assistance payment that is less than $5,250 may be increased to any amount not to exceed $5,250. However, the payment to a displaced homeowner shall not exceed the amount the owner would receive under § 24.401(b) if he or she met the 180-day occupancy requirement. If the Agency elects to provide the maximum payment of $5,250 as a downpayment, the Agency shall apply this discretion in a uniform and consistent manner, so that eligible displaced persons in like circumstances are treated equally. A displaced person eligible to receive a payment as a 180-day owner-occupant under § 24.401(a) is not eligible for this payment. (See appendix A, § 24.402(c).)

(2) *Application of payment.* The full amount of the replacement housing payment for downpayment assistance must be applied to the purchase price of the replacement dwelling and related incidental expenses.

§ 24.403 Additional rules governing replacement housing payments.

(a) *Determining cost of comparable replacement dwelling.* The upper limit of a replacement housing payment shall be based on the cost of a comparable replacement dwelling (defined at § 24.2(a)(6)).

(1) If available, at least three comparable replacement dwellings shall be examined and the payment computed on the basis of the dwelling most nearly representative of, and equal to, or better than, the displacement dwelling.

(2) If the site of the comparable replacement dwelling lacks a major exterior attribute of the displacement dwelling site, (*e.g.*, the site is significantly smaller or does not contain a swimming pool), the value of such attribute shall be subtracted from the acquisition cost of the displacement dwelling for purposes of computing the payment.

(3) If the acquisition of a portion of a typical residential property causes the displacement of the owner from the dwelling and the remainder is a buildable residential lot, the Agency may offer to purchase the entire property. If the owner refuses to sell the remainder to the Agency, the fair market value of the remainder may be added to the acquisition cost of the displacement dwelling for purposes of computing the replacement housing payment.

(4) To the extent feasible, comparable replacement dwellings shall be selected from the neighborhood in which the displacement dwelling was located or, if that is not possible, in nearby or similar neighborhoods where housing costs are generally the same or higher.

(5) Multiple occupants of one displacement dwelling. If two or more occupants of the displacement dwelling move to separate replacement dwellings, each occupant is entitled to a reasonable prorated share, as determined by the Agency, of any relocation payments that would have been made if the occupants moved together to a comparable replacement dwelling. However, if the Agency determines that two or more occupants maintained separate households within the same dwelling, such occupants have separate entitlements to relocation payments.

(6) Deductions from relocation payments. An Agency shall deduct the amount of any advance relocation payment from the relocation payment(s) to which a displaced person is otherwise entitled. The Agency shall not withhold any part of a relocation payment to a displaced person to satisfy an obligation to any other creditor.

(7) Mixed-use and multifamily properties. If the displacement dwelling was part of a property that contained another dwelling unit and/or space used

for nonresidential purposes, and/or is located on a lot larger than typical for residential purposes, only that portion of the acquisition payment which is actually attributable to the displacement dwelling shall be considered the acquisition cost when computing the replacement housing payment.

(b) *Inspection of replacement dwelling.* Before making a replacement housing payment or releasing the initial payment from escrow, the Agency or its designated representative shall inspect the replacement dwelling and determine whether it is a decent, safe, and sanitary dwelling as defined at §24.2(a)(8).

(c) *Purchase of replacement dwelling.* A displaced person is considered to have met the requirement to purchase a replacement dwelling, if the person:

(1) Purchases a dwelling;

(2) Purchases and rehabilitates a substandard dwelling;

(3) Relocates a dwelling which he or she owns or purchases;

(4) Constructs a dwelling on a site he or she owns or purchases;

(5) Contracts for the purchase or construction of a dwelling on a site provided by a builder or on a site the person owns or purchases; or

(6) Currently owns a previously purchased dwelling and site, valuation of which shall be on the basis of current fair market value.

(d) *Occupancy requirements for displacement or replacement dwelling.* No person shall be denied eligibility for a replacement housing payment solely because the person is unable to meet the occupancy requirements set forth in these regulations for a reason beyond his or her control, including:

(1) A disaster, an emergency, or an imminent threat to the public health or welfare, as determined by the President, the Federal Agency funding the project, or the displacing Agency; or

(2) Another reason, such as a delay in the construction of the replacement dwelling, military duty, or hospital stay, as determined by the Agency.

(e) *Conversion of payment.* A displaced person who initially rents a replacement dwelling and receives a rental assistance payment under §24.402(b) is eligible to receive a payment under §24.401 or §24.402(c) if he or she meets the eligibility criteria for such payments, including purchase and occupancy within the prescribed 1-year period. Any portion of the rental assistance payment that has been disbursed shall be deducted from the payment computed under §24.401 or §24.402(c).

(f) *Payment after death.* A replacement housing payment is personal to the displaced person and upon his or her death the undisbursed portion of any such payment shall not be paid to the heirs or assigns, except that:

(1) The amount attributable to the displaced person's period of actual occupancy of the replacement housing shall be paid.

(2) Any remaining payment shall be disbursed to the remaining family members of the displaced household in any case in which a member of a displaced family dies.

(3) Any portion of a replacement housing payment necessary to satisfy the legal obligation of an estate in connection with the selection of a replacement dwelling by or on behalf of a deceased person shall be disbursed to the estate.

(g) *Insurance proceeds.* To the extent necessary to avoid duplicate compensation, the amount of any insurance proceeds received by a person in connection with a loss to the displacement dwelling due to a catastrophic occurrence (fire, flood, etc.) shall be included in the acquisition cost of the displacement dwelling when computing the price differential. (*See* §24.3.)

[70 FR 611, Jan. 4, 2005, as amended at 70 FR 22611, May 2, 2005]

§24.404 Replacement housing of last resort.

(a) *Determination to provide replacement housing of last resort.* Whenever a program or project cannot proceed on a timely basis because comparable replacement dwellings are not available within the monetary limits for owners or tenants, as specified in §24.401 or §24.402, as appropriate, the Agency shall provide additional or alternative assistance under the provisions of this subpart. Any decision to provide last resort housing assistance must be adequately justified either:

(1) On a case-by-case basis, for good cause, which means that appropriate consideration has been given to:

(i) The availability of comparable replacement housing in the program or project area;

(ii) The resources available to provide comparable replacement housing; and

(iii) The individual circumstances of the displaced person, or

(2) By a determination that:

(i) There is little, if any, comparable replacement housing available to displaced persons within an entire program or project area; and, therefore, last resort housing assistance is necessary for the area as a whole;

(ii) A program or project cannot be advanced to completion in a timely manner without last resort housing assistance; and

(iii) The method selected for providing last resort housing assistance is cost effective, considering all elements, which contribute to total program or project costs.

(b) *Basic rights of persons to be displaced.* Notwithstanding any provision of this subpart, no person shall be required to move from a displacement dwelling unless comparable replacement housing is available to such person. No person may be deprived of any rights the person may have under the Uniform Act or this part. The Agency shall not require any displaced person to accept a dwelling provided by the Agency under these procedures (unless the Agency and the displaced person have entered into a contract to do so) in lieu of any acquisition payment or any relocation payment for which the person may otherwise be eligible.

(c) *Methods of providing comparable replacement housing.* Agencies shall have broad latitude in implementing this subpart, but implementation shall be for reasonable cost, on a case-by-case basis unless an exception to case-by-case analysis is justified for an entire project.

(1) The methods of providing replacement housing of last resort include, but are not limited to:

(i) A replacement housing payment in excess of the limits set forth in § 24.401 or § 24.402. A replacement housing payment under this section may be provided in installments or in a lump sum at the Agency's discretion.

(ii) Rehabilitation of and/or additions to an existing replacement dwelling.

(iii) The construction of a new replacement dwelling.

(iv) The provision of a direct loan, which requires regular amortization or deferred repayment. The loan may be unsecured or secured by the real property. The loan may bear interest or be interest-free.

(v) The relocation and, if necessary, rehabilitation of a dwelling.

(vi) The purchase of land and/or a replacement dwelling by the displacing Agency and subsequent sale or lease to, or exchange with a displaced person.

(vii) The removal of barriers for persons with disabilities.

(2) Under special circumstances, consistent with the definition of a comparable replacement dwelling, modified methods of providing replacement housing of last resort permit consideration of replacement housing based on space and physical characteristics different from those in the displacement dwelling (*see* appendix A, § 24.404(c)), including upgraded, but smaller replacement housing that is decent, safe, and sanitary and adequate to accommodate individuals or families displaced from marginal or substandard housing with probable functional obsolescence. In no event, however, shall a displaced person be required to move into a dwelling that is not functionally equivalent in accordance with § 24.2(a)(6)(ii) of this part.

(3) The Agency shall provide assistance under this subpart to a displaced person who is not eligible to receive a replacement housing payment under §§ 24.401 and 24.402 because of failure to meet the length of occupancy requirement when comparable replacement rental housing is not available at rental rates within the displaced person's financial means. (*See* § 24.2(a)(6)(viii)(C).) Such assistance shall cover a period of 42 months.

Subpart F—Mobile Homes

§ 24.501 Applicability.

(a) *General.* This subpart describes the requirements governing the provision of replacement housing payments

to a person displaced from a mobile home and/or mobile home site who meets the basic eligibility requirements of this part. Except as modified by this subpart, such a displaced person is entitled to a moving expense payment in accordance with subpart D of this part and a replacement housing payment in accordance with subpart E of this part to the same extent and subject to the same requirements as persons displaced from conventional dwellings. Moving cost payments to persons occupying mobile homes are covered in § 24.301(g)(1) through (g)(10).

(b) *Partial acquisition of mobile home park.* The acquisition of a portion of a mobile home park property may leave a remaining part of the property that is not adequate to continue the operation of the park. If the Agency determines that a mobile home located in the remaining part of the property must be moved as a direct result of the project, the occupant of the mobile home shall be considered to be a displaced person who is entitled to relocation payments and other assistance under this part.

§ 24.502 Replacement housing payment for 180-day mobile homeowner displaced from a mobile home, and/or from the acquired mobile home site.

(a) *Eligibility.* An owner-occupant displaced from a mobile home or site is entitled to a replacement housing payment, not to exceed $22,500, under § 24.401 if:

(1) The person occupied the mobile home on the displacement site for at least 180 days immediately before:

(i) The initiation of negotiations to acquire the mobile home, if the person owned the mobile home and the mobile home is real property;

(ii) The initiation of negotiations to acquire the mobile home site if the mobile home is personal property, but the person owns the mobile home site; or

(iii) The date of the Agency's written notification to the owner-occupant that the owner is determined to be displaced from the mobile home as described in paragraphs (a)(3)(i) through (iv) of this section.

(2) The person meets the other basic eligibility requirements at § 24.401(a)(2); and

(3) The Agency acquires the mobile home as real estate, or acquires the mobile home site from the displaced owner, or the mobile home is personal property but the owner is displaced from the mobile home because the Agency determines that the mobile home:

(i) Is not, and cannot economically be made decent, safe, and sanitary;

(ii) Cannot be relocated without substantial damage or unreasonable cost;

(iii) Cannot be relocated because there is no available comparable replacement site; or

(iv) Cannot be relocated because it does not meet mobile home park entrance requirements.

(b) *Replacement housing payment computation for a 180-day owner that is displaced from a mobile home.* The replacement housing payment for an eligible displaced 180-day owner is computed as described at § 24.401(b) incorporating the following, as applicable:

(1) If the Agency acquires the mobile home as real estate and/or acquires the owned site, the acquisition cost used to compute the price differential payment is the actual amount paid to the owner as just compensation for the acquisition of the mobile home, and/or site, if owned by the displaced mobile homeowner.

(2) If the Agency does not purchase the mobile home as real estate but the owner is determined to be displaced from the mobile home and eligible for a replacement housing payment based on paragraph (a)(1)(iii) of this section, the eligible price differential payment for the purchase of a comparable replacement mobile home, is the lesser of the displaced mobile homeowner's net cost to purchase a replacement mobile home (*i.e.*, purchase price of the replacement mobile home less trade-in or sale proceeds of the displacement mobile home); or, the cost of the Agency's selected comparable mobile home less the Agency's estimate of the salvage or trade-in value for the mobile home from which the person is displaced.

(3) If a comparable replacement mobile home site is not available, the price differential payment shall be computed on the basis of the reasonable cost of a conventional comparable replacement dwelling.

(c) *Rental assistance payment for a 180-day owner-occupant that is displaced from a leased or rented mobile home site.* If the displacement mobile home site is leased or rented, a displaced 180-day owner-occupant is entitled to a rental assistance payment computed as described in § 24.402(b). This rental assistance payment may be used to lease a replacement site; may be applied to the purchase price of a replacement site; or may be applied, with any replacement housing payment attributable to the mobile home, to the purchase of a replacement mobile home or conventional decent, safe and sanitary dwelling.

(d) *Owner-occupant not displaced from the mobile home.* If the Agency determines that a mobile home is personal property and may be relocated to a comparable replacement site, but the owner-occupant elects not to do so, the owner is not entitled to a replacement housing payment for the purchase of a replacement mobile home. However, the owner is eligible for moving costs described at § 24.301 and any replacement housing payment for the purchase or rental of a comparable site as described in this section or § 24.503 as applicable.

§ 24.503 Replacement housing payment for 90-day mobile home occupants.

A displaced tenant or owner-occupant of a mobile home and/or site is eligible for a replacement housing payment, not to exceed $5,250, under § 24.402 if:

(a) The person actually occupied the displacement mobile home on the displacement site for at least 90 days immediately prior to the initiation of negotiations;

(b) The person meets the other basic eligibility requirements at § 24.402(a); and

(c) The Agency acquires the mobile home and/or mobile home site, or the mobile home is not acquired by the Agency but the Agency determines that the occupant is displaced from the mobile home because of one of the circumstances described at § 24.502(a)(3).

Subpart G—Certification

§ 24.601 Purpose.

This subpart permits a State Agency to fulfill its responsibilities under the Uniform Act by certifying that it shall operate in accordance with State laws and regulations which shall accomplish the purpose and effect of the Uniform Act, in lieu of providing the assurances required by § 24.4 of this part.

§ 24.602 Certification application.

An Agency wishing to proceed on the basis of a certification may request an application for certification from the Lead Agency Director, Office of Real Estate Services, HEPR–1, Federal Highway Administration, 1200 New Jersey Avenue, SE., Washington, DC 20590. The completed application for certification must be approved by the governor of the State, or the governor's designee, and must be coordinated with the Federal funding Agency, in accordance with application procedures.

[70 FR 611, Jan. 4, 2005, as amended at 73 FR 33329, June 12, 2008]

§ 24.603 Monitoring and corrective action.

(a) The Federal Lead Agency shall, in coordination with other Federal Agencies, monitor from time to time State Agency implementation of programs or projects conducted under the certification process and the State Agency shall make available any information required for this purpose.

(b) The Lead Agency may require periodic information or data from affected Federal or State Agencies.

(c) A Federal Agency may, after consultation with the Lead Agency, and notice to and consultation with the governor, or his or her designee, rescind any previous approval provided under this subpart if the certifying State Agency fails to comply with its certification or with applicable State law and regulations. The Federal Agency shall initiate consultation with the Lead Agency at least 30 days prior to any decision to rescind approval of a certification under this subpart. The Lead Agency will also inform other Federal Agencies, which have accepted a certification under this subpart from

the same State Agency, and will take whatever other action that may be appropriate.

(d) Section 103(b)(2) of the Uniform Act, as amended, requires that the head of the Lead Agency report biennially to the Congress on State Agency implementation of section 103. To enable adequate preparation of the prescribed biennial report, the Lead Agency may require periodic information or data from affected Federal or State Agencies.

APPENDIX A TO PART 24—ADDITIONAL INFORMATION

This appendix provides additional information to explain the intent of certain provisions of this part.

SUBPART A—GENERAL

Section 24.2 Definitions and Acronyms

Section 24.2(a)(6) Definition of comparable replacement dwelling. The requirement in §24.2(a)(6)(ii) that a comparable replacement dwelling be ''functionally equivalent'' to the displacement dwelling means that it must perform the same function, and provide the same utility. While it need not possess every feature of the displacement dwelling, the principal features must be present.

For example, if the displacement dwelling contains a pantry and a similar dwelling is not available, a replacement dwelling with ample kitchen cupboards may be acceptable. Insulated and heated space in a garage might prove an adequate substitute for basement workshop space. A dining area may substitute for a separate dining room. Under some circumstances, attic space could substitute for basement space for storage purposes, and vice versa.

Only in unusual circumstances may a comparable replacement dwelling contain fewer rooms or, consequentially, less living space than the displacement dwelling. Such may be the case when a decent, safe, and sanitary replacement dwelling (which by definition is ''adequate to accommodate'' the displaced person) may be found to be ''functionally equivalent'' to a larger but very run-down substandard displacement dwelling. Another example is when a displaced person accepts an offer of government housing assistance and the applicable requirements of such housing assistance program require that the displaced person occupy a dwelling that has fewer rooms or less living space than the displacement dwelling.

Section 24.2(a)(6)(vii). The definition of comparable replacement dwelling requires that a comparable replacement dwelling for a person who is not receiving assistance under any government housing program before displacement must be currently available on the private market without any subsidy under a government housing program.

Section 24.2(a)(6)(ix). A public housing unit may qualify as a comparable replacement dwelling only for a person displaced from a public housing unit. A privately owned dwelling with a housing program subsidy tied to the unit may qualify as a comparable replacement dwelling only for a person displaced from a similarly subsidized unit or public housing.

A housing program subsidy that is paid to a person (not tied to the building), such as a HUD Section 8 Housing Voucher Program, may be reflected in an offer of a comparable replacement dwelling to a person receiving a similar subsidy or occupying a privately owned subsidized unit or public housing unit before displacement.

However, nothing in this part prohibits an Agency from offering, or precludes a person from accepting, assistance under a government housing program, even if the person did not receive similar assistance before displacement. However, the Agency is obligated to inform the person of his or her options under this part. (If a person accepts assistance under a government housing assistance program, the rules of that program governing the size of the dwelling apply, and the rental assistance payment under §24.402 would be computed on the basis of the person's actual out-of-pocket cost for the replacement housing.)

Section 24.2(a)(8)(ii) Decent, Safe and Sanitary. Many local housing and occupancy codes require the abatement of deteriorating paint, including lead-based paint and lead-based paint dust, in protecting the public health and safety. Where such standards exist, they must be honored. Even where local law does not mandate adherence to such standards, it is strongly recommended that they be considered as a matter of public policy.

Section 24.2(a)(8)(vii) Persons with a disability. Reasonable accommodation of a displaced person with a disability at the replacement dwelling means the Agency is required to address persons with a physical impairment that substantially limits one or more of the major life activities. In these situations, reasonable accommodation should include the following at a minimum: Doors of adequate width; ramps or other assistance devices to traverse stairs and access bathtubs, shower stalls, toilets and sinks; storage cabinets, vanities, sink and mirrors at appropriate heights. Kitchen accommodations will include sinks and storage cabinets built at appropriate heights for access. The Agency shall also consider other items that may be necessary, such as physical modification to a unit, based on the displaced person's needs.

Section 24.2(a)(9)(ii)(D) Persons not displaced. Paragraph (a)(9)(ii)(D) of this section recognizes that there are circumstances where the acquisition, rehabilitation or demolition of real property takes place without the intent or necessity that an occupant of the property be permanently displaced. Because such occupants are not considered ''displaced persons'' under this part, great care must be exercised to ensure that they are treated fairly and equitably. For example, if the tenant-occupant of a dwelling will not be displaced, but is required to relocate temporarily in connection with the project, the temporarily occupied housing must be decent, safe, and sanitary and the tenant must be reimbursed for all reasonable out-of-pocket expenses incurred in connection with the temporary relocation. These expenses may include moving expenses and increased housing costs during the temporary relocation. Temporary relocation should not extend beyond one year before the person is returned to his or her previous unit or location. The Agency must contact any residential tenant who has been temporarily relocated for a period beyond one year and offer all permanent relocation assistance. This assistance would be in addition to any assistance the person has already received for temporary relocation, and may not be reduced by the amount of any temporary relocation assistance.

Similarly, if a business will be shut-down for any length of time due to rehabilitation of a site, it may be temporarily relocated and reimbursed for all reasonable out of pocket expenses or must be determined to be displaced at the Agency's option.

Any person who disagrees with the Agency's determination that he or she is not a displaced person under this part may file an appeal in accordance with 49 CFR part 24.10 of this regulation.

Section 24.2(a)(11) Dwelling Site. This definition ensures that the computation of replacement housing payments are accurate and realistic (a) when the dwelling is located on a larger than normal site, (b) when mixed-use properties are acquired, (c) when more than one dwelling is located on the acquired property, or (d) when the replacement dwelling is retained by an owner and moved to another site.

Section 24.2(a)(14) Household income (exclusions). Household income for purposes of this regulation does not include program benefits that are not considered income by Federal law such as food stamps and the Women Infants and Children (WIC) program. For a more detailed list of income exclusions see Federal Highway Administration, Office of Real Estate Services Web site: *http://www.fhwa.dot.gov/realestate/.* (FR 4644–N–16 page 20319 Updated.) If there is a question on whether or not to include income from a specific program contact the Federal Agency administering the program.

Section 24(a)(15) Initiation of negotiations. This section provides a special definition for acquisition and displacements under Pub. L. 96–510 or Superfund. The order of activities under Superfund may differ slightly in that temporary relocation may precede acquisition. Superfund is a program designed to clean up hazardous waste sites. When such a site is discovered, it may be necessary, in certain limited circumstances, to alert individual owners and tenants to potential health or safety threats and to offer to temporarily relocate them while additional information is gathered. If a decision is later made to permanently relocate such persons, those who had been temporarily relocated under Superfund authority would no longer be on site when a formal, written offer to acquire the property was made, and thus would lose their eligibility for a replacement housing payment. In order to prevent this unfair outcome, we have provided a definition of initiation of negotiation, which is based on the date the Federal Government offers to temporarily relocate an owner or tenant from the subject property.

Section 24.2(a)(15)(iv) Initiation of negotiations (Tenants.) Tenants who occupy property that may be acquired amicably, without recourse to the use of the power of eminent domain, must be fully informed as to their eligibility for relocation assistance. This includes notifying such tenants of their potential eligibility when negotiations are initiated, notifying them if they become fully eligible, and, in the event the purchase of the property will not occur, notifying them that they are no longer eligible for relocation benefits. If a tenant is not readily accessible, as the result of a disaster or emergency, the Agency must make a good faith effort to provide these notifications and document its efforts in writing.

Section 24.2(a)(17) Mobile home. The following examples provide additional guidance on the types of mobile homes and manufactured housing that can be found acceptable as comparable replacement dwellings for persons displaced from mobile homes. A recreational vehicle that is capable of providing living accommodations may be considered a replacement dwelling if the following criteria are met: the recreational vehicle is purchased and occupied as the ''primary'' place of residence; it is located on a purchased or leased site and connected to or have available all necessary utilities for functioning as a housing unit on the date of the displacing Agency's inspection; and, the dwelling, as sited, meets all local, State, and Federal requirements for a decent, safe and sanitary dwelling. (The regulations of some local jurisdictions will not permit the consideration of these vehicles as decent, safe and sanitary dwellings. In those cases, the recreational vehicle will not qualify as a replacement dwelling.)

For HUD programs, mobile home is defined as ''a structure, transportable in one or more sections, which, in the traveling mode, is eight body feet or more in width or forty body feet or more in length, or, when erected on site, is three hundred or more square feet, and which is built on a permanent chassis and designed to be used as a dwelling with or without a permanent foundation when connected to the required utilities and includes the plumbing, heating, air-conditioning, and electrical systems contained therein; except that such terms shall include any structure which meets all the requirements of this paragraph except the size requirements and with respect to which the manufacturer voluntarily files a certification required by the Secretary of HUD and complies with the standards established under the National Manufactured Housing Construction and Safety Standards Act, provided by Congress in the original 1974 Manufactured Housing Act.'' In 1979 the term ''mobile home'' was changed to ''manufactured home.'' For purposes of this regulation, the terms mobile home and manufactured home are synonymous.

When assembled, manufactured homes built after 1976 contain no less than 320 square feet. They may be single or multi-sectioned units when installed. Their designation as personalty or realty will be determined by State law. When determined to be realty, most are eligible for conventional mortgage financing.

The 1976 HUD standards distinguish manufactured homes from factory-built ''modular homes'' as well as conventional or ''stick-built'' homes. Both of these types of housing are required to meet State and local construction codes.

Section 24.3 No Duplication of Payments. This section prohibits an Agency from making a payment to a person under these regulations that would duplicate another payment the person receives under Federal, State, or local law. The Agency is not required to conduct an exhaustive search for such other payments; it is only required to avoid creating a duplication based on the Agency's knowledge at the time a payment is computed.

SUBPART B—REAL PROPERTY ACQUISITION

Federal Agencies may find that, for Federal eminent domain purposes, the terms ''fair market value'' (as used throughout this subpart) and ''market value,'' which may be the more typical term in private transactions, may be synonymous.

Section 24.101(a) Direct Federal program or project. All 49 CFR Part 24 Subpart B (real property acquisition) requirements apply to all direct acquisitions for Federal programs and projects by Federal Agencies, except for acquisitions undertaken by the Tennessee Valley Authority or the Rural Utilities Service. There are no exceptions for ''voluntary transactions.''

Section 24.101(b)(1)(i). The term ''general geographic area'' is used to clarify that the ''geographic area'' is not to be construed to be a small, limited area.

Sections 24.101(b)(1)(iv) and (2)(ii). These sections provide that, for programs and projects receiving Federal financial assistance described in §§24.101(b)(1) and (2), Agencies are to inform the owner(s) in writing of the Agency's estimate of the fair market value for the property to be acquired.

While this part does not require an appraisal for these transactions, Agencies may still decide that an appraisal is necessary to support their determination of the market value of these properties, and, in any event, Agencies must have some reasonable basis for their determination of market value. In addition, some of the concepts inherent in Federal Program appraisal practice are appropriate for these estimates. It would be appropriate for Agencies to adhere to project influence restrictions, as well as guard against discredited ''public interest value'' valuation concepts.

After an Agency has established an amount it believes to be the market value of the property and has notified the owner of this amount in writing, an Agency may negotiate freely with the owner in order to reach agreement. Since these transactions are voluntary, accomplished by a willing buyer and a willing seller, negotiations may result in agreement for the amount of the original estimate, an amount exceeding it, or for a lesser amount. Although not required by the regulations, it would be entirely appropriate for Agencies to apply the administrative settlement concept and procedures in §24.102(i) to negotiate amounts that exceed the original estimate of market value. Agencies shall not take any coercive action in order to reach agreement on the price to be paid for the property.

Section 24.101(c) Less-than-full-fee interest in real property. This provision provides a benchmark beyond which the requirements of the subpart clearly apply to leases.

Section 24.102(c)(2) Appraisal, waiver thereof, and invitation to owner. The purpose of the appraisal waiver provision is to provide Agencies a technique to avoid the costs and time delay associated with appraisal requirements for low-value, non-complex acquisitions. The intent is that non-appraisers make the waiver valuations, freeing appraisers to do more sophisticated work.

The Agency employee making the determination to use the appraisal waiver process must have enough understanding of appraisal principles to be able to determine whether or not the proposed acquisition is low value and uncomplicated.

Waiver valuations are not appraisals as defined by the Uniform Act and these regulations; therefore, appraisal performance requirements or standards, regardless of their source, are not required for waiver valuations by this rule. Since waiver valuations are not appraisals, neither is there a requirement for an appraisal review. However, the Agency must have a reasonable basis for the waiver valuation and an Agency official must still establish an amount believed to be just compensation to offer the property owner(s).

The definition of ''appraisal'' in the Uniform Act and appraisal waiver provisions of the Uniform Act and these regulations are Federal law and public policy and should be considered as such when determining the impact of appraisal requirements levied by others.

Section 24.102(d) Establishment of offer of just compensation. The initial offer to the property owner may not be less than the amount of the Agency's approved appraisal, but may exceed that amount if the Agency determines that a greater amount reflects just compensation for the property.

Section 24.102(f) Basic negotiation procedures. An offer should be adequately presented to an owner, and the owner should be properly informed. Personal, face-to-face contact should take place, if feasible, but this section does not require such contact in all cases.

This section also provides that the property owner be given a reasonable opportunity to consider the Agency's offer and to present relevant material to the Agency. In order to satisfy this requirement, Agencies must allow owners time for analysis, research and development, and compilation of a response, including perhaps getting an appraisal. The needed time can vary significantly, depending on the circumstances, but thirty (30) days would seem to be the minimum time these actions can be reasonably expected to require. Regardless of project time pressures, property owners must be afforded this opportunity.

In some jurisdictions, there is pressure to initiate formal eminent domain procedures at the earliest opportunity because completing the eminent domain process, including gaining possession of the needed real property, is very time consuming. These provisions are not intended to restrict this practice, so long as it does not interfere with the reasonable time that must be provided for negotiations, described above, and the Agencies adhere to the Uniform Act ban on coercive action (section 301(7) of the Uniform Act).

If the owner expresses intent to provide an appraisal report, Agencies are encouraged to provide the owner and/or his/her appraiser a copy of Agency appraisal requirements and inform them that their appraisal should be based on those requirements.

Section 24.102(i) Administrative settlement. This section provides guidance on administrative settlement as an alternative to judicial resolution of a difference of opinion on the value of a property, in order to avoid unnecessary litigation and congestion in the courts.

All relevant facts and circumstances should be considered by an Agency official delegated this authority. Appraisers, including review appraisers, must not be pressured to adjust their estimate of value for the purpose of justifying such settlements. Such action would invalidate the appraisal process.

Section 24.102(j) Payment before taking possession. It is intended that a right-of-entry for construction purposes be obtained only in the exceptional case, such as an emergency project, when there is no time to make an appraisal and purchase offer and the property owner is agreeable to the process.

Section 24.102(m) Fair rental. Section 301(6) of the Uniform Act limits what an Agency may charge when a former owner or previous occupant of a property is permitted to rent the property for a short term or when occupancy is subject to termination by the Agency on short notice. Such rent may not exceed ''the fair rental value of the property to a short-term occupier.'' Generally, the Agency's right to terminate occupancy on short notice (whether or not the renter also has that right) supports the establishment of a lesser rental than might be found in a longer, fixed-term situation.

Section 24.102(n) Conflict of interest. The overall objective is to minimize the risk of fraud while allowing Agencies to operate as efficiently as possible. There are three parts to this provision.

The first provision is the prohibition against having any interest in the real property being valued by the appraiser (for an appraisal), the valuer (for a waiver estimate) or the review appraiser (for an appraisal review.)

The second provision is that no person functioning as a negotiator for a project or program can supervise or formally evaluate the performance of any appraiser or review appraiser performing appraisal or appraisal review work for that project or program. The intent of this provision is to ensure appraisal/valuation independence and to prevent inappropriate influence. It is not intended to prevent Agencies from providing appraisers/valuers with appropriate project information and participating in determining the scope of work for the appraisal or valuation. For a program or project receiving Federal financial assistance, the Federal funding Agency may waive this requirement if it would create a hardship for the Agency. The intent is to accommodate Federal-aid

recipients that have a small staff where this provision would be unworkable.

The third provision is to minimize situations where administrative costs exceed acquisition costs. Section 24.102(n) also provides that the same person may prepare a valuation estimate (including an appraisal) and negotiate that acquisition, if the valuation estimate amount is $10,000 or less. However, it should be noted that this exception for properties valued at $10,000 or less is not mandatory, *e.g.*, Agencies are not required to use those who prepare a waiver valuation or appraisal of $10,000 or less to negotiate the acquisition, and, all appraisals must be reviewed in accordance with §24.104. This includes appraisals of real property valued at $10,000 or less.

Section 24.103 Criteria for Appraisals. The term ''requirements'' is used throughout this section to avoid confusion with The Appraisal Foundation's Uniform Standards of Professional Appraisal Practice (USPAP) ''standards.'' Although this section discusses appraisal requirements, the definition of ''appraisal'' itself at §24.2(a)(3) includes appraisal performance requirements that are an inherent part of this section.

The term ''Federal and federally-assisted program or project'' is used to better identify the type of appraisal practices that are to be referenced and to differentiate them from the private sector, especially mortgage lending, appraisal practice.

Section 24.103(a) Appraisal requirements. The first sentence instructs readers that requirements for appraisals for Federal and federally-assisted programs or projects are located in 49 CFR part 24. These are the basic appraisal requirements for Federal and federally-assisted programs or projects. However, Agencies may enhance and expand on them, and there may be specific project or program legislation that references other appraisal requirements.

These appraisal requirements are necessarily designed to comply with the Uniform Act and other Federal eminent domain based appraisal requirements. They are also considered to be consistent with Standards Rules 1, 2, and 3 of the 2004 edition of the USPAP. Consistency with USPAP has been a feature of these appraisal requirements since the beginning of USPAP. This ''consistent'' relationship was more formally recognized in OMB Bulletin 92–06. While these requirements are considered consistent with USPAP, neither can supplant the other; their provisions are neither identical, nor interchangeable. Appraisals performed for Federal and federally-assisted real property acquisition must follow the requirements in this regulation. Compliance with any other appraisal requirements is not the purview of this regulation. An appraiser who is committed to working within the bounds of USPAP should recognize that compliance with both USPAP and these requirements may be achieved by using the Supplemental Standards Rule and the Jurisdictional Exception Rule of USPAP, where applicable.

The term ''scope of work'' defines the general parameters of the appraisal. It reflects the needs of the Agency and the requirements of Federal and federally-assisted program appraisal practice. It should be developed cooperatively by the assigned appraiser and an Agency official who is competent to both represent the Agency's needs and respect valid appraisal practice. The scope of work statement should include the purpose and/or function of the appraisal, a definition of the estate being appraised, and if it is fair market value, its applicable definition, and the assumptions and limiting conditions affecting the appraisal. It may include parameters for the data search and identification of the technology, including approaches to value, to be used to analyze the data. The scope of work should consider the specific requirements in 49 CFR 24.103(a)(2)(i) through (v) and address them as appropriate.

Section 24.103(a)(1). The appraisal report should identify the items considered in the appraisal to be real property, as well as those identified as personal property.

Section 24.103(a)(2). All relevant and reliable approaches to value are to be used. However, where an Agency determines that the sales comparison approach will be adequate by itself and yield credible appraisal results because of the type of property being appraised and the availability of sales data, it may limit the appraisal assignment to the sales comparison approach. This should be reflected in the scope of work.

Section 24.103(b) Influence of the project on just compensation. As used in this section, the term ''project'' means an undertaking which is planned, designed, and intended to operate as a unit.

When the public is aware of the proposed project, project area property values may be affected. Therefore, property owners should not be penalized because of a decrease in value caused by the proposed project nor reap a windfall at public expense because of increased value created by the proposed project.

Section 24.103(d)(1). The appraiser and review appraiser must each be qualified and competent to perform the appraisal and appraisal review assignments, respectively. Among other qualifications, State licensing or certification and professional society designations can help provide an indication of an appraiser's abilities.

Section 24.104 Review of appraisals. The term ''review appraiser'' is used rather than ''reviewing appraiser,'' to emphasize that ''review appraiser'' is a separate specialty and not just an appraiser who happens to be reviewing an appraisal. Federal Agencies have

long held the perspective that appraisal review is a unique skill that, while it certainly builds on appraisal skills, requires more. The review appraiser should possess both appraisal technical abilities and the ability to be the two-way bridge between the Agency's real property valuation needs and the appraiser.

Agency review appraisers typically perform a role greater than technical appraisal review. They are often involved in early project development. Later they may be involved in devising the scope of work statements and participate in making appraisal assignments to fee and/or staff appraisers. They are also mentors and technical advisors, especially on Agency policy and requirements, to appraisers, both staff and fee. Additionally, review appraisers are frequently technical advisors to other Agency officials.

Section 24.104(a). This paragraph states that the review appraiser is to review the appraiser's presentation and analysis of market information and that it is to be reviewed against §24.103 and other applicable requirements, including, to the extent appropriate, the Uniform Appraisal Standards for Federal Land Acquisition. The appraisal review is to be a technical review by an appropriately qualified review appraiser. The qualifications of the review appraiser and the level of explanation of the basis for the review appraiser's recommended (or approved) value depend on the complexity of the appraisal problem. If the initial appraisal submitted for review is not acceptable, the review appraiser is to communicate and work with the appraiser to the greatest extent possible to facilitate the appraiser's development of an acceptable appraisal.

In doing this, the review appraiser is to remain in an advisory role, not directing the appraisal, and retaining objectivity and options for the appraisal review itself.

If the Agency intends that the staff review appraiser approve the appraisal (as the basis for the establishment of the amount believed to be just compensation), or establish the amount the Agency believes is just compensation, she/he must be specifically authorized by the Agency to do so. If the review appraiser is not specifically authorized to approve the appraisal (as the basis for the establishment of the amount believed to be just compensation), or establish the amount believed to be just compensation, that authority remains with another Agency official.

Section 24.104(b). In developing an independent approved or recommended value, the review appraiser may reference any acceptable resource, including acceptable parts of any appraisal, including an otherwise unacceptable appraisal. When a review appraiser develops an independent value, while retaining the appraisal review, that independent value also becomes the approved appraisal of the fair market value for Uniform Act Section 301(3) purposes. It is within Agency discretion to decide whether a second review is needed if the first review appraiser establishes a value different from that in the appraisal report or reports on the property.

Section 24.104(c). Before acceptance of an appraisal, the review appraiser must determine that the appraiser's documentation, including valuation data and analysis of that data, demonstrates the soundness of the appraiser's opinion of value. For the purposes of this part, an acceptable appraisal is any appraisal that, on its own, meets the requirements of §24.103. An approved appraisal is the one acceptable appraisal that is determined to best fulfill the requirement to be the basis for the amount believed to be just compensation. Recognizing that appraisal is not an exact science, there may be more than one acceptable appraisal of a property, but for the purposes of this part, there can be only one approved appraisal.

At the Agency's discretion, for a low value property requiring only a simple appraisal process, the review appraiser's recommendation (or approval), endorsing the appraiser's report, may be determined to satisfy the requirement for the review appraiser's signed report and certification.

Section 24.106(b). Expenses incidental to transfer of title to the agency. Generally, the Agency is able to pay such incidental costs directly and, where feasible, is required to do so. In order to prevent the property owner from making unnecessary out-of-pocket expenditures and to avoid duplication of expenses, the property owner should be informed early in the acquisition process of the Agency's intent to make such arrangements. Such expenses must be reasonable and necessary.

SUBPART C—GENERAL RELOCATION REQUIREMENTS

Section 24.202 Applicability and Section 205(c) Services to be provided. In extraordinary circumstances, when a displaced person is not readily accessible, the Agency must make a good faith effort to comply with these sections and document its efforts in writing.

Section 24.204 Availability of comparable replacement dwelling before displacement.

Section 24.204(a) General. This provision requires that no one may be required to move from a dwelling without a comparable replacement dwelling having been made available. In addition, §24.204(a) requires that, ''where possible, three or more comparable replacement dwellings shall be made available.'' Thus, the basic standard for the number of referrals required under this section is three. Only in situations where three comparable replacement dwellings are not available (*e.g.*, when the local housing market

does not contain three comparable dwellings) may the Agency make fewer than three referrals.

Section 24.205 Relocation assistance advisory services. Section 24.205(c)(2)(ii)(D) emphasizes that if the comparable replacement dwellings are located in areas of minority concentration, minority persons should, if possible, also be given opportunities to relocate to replacement dwellings not located in such areas.

Section 24.206 Eviction for cause. An eviction related to non-compliance with a requirement related to carrying out a project (*e.g.*, failure to move or relocate when instructed, or to cooperate in the relocation process) shall not negate a person's entitlement to relocation payments and other assistance set forth in this part.

Section 24.207 General Requirements–Claims for relocation payments. Section 24.207(a) allows an Agency to make a payment for low cost or uncomplicated nonresidential moves without additional documentation, as long as the payment is limited to the amount of the lowest acceptable bid or estimate, as provided for in §24.301(d)(1).

While §24.207(f) prohibits an Agency from proposing or requesting that a displaced person waive his or her rights or entitlements to relocation assistance and payments, an Agency may accept a written statement from the displaced person that states that they have chosen not to accept some or all of the payments or assistance to which they are entitled. Any such written statement must clearly show that the individual knows what they are entitled to receive (a copy of the Notice of Eligibility which was provided may serve as documentation) and their statement must specifically identify which assistance or payments they have chosen not to accept. The statement must be signed and dated and may not be coerced by the Agency.

SUBPART D—PAYMENT FOR MOVING AND RELATED EXPENSES

Section 24.301. Payment for Actual Reasonable Moving and Related Expenses.

Section 24.301(e) Personal property only. Examples of personal property only moves might be: personal property that is located on a portion of property that is being acquired, but the business or residence will not be taken and can still operate after the acquisition; personal property that is located in a mini-storage facility that will be acquired or relocated; personal property that is stored on vacant land that is to be acquired.

For a nonresidential personal property only move, the owner of the personal property has the options of moving the personal property by using a commercial mover or a self-move.

If a question arises concerning the reasonableness of an actual cost move, the acquiring Agency may obtain estimates from qualified movers to use as the standard in determining the payment.

Section 24.301 (g)(14)(i) and (ii). If the piece of equipment is operational at the acquired site, the estimated cost to reconnect the equipment shall be based on the cost to install the equipment as it currently exists, and shall not include the cost of code-required betterments or upgrades that may apply at the replacement site. As prescribed in the regulation, the allowable in-place value estimate (§24.301(g)(14)(i)) and moving cost estimate (§24.301(g)(14)(ii)) must reflect only the ''as is'' condition and installation of the item at the displacement site. The in-place value estimate may not include costs that reflect code or other requirements that were not in effect at the displacement site; or include installation costs for machinery or equipment that is not operable or not installed at the displacement site.

Section 24.301(g)(17) Searching expenses. In special cases where the displacing Agency determines it to be reasonable and necessary, certain additional categories of searching costs may be considered for reimbursement. These include those costs involved in investigating potential replacement sites and the time of the business owner, based on salary or earnings, required to apply for licenses or permits, zoning changes, and attendance at zoning hearings. Necessary attorney fees required to obtain such licenses or permits are also reimbursable. Time spent in negotiating the purchase of a replacement business site is also reimbursable based on a reasonable salary or earnings rate. In those instances when such additional costs to investigate and acquire the site exceed $2,500, the displacing Agency may consider waiver of the cost limitation under the §24.7, waiver provision. Such a waiver should be subject to the approval of the Federal-funding Agency in accordance with existing delegation authority.

Section 24.303(b) Professional Services. If a question should arise as to what is a ''reasonable hourly rate,'' the Agency should compare the rates of other similar professional providers in that area.

Section 24.305 Fixed Payment for Moving Expenses—Nonresidential Moves.

Section 24.305(d) Nonprofit organization. Gross revenues may include membership fees, class fees, cash donations, tithes, receipts from sales or other forms of fund collection that enables the nonprofit organization to operate. Administrative expenses are those for administrative support such as rent, utilities, salaries, advertising, and other like items as well as fundraising expenses. Operating expenses for carrying out the purposes of the nonprofit organization are not included in administrative expenses. The monetary receipts and expense amounts may be verified with certified financial

statements or financial documents required by public Agencies.

Section 24.305(e) Average annual net earnings of a business or farm operation. If the average annual net earnings of the displaced business, farm, or nonprofit organization are determined to be less than $1,000, even $0 or a negative amount, the minimum payment of $1,000 shall be provided.

Section 24.306 Discretionary Utility Relocation Payments. Section 24.306(c) describes the issues that the Agency and the utility facility owner must agree to in determining the amount of the relocation payment. To facilitate and aid in reaching such agreement, the practices in the Federal Highway Administration regulation, 23 CFR part 645, subpart A, Utility Relocations, Adjustments and Reimbursement, should be followed.

SUBPART E—REPLACEMENT HOUSING PAYMENTS

Section 24.401 Replacement Housing Payment for 180-day Homeowner-Occupants.

Section 24.401(a)(2). An extension of eligibility may be granted if some event beyond the control of the displaced person such as acute or life threatening illness, bad weather preventing the completion of construction, or physical modifications required for reasonable accommodation of a replacement dwelling, or other like circumstances causes a delay in occupying a decent, safe, and sanitary replacement dwelling.

Section 24.401(c)(2)(iii) Price differential. The provision in §24.401(c)(2)(iii) to use the current fair market value for residential use does not mean the Agency must have the property appraised. Any reasonable method for arriving at the fair market value may be used.

Section 24.401(d) Increased mortgage interest costs. The provision in §24.401(d) sets forth the factors to be used in computing the payment that will be required to reduce a person's replacement mortgage (added to the downpayment) to an amount which can be amortized at the same monthly payment for principal and interest over the same period of time as the remaining term on the displacement mortgages. This payment is commonly known as the ''buydown.''

The Agency must know the remaining principal balance, the interest rate, and monthly principal and interest payments for the old mortgage as well as the interest rate, points and term for the new mortgage to compute the increased mortgage interest costs. If the combination of interest and points for the new mortgage exceeds the current prevailing fixed interest rate and points for conventional mortgages and there is no justification for the excessive rate, then the current prevailing fixed interest rate and points shall be used in the computations. Justification may be the unavailability of the current prevailing rate due to the amount of the new mortgage, credit difficulties, or other similar reasons.

SAMPLE COMPUTATION

Old Mortgage:	
Remaining Principal Balance	$50,000
Monthly Payment (principal and interest)	$458.22
Interest rate (percent)	7
New Mortgage:	
Interest rate (percent)	10
Points	3
Term (years)	15

Remaining term of the old mortgage is determined to be 174 months. Determining, or computing, the actual remaining term is more reliable than using the data supplied by the mortgagee. However, if it is shorter, use the term of the new mortgage and compute the needed monthly payment.

Amount to be financed to maintain monthly payments of $458.22 at 10% = $42,010.18.

Calculation:	
Remaining Principal Balance	$50,000.00
Minus Monthly Payment (principal and interest)	−42,010.18
Increased mortgage interest costs	7,989.82
3 points on $42,010.18	1,260.31
Total buydown necessary to maintain payments at $458.22/month	9,250.13

If the new mortgage actually obtained is less than the computed amount for a new mortgage ($42,010.18), the buydown shall be prorated accordingly. If the actual mortgage obtained in our example were $35,000, the buydown payment would be $7,706.57 ($35,000 divided by $42,010.18 = .8331; $9,250.13 multiplied by .83 = $7,706.57).

The Agency is obligated to inform the displaced person of the approximate amount of this payment and that the displaced person must obtain a mortgage of at least the same amount as the old mortgage and for at least the same term in order to receive the full amount of this payment. The Agency must advise the displaced person of the interest rate and points used to calculate the payment.

Section 24.402 Replacement Housing Payment for 90-day Occupants

Section 24.402(b)(2) Low income calculation example. The Uniform Act requires that an eligible displaced person who rents a replacement dwelling is entitled to a rental assistance payment calculated in accordance with §24.402(b). One factor in this calculation is to determine if a displaced person is ''low income,'' as defined by the U.S. Department of Housing and Urban Development's annual survey of income limits for the Public Housing and Section 8 Programs. To make such a determination, the Agency must: (1) Determine the total number of members in the

household (including all adults and children); (2) locate the appropriate table for income limits applicable to the Uniform Act for the state in which the displaced residence is located (found at: *http://www.fhwa.dot.gov/realestate/ua/ualic.htm*); (3) from the list of local jurisdictions shown, identify the appropriate county, Metropolitan Statistical Area (MSA)*, or Primary Metropolitan Statistical Area (PMSA)* in which the displacement property is located; and (4) locate the appropriate income limit in that jurisdiction for the size of this displaced person/family. The income limit must then be compared to the household income (§24.2(a)(15)) which is the gross annual income received by the displaced family, excluding income from any dependent children and full-time students under the age of 18. If the household income for the eligible displaced person/family is less than or equal to the income limit, the family is considered ''low income.'' For example:

Tom and Mary Smith and their three children are being displaced. The information obtained from the family and verified by the Agency is as follows:

Tom Smith, employed, earns $21,000/yr.

Mary Smith, receives disability payments of $6,000/yr.

Tom Smith Jr., 21, employed, earns $10,000/yr.

Mary Jane Smith, 17, student, has a paper route, earns $3,000/yr. (Income is not included because she is a dependent child and a full-time student under 18)

Sammie Smith, 10, full-time student, no income.

Total family income for 5 persons is: $21,000 + $6,000 + $10,000 = $37,000

The displacement residence is located in the State of Maryland, Caroline County. The low income limit for a 5 person household is: $47,450. (2004 Income Limits)

This household is considered ''low income.''

* A complete list of counties and towns included in the identified MSAs and PMSAs can be found under the bulleted item ''Income Limit Area Definition'' posted on the FHWA's Web site at: *http://www.fhwa.dot.gov/realestate/ua/ualic.htm.*

Section 24.402(c) Downpayment assistance. The downpayment assistance provisions in §24.402(c) limit such assistance to the amount of the computed rental assistance payment for a tenant or an eligible homeowner. It does, however, provide the latitude for Agency discretion in offering downpayment assistance that exceeds the computed rental assistance payment, up to the $5,250 statutory maximum. This does not mean, however, that such Agency discretion may be exercised in a selective or discriminatory fashion. The displacing Agency should develop a policy that affords equal treatment for displaced persons in like circumstances and this policy should be applied uniformly throughout the Agency's programs or projects.

For the purpose of this section, should the amount of the rental assistance payment exceed the purchase price of the replacement dwelling, the payment would be limited to the cost of the dwelling.

Section 24.404 Replacement Housing of Last Resort.

Section 24.404(b) Basic rights of persons to be displaced. This paragraph affirms the right of a 180-day homeowner-occupant, who is eligible for a replacement housing payment under §24.401, to a reasonable opportunity to purchase a comparable replacement dwelling. However, it should be read in conjunction with the definition of ''owner of a dwelling'' at §24.2(a)(20). The Agency is not required to provide persons owning only a fractional interest in the displacement dwelling a greater level of assistance to purchase a replacement dwelling than the Agency would be required to provide such persons if they owned fee simple title to the displacement dwelling. If such assistance is not sufficient to buy a replacement dwelling, the Agency may provide additional purchase assistance or rental assistance.

Section 24.404(c) Methods of providing comparable replacement housing. This Section emphasizes the use of cost effective means of providing comparable replacement housing. The term ''reasonable cost'' is used to highlight the fact that while innovative means to provide housing are encouraged, they should be cost-effective. Section 24.404(c)(2) permits the use of last resort housing, in special cases, which may involve variations from the usual methods of obtaining comparability. However, such variation should never result in a lowering of housing standards nor should it ever result in a lower quality of living style for the displaced person. The physical characteristics of the comparable replacement dwelling may be dissimilar to those of the displacement dwelling but they may never be inferior.

One example might be the use of a new mobile home to replace a very substandard conventional dwelling in an area where comparable conventional dwellings are not available.

Another example could be the use of a superior, but smaller, decent, safe and sanitary dwelling to replace a large, old substandard dwelling, only a portion of which is being used as living quarters by the occupants and no other large comparable dwellings are available in the area.

[70 FR 611, Jan. 4, 2005, as amended at 70 FR 22611, May 2, 2005]

APPENDIX B TO PART 24—STATISTICAL REPORT FORM

This Appendix sets forth the statistical information collected from Agencies in accordance with §24.9(c).

General

1. *Report coverage.* This report covers all relocation and real property acquisition activities under a Federal or a federally-assisted project or program subject to the provisions of the Uniform Act. If the exact numbers are not easily available, an Agency may provide what it believes to be a reasonable estimate.

2. *Report period.* Activities shall be reported on a Federal fiscal year basis, *i.e.*, October 1 through September 30.

3. *Where and when to submit report.* Submit a copy of this report to the lead Agency as soon as possible after September 30, but NOT LATER THAN NOVEMBER 15. Lead Agency address: Federal Highway Administration, Office of Real Estate Services (HEPR), 1200 New Jersey Avenue, SE., Washington, DC 20590.

4. *How to report relocation payments.* The full amount of a relocation payment shall be reported as if disbursed in the year during which the claim was approved, regardless of whether the payment is to be paid in installments.

5. *How to report dollar amounts.* Round off all money entries in Parts of this section A, B and C to the nearest dollar.

6. *Regulatory references.* The references in Parts A, B, C and D of this section indicate the subpart of the regulations pertaining to the requested information.

Part A. Real property acquisition under The Uniform Act

Line 1. Report all parcels acquired during the report year where title or possession was vested in the Agency during the reporting period. The parcel count reported should relate to ownerships and not to the number of parcels of different property interests (such as fee, perpetual easement, temporary easement, etc.) that may have been part of an acquisition from one owner. For example, an acquisition from a property that includes a fee simple parcel, a perpetual easement parcel, and a temporary easement parcel should be reported as 1 parcel not 3 parcels. (Include parcels acquired without Federal financial assistance, if there was or will be Federal financial assistance in other phases of the project or program.)

Line 2. Report the number of parcels reported on Line 1 that were acquired by condemnation. Include those parcels where compensation for the property was paid, deposited in court, or otherwise made available to a property owner pursuant to applicable law in order to vest title or possession in the Agency through condemnation authority.

Line 3. Report the number of parcels in Line 1 acquired through administrative settlement where the purchase price for the property exceeded the amount offered as just compensation and efforts to negotiate an agreement at that amount have failed.

Line 4. Report the total of the amounts paid, deposited in court, or otherwise made available to a property owner pursuant to applicable law in order to vest title or possession in the Agency in Line 1.

Part B. Residential Relocation Under the Uniform Act

Line 5. Report the number of households who were permanently displaced during the fiscal year by project or program activities and moved to their replacement dwelling. The term ''households'' includes all families and individuals. A family shall be reported as ''one'' household, *not* by the number of people in the family unit.

Line 6. Report the total amount paid for residential moving expenses (actual expense and fixed payment).

Line 7. Report the total amount paid for residential replacement housing payments including payments for replacement housing of last resort provided pursuant to §24.404 of this part.

Line 8. Report the number of households in Line 5 who were permanently displaced during the fiscal year by project or program activities and moved to their replacement dwelling as part of last resort housing assistance.

Line 9. Report the number of tenant households in Line 5 who were permanently displaced during the fiscal year by project or program activities, and who purchased and moved to their replacement dwelling using a downpayment assistance payment under this part.

Line 10. Report the total sum costs of residential relocation expenses and payments (excluding Agency administrative expenses) in Lines 6 and 7.

Part C. Nonresidential Relocation Under the Uniform Act

Line 11. Report the number of businesses, nonprofit organizations, and farms who were permanently displaced during the fiscal year by project or program activities and moved to their replacement location. This includes businesses, nonprofit organizations, and farms, that upon displacement, discontinued operations.

Line 12. Report the total amount paid for nonresidential moving expenses (actual expense and fixed payment.)

Line 13. Report the total amount paid for nonresidential reestablishment expenses.

Line 14. Report the total sum costs of nonresidential relocation expenses and payments (excluding Agency administrative expenses) in Lines 12 and 13.

Part D. Relocation Appeals

Line 15. Report the total number of relocation appeals filed during the fiscal year by aggrieved persons (residential and nonresidential).

FEDERAL FISCAL YEAR ENDING SEPT. 30, 20___
REPORTING AGENCY: _____
STATE: _____
CITY/COUNTY (For Local Government Agencies): _____
FEDERAL FUNDING AGENCY: _____

PART A. REAL PROPERTY ACQUISITION UNDER THE UNIFORM ACT	
1) Total Number of Parcels Acquired (Ownerships)	
2) Number of Parcels in Line 1 Acquired by Condemnation	
3) Number of Parcels in Line 1 Acquired by Administrative Settlement (Above initial offer –see 24.102(i))	
4) Compensation – Total Costs (Including 24.106; Excluding appraisal costs, negotiator fees and other administrative expenses)	
PART B. RESIDENTIAL RELOCATION UNDER THE UNIFORM ACT	
5) Total Number of Residential Displacements (Households)	
6) Residential Moving Payments – Total Costs	
7) Replacement Housing Payments – Total Costs	
8) Number of Last Resort Housing Displacements in Line 5 (Households)	
9) Number of Tenants converted to Homeowners in Line 5 (Households using 24.402(c))	
10) Total Costs for Residential Relocation Expenses and Payments (Sum of lines 6 and 7; excluding Agency Administrative Costs)	
PART C. NONRESIDENTIAL RELOCATION UNDER THE UNIFORM ACT	
11) Total Number of NonResidential Displacements	
12) NonResidential Moving Payments – Total Costs (Including 24.305)	
13) NonResidential Reestablishment Payments – Total Costs	
14) Total Costs for Nonresidential Relocation Expenses and Payments (Sum of lines 12 and 13; excluding Agency Administrative Costs)	
PART D. RELOCATION APPEALS UNDER THE UNIFORM ACT	
15) Total Number of Relocation Appeals (Residential & NonResidential)	

[70 FR 611, Jan. 4, 2005, as amended at 73 FR 33329, June 12, 2008]

PART 25—NONDISCRIMINATION ON THE BASIS OF SEX IN EDUCATION PROGRAMS OR ACTIVITIES RECEIVING FEDERAL FINANCIAL ASSISTANCE

Subpart A—Introduction

Sec.
25.100 Purpose and effective date.
25.105 Definitions.
25.110 Remedial and affirmative action and self-evaluation.
25.115 Assurance required.
25.120 Transfers of property.
25.125 Effect of other requirements.
25.130 Effect of employment opportunities.
25.135 Designation of responsible employee and adoption of grievance procedures.
25.140 Dissemination of policy.

Subpart B—Coverage

25.200 Application.
25.205 Educational institutions and other entities controlled by religious organizations.
25.210 Military and merchant marine educational institutions.
25.215 Membership practices of certain organizations.
25.220 Admissions.
25.225 Educational institutions eligible to submit transition plans.
25.230 Transition plans.
25.235 Statutory amendments.

Subpart C—Discrimination on the Basis of Sex in Admission and Recruitment Prohibited

25.300 Admission.
25.305 Preference in admission.
25.310 Recruitment.

Subpart D—Discrimination on the Basis of Sex in Education Programs or Activities Prohibited

25.400 Education programs or activities.
25.405 Housing.
25.410 Comparable facilities.
25.415 Access to course offerings.
25.420 Access to schools operated by LEAs.
25.425 Counseling and use of appraisal and counseling materials.
25.430 Financial assistance.
25.435 Employment assistance to students.
25.440 Health and insurance benefits and services.
25.445 Marital or parental status.
25.450 Athletics.
25.455 Textbooks and curricular material.

Subpart E—Discrimination on the Basis of Sex in Employment in Education Programs or Activities Prohibited

25.500 Employment.
25.505 Employment criteria.
25.510 Recruitment.
25.515 Compensation.
25.520 Job classification and structure.
25.525 Fringe benefits.
25.530 Marital or parental status.
25.535 Effect of state or local law or other requirements.
25.540 Advertising.
25.545 Pre-employment inquiries.
25.550 Sex as a bona fide occupational qualification.

Subpart F—Procedures

25.600 Notice of covered programs.
25.605 Enforcement procedures.

AUTHORITY: 20 U.S.C. 1681, 1682, 1683, 1685, 1686, 1687, 1688.

SOURCE: 65 FR 52865, 52894, Aug. 30, 2000, unless otherwise noted.

Subpart A—Introduction

§ 25.100 Purpose and effective date.

The purpose of these Title IX regulations is to effectuate Title IX of the Education Amendments of 1972, as amended (except sections 904 and 906 of those Amendments) (20 U.S.C. 1681, 1682, 1683, 1685, 1686, 1687, 1688), which is designed to eliminate (with certain exceptions) discrimination on the basis of sex in any education program or activity receiving Federal financial assistance, whether or not such program or activity is offered or sponsored by an educational institution as defined in these Title IX regulations. The effective date of these Title IX regulations shall be September 29, 2000.

§ 25.105 Definitions.

As used in these Title IX regulations, the term:

Administratively separate unit means a school, department, or college of an educational institution (other than a local educational agency) admission to which is independent of admission to any other component of such institution.

Admission means selection for part-time, full-time, special, associate,

transfer, exchange, or any other enrollment, membership, or matriculation in or at an education program or activity operated by a recipient.

Applicant means one who submits an application, request, or plan required to be approved by an official of the Federal agency that awards Federal financial assistance, or by a recipient, as a condition to becoming a recipient.

Designated agency official means Director, Departmental Office of Civil Rights.

Educational institution means a local educational agency (LEA) as defined by 20 U.S.C. 8801(18), a preschool, a private elementary or secondary school, or an applicant or recipient that is an institution of graduate higher education, an institution of undergraduate higher education, an institution of professional education, or an institution of vocational education, as defined in this section.

Federal financial assistance means any of the following, when authorized or extended under a law administered by the Federal agency that awards such assistance:

(1) A grant or loan of Federal financial assistance, including funds made available for:

(i) The acquisition, construction, renovation, restoration, or repair of a building or facility or any portion thereof; and

(ii) Scholarships, loans, grants, wages, or other funds extended to any entity for payment to or on behalf of students admitted to that entity, or extended directly to such students for payment to that entity.

(2) A grant of Federal real or personal property or any interest therein, including surplus property, and the proceeds of the sale or transfer of such property, if the Federal share of the fair market value of the property is not, upon such sale or transfer, properly accounted for to the Federal Government.

(3) Provision of the services of Federal personnel.

(4) Sale or lease of Federal property or any interest therein at nominal consideration, or at consideration reduced for the purpose of assisting the recipient or in recognition of public interest to be served thereby, or permission to use Federal property or any interest therein without consideration.

(5) Any other contract, agreement, or arrangement that has as one of its purposes the provision of assistance to any education program or activity, except a contract of insurance or guaranty.

Institution of graduate higher education means an institution that:

(1) Offers academic study beyond the bachelor of arts or bachelor of science degree, whether or not leading to a certificate of any higher degree in the liberal arts and sciences;

(2) Awards any degree in a professional field beyond the first professional degree (regardless of whether the first professional degree in such field is awarded by an institution of undergraduate higher education or professional education); or

(3) Awards no degree and offers no further academic study, but operates ordinarily for the purpose of facilitating research by persons who have received the highest graduate degree in any field of study.

Institution of professional education means an institution (except any institution of undergraduate higher education) that offers a program of academic study that leads to a first professional degree in a field for which there is a national specialized accrediting agency recognized by the Secretary of Education.

Institution of undergraduate higher education means:

(1) An institution offering at least two but less than four years of college-level study beyond the high school level, leading to a diploma or an associate degree, or wholly or principally creditable toward a baccalaureate degree; or

(2) An institution offering academic study leading to a baccalaureate degree; or

(3) An agency or body that certifies credentials or offers degrees, but that may or may not offer academic study.

Institution of vocational education means a school or institution (except an institution of professional or graduate or undergraduate higher education) that has as its primary purpose preparation of students to pursue a technical, skilled, or semiskilled occupation or trade, or to pursue study in a

technical field, whether or not the school or institution offers certificates, diplomas, or degrees and whether or not it offers full-time study.

Recipient means any State or political subdivision thereof, or any instrumentality of a State or political subdivision thereof, any public or private agency, institution, or organization, or other entity, or any person, to whom Federal financial assistance is extended directly or through another recipient and that operates an education program or activity that receives such assistance, including any subunit, successor, assignee, or transferee thereof.

Student means a person who has gained admission.

Title IX means Title IX of the Education Amendments of 1972, Public Law 92–318, 86 Stat. 235, 373 (codified as amended at 20 U.S.C. 1681–1688) (except sections 904 and 906 thereof), as amended by section 3 of Public Law 93–568, 88 Stat. 1855, by section 412 of the Education Amendments of 1976, Public Law 94–482, 90 Stat. 2234, and by Section 3 of Public Law 100–259, 102 Stat. 28, 28–29 (20 U.S.C. 1681, 1682, 1683, 1685, 1686, 1687, 1688).

Title IX regulations means the provisions set forth at §§ 25.100 through 25.605.

Transition plan means a plan subject to the approval of the Secretary of Education pursuant to section 901(a)(2) of the Education Amendments of 1972, 20 U.S.C. 1681(a)(2), under which an educational institution operates in making the transition from being an educational institution that admits only students of one sex to being one that admits students of both sexes without discrimination.

§ 25.110 Remedial and affirmative action and self-evaluation.

(a) *Remedial action.* If the designated agency official finds that a recipient has discriminated against persons on the basis of sex in an education program or activity, such recipient shall take such remedial action as the designated agency official deems necessary to overcome the effects of such discrimination.

(b) *Affirmative action.* In the absence of a finding of discrimination on the basis of sex in an education program or activity, a recipient may take affirmative action consistent with law to overcome the effects of conditions that resulted in limited participation therein by persons of a particular sex. Nothing in these Title IX regulations shall be interpreted to alter any affirmative action obligations that a recipient may have under Executive Order 11246, 3 CFR, 1964–1965 Comp., p. 339; as amended by Executive Order 11375, 3 CFR, 1966–1970 Comp., p. 684; as amended by Executive Order 11478, 3 CFR, 1966–1970 Comp., p. 803; as amended by Executive Order 12086, 3 CFR, 1978 Comp., p. 230; as amended by Executive Order 12107, 3 CFR, 1978 Comp., p. 264.

(c) *Self-evaluation.* Each recipient education institution shall, within one year of September 29, 2000:

(1) Evaluate, in terms of the requirements of these Title IX regulations, its current policies and practices and the effects thereof concerning admission of students, treatment of students, and employment of both academic and nonacademic personnel working in connection with the recipient's education program or activity;

(2) Modify any of these policies and practices that do not or may not meet the requirements of these Title IX regulations; and

(3) Take appropriate remedial steps to eliminate the effects of any discrimination that resulted or may have resulted from adherence to these policies and practices.

(d) *Availability of self-evaluation and related materials.* Recipients shall maintain on file for at least three years following completion of the evaluation required under paragraph (c) of this section, and shall provide to the designated agency official upon request, a description of any modifications made pursuant to paragraph (c)(2) of this section and of any remedial steps taken pursuant to paragraph (c)(3) of this section.

§ 25.115 Assurance required.

(a) *General.* Either at the application stage or the award stage, Federal agencies must ensure that applications for Federal financial assistance or awards of Federal financial assistance contain, be accompanied by, or be covered by a specifically identified assurance from

the applicant or recipient, satisfactory to the designated agency official, that each education program or activity operated by the applicant or recipient and to which these Title IX regulations apply will be operated in compliance with these Title IX regulations. An assurance of compliance with these Title IX regulations shall not be satisfactory to the designated agency official if the applicant or recipient to whom such assurance applies fails to commit itself to take whatever remedial action is necessary in accordance with §25.110(a) to eliminate existing discrimination on the basis of sex or to eliminate the effects of past discrimination whether occurring prior to or subsequent to the submission to the designated agency official of such assurance.

(b) *Duration of obligation.* (1) In the case of Federal financial assistance extended to provide real property or structures thereon, such assurance shall obligate the recipient or, in the case of a subsequent transfer, the transferee, for the period during which the real property or structures are used to provide an education program or activity.

(2) In the case of Federal financial assistance extended to provide personal property, such assurance shall obligate the recipient for the period during which it retains ownership or possession of the property.

(3) In all other cases such assurance shall obligate the recipient for the period during which Federal financial assistance is extended.

(c) *Form.* (1) The assurances required by paragraph (a) of this section, which may be included as part of a document that addresses other assurances or obligations, shall include that the applicant or recipient will comply with all applicable Federal statutes relating to nondiscrimination. These include but are not limited to: Title IX of the Education Amendments of 1972, as amended (20 U.S.C. 1681–1683, 1685–1688).

(2) The designated agency official will specify the extent to which such assurances will be required of the applicant's or recipient's subgrantees, contractors, subcontractors, transferees, or successors in interest.

§ 25.120 Transfers of property.

If a recipient sells or otherwise transfers property financed in whole or in part with Federal financial assistance to a transferee that operates any education program or activity, and the Federal share of the fair market value of the property is not upon such sale or transfer properly accounted for to the Federal Government, both the transferor and the transferee shall be deemed to be recipients, subject to the provisions of §§25.205 through 25.235(a).

§ 25.125 Effect of other requirements.

(a) *Effect of other Federal provisions.* The obligations imposed by these Title IX regulations are independent of, and do not alter, obligations not to discriminate on the basis of sex imposed by Executive Order 11246, 3 CFR, 1964–1965 Comp., p. 339; as amended by Executive Order 11375, 3 CFR, 1966–1970 Comp., p. 684; as amended by Executive Order 11478, 3 CFR, 1966–1970 Comp., p. 803; as amended by Executive Order 12087, 3 CFR, 1978 Comp., p. 230; as amended by Executive Order 12107, 3 CFR, 1978 Comp., p. 264; sections 704 and 855 of the Public Health Service Act (42 U.S.C. 295m, 298b-2); Title VII of the Civil Rights Act of 1964 (42 U.S.C. 2000e *et seq.*); the Equal Pay Act of 1963 (29 U.S.C. 206); and any other Act of Congress or Federal regulation.

(b) *Effect of State or local law or other requirements.* The obligation to comply with these Title IX regulations is not obviated or alleviated by any State or local law or other requirement that would render any applicant or student ineligible, or limit the eligibility of any applicant or student, on the basis of sex, to practice any occupation or profession.

(c) *Effect of rules or regulations of private organizations.* The obligation to comply with these Title IX regulations is not obviated or alleviated by any rule or regulation of any organization, club, athletic or other league, or association that would render any applicant or student ineligible to participate or limit the eligibility or participation of any applicant or student, on the basis of sex, in any education program or activity operated by a recipient and that receives Federal financial assistance.

§ 25.130 Effect of employment opportunities.

The obligation to comply with these Title IX regulations is not obviated or alleviated because employment opportunities in any occupation or profession are or may be more limited for members of one sex than for members of the other sex.

§ 25.135 Designation of responsible employee and adoption of grievance procedures.

(a) *Designation of responsible employee.* Each recipient shall designate at least one employee to coordinate its efforts to comply with and carry out its responsibilities under these Title IX regulations, including any investigation of any complaint communicated to such recipient alleging its noncompliance with these Title IX regulations or alleging any actions that would be prohibited by these Title IX regulations. The recipient shall notify all its students and employees of the name, office address, and telephone number of the employee or employees appointed pursuant to this paragraph.

(b) *Complaint procedure of recipient.* A recipient shall adopt and publish grievance procedures providing for prompt and equitable resolution of student and employee complaints alleging any action that would be prohibited by these Title IX regulations.

§ 25.140 Dissemination of policy.

(a) *Notification of policy.* (1) Each recipient shall implement specific and continuing steps to notify applicants for admission and employment, students and parents of elementary and secondary school students, employees, sources of referral of applicants for admission and employment, and all unions or professional organizations holding collective bargaining or professional agreements with the recipient, that it does not discriminate on the basis of sex in the educational programs or activities that it operates, and that it is required by Title IX and these Title IX regulations not to discriminate in such a manner. Such notification shall contain such information, and be made in such manner, as the designated agency official finds necessary to apprise such persons of the protections against discrimination assured them by Title IX and these Title IX regulations, but shall state at least that the requirement not to discriminate in education programs or activities extends to employment therein, and to admission thereto unless §§ 25.300 through 25.310 do not apply to the recipient, and that inquiries concerning the application of Title IX and these Title IX regulations to such recipient may be referred to the employee designated pursuant to § 25.135, or to the designated agency official.

(2) Each recipient shall make the initial notification required by paragraph (a)(1) of this section within 90 days of September 29, 2000 or of the date these Title IX regulations first apply to such recipient, whichever comes later, which notification shall include publication in:

(i) Newspapers and magazines operated by such recipient or by student, alumnae, or alumni groups for or in connection with such recipient; and

(ii) Memoranda or other written communications distributed to every student and employee of such recipient.

(b) *Publications.* (1) Each recipient shall prominently include a statement of the policy described in paragraph (a) of this section in each announcement, bulletin, catalog, or application form that it makes available to any person of a type, described in paragraph (a) of this section, or which is otherwise used in connection with the recruitment of students or employees.

(2) A recipient shall not use or distribute a publication of the type described in paragraph (b)(1) of this section that suggests, by text or illustration, that such recipient treats applicants, students, or employees differently on the basis of sex except as such treatment is permitted by these Title IX regulations.

(c) *Distribution.* Each recipient shall distribute without discrimination on the basis of sex each publication described in paragraph (b)(1) of this section, and shall apprise each of its admission and employment recruitment representatives of the policy of nondiscrimination described in paragraph (a) of this section, and shall require such representatives to adhere to such policy.

Subpart B—Coverage

§ 25.200 Application.

Except as provided in §§ 25.205 through 25.235(a), these Title IX regulations apply to every recipient and to each education program or activity operated by such recipient that receives Federal financial assistance.

§ 25.205 Educational institutions and other entities controlled by religious organizations.

(a) *Exemption.* These Title IX regulations do not apply to any operation of an educational institution or other entity that is controlled by a religious organization to the extent that application of these Title IX regulations would not be consistent with the religious tenets of such organization.

(b) *Exemption claims.* An educational institution or other entity that wishes to claim the exemption set forth in paragraph (a) of this section shall do so by submitting in writing to the designated agency official a statement by the highest-ranking official of the institution, identifying the provisions of these Title IX regulations that conflict with a specific tenet of the religious organization.

§ 25.210 Military and merchant marine educational institutions.

These Title IX regulations do not apply to an educational institution whose primary purpose is the training of individuals for a military service of the United States or for the merchant marine.

§ 25.215 Membership practices of certain organizations.

(a) *Social fraternities and sororities.* These Title IX regulations do not apply to the membership practices of social fraternities and sororities that are exempt from taxation under section 501(a) of the Internal Revenue Code of 1954, 26 U.S.C. 501(a), the active membership of which consists primarily of students in attendance at institutions of higher education.

(b) *YMCA, YWCA, Girl Scouts, Boy Scouts, and Camp Fire Girls.* These Title IX regulations do not apply to the membership practices of the Young Men's Christian Association (YMCA), the Young Women's Christian Association (YWCA), the Girl Scouts, the Boy Scouts, and Camp Fire Girls.

(c) *Voluntary youth service organizations.* These Title IX regulations do not apply to the membership practices of a voluntary youth service organization that is exempt from taxation under section 501(a) of the Internal Revenue Code of 1954, 26 U.S.C. 501(a), and the membership of which has been traditionally limited to members of one sex and principally to persons of less than nineteen years of age.

§ 25.220 Admissions.

(a) Admissions to educational institutions prior to June 24, 1973, are not covered by these Title IX regulations.

(b) *Administratively separate units.* For the purposes only of this section, §§ 25.225 and 25.230, and §§ 25.300 through 25.310, each administratively separate unit shall be deemed to be an educational institution.

(c) *Application of §§ 25.300 through .310.* Except as provided in paragraphs (d) and (e) of this section, §§ 25.300 through 25.310 apply to each recipient. A recipient to which §§ 25.300 through 25.310 apply shall not discriminate on the basis of sex in admission or recruitment in violation of §§ 25.300 through 25.310.

(d) *Educational institutions.* Except as provided in paragraph (e) of this section as to recipients that are educational institutions, §§ 25.300 through 25.310 apply only to institutions of vocational education, professional education, graduate higher education, and public institutions of undergraduate higher education.

(e) *Public institutions of undergraduate higher education.* §§ 25.300 through 25.310 do not apply to any public institution of undergraduate higher education that traditionally and continually from its establishment has had a policy of admitting students of only one sex.

§ 25.225 Educational institutions eligible to submit transition plans.

(a) *Application.* This section applies to each educational institution to which §§ 25.300 through 25.310 apply that:

(1) Admitted students of only one sex as regular students as of June 23, 1972; or

(2) Admitted students of only one sex as regular students as of June 23, 1965, but thereafter admitted, as regular students, students of the sex not admitted prior to June 23, 1965.

(b) *Provision for transition plans.* An educational institution to which this section applies shall not discriminate on the basis of sex in admission or recruitment in violation of §§ 25.300 through 25.310.

§ 25.230 Transition plans.

(a) *Submission of plans.* An institution to which § 25.225 applies and that is composed of more than one administratively separate unit may submit either a single transition plan applicable to all such units, or a separate transition plan applicable to each such unit.

(b) *Content of plans.* In order to be approved by the Secretary of Education, a transition plan shall:

(1) State the name, address, and Federal Interagency Committee on Education Code of the educational institution submitting such plan, the administratively separate units to which the plan is applicable, and the name, address, and telephone number of the person to whom questions concerning the plan may be addressed. The person who submits the plan shall be the chief administrator or president of the institution, or another individual legally authorized to bind the institution to all actions set forth in the plan.

(2) State whether the educational institution or administratively separate unit admits students of both sexes as regular students and, if so, when it began to do so.

(3) Identify and describe with respect to the educational institution or administratively separate unit any obstacles to admitting students without discrimination on the basis of sex.

(4) Describe in detail the steps necessary to eliminate as soon as practicable each obstacle so identified and indicate the schedule for taking these steps and the individual directly responsible for their implementation.

(5) Include estimates of the number of students, by sex, expected to apply for, be admitted to, and enter each class during the period covered by the plan.

(c) *Nondiscrimination.* No policy or practice of a recipient to which § 25.225 applies shall result in treatment of applicants to or students of such recipient in violation of §§ 25.300 through 25.310 unless such treatment is necessitated by an obstacle identified in paragraph (b)(3) of this section and a schedule for eliminating that obstacle has been provided as required by paragraph (b)(4) of this section.

(d) *Effects of past exclusion.* To overcome the effects of past exclusion of students on the basis of sex, each educational institution to which § 25.225 applies shall include in its transition plan, and shall implement, specific steps designed to encourage individuals of the previously excluded sex to apply for admission to such institution. Such steps shall include instituting recruitment programs that emphasize the institution's commitment to enrolling students of the sex previously excluded.

§ 25.235 Statutory amendments.

(a) This section, which applies to all provisions of these Title IX regulations, addresses statutory amendments to Title IX.

(b) These Title IX regulations shall not apply to or preclude:

(1) Any program or activity of the American Legion undertaken in connection with the organization or operation of any Boys State conference, Boys Nation conference, Girls State conference, or Girls Nation conference;

(2) Any program or activity of a secondary school or educational institution specifically for:

(i) The promotion of any Boys State conference, Boys Nation conference, Girls State conference, or Girls Nation conference; or

(ii) The selection of students to attend any such conference;

(3) Father-son or mother-daughter activities at an educational institution or in an education program or activity, but if such activities are provided for students of one sex, opportunities for reasonably comparable activities shall be provided to students of the other sex;

(4) Any scholarship or other financial assistance awarded by an institution of higher education to an individual because such individual has received such award in a single-sex pageant based upon a combination of factors related to the individual's personal appearance, poise, and talent. The pageant, however, must comply with other nondiscrimination provisions of Federal law.

(c) *Program or activity* or *program* means:

(1) All of the operations of any entity described in paragraphs (c)(1)(i) through (iv) of this section, any part of which is extended Federal financial assistance:

(i)(A) A department, agency, special purpose district, or other instrumentality of a State or of a local government; or

(B) The entity of such State or local government that distributes such assistance and each such department or agency (and each other State or local government entity) to which the assistance is extended, in the case of assistance to a State or local government;

(ii)(A) A college, university, or other postsecondary institution, or a public system of higher education; or

(B) A local educational agency (as defined in section 8801 of title 20), system of vocational education, or other school system;

(iii)(A) An entire corporation, partnership, or other private organization, or an entire sole proprietorship—

(*1*) If assistance is extended to such corporation, partnership, private organization, or sole proprietorship as a whole; or

(*2*) Which is principally engaged in the business of providing education, health care, housing, social services, or parks and recreation; or

(B) The entire plant or other comparable, geographically separate facility to which Federal financial assistance is extended, in the case of any other corporation, partnership, private organization, or sole proprietorship; or

(iv) Any other entity that is established by two or more of the entities described in paragraphs (c)(1)(i), (ii), or (iii) of this section.

(2)(i) *Program or activity* does not include any operation of an entity that is controlled by a religious organization if the application of 20 U.S.C. 1681 to such operation would not be consistent with the religious tenets of such organization.

(ii) For example, all of the operations of a college, university, or other postsecondary institution, including but not limited to traditional educational operations, faculty and student housing, campus shuttle bus service, campus restaurants, the bookstore, and other commercial activities are part of a ''program or activity'' subject to these Title IX regulations if the college, university, or other institution receives Federal financial assistance.

(d)(1) Nothing in these Title IX regulations shall be construed to require or prohibit any person, or public or private entity, to provide or pay for any benefit or service, including the use of facilities, related to an abortion. Medical procedures, benefits, services, and the use of facilities, necessary to save the life of a pregnant woman or to address complications related to an abortion are not subject to this section.

(2) Nothing in this section shall be construed to permit a penalty to be imposed on any person or individual because such person or individual is seeking or has received any benefit or service related to a legal abortion. Accordingly, subject to paragraph (d)(1) of this section, no person shall be excluded from participation in, be denied the benefits of, or be subjected to discrimination under any academic, extracurricular, research, occupational training, employment, or other educational program or activity operated by a recipient that receives Federal financial assistance because such individual has sought or received, or is seeking, a legal abortion, or any benefit or service related to a legal abortion.

Subpart C—Discrimination on the Basis of Sex in Admission and Recruitment Prohibited

§ 25.300 Admission.

(a) *General.* No person shall, on the basis of sex, be denied admission, or be

subjected to discrimination in admission, by any recipient to which §§ 25.300 through §§ 25.310 apply, except as provided in §§ 25.225 and §§ 25.230.

(b) *Specific prohibitions.* (1) In determining whether a person satisfies any policy or criterion for admission, or in making any offer of admission, a recipient to which §§ 25.300 through 25.310 apply shall not:

(i) Give preference to one person over another on the basis of sex, by ranking applicants separately on such basis, or otherwise;

(ii) Apply numerical limitations upon the number or proportion of persons of either sex who may be admitted; or

(iii) Otherwise treat one individual differently from another on the basis of sex.

(2) A recipient shall not administer or operate any test or other criterion for admission that has a disproportionately adverse effect on persons on the basis of sex unless the use of such test or criterion is shown to predict validly success in the education program or activity in question and alternative tests or criteria that do not have such a disproportionately adverse effect are shown to be unavailable.

(c) *Prohibitions relating to marital or parental status.* In determining whether a person satisfies any policy or criterion for admission, or in making any offer of admission, a recipient to which §§ 25.300 through 25.310 apply:

(1) Shall not apply any rule concerning the actual or potential parental, family, or marital status of a student or applicant that treats persons differently on the basis of sex;

(2) Shall not discriminate against or exclude any person on the basis of pregnancy, childbirth, termination of pregnancy, or recovery therefrom, or establish or follow any rule or practice that so discriminates or excludes;

(3) Subject to § 25.235(d), shall treat disabilities related to pregnancy, childbirth, termination of pregnancy, or recovery therefrom in the same manner and under the same policies as any other temporary disability or physical condition; and

(4) Shall not make pre-admission inquiry as to the marital status of an applicant for admission, including whether such applicant is ''Miss'' or ''Mrs.'' A recipient may make pre-admission inquiry as to the sex of an applicant for admission, but only if such inquiry is made equally of such applicants of both sexes and if the results of such inquiry are not used in connection with discrimination prohibited by these Title IX regulations.

§ 25.305 Preference in admission.

A recipient to which §§ 25.300 through 25.310 apply shall not give preference to applicants for admission, on the basis of attendance at any educational institution or other school or entity that admits as students only or predominantly members of one sex, if the giving of such preference has the effect of discriminating on the basis of sex in violation of §§ 25.300 through 25.310.

§ 25.310 Recruitment.

(a) *Nondiscriminatory recruitment.* A recipient to which §§ 25.300 through 25.310 apply shall not discriminate on the basis of sex in the recruitment and admission of students. A recipient may be required to undertake additional recruitment efforts for one sex as remedial action pursuant to § 25.110(a), and may choose to undertake such efforts as affirmative action pursuant to § 25.110(b).

(b) *Recruitment at certain institutions.* A recipient to which §§ 25.300 through 25.310 apply shall not recruit primarily or exclusively at educational institutions, schools, or entities that admit as students only or predominantly members of one sex, if such actions have the effect of discriminating on the basis of sex in violation of §§ 25.300 through 25.310.

Subpart D—Discrimination on the Basis of Sex in Education Programs or Activities Prohibited

§ 25.400 Education programs or activities.

(a) *General.* Except as provided elsewhere in these Title IX regulations, no person shall, on the basis of sex, be excluded from participation in, be denied the benefits of, or be subjected to discrimination under any academic, extracurricular, research, occupational training, or other education program or activity operated by a recipient that

receives Federal financial assistance. Sections 25.400 through 25.455 do not apply to actions of a recipient in connection with admission of its students to an education program or activity of a recipient to which §§ 25.300 through 25.310 do not apply, or an entity, not a recipient, to which §§ 25.300 through 25.310 would not apply if the entity were a recipient.

(b) *Specific prohibitions.* Except as provided in §§ 25.400 through 25.455, in providing any aid, benefit, or service to a student, a recipient shall not, on the basis of sex:

(1) Treat one person differently from another in determining whether such person satisfies any requirement or condition for the provision of such aid, benefit, or service;

(2) Provide different aid, benefits, or services or provide aid, benefits, or services in a different manner;

(3) Deny any person any such aid, benefit, or service;

(4) Subject any person to separate or different rules of behavior, sanctions, or other treatment;

(5) Apply any rule concerning the domicile or residence of a student or applicant, including eligibility for in-state fees and tuition;

(6) Aid or perpetuate discrimination against any person by providing significant assistance to any agency, organization, or person that discriminates on the basis of sex in providing any aid, benefit, or service to students or employees;

(7) Otherwise limit any person in the enjoyment of any right, privilege, advantage, or opportunity.

(c) *Assistance administered by a recipient educational institution to study at a foreign institution.* A recipient educational institution may administer or assist in the administration of scholarships, fellowships, or other awards established by foreign or domestic wills, trusts, or similar legal instruments, or by acts of foreign governments and restricted to members of one sex, that are designed to provide opportunities to study abroad, and that are awarded to students who are already matriculating at or who are graduates of the recipient institution; *Provided,* that a recipient educational institution that administers or assists in the administration of such scholarships, fellowships, or other awards that are restricted to members of one sex provides, or otherwise makes available, reasonable opportunities for similar studies for members of the other sex. Such opportunities may be derived from either domestic or foreign sources.

(d) *Aids, benefits or services not provided by recipient.* (1) This paragraph (d) applies to any recipient that requires participation by any applicant, student, or employee in any education program or activity not operated wholly by such recipient, or that facilitates, permits, or considers such participation as part of or equivalent to an education program or activity operated by such recipient, including participation in educational consortia and cooperative employment and student-teaching assignments.

(2) Such recipient:

(i) Shall develop and implement a procedure designed to assure itself that the operator or sponsor of such other education program or activity takes no action affecting any applicant, student, or employee of such recipient that these Title IX regulations would prohibit such recipient from taking; and

(ii) Shall not facilitate, require, permit, or consider such participation if such action occurs.

§ 25.405 Housing.

(a) *Generally.* A recipient shall not, on the basis of sex, apply different rules or regulations, impose different fees or requirements, or offer different services or benefits related to housing, except as provided in this section (including housing provided only to married students).

(b) *Housing provided by recipient.* (1) A recipient may provide separate housing on the basis of sex.

(2) Housing provided by a recipient to students of one sex, when compared to that provided to students of the other sex, shall be as a whole:

(i) Proportionate in quantity to the number of students of that sex applying for such housing; and

(ii) Comparable in quality and cost to the student.

(c) *Other housing.* (1) A recipient shall not, on the basis of sex, administer different policies or practices concerning occupancy by its students of housing other than that provided by such recipient.

(2)(i) A recipient which, through solicitation, listing, approval of housing, or otherwise, assists any agency, organization, or person in making housing available to any of its students, shall take such reasonable action as may be necessary to assure itself that such housing as is provided to students of one sex, when compared to that provided to students of the other sex, is as a whole:

(A) Proportionate in quantity; and

(B) Comparable in quality and cost to the student.

(ii) A recipient may render such assistance to any agency, organization, or person that provides all or part of such housing to students of only one sex.

§ 25.410 Comparable facilities.

A recipient may provide separate toilet, locker room, and shower facilities on the basis of sex, but such facilities provided for students of one sex shall be comparable to such facilities provided for students of the other sex.

§ 25.415 Access to course offerings.

(a) A recipient shall not provide any course or otherwise carry out any of its education program or activity separately on the basis of sex, or require or refuse participation therein by any of its students on such basis, including health, physical education, industrial, business, vocational, technical, home economics, music, and adult education courses.

(b)(1) With respect to classes and activities in physical education at the elementary school level, the recipient shall comply fully with this section as expeditiously as possible but in no event later than one year from September 29, 2000. With respect to physical education classes and activities at the secondary and post-secondary levels, the recipient shall comply fully with this section as expeditiously as possible but in no event later than three years from September 29, 2000.

(2) This section does not prohibit grouping of students in physical education classes and activities by ability as assessed by objective standards of individual performance developed and applied without regard to sex.

(3) This section does not prohibit separation of students by sex within physical education classes or activities during participation in wrestling, boxing, rugby, ice hockey, football, basketball, and other sports the purpose or major activity of which involves bodily contact.

(4) Where use of a single standard of measuring skill or progress in a physical education class has an adverse effect on members of one sex, the recipient shall use appropriate standards that do not have such effect.

(5) Portions of classes in elementary and secondary schools, or portions of education programs or activities, that deal exclusively with human sexuality may be conducted in separate sessions for boys and girls.

(6) Recipients may make requirements based on vocal range or quality that may result in a chorus or choruses of one or predominantly one sex.

§ 25.420 Access to schools operated by LEAs.

A recipient that is a local educational agency shall not, on the basis of sex, exclude any person from admission to:

(a) Any institution of vocational education operated by such recipient; or

(b) Any other school or educational unit operated by such recipient, unless such recipient otherwise makes available to such person, pursuant to the same policies and criteria of admission, courses, services, and facilities comparable to each course, service, and facility offered in or through such schools.

§ 25.425 Counseling and use of appraisal and counseling materials.

(a) *Counseling.* A recipient shall not discriminate against any person on the basis of sex in the counseling or guidance of students or applicants for admission.

(b) *Use of appraisal and counseling materials.* A recipient that uses testing or

other materials for appraising or counseling students shall not use different materials for students on the basis of their sex or use materials that permit or require different treatment of students on such basis unless such different materials cover the same occupations and interest areas and the use of such different materials is shown to be essential to eliminate sex bias. Recipients shall develop and use internal procedures for ensuring that such materials do not discriminate on the basis of sex. Where the use of a counseling test or other instrument results in a substantially disproportionate number of members of one sex in any particular course of study or classification, the recipient shall take such action as is necessary to assure itself that such disproportion is not the result of discrimination in the instrument or its application.

(c) *Disproportion in classes.* Where a recipient finds that a particular class contains a substantially disproportionate number of individuals of one sex, the recipient shall take such action as is necessary to assure itself that such disproportion is not the result of discrimination on the basis of sex in counseling or appraisal materials or by counselors.

§ 25.430 Financial assistance.

(a) *General.* Except as provided in paragraphs (b) and (c) of this section, in providing financial assistance to any of its students, a recipient shall not:

(1) On the basis of sex, provide different amounts or types of such assistance, limit eligibility for such assistance that is of any particular type or source, apply different criteria, or otherwise discriminate;

(2) Through solicitation, listing, approval, provision of facilities, or other services, assist any foundation, trust, agency, organization, or person that provides assistance to any of such recipient's students in a manner that discriminates on the basis of sex; or

(3) Apply any rule or assist in application of any rule concerning eligibility for such assistance that treats persons of one sex differently from persons of the other sex with regard to marital or parental status.

(b) *Financial aid established by certain legal instruments.* (1) A recipient may administer or assist in the administration of scholarships, fellowships, or other forms of financial assistance established pursuant to domestic or foreign wills, trusts, bequests, or similar legal instruments or by acts of a foreign government that require that awards be made to members of a particular sex specified therein; *Provided,* that the overall effect of the award of such sex-restricted scholarships, fellowships, and other forms of financial assistance does not discriminate on the basis of sex.

(2) To ensure nondiscriminatory awards of assistance as required in paragraph (b)(1) of this section, recipients shall develop and use procedures under which:

(i) Students are selected for award of financial assistance on the basis of nondiscriminatory criteria and not on the basis of availability of funds restricted to members of a particular sex;

(ii) An appropriate sex-restricted scholarship, fellowship, or other form of financial assistance is allocated to each student selected under paragraph (b)(2)(i) of this section; and

(iii) No student is denied the award for which he or she was selected under paragraph (b)(2)(i) of this section because of the absence of a scholarship, fellowship, or other form of financial assistance designated for a member of that student's sex.

(c) *Athletic scholarships.* (1) To the extent that a recipient awards athletic scholarships or grants-in-aid, it must provide reasonable opportunities for such awards for members of each sex in proportion to the number of students of each sex participating in interscholastic or intercollegiate athletics.

(2) A recipient may provide separate athletic scholarships or grants-in-aid for members of each sex as part of separate athletic teams for members of each sex to the extent consistent with this paragraph (c) and § 25.450.

§ 25.435 Employment assistance to students.

(a) *Assistance by recipient in making available outside employment.* A recipient that assists any agency, organization, or person in making employment available to any of its students:

(1) Shall assure itself that such employment is made available without discrimination on the basis of sex; and

(2) Shall not render such services to any agency, organization, or person that discriminates on the basis of sex in its employment practices.

(b) *Employment of students by recipients.* A recipient that employs any of its students shall not do so in a manner that violates §§ 25.500 through 25.550.

§ 25.440 Health and insurance benefits and services.

Subject to § 25.235(d), in providing a medical, hospital, accident, or life insurance benefit, service, policy, or plan to any of its students, a recipient shall not discriminate on the basis of sex, or provide such benefit, service, policy, or plan in a manner that would violate §§ 25.500 through 25.550 if it were provided to employees of the recipient. This section shall not prohibit a recipient from providing any benefit or service that may be used by a different proportion of students of one sex than of the other, including family planning services. However, any recipient that provides full coverage health service shall provide gynecological care.

§ 25.445 Marital or parental status.

(a) *Status generally.* A recipient shall not apply any rule concerning a student's actual or potential parental, family, or marital status that treats students differently on the basis of sex.

(b) *Pregnancy and related conditions.* (1) A recipient shall not discriminate against any student, or exclude any student from its education program or activity, including any class or extracurricular activity, on the basis of such student's pregnancy, childbirth, false pregnancy, termination of pregnancy, or recovery therefrom, unless the student requests voluntarily to participate in a separate portion of the program or activity of the recipient.

(2) A recipient may require such a student to obtain the certification of a physician that the student is physically and emotionally able to continue participation as long as such a certification is required of all students for other physical or emotional conditions requiring the attention of a physician.

(3) A recipient that operates a portion of its education program or activity separately for pregnant students, admittance to which is completely voluntary on the part of the student as provided in paragraph (b)(1) of this section, shall ensure that the separate portion is comparable to that offered to non-pregnant students.

(4) Subject to § 25.235(d), a recipient shall treat pregnancy, childbirth, false pregnancy, termination of pregnancy and recovery therefrom in the same manner and under the same policies as any other temporary disability with respect to any medical or hospital benefit, service, plan, or policy that such recipient administers, operates, offers, or participates in with respect to students admitted to the recipient's educational program or activity.

(5) In the case of a recipient that does not maintain a leave policy for its students, or in the case of a student who does not otherwise qualify for leave under such a policy, a recipient shall treat pregnancy, childbirth, false pregnancy, termination of pregnancy, and recovery therefrom as a justification for a leave of absence for as long a period of time as is deemed medically necessary by the student's physician, at the conclusion of which the student shall be reinstated to the status that she held when the leave began.

§ 25.450 Athletics.

(a) *General.* No person shall, on the basis of sex, be excluded from participation in, be denied the benefits of, be treated differently from another person, or otherwise be discriminated against in any interscholastic, intercollegiate, club, or intramural athletics offered by a recipient, and no recipient shall provide any such athletics separately on such basis.

(b) *Separate teams.* Notwithstanding the requirements of paragraph (a) of this section, a recipient may operate or sponsor separate teams for members of each sex where selection for such teams is based upon competitive skill

or the activity involved is a contact sport. However, where a recipient operates or sponsors a team in a particular sport for members of one sex but operates or sponsors no such team for members of the other sex, and athletic opportunities for members of that sex have previously been limited, members of the excluded sex must be allowed to try out for the team offered unless the sport involved is a contact sport. For the purposes of these Title IX regulations, contact sports include boxing, wrestling, rugby, ice hockey, football, basketball, and other sports the purpose or major activity of which involves bodily contact.

(c) *Equal opportunity.* (1) A recipient that operates or sponsors interscholastic, intercollegiate, club, or intramural athletics shall provide equal athletic opportunity for members of both sexes. In determining whether equal opportunities are available, the designated agency official will consider, among other factors:

(i) Whether the selection of sports and levels of competition effectively accommodate the interests and abilities of members of both sexes;

(ii) The provision of equipment and supplies;

(iii) Scheduling of games and practice time;

(iv) Travel and per diem allowance;

(v) Opportunity to receive coaching and academic tutoring;

(vi) Assignment and compensation of coaches and tutors;

(vii) Provision of locker rooms, practice, and competitive facilities;

(viii) Provision of medical and training facilities and services;

(ix) Provision of housing and dining facilities and services;

(x) Publicity.

(2) For purposes of paragraph (c)(1) of this section, unequal aggregate expenditures for members of each sex or unequal expenditures for male and female teams if a recipient operates or sponsors separate teams will not constitute noncompliance with this section, but the designated agency official may consider the failure to provide necessary funds for teams for one sex in assessing equality of opportunity for members of each sex.

(d) *Adjustment period.* A recipient that operates or sponsors interscholastic, intercollegiate, club, or intramural athletics at the elementary school level shall comply fully with this section as expeditiously as possible but in no event later than one year from September 29, 2000. A recipient that operates or sponsors interscholastic, intercollegiate, club, or intramural athletics at the secondary or postsecondary school level shall comply fully with this section as expeditiously as possible but in no event later than three years from September 29, 2000.

§ 25.455 Textbooks and curricular material.

Nothing in these Title IX regulations shall be interpreted as requiring or prohibiting or abridging in any way the use of particular textbooks or curricular materials.

Subpart E—Discrimination on the Basis of Sex in Employment in Education Programs or Activities Prohibited

§ 25.500 Employment.

(a) *General.* (1) No person shall, on the basis of sex, be excluded from participation in, be denied the benefits of, or be subjected to discrimination in employment, or recruitment, consideration, or selection therefor, whether full-time or part-time, under any education program or activity operated by a recipient that receives Federal financial assistance.

(2) A recipient shall make all employment decisions in any education program or activity operated by such recipient in a nondiscriminatory manner and shall not limit, segregate, or classify applicants or employees in any way that could adversely affect any applicant's or employee's employment opportunities or status because of sex.

(3) A recipient shall not enter into any contractual or other relationship which directly or indirectly has the effect of subjecting employees or students to discrimination prohibited by §§ 25.500 through 25.550, including relationships with employment and referral agencies, with labor unions, and

with organizations providing or administering fringe benefits to employees of the recipient.

(4) A recipient shall not grant preferences to applicants for employment on the basis of attendance at any educational institution or entity that admits as students only or predominantly members of one sex, if the giving of such preferences has the effect of discriminating on the basis of sex in violation of these Title IX regulations.

(b) *Application.* The provisions of §§ 25.500 through 25.550 apply to:

(1) Recruitment, advertising, and the process of application for employment;

(2) Hiring, upgrading, promotion, consideration for and award of tenure, demotion, transfer, layoff, termination, application of nepotism policies, right of return from layoff, and rehiring;

(3) Rates of pay or any other form of compensation, and changes in compensation;

(4) Job assignments, classifications, and structure, including position descriptions, lines of progression, and seniority lists;

(5) The terms of any collective bargaining agreement;

(6) Granting and return from leaves of absence, leave for pregnancy, childbirth, false pregnancy, termination of pregnancy, leave for persons of either sex to care for children or dependents, or any other leave;

(7) Fringe benefits available by virtue of employment, whether or not administered by the recipient;

(8) Selection and financial support for training, including apprenticeship, professional meetings, conferences, and other related activities, selection for tuition assistance, selection for sabbaticals and leaves of absence to pursue training;

(9) Employer-sponsored activities, including social or recreational programs; and

(10) Any other term, condition, or privilege of employment.

§ 25.505 Employment criteria.

A recipient shall not administer or operate any test or other criterion for any employment opportunity that has a disproportionately adverse effect on persons on the basis of sex unless:

(a) Use of such test or other criterion is shown to predict validly successful performance in the position in question; and

(b) Alternative tests or criteria for such purpose, which do not have such disproportionately adverse effect, are shown to be unavailable.

§ 25.510 Recruitment.

(a) *Nondiscriminatory recruitment and hiring.* A recipient shall not discriminate on the basis of sex in the recruitment and hiring of employees. Where a recipient has been found to be presently discriminating on the basis of sex in the recruitment or hiring of employees, or has been found to have so discriminated in the past, the recipient shall recruit members of the sex so discriminated against so as to overcome the effects of such past or present discrimination.

(b) *Recruitment patterns.* A recipient shall not recruit primarily or exclusively at entities that furnish as applicants only or predominantly members of one sex if such actions have the effect of discriminating on the basis of sex in violation of §§ 25.500 through 25.550.

§ 25.515 Compensation.

A recipient shall not make or enforce any policy or practice that, on the basis of sex:

(a) Makes distinctions in rates of pay or other compensation;

(b) Results in the payment of wages to employees of one sex at a rate less than that paid to employees of the opposite sex for equal work on jobs the performance of which requires equal skill, effort, and responsibility, and that are performed under similar working conditions.

§ 25.520 Job classification and structure.

A recipient shall not:

(a) Classify a job as being for males or for females;

(b) Maintain or establish separate lines of progression, seniority lists, career ladders, or tenure systems based on sex; or

(c) Maintain or establish separate lines of progression, seniority systems, career ladders, or tenure systems for

similar jobs, position descriptions, or job requirements that classify persons on the basis of sex, unless sex is a bona fide occupational qualification for the positions in question as set forth in § 25.550.

§ 25.525 Fringe benefits.

(a) *''Fringe benefits'' defined.* For purposes of these Title IX regulations, *fringe benefits* means: Any medical, hospital, accident, life insurance, or retirement benefit, service, policy or plan, any profit-sharing or bonus plan, leave, and any other benefit or service of employment not subject to the provision of § 25.515.

(b) *Prohibitions.* A recipient shall not:

(1) Discriminate on the basis of sex with regard to making fringe benefits available to employees or make fringe benefits available to spouses, families, or dependents of employees differently upon the basis of the employee's sex;

(2) Administer, operate, offer, or participate in a fringe benefit plan that does not provide for equal periodic benefits for members of each sex and for equal contributions to the plan by such recipient for members of each sex; or

(3) Administer, operate, offer, or participate in a pension or retirement plan that establishes different optional or compulsory retirement ages based on sex or that otherwise discriminates in benefits on the basis of sex.

§ 25.530 Marital or parental status.

(a) *General.* A recipient shall not apply any policy or take any employment action:

(1) Concerning the potential marital, parental, or family status of an employee or applicant for employment that treats persons differently on the basis of sex; or

(2) Which is based upon whether an employee or applicant for employment is the head of household or principal wage earner in such employee's or applicant's family unit.

(b) *Pregnancy.* A recipient shall not discriminate against or exclude from employment any employee or applicant for employment on the basis of pregnancy, childbirth, false pregnancy, termination of pregnancy, or recovery therefrom.

(c) *Pregnancy as a temporary disability.* Subject to § 25.235(d), a recipient shall treat pregnancy, childbirth, false pregnancy, termination of pregnancy, recovery therefrom, and any temporary disability resulting therefrom as any other temporary disability for all job-related purposes, including commencement, duration, and extensions of leave, payment of disability income, accrual of seniority and any other benefit or service, and reinstatement, and under any fringe benefit offered to employees by virtue of employment.

(d) *Pregnancy leave.* In the case of a recipient that does not maintain a leave policy for its employees, or in the case of an employee with insufficient leave or accrued employment time to qualify for leave under such a policy, a recipient shall treat pregnancy, childbirth, false pregnancy, termination of pregnancy, and recovery therefrom as a justification for a leave of absence without pay for a reasonable period of time, at the conclusion of which the employee shall be reinstated to the status that she held when the leave began or to a comparable position, without decrease in rate of compensation or loss of promotional opportunities, or any other right or privilege of employment.

§ 25.535 Effect of state or local law or other requirements.

(a) *Prohibitory requirements.* The obligation to comply with §§ 25.500 through 25.550 is not obviated or alleviated by the existence of any State or local law or other requirement that imposes prohibitions or limits upon employment of members of one sex that are not imposed upon members of the other sex.

(b) *Benefits.* A recipient that provides any compensation, service, or benefit to members of one sex pursuant to a State or local law or other requirement shall provide the same compensation, service, or benefit to members of the other sex.

§ 25.540 Advertising.

A recipient shall not in any advertising related to employment indicate preference, limitation, specification, or discrimination based on sex unless sex is a bona fide occupational qualification for the particular job in question.

§ 25.545 Pre-employment inquiries.

(a) *Marital status.* A recipient shall not make pre-employment inquiry as to the marital status of an applicant for employment, including whether such applicant is ''Miss'' or ''Mrs.''

(b) *Sex.* A recipient may make pre-employment inquiry as to the sex of an applicant for employment, but only if such inquiry is made equally of such applicants of both sexes and if the results of such inquiry are not used in connection with discrimination prohibited by these Title IX regulations.

§ 25.550 Sex as a bona fide occupational qualification.

A recipient may take action otherwise prohibited by §§ 25.500 through 25.550 provided it is shown that sex is a bona fide occupational qualification for that action, such that consideration of sex with regard to such action is essential to successful operation of the employment function concerned. A recipient shall not take action pursuant to this section that is based upon alleged comparative employment characteristics or stereotyped characterizations of one or the other sex, or upon preference based on sex of the recipient, employees, students, or other persons, but nothing contained in this section shall prevent a recipient from considering an employee's sex in relation to employment in a locker room or toilet facility used only by members of one sex.

Subpart F—Procedures

§ 25.600 Notice of covered programs.

Within 60 days of September 29, 2000, each Federal agency that awards Federal financial assistance shall publish in the FEDERAL REGISTER a notice of the programs covered by these Title IX regulations. Each such Federal agency shall periodically republish the notice of covered programs to reflect changes in covered programs. Copies of this notice also shall be made available upon request to the Federal agency's office that enforces Title IX.

§ 25.605 Enforcement procedures.

The investigative, compliance, and enforcement procedural provisions of Title VI of the Civil Rights Act of 1964 (42 U.S.C. 2000d) (''Title VI'') are hereby adopted and applied to these Title IX regulations. These procedures may be found at 49 CFR part 21.

[65 FR 52895, Aug. 30, 2000]

PART 26—PARTICIPATION BY DISADVANTAGED BUSINESS ENTERPRISES IN DEPARTMENT OF TRANSPORTATION FINANCIAL ASSISTANCE PROGRAMS

Subpart A—General

Sec.

26.1 What are the objectives of this part?
26.3 To whom does this part apply?
26.5 What do the terms used in this part mean?
26.7 What discriminatory actions are forbidden?
26.9 How does the Department issue guidance and interpretations under this part?
26.11 What records do recipients keep and report?
26.13 What assurances must recipients and contractors make?
26.15 How can recipients apply for exemptions or waivers?

Subpart B—Administrative Requirements for DBE Programs for Federally-Assisted Contracting

26.21 Who must have a DBE program?
26.23 What is the requirement for a policy statement?
26.25 What is the requirement for a liaison officer?
26.27 What efforts must recipients make concerning DBE financial institutions?
26.29 What prompt payment mechanisms must recipients have?
26.31 What requirements pertain to the DBE directory?
26.33 What steps must a recipient take to address overconcentration of DBEs in certain types of work?
26.35 What role do business development and mentor-protégé programs have in the DBE program?
26.37 What are a recipient's responsibilities for monitoring the performance of other program participants?

Subpart C—Goals, Good Faith Efforts, and Counting

26.41 What is the role of the statutory 10 percent goal in this program?
26.43 Can recipients use set-asides or quotas as part of this program?
26.45 How do recipients set overall goals?

26.47 Can recipients be penalized for failing to meet overall goals?
26.49 How are overall goals established for transit vehicle manufacturers?
26.51 What means do recipients use to meet overall goals?
26.53 What are the good faith efforts procedures recipients follow in situations where there are contract goals?
26.55 How is DBE participation counted toward goals?

Subpart D—Certification Standards

26.61 How are burdens of proof allocated in the certification process?
26.63 What rules govern group membership determinations?
26.65 What rules govern business size determinations?
26.67 What rules determine social and economic disadvantage?
26.69 What rules govern determinations of ownership?
26.71 What rules govern determinations concerning control?
26.73 What are other rules affecting certification?

Subpart E—Certification Procedures

26.81 What are the requirements for Unified Certification Programs?
26.83 What procedures do recipients follow in making certification decisions?
26.84 How do recipients process applications submitted pursuant to the DOT/SBA MOU?
26.85 How do recipients respond to requests from DBE-certified firms or the SBA made pursuant to the DOT/SBA MOU?
26.86 What rules govern recipients' denials of initial requests for certification?
26.87 What procedures does a recipient use to remove a DBE's eligibility?
26.89 What is the process for certification appeals to the Department of Transportation?
26.91 What actions do recipients take following DOT certification appeal decisions?

Subpart F—Compliance and Enforcement

26.101 What compliance procedures apply to recipients?
26.103 What enforcement actions apply in FHWA and FTA programs?
26.105 What enforcement actions apply in FAA programs?
26.107 What enforcement actions apply to firms participating in the DBE program?
26.109 What are the rules governing information, confidentiality, cooperation, and intimidation or retaliation?

APPENDIX A TO PART 26—GUIDANCE CONCERNING GOOD FAITH EFFORTS

APPENDIX B TO PART 26—UNIFORM REPORT OF DBE AWARDS OR COMMITMENTS AND PAYMENTS FORM

APPENDIX C TO PART 26—DBE BUSINESS DEVELOPMENT PROGRAM GUIDELINES

APPENDIX D TO PART 26—MENTOR-PROTÉGÉ PROGRAM GUIDELINES

APPENDIX E TO PART 26—INDIVIDUAL DETERMINATIONS OF SOCIAL AND ECONOMIC DISADVANTAGE

APPENDIX F TO PART 26—UNIFORM CERTIFICATION APPLICATION FORM

AUTHORITY: 23 U.S.C. 324; 42 U.S.C. 2000d, *et seq.*; 49 U.S.C 1615, 47107, 47113, 47123; Sec. 1101(b), Pub. L. 105–178, 112 Stat. 107, 113.

SOURCE: 64 FR 5126, Feb. 2, 1999, unless otherwise noted.

Subpart A—General

§ 26.1 What are the objectives of this part?

This part seeks to achieve several objectives:

(a) To ensure nondiscrimination in the award and administration of DOT-assisted contracts in the Department's highway, transit, and airport financial assistance programs;

(b) To create a level playing field on which DBEs can compete fairly for DOT-assisted contracts;

(c) To ensure that the Department's DBE program is narrowly tailored in accordance with applicable law;

(d) To ensure that only firms that fully meet this part's eligibility standards are permitted to participate as DBEs;

(e) To help remove barriers to the participation of DBEs in DOT-assisted contracts;

(f) To assist the development of firms that can compete successfully in the marketplace outside the DBE program; and

(g) To provide appropriate flexibility to recipients of Federal financial assistance in establishing and providing opportunities for DBEs.

§ 26.3 To whom does this part apply?

(a) If you are a recipient of any of the following types of funds, this part applies to you:

(1) Federal-aid highway funds authorized under Titles I (other than Part B) and V of the Intermodal Surface Transportation Efficiency Act of 1991 (ISTEA), Pub. L. 102–240, 105 Stat. 1914,

or Titles I, III, and V of the Transportation Equity Act for the 21st Century (TEA–21), Pub. L. 105–178, 112 Stat. 107.

(2) Federal transit funds authorized by Titles I, III, V and VI of ISTEA, Pub. L. 102–240 or by Federal transit laws in Title 49, U.S. Code, or Titles I, III, and V of the TEA–21, Pub. L. 105–178.

(3) Airport funds authorized by 49 U.S.C. 47101, *et seq*.

(b) [Reserved]

(c) If you are letting a contract, and that contract is to be performed entirely outside the United States, its territories and possessions, Puerto Rico, Guam, or the Northern Marianas Islands, this part does not apply to the contract.

(d) If you are letting a contract in which DOT financial assistance does not participate, this part does not apply to the contract.

§ 26.5 What do the terms used in this part mean?

Affiliation has the same meaning the term has in the Small Business Administration (SBA) regulations, 13 CFR part 121.

(1) Except as otherwise provided in 13 CFR part 121, concerns are affiliates of each other when, either directly or indirectly:

(i) One concern controls or has the power to control the other; or

(ii) A third party or parties controls or has the power to control both; or

(iii) An identity of interest between or among parties exists such that affiliation may be found.

(2) In determining whether affiliation exists, it is necessary to consider all appropriate factors, including common ownership, common management, and contractual relationships. Affiliates must be considered together in determining whether a concern meets small business size criteria and the statutory cap on the participation of firms in the DBE program.

Alaska Native means a citizen of the United States who is a person of one-fourth degree or more Alaskan Indian (including Tsimshian Indians not enrolled in the Metlaktla Indian Community), Eskimo, or Aleut blood, or a combination of those bloodlines. The term includes, in the absence of proof of a minimum blood quantum, any citizen whom a Native village or Native group regards as an Alaska Native if their father or mother is regarded as an Alaska Native.

Alaska Native Corporation (ANC) means any Regional Corporation, Village Corporation, Urban Corporation, or Group Corporation organized under the laws of the State of Alaska in accordance with the Alaska Native Claims Settlement Act, as amended (43 U.S.C. 1601, *et seq*.).

Compliance means that a recipient has correctly implemented the requirements of this part.

Contract means a legally binding relationship obligating a seller to furnish supplies or services (including, but not limited to, construction and professional services) and the buyer to pay for them. For purposes of this part, a lease is considered to be a contract.

Contractor means one who participates, through a contract or subcontract (at any tier), in a DOT-assisted highway, transit, or airport program.

Department or *DOT* means the U.S. Department of Transportation, including the Office of the Secretary, the Federal Highway Administration (FHWA), the Federal Transit Administration (FTA), and the Federal Aviation Administration (FAA).

Disadvantaged business enterprise or *DBE* means a for-profit small business concern—

(1) That is at least 51 percent owned by one or more individuals who are both socially and economically disadvantaged or, in the case of a corporation, in which 51 percent of the stock is owned by one or more such individuals; and

(2) Whose management and daily business operations are controlled by one or more of the socially and economically disadvantaged individuals who own it.

DOT-assisted contract means any contract between a recipient and a contractor (at any tier) funded in whole or in part with DOT financial assistance, including letters of credit or loan guarantees, except a contract solely for the purchase of land.

DOT/SBA Memorandum of Understanding or MOU, refers to the agreement signed on November 23, 1999, between the Department of Transportation (DOT) and the Small Business Administration (SBA) streamlining certification procedures for participation in SBA's 8(a) Business Development (8(a) BD) and Small Disadvantaged Business (SDB) programs, and DOT's Disadvantaged Business Enterprise (DBE) program for small and disadvantaged businesses.

Good faith efforts means efforts to achieve a DBE goal or other requirement of this part which, by their scope, intensity, and appropriateness to the objective, can reasonably be expected to fulfill the program requirement.

Immediate family member means father, mother, husband, wife, son, daughter, brother, sister, grandmother, grandfather, grandson, granddaughter, mother-in-law, or father-in-law.

Indian tribe means any Indian tribe, band, nation, or other organized group or community of Indians, including any ANC, which is recognized as eligible for the special programs and services provided by the United States to Indians because of their status as Indians, or is recognized as such by the State in which the tribe, band, nation, group, or community resides. See definition of ''tribally-owned concern'' in this section.

Joint venture means an association of a DBE firm and one or more other firms to carry out a single, for-profit business enterprise, for which the parties combine their property, capital, efforts, skills and knowledge, and in which the DBE is responsible for a distinct, clearly defined portion of the work of the contract and whose share in the capital contribution, control, management, risks, and profits of the joint venture are commensurate with its ownership interest.

Native Hawaiian means any individual whose ancestors were natives, prior to 1778, of the area which now comprises the State of Hawaii.

Native Hawaiian Organization means any community service organization serving Native Hawaiians in the State of Hawaii which is a not-for-profit organization chartered by the State of Hawaii, is controlled by Native Hawaiians, and whose business activities will principally benefit such Native Hawaiians.

Noncompliance means that a recipient has not correctly implemented the requirements of this part.

Operating Administration or *OA* means any of the following parts of DOT: the Federal Aviation Administration (FAA), Federal Highway Administration (FHWA), and Federal Transit Administration (FTA). The ''Administrator'' of an operating administration includes his or her designees.

Personal net worth means the net value of the assets of an individual remaining after total liabilities are deducted. An individual's personal net worth does not include: The individual's ownership interest in an applicant or participating DBE firm; or the individual's equity in his or her primary place of residence. An individual's personal net worth includes only his or her own share of assets held jointly or as community property with the individual's spouse.

Primary industry classification means the North American Industrial Classification System (NAICS) designation which best describes the primary business of a firm. The NAICS is described in the *North American Industry Classification Manual—United States, 1997* which is available from the National Technical Information Service, 5285 Port Royal Road, Springfield, VA, 22161; by calling 1 (800) 553–6847; or via the Internet at: *http://www.ntis.gov/product/naics.htm.*

Primary recipient means a recipient which receives DOT financial assistance and passes some or all of it on to another recipient.

Principal place of business means the business location where the individuals who manage the firm's day-to-day operations spend most working hours and where top management's business records are kept. If the offices from which management is directed and where business records are kept are in different locations, the recipient will determine the principal place of business for DBE program purposes.

Program means any undertaking on a recipient's part to use DOT financial assistance, authorized by the laws to which this part applies.

Race-conscious measure or program is one that is focused specifically on assisting only DBEs, including women-owned DBEs.

Race-neutral measure or program is one that is, or can be, used to assist all small businesses. For the purposes of this part, *race-neutral* includes gender-neutrality.

Recipient is any entity, public or private, to which DOT financial assistance is extended, whether directly or through another recipient, through the programs of the FAA, FHWA, or FTA, or who has applied for such assistance.

Secretary means the Secretary of Transportation or his/her designee.

Set-aside means a contracting practice restricting eligibility for the competitive award of a contract solely to DBE firms.

Small Business Administration or *SBA* means the United States Small Business Administration.

SBA certified firm refers to firms that have a current, valid certification from or recognized by the SBA under the 8(a) BD or SDB programs.

Small business concern means, with respect to firms seeking to participate as DBEs in DOT-assisted contracts, a small business concern as defined pursuant to section 3 of the Small Business Act and Small Business Administration regulations implementing it (13 CFR part 121) that also does not exceed the cap on average annual gross receipts specified in §26.65(b).

Socially and economically disadvantaged individual means any individual who is a citizen (or lawfully admitted permanent resident) of the United States and who is—

(1) Any individual who a recipient finds to be a socially and economically disadvantaged individual on a case-by-case basis.

(2) Any individual in the following groups, members of which are rebuttably presumed to be socially and economically disadvantaged:

(i) ''Black Americans,'' which includes persons having origins in any of the Black racial groups of Africa;

(ii) ''Hispanic Americans,'' which includes persons of Mexican, Puerto Rican, Cuban, Dominican, Central or South American, or other Spanish or Portuguese culture or origin, regardless of race;

(iii) ''Native Americans,'' which includes persons who are American Indians, Eskimos, Aleuts, or Native Hawaiians;

(iv) ''Asian-Pacific Americans,'' which includes persons whose origins are from Japan, China, Taiwan, Korea, Burma (Myanmar), Vietnam, Laos, Cambodia (Kampuchea), Thailand, Malaysia, Indonesia, the Philippines, Brunei, Samoa, Guam, the U.S. Trust Territories of the Pacific Islands (Republic of Palau), the Commonwealth of the Northern Marianas Islands, Macao, Fiji, Tonga, Kirbati, Juvalu, Nauru, Federated States of Micronesia, or Hong Kong;

(v) ''Subcontinent Asian Americans,'' which includes persons whose origins are from India, Pakistan, Bangladesh, Bhutan, the Maldives Islands, Nepal or Sri Lanka;

(vi) Women;

(vii) Any additional groups whose members are designated as socially and economically disadvantaged by the SBA, at such time as the SBA designation becomes effective.

Tribally-owned concern means any concern at least 51 percent owned by an Indian tribe as defined in this section.

You refers to a recipient, unless a statement in the text of this part or the context requires otherwise (i.e., 'You must do XYZ' means that recipients must do XYZ).

[64 FR 5126, Feb. 2, 1999, as amended at 64 FR 34570, June 28, 1999; 68 FR 35553, June 16, 2003]

§26.7 What discriminatory actions are forbidden?

(a) You must never exclude any person from participation in, deny any person the benefits of, or otherwise discriminate against anyone in connection with the award and performance of any contract covered by this part on the basis of race, color, sex, or national origin.

(b) In administering your DBE program, you must not, directly or through contractual or other arrangements, use criteria or methods of administration that have the effect of defeating or substantially impairing accomplishment of the objectives of the program with respect to individuals of

a particular race, color, sex, or national origin.

§ 26.9 How does the Department issue guidance and interpretations under this part?

(a) Only guidance and interpretations (including interpretations set forth in certification appeal decisions) consistent with this part 26 and issued after March 4, 1999 express the official positions and views of the Department of Transportation or any of its operating administrations.

(b) The Secretary of Transportation, Office of the Secretary of Transportation, FHWA, FTA, and FAA may issue written interpretations of or written guidance concerning this part. Written interpretations and guidance are valid, and express the official positions and views of the Department of Transportation or any of its operating administrations, only if they are issued over the signature of the Secretary of Transportation or if they contain the following statement:

The General Counsel of the Department of Transportation has reviewed this document and approved it as consistent with the language and intent of 49 CFR part 26.

[72 FR 15617, Apr. 2, 2007]

§ 26.11 What records do recipients keep and report?

(a) [Reserved]

(b) You must continue to provide data about your DBE program to the Department as directed by DOT operating administrations.

(c) You must create and maintain a bidders list.

(1) The purpose of this list is to provide you as accurate data as possible about the universe of DBE and non-DBE contractors and subcontractors who seek to work on your Federally-assisted contracts for use in helping you set your overall goals.

(2) You must obtain the following information about DBE and non-DBE contractors and subcontractors who seek to work on your Federally-assisted contracts:

(i) Firm name;

(ii) Firm address;

(iii) Firm's status as a DBE or non-DBE;

(iv) Age of the firm; and

(v) The annual gross receipts of the firm. You may obtain this information by asking each firm to indicate into what gross receipts bracket they fit (*e.g.*, less than $500,000; $500,000–$1 million; $1–2 million; $2–5 million; etc.) rather than requesting an exact figure from the firm.

(3) You may acquire the information for your bidders list in a variety of ways. For example, you can collect the data from all bidders, before or after the bid due date. You can conduct a survey that will result in statistically sound estimate of the universe of DBE and non-DBE contractors and subcontractors who seek to work on your Federally-assisted contracts. You may combine different data collection approaches (*e.g.*, collect name and address information from all bidders, while conducting a survey with respect to age and gross receipts information).

[64 FR 5126, Feb. 2, 1999, as amended at 65 FR 68951, Nov. 15, 2000]

§ 26.13 What assurances must recipients and contractors make?

(a) Each financial assistance agreement you sign with a DOT operating administration (or a primary recipient) must include the following assurance:

The recipient shall not discriminate on the basis of race, color, national origin, or sex in the award and performance of any DOT-assisted contract or in the administration of its DBE program or the requirements of 49 CFR part 26. The recipient shall take all necessary and reasonable steps under 49 CFR part 26 to ensure nondiscrimination in the award and administration of DOT-assisted contracts. The recipient's DBE program, as required by 49 CFR part 26 and as approved by DOT, is incorporated by reference in this agreement. Implementation of this program is a legal obligation and failure to carry out its terms shall be treated as a violation of this agreement. Upon notification to the recipient of its failure to carry out its approved program, the Department may impose sanctions as provided for under part 26 and may, in appropriate cases, refer the matter for enforcement under 18 U.S.C. 1001 and/or the Program Fraud Civil Remedies Act of 1986 (31 U.S.C. 3801 *et seq.*).

(b) Each contract you sign with a contractor (and each subcontract the prime contractor signs with a subcontractor) must include the following assurance:

The contractor, sub recipient or subcontractor shall not discriminate on the basis of race, color, national origin, or sex in the performance of this contract. The contractor shall carry out applicable requirements of 49 CFR part 26 in the award and administration of DOT-assisted contracts. Failure by the contractor to carry out these requirements is a material breach of this contract, which may result in the termination of this contract or such other remedy as the recipient deems appropriate.

§ 26.15 How can recipients apply for exemptions or waivers?

(a) You can apply for an exemption from any provision of this part. To apply, you must request the exemption in writing from the Office of the Secretary of Transportation, FHWA, FTA, or FAA. The Secretary will grant the request only if it documents special or exceptional circumstances, not likely to be generally applicable, and not contemplated in connection with the rulemaking that established this part, that make your compliance with a specific provision of this part impractical. You must agree to take any steps that the Department specifies to comply with the intent of the provision from which an exemption is granted. The Secretary will issue a written response to all exemption requests.

(b) You can apply for a waiver of any provision of Subpart B or C of this part including, but not limited to, any provisions regarding administrative requirements, overall goals, contract goals or good faith efforts. Program waivers are for the purpose of authorizing you to operate a DBE program that achieves the objectives of this part by means that may differ from one or more of the requirements of Subpart B or C of this part. To receive a program waiver, you must follow these procedures:

(1) You must apply through the concerned operating administration. The application must include a specific program proposal and address how you will meet the criteria of paragraph (b)(2) of this section. Before submitting your application, you must have had public participation in developing your proposal, including consultation with the DBE community and at least one public hearing. Your application must include a summary of the public participation process and the information gathered through it.

(2) Your application must show that—

(i) There is a reasonable basis to conclude that you could achieve a level of DBE participation consistent with the objectives of this part using different or innovative means other than those that are provided in subpart B or C of this part;

(ii) Conditions in your jurisdiction are appropriate for implementing the proposal;

(iii) Your proposal would prevent discrimination against any individual or group in access to contracting opportunities or other benefits of the program; and

(iv) Your proposal is consistent with applicable law and program requirements of the concerned operating administration's financial assistance program.

(3) The Secretary has the authority to approve your application. If the Secretary grants your application, you may administer your DBE program as provided in your proposal, subject to the following conditions:

(i) DBE eligibility is determined as provided in subparts D and E of this part, and DBE participation is counted as provided in § 26.49;

(ii) Your level of DBE participation continues to be consistent with the objectives of this part;

(iii) There is a reasonable limitation on the duration of your modified program; and

(iv) Any other conditions the Secretary makes on the grant of the waiver.

(4) The Secretary may end a program waiver at any time and require you to comply with this part's provisions. The Secretary may also extend the waiver, if he or she determines that all requirements of paragraphs (b)(2) and (3) of this section continue to be met. Any such extension shall be for no longer than period originally set for the duration of the program.

Subpart B—Administrative Requirements for DBE Programs for Federally-Assisted Contracting

§ 26.21 Who must have a DBE program?

(a) If you are in one of these categories and let DOT-assisted contracts, you must have a DBE program meeting the requirements of this part:

(1) All FHWA recipients receiving funds authorized by a statute to which this part applies;

(2) FTA recipients receiving planning, capital and/or operating assistance who will award prime contracts (excluding transit vehicle purchases) exceeding $250,000 in FTA funds in a Federal fiscal year;

(3) FAA recipients receiving grants for airport planning or development who will award prime contracts exceeding $250,000 in FAA funds in a Federal fiscal year.

(b)(1) You must submit a DBE program conforming to this part by August 31, 1999 to the concerned operating administration (OA). Once the OA has approved your program, the approval counts for all of your DOT-assisted programs (except that goals are reviewed by the particular operating administration that provides funding for your DOT-assisted contracts).

(2) You do not have to submit regular updates of your DBE programs, as long as you remain in compliance. However, you must submit significant changes in the program for approval.

(c) You are not eligible to receive DOT financial assistance unless DOT has approved your DBE program and you are in compliance with it and this part. You must continue to carry out your program until all funds from DOT financial assistance have been expended.

[64 FR 5126, Feb. 2, 1999, as amended at 64 FR 34570, June 28, 1999; 65 FR 68951, Nov. 15, 2000]

§ 26.23 What is the requirement for a policy statement?

You must issue a signed and dated policy statement that expresses your commitment to your DBE program, states its objectives, and outlines responsibilities for its implementation. You must circulate the statement throughout your organization and to the DBE and non-DBE business communities that perform work on your DOT-assisted contracts.

§ 26.25 What is the requirement for a liaison officer?

You must have a DBE liaison officer, who shall have direct, independent access to your Chief Executive Officer concerning DBE program matters. The liaison officer shall be responsible for implementing all aspects of your DBE program. You must also have adequate staff to administer the program in compliance with this part.

§ 26.27 What efforts must recipients make concerning DBE financial institutions?

You must thoroughly investigate the full extent of services offered by financial institutions owned and controlled by socially and economically disadvantaged individuals in your community and make reasonable efforts to use these institutions. You must also encourage prime contractors to use such institutions.

§ 26.29 What prompt payment mechanisms must recipients have?

(a) You must establish, as part of your DBE program, a contract clause to require prime contractors to pay subcontractors for satisfactory performance of their contracts no later than 30 days from receipt of each payment you make to the prime contractor.

(b) You must ensure prompt and full payment of retainage from the prime contractor to the subcontractor within 30 days after the subcontractor's work is satisfactorily completed. You must use one of the following methods to comply with this requirement:

(1) You may decline to hold retainage from prime contractors and prohibit prime contractors from holding retainage from subcontractors.

(2) You may decline to hold retainage from prime contractors and require a contract clause obligating prime contractors to make prompt and full payment of any retainage kept by prime contractor to the subcontractor within

30 days after the subcontractor's work is satisfactorily completed.

(3) You may hold retainage from prime contractors and provide for prompt and regular incremental acceptances of portions of the prime contract, pay retainage to prime contractors based on these acceptances, and require a contract clause obligating the prime contractor to pay all retainage owed to the subcontractor for satisfactory completion of the accepted work within 30 days after your payment to the prime contractor.

(c) For purposes of this section, a subcontractor's work is satisfactorily completed when all the tasks called for in the subcontract have been accomplished and documented as required by the recipient. When a recipient has made an incremental acceptance of a portion of a prime contract, the work of a subcontractor covered by that acceptance is deemed to be satisfactorily completed.

(d) Your DBE program must provide appropriate means to enforce the requirements of this section. These means may include appropriate penalties for failure to comply, the terms and conditions of which you set. Your program may also provide that any delay or postponement of payment among the parties may take place only for good cause, with your prior written approval.

(e) You may also establish, as part of your DBE program, any of the following additional mechanisms to ensure prompt payment:

(1) A contract clause that requires prime contractors to include in their subcontracts language providing that prime contractors and subcontractors will use appropriate alternative dispute resolution mechanisms to resolve payment disputes. You may specify the nature of such mechanisms.

(2) A contract clause providing that the prime contractor will not be reimbursed for work performed by subcontractors unless and until the prime contractor ensures that the subcontractors are promptly paid for the work they have performed.

(3) Other mechanisms, consistent with this part and applicable state and local law, to ensure that DBEs and other contractors are fully and promptly paid.

[68 FR 35553, June 16, 2003]

§ 26.31 What requirements pertain to the DBE directory?

You must maintain and make available to interested persons a directory identifying all firms eligible to participate as DBEs in your program. In the listing for each firm, you must include its address, phone number, and the types of work the firm has been certified to perform as a DBE. You must revise your directory at least annually and make updated information available to contractors and the public on request.

§ 26.33 What steps must a recipient take to address overconcentration of DBEs in certain types of work?

(a) If you determine that DBE firms are so overconcentrated in a certain type of work as to unduly burden the opportunity of non-DBE firms to participate in this type of work, you must devise appropriate measures to address this overconcentration.

(b) These measures may include the use of incentives, technical assistance, business development programs, mentor-protégé programs, and other appropriate measures designed to assist DBEs in performing work outside of the specific field in which you have determined that non-DBEs are unduly burdened. You may also consider varying your use of contract goals, to the extent consistent with § 26.51, to unsure that non-DBEs are not unfairly prevented from competing for subcontracts.

(c) You must obtain the approval of the concerned DOT operating administration for your determination of overconcentration and the measures you devise to address it. Once approved, the measures become part of your DBE program.

§ 26.35 What role do business development and mentor-protégé programs have in the DBE program?

(a) You may or, if an operating administration directs you to, you must establish a DBE business development program (BDP) to assist firms in gaining the ability to compete successfully

in the marketplace outside the DBE program. You may require a DBE firm, as a condition of receiving assistance through the BDP, to agree to terminate its participation in the DBE program after a certain time has passed or certain objectives have been reached. See Appendix C of this part for guidance on administering BDP programs.

(b) As part of a BDP or separately, you may establish a ''mentor-protégé'' program, in which another DBE or non-DBE firm is the principal source of business development assistance to a DBE firm.

(1) Only firms you have certified as DBEs before they are proposed for participation in a mentor-protégé program are eligible to participate in the mentor-protégé program.

(2) During the course of the mentor-protégé relationship, you must:

(i) Not award DBE credit to a non-DBE mentor firm for using its own protégé firm for more than one half of its goal on any contract let by the recipient; and

(ii) Not award DBE credit to a non-DBE mentor firm for using its own protégé firm for more than every other contract performed by the protégé firm.

(3) For purposes of making determinations of business size under this part, you must not treat protégé firms as affiliates of mentor firms, when both firms are participating under an approved mentor-protégé program. See Appendix D of this part for guidance concerning the operation of mentor-protégé programs.

(c) Your BDPs and mentor-protégé programs must be approved by the concerned operating administration before you implement them. Once approved, they become part of your DBE program.

§ 26.37 What are a recipient's responsibilities for monitoring the performance of other program participants?

(a) You must implement appropriate mechanisms to ensure compliance with the part's requirements by all program participants (e.g., applying legal and contract remedies available under Federal, state and local law). You must set forth these mechanisms in your DBE program.

(b) Your DBE program must also include a monitoring and enforcement mechanism to ensure that work committed to DBEs at contract award is actually performed by DBEs.

(c) This mechanism must provide for a running tally of actual DBE attainments (*e.g.*, payments actually made to DBE firms), including a means of comparing these attainments to commitments. In your reports of DBE participation to the Department, you must display both commitments and attainments.

[64 FR 5126, Feb. 2, 1999, as amended at 65 FR 68951, Nov. 15, 2000; 68 FR 35554, June 16, 2003]

Subpart C—Goals, Good Faith Efforts, and Counting

§ 26.41 What is the role of the statutory 10 percent goal in this program?

(a) The statutes authorizing this program provide that, except to the extent the Secretary determines otherwise, not less than 10 percent of the authorized funds are to be expended with DBEs.

(b) This 10 percent goal is an aspirational goal at the national level, which the Department uses as a tool in evaluating and monitoring DBEs' opportunities to participate in DOT-assisted contracts.

(c) The national 10 percent goal does not authorize or require recipients to set overall or contract goals at the 10 percent level, or any other particular level, or to take any special administrative steps if their goals are above or below 10 percent.

§ 26.43 Can recipients use set-asides or quotas as part of this program?

(a) You are not permitted to use quotas for DBEs on DOT-assisted contracts subject to this part.

(b) You may not set-aside contracts for DBEs on DOT-assisted contracts subject to this part, except that, in limited and extreme circumstances, you may use set-asides when no other method could be reasonably expected to redress egregious instances of discrimination.

§ 26.45 How do recipients set overall goals?

(a)(1) Except as provided in paragraph (a)(2) of this section, you must set an overall goal for DBE participation in your DOT-assisted contracts.

(2) If you are a FTA or FAA recipient who reasonably anticipates awarding (excluding transit vehicle purchases) $250,000 or less in FTA or FAA funds in prime contracts in a Federal fiscal year, you are not required to develop overall goals for FTA or FAA respectively for that fiscal year. However, if you have an existing DBE program, it must remain in effect and you must seek to fulfill the objectives outlined in § 26.1.

(b) Your overall goal must be based on demonstrable evidence of the availability of ready, willing and able DBEs relative to all businesses ready, willing and able to participate on your DOT-assisted contracts (hereafter, the ''relative availability of DBEs''). The goal must reflect your determination of the level of DBE participation you would expect absent the effects of discrimination. You cannot simply rely on either the 10 percent national goal, your previous overall goal or past DBE participation rates in your program without reference to the relative availability of DBEs in your market.

(c) *Step 1.* You must begin your goal setting process by determining a base figure for the relative availability of DBEs. The following are examples of approaches that you may take toward determining a base figure. These examples are provided as a starting point for your goal setting process. Any percentage figure derived from one of these examples should be considered a basis from which you begin when examining all evidence available in your jurisdiction. These examples are not intended as an exhaustive list. Other methods or combinations of methods to determine a base figure may be used, subject to approval by the concerned operating administration.

(1) *Use DBE Directories and Census Bureau Data.* Determine the number of ready, willing and able DBEs in your market from your DBE directory. Using the Census Bureau's County Business Pattern (CBP) data base, determine the number of all ready, willing and able businesses available in your market that perform work in the same NAICS codes. (Information about the CBP data base may be obtained from the Census Bureau at their web site, *www.census.gov/epcd/cbp/view/cbpview.html.*) Divide the number of DBEs by the number of all businesses to derive a base figure for the relative availability of DBEs in your market.

(2) *Use a bidders list.* Determine the number of DBEs that have bid or quoted on your DOT-assisted prime contracts or subcontracts in the previous year. Determine the number of all businesses that have bid or quoted on prime or subcontracts in the same time period. Divide the number of DBE bidders and quoters by the number for all businesses to derive a base figure for the relative availability of DBEs in your market.

(3) *Use data from a disparity study.* Use a percentage figure derived from data in a valid, applicable disparity study.

(4) *Use the goal of another DOT recipient.* If another DOT recipient in the same, or substantially similar, market has set an overall goal in compliance with this rule, you may use that goal as a base figure for your goal.

(5) *Alternative methods.* You may use other methods to determine a base figure for your overall goal. Any methodology you choose must be based on demonstrable evidence of local market conditions and be designed to ultimately attain a goal that is rationally related to the relative availability of DBEs in your market.

(d) *Step 2.* Once you have calculated a base figure, you must examine all of the evidence available in your jurisdiction to determine what adjustment, if any, is needed to the base figure in order to arrive at your overall goal.

(1) There are many types of evidence that must be considered when adjusting the base figure. These include:

(i) The current capacity of DBEs to perform work in your DOT-assisted contracting program, as measured by the volume of work DBEs have performed in recent years;

(ii) Evidence from disparity studies conducted anywhere within your jurisdiction, to the extent it is not already accounted for in your base figure; and

(iii) If your base figure is the goal of another recipient, you must adjust it for differences in your local market and your contracting program.

(2) If available, you must consider evidence from related fields that affect the opportunities for DBEs to form, grow and compete. These include, but are not limited to:

(i) Statistical disparities in the ability of DBEs to get the financing, bonding and insurance required to participate in your program;

(ii) Data on employment, self-employment, education, training and union apprenticeship programs, to the extent you can relate it to the opportunities for DBEs to perform in your program.

(3) If you attempt to make an adjustment to your base figure to account for the continuing effects of past discrimination (often called the ''but for'' factor) or the effects of an ongoing DBE program, the adjustment must be based on demonstrable evidence that is logically and directly related to the effect for which the adjustment is sought.

(e) Once you have determined a percentage figure in accordance with paragraphs (c) and (d) of this section, you should express your overall goal as follows:

(1) If you are an FHWA recipient, as a percentage of all Federal-aid highway funds you will expend in FHWA-assisted contracts in the forthcoming fiscal year;

(2) If you are an FTA or FAA recipient, as a percentage of all FTA or FAA funds (exclusive of FTA funds to be used for the purchase of transit vehicles) that you will expend in FTA or FAA-assisted contracts in the forthcoming fiscal year. In appropriate cases, the FTA or FAA Administrator may permit you to express your overall goal as a percentage of funds for a particular grant or project or group of grants and/or projects.

(f)(1) If you set overall goals on a fiscal year basis, you must submit them to the applicable DOT operating administration for review on August 1 of each year, unless the Administrator of the concerned operating administration establishes a different submission date.

(2) If you are an FTA or FAA recipient and set your overall goal on a project or grant basis, you must submit the goal for review at a time determined by the FTA or FAA Administrator.

(3) You must include with your overall goal submission a description of the methodology you used to establish the goal, including your base figure and the evidence with which it was calculated, and the adjustments you made to the base figure and the evidence relied on for the adjustments. You should also include a summary listing of the relevant available evidence in your jurisdiction and, where applicable, an explanation of why you did not use that evidence to adjust your base figure. You must also include your projection of the portions of the overall goal you expect to meet through race-neutral and race-conscious measures, respectively (see § 26.51(c)).

(4) You are not required to obtain prior operating administration concurrence with the your overall goal. However, if the operating administration's review suggests that your overall goal has not been correctly calculated, or that your method for calculating goals is inadequate, the operating administration may, after consulting with you, adjust your overall goal or require that you do so. The adjusted overall goal is binding on you.

(5) If you need additional time to collect data or take other steps to develop an approach to setting overall goals, you may request the approval of the concerned operating administration for an interim goal and/or goal-setting mechanism. Such a mechanism must:

(i) Reflect the relative availability of DBEs in your local market to the maximum extent feasible given the data available to you; and

(ii) Avoid imposing undue burdens on non-DBEs.

(g) In establishing an overall goal, you must provide for public participation. This public participation must include:

(1) Consultation with minority, women's and general contractor groups, community organizations, and other officials or organizations which could

be expected to have information concerning the availability of disadvantaged and non-disadvantaged businesses, the effects of discrimination on opportunities for DBEs, and your efforts to establish a level playing field for the participation of DBEs.

(2) A published notice announcing your proposed overall goal, informing the public that the proposed goal and its rationale are available for inspection during normal business hours at your principal office for 30 days following the date of the notice, and informing the public that you and the Department will accept comments on the goals for 45 days from the date of the notice. The notice must include addresses to which comments may be sent, and you must publish it in general circulation media and available minority-focused media and trade association publications.

(h) Your overall goals must provide for participation by all certified DBEs and must not be subdivided into group-specific goals.

[64 FR 5126, Feb. 2, 1999, as amended at 64 FR 34570, June 28, 1999; 65 FR 68951, Nov. 15, 2000; 68 FR 35553, June 16, 2003]

§ 26.47 Can recipients be penalized for failing to meet overall goals?

(a) You cannot be penalized, or treated by the Department as being in noncompliance with this rule, because your DBE participation falls short of your overall goal, unless you have failed to administer your program in good faith.

(b) If you do not have an approved DBE program or overall goal, or if you fail to implement your program in good faith, you are in noncompliance with this part.

§ 26.49 How are overall goals established for transit vehicle manufacturers?

(a) If you are an FTA recipient, you must require in your DBE program that each transit vehicle manufacturer, as a condition of being authorized to bid or propose on FTA-assisted transit vehicle procurements, certify that it has complied with the requirements of this section. You do not include FTA assistance used in transit vehicle procurements in the base amount from which your overall goal is calculated.

(b) If you are a transit vehicle manufacturer, you must establish and submit for FTA's approval an annual overall percentage goal. In setting your overall goal, you should be guided, to the extent applicable, by the principles underlying § 26.45. The base from which you calculate this goal is the amount of FTA financial assistance included in transit vehicle contracts you will perform during the fiscal year in question. You must exclude from this base funds attributable to work performed outside the United States and its territories, possessions, and commonwealths. The requirements and procedures of this part with respect to submission and approval of overall goals apply to you as they do to recipients.

(c) As a transit vehicle manufacturer, you may make the certification required by this section if you have submitted the goal this section requires and FTA has approved it or not disapproved it.

(d) As a recipient, you may, with FTA approval, establish project-specific goals for DBE participation in the procurement of transit vehicles in lieu of complying through the procedures of this section.

(e) If you are an FHWA or FAA recipient, you may, with FHWA or FAA approval, use the procedures of this section with respect to procurements of vehicles or specialized equipment. If you choose to do so, then the manufacturers of this equipment must meet the same requirements (including goal approval by FHWA or FAA) as transit vehicle manufacturers must meet in FTA-assisted procurements.

§ 26.51 What means do recipients use to meet overall goals?

(a) You must meet the maximum feasible portion of your overall goal by using race-neutral means of facilitating DBE participation. Race-neutral DBE participation includes any time a DBE wins a prime contract through customary competitive procurement procedures, is awarded a subcontract on a prime contract that does not carry a DBE goal, or even if there is a DBE goal, wins a subcontract from a prime contractor that did not consider

its DBE status in making the award (e.g., a prime contractor that uses a strict low bid system to award subcontracts).

(b) Race-neutral means include, but are not limited to, the following:

(1) Arranging solicitations, times for the presentation of bids, quantities, specifications, and delivery schedules in ways that facilitate DBE, and other small businesses, participation (e.g., unbundling large contracts to make them more accessible to small businesses, requiring or encouraging prime contractors to subcontract portions of work that they might otherwise perform with their own forces);

(2) Providing assistance in overcoming limitations such as inability to obtain bonding or financing (e.g., by such means as simplifying the bonding process, reducing bonding requirements, eliminating the impact of surety costs from bids, and providing services to help DBEs, and other small businesses, obtain bonding and financing);

(3) Providing technical assistance and other services;

(4) Carrying out information and communications programs on contracting procedures and specific contract opportunities (e.g., ensuring the inclusion of DBEs, and other small businesses, on recipient mailing lists for bidders; ensuring the dissemination to bidders on prime contracts of lists of potential subcontractors; provision of information in languages other than English, where appropriate);

(5) Implementing a supportive services program to develop and improve immediate and long-term business management, record keeping, and financial and accounting capability for DBEs and other small businesses;

(6) Providing services to help DBEs, and other small businesses, improve long-term development, increase opportunities to participate in a variety of kinds of work, handle increasingly significant projects, and achieve eventual self-sufficiency;

(7) Establishing a program to assist new, start-up firms, particularly in fields in which DBE participation has historically been low;

(8) Ensuring distribution of your DBE directory, through print and electronic means, to the widest feasible universe of potential prime contractors; and

(9) Assisting DBEs, and other small businesses, to develop their capability to utilize emerging technology and conduct business through electronic media.

(c) Each time you submit your overall goal for review by the concerned operating administration, you must also submit your projection of the portion of the goal that you expect to meet through race-neutral means and your basis for that projection. This projection is subject to approval by the concerned operating administration, in conjunction with its review of your overall goal.

(d) You must establish contract goals to meet any portion of your overall goal you do not project being able to meet using race-neutral means.

(e) The following provisions apply to the use of contract goals:

(1) You may use contract goals only on those DOT-assisted contracts that have subcontracting possibilities.

(2) You are not required to set a contract goal on every DOT-assisted contract. You are not required to set each contract goal at the same percentage level as the overall goal. The goal for a specific contract may be higher or lower than that percentage level of the overall goal, depending on such factors as the type of work involved, the location of the work, and the availability of DBEs for the work of the particular contract. However, over the period covered by your overall goal, you must set contract goals so that they will cumulatively result in meeting any portion of your overall goal you do not project being able to meet through the use of race-neutral means.

(3) Operating administration approval of each contract goal is not necessarily required. However, operating administrations may review and approve or disapprove any contract goal you establish.

(4) Your contract goals must provide for participation by all certified DBEs and must not be subdivided into group-specific goals.

(f) To ensure that your DBE program continues to be narrowly tailored to overcome the effects of discrimination,

you must adjust your use of contract goals as follows:

(1) If your approved projection under paragraph (c) of this section estimates that you can meet your entire overall goal for a given year through race-neutral means, you must implement your program without setting contract goals during that year.

Example to Paragraph (f)(1)*:* Your overall goal for Year I is 12 percent. You estimate that you can obtain 12 percent or more DBE participation through the use of race-neutral measures, without any use of contract goals. In this case, you do not set any contract goals for the contracts that will be performed in Year I.

(2) If, during the course of any year in which you are using contract goals, you determine that you will exceed your overall goal, you must reduce or eliminate the use of contract goals to the extent necessary to ensure that the use of contract goals does not result in exceeding the overall goal. If you determine that you will fall short of your overall goal, then you must make appropriate modifications in your use of race-neutral and/or race-conscious measures to allow you to meet the overall goal.

Example to Paragraph (f)(2)*:* In Year II, your overall goal is 12 percent. You have estimated that you can obtain 5 percent DBE participation through use of race-neutral measures. You therefore plan to obtain the remaining 7 percent participation through use of DBE goals. By September, you have already obtained 11 percent DBE participation for the year. For contracts let during the remainder of the year, you use contract goals only to the extent necessary to obtain an additional one percent DBE participation. However, if you determine in September that your participation for the year is likely to be only 8 percent total, then you would increase your use of race-neutral and/or race-conscious means during the remainder of the year in order to achieve your overall goal.

(3) If the DBE participation you have obtained by race-neutral means alone meets or exceeds your overall goals for two consecutive years, you are not required to make a projection of the amount of your goal you can meet using such means in the next year. You do not set contract goals on any contracts in the next year. You continue using only race-neutral means to meet your overall goals unless and until you do not meet your overall goal for a year.

Example to Paragraph (f)(3)*:* Your overall goal for Years I and Year II is 10 percent. The DBE participation you obtain through race-neutral measures alone is 10 percent or more in each year. (For this purpose, it does not matter whether you obtained additional DBE participation through using contract goals in these years.) In Year III and following years, you do not need to make a projection under paragraph (c) of this section of the portion of your overall goal you expect to meet using race-neutral means. You simply use race-neutral means to achieve your overall goals. However, if in Year VI your DBE participation falls short of your overall goal, then you must make a paragraph (c) projection for Year VII and, if necessary, resume use of contract goals in that year.

(4) If you obtain DBE participation that exceeds your overall goal in two consecutive years through the use of contract goals (i.e., not through the use of race-neutral means alone), you must reduce your use of contract goals proportionately in the following year.

Example to Paragraph (f)(4)*:* In Years I and II, your overall goal is 12 percent, and you obtain 14 and 16 percent DBE participation, respectively. You have exceeded your goals over the two-year period by an average of 25 percent. In Year III, your overall goal is again 12 percent, and your paragraph (c) projection estimates that you will obtain 4 percent DBE participation through race-neutral means and 8 percent through contract goals. You then reduce the contract goal projection by 25 percent (i.e., from 8 to 6 percent) and set contract goals accordingly during the year. If in Year III you obtain 11 percent participation, you do not use this contract goal adjustment mechanism for Year IV, because there have not been two *consecutive* years of exceeding overall goals.

(g) In any year in which you project meeting part of your goal through race-neutral means and the remainder through contract goals, you must maintain data separately on DBE achievements in those contracts with and without contract goals, respectively. You must report this data to the concerned operating administration as provided in § 26.11.

§ 26.53 What are the good faith efforts procedures recipients follow in situations where there are contract goals?

(a) When you have established a DBE contract goal, you must award the contract only to a bidder/offeror who makes good faith efforts to meet it. You must determine that a bidder/offeror has made good faith efforts if the bidder/offeror does either of the following things:

(1) Documents that it has obtained enough DBE participation to meet the goal; or

(2) Documents that it made adequate good faith efforts to meet the goal, even though it did not succeed in obtaining enough DBE participation to do so. If the bidder/offeror does document adequate good faith efforts, you must not deny award of the contract on the basis that the bidder/offeror failed to meet the goal. See Appendix A of this part for guidance in determining the adequacy of a bidder/offeror's good faith efforts.

(b) In your solicitations for DOT-assisted contracts for which a contract goal has been established, you must require the following:

(1) Award of the contract will be conditioned on meeting the requirements of this section;

(2) All bidders/offerors will be required to submit the following information to the recipient, at the time provided in paragraph (b)(3) of this section:

(i) The names and addresses of DBE firms that will participate in the contract;

(ii) A description of the work that each DBE will perform;

(iii) The dollar amount of the participation of each DBE firm participating;

(iv) Written documentation of the bidder/offeror's commitment to use a DBE subcontractor whose participation it submits to meet a contract goal;

(v) Written confirmation from the DBE that it is participating in the contract as provided in the prime contractor's commitment; and

(vi) If the contract goal is not met, evidence of good faith efforts (see Appendix A of this part); and

(3) At your discretion, the bidder/offeror must present the information required by paragraph (b)(2) of this section—

(i) Under sealed bid procedures, as a matter of responsiveness, or with initial proposals, under contract negotiation procedures; or

(ii) At any time before you commit yourself to the performance of the contract by the bidder/offeror, as a matter of responsibility.

(c) You must make sure all information is complete and accurate and adequately documents the bidder/offeror's good faith efforts before committing yourself to the performance of the contract by the bidder/offeror.

(d) If you determine that the apparent successful bidder/offeror has failed to meet the requirements of paragraph (a) of this section, you must, before awarding the contract, provide the bidder/offeror an opportunity for administrative reconsideration.

(1) As part of this reconsideration, the bidder/offeror must have the opportunity to provide written documentation or argument concerning the issue of whether it met the goal or made adequate good faith efforts to do so.

(2) Your decision on reconsideration must be made by an official who did not take part in the original determination that the bidder/offeror failed to meet the goal or make adequate good faith efforts to do so.

(3) The bidder/offeror must have the opportunity to meet in person with your reconsideration official to discuss the issue of whether it met the goal or made adequate good faith efforts to do so.

(4) You must send the bidder/offeror a written decision on reconsideration, explaining the basis for finding that the bidder did or did not meet the goal or make adequate good faith efforts to do so.

(5) The result of the reconsideration process is not administratively appealable to the Department of Transportation.

(e) In a ''design-build'' or ''turnkey'' contracting situation, in which the recipient lets a master contract to a contractor, who in turn lets subsequent subcontracts for the work of the project, a recipient may establish a goal for the project. The master contractor then establishes contract goals,

as appropriate, for the subcontracts it lets. Recipients must maintain oversight of the master contractor's activities to ensure that they are conducted consistent with the requirements of this part.

(f)(1) You must require that a prime contractor not terminate for convenience a DBE subcontractor listed in response to paragraph (b)(2) of this section (or an approved substitute DBE firm) and then perform the work of the terminated subcontract with its own forces or those of an affiliate, without your prior written consent.

(2) When a DBE subcontractor is terminated, or fails to complete its work on the contract for any reason, you must require the prime contractor to make good faith efforts to find another DBE subcontractor to substitute for the original DBE. These good faith efforts shall be directed at finding another DBE to perform at least the same amount of work under the contract as the DBE that was terminated, to the extent needed to meet the contract goal you established for the procurement.

(3) You must include in each prime contract a provision for appropriate administrative remedies that you will invoke if the prime contractor fails to comply with the requirements of this section.

(g) You must apply the requirements of this section to DBE bidders/offerors for prime contracts. In determining whether a DBE bidder/offeror for a prime contract has met a contract goal, you count the work the DBE has committed to performing with its own forces as well as the work that it has committed to be performed by DBE subcontractors and DBE suppliers.

§ 26.55 How is DBE participation counted toward goals?

(a) When a DBE participates in a contract, you count only the value of the work actually performed by the DBE toward DBE goals.

(1) Count the entire amount of that portion of a construction contract (or other contract not covered by paragraph (a)(2) of this section) that is performed by the DBE's own forces. Include the cost of supplies and materials obtained by the DBE for the work of the contract, including supplies purchased or equipment leased by the DBE (except supplies and equipment the DBE subcontractor purchases or leases from the prime contractor or its affiliate).

(2) Count the entire amount of fees or commissions charged by a DBE firm for providing a bona fide service, such as professional, technical, consultant, or managerial services, or for providing bonds or insurance specifically required for the performance of a DOT-assisted contract, toward DBE goals, provided you determine the fee to be reasonable and not excessive as compared with fees customarily allowed for similar services.

(3) When a DBE subcontracts part of the work of its contract to another firm, the value of the subcontracted work may be counted toward DBE goals only if the DBE's subcontractor is itself a DBE. Work that a DBE subcontracts to a non-DBE firm does not count toward DBE goals.

(b) When a DBE performs as a participant in a joint venture, count a portion of the total dollar value of the contract equal to the distinct, clearly defined portion of the work of the contract that the DBE performs with its own forces toward DBE goals.

(c) Count expenditures to a DBE contractor toward DBE goals only if the DBE is performing a commercially useful function on that contract.

(1) A DBE performs a commercially useful function when it is responsible for execution of the work of the contract and is carrying out its responsibilities by actually performing, managing, and supervising the work involved. To perform a commercially useful function, the DBE must also be responsible, with respect to materials and supplies used on the contract, for negotiating price, determining quality and quantity, ordering the material, and installing (where applicable) and paying for the material itself. To determine whether a DBE is performing a commercially useful function, you must evaluate the amount of work subcontracted, industry practices, whether the amount the firm is to be paid under the contract is commensurate with the work it is actually performing and the

DBE credit claimed for its performance of the work, and other relevant factors.

(2) A DBE does not perform a commercially useful function if its role is limited to that of an extra participant in a transaction, contract, or project through which funds are passed in order to obtain the appearance of DBE participation. In determining whether a DBE is such an extra participant, you must examine similar transactions, particularly those in which DBEs do not participate.

(3) If a DBE does not perform or exercise responsibility for at least 30 percent of the total cost of its contract with its own work force, or the DBE subcontracts a greater portion of the work of a contract than would be expected on the basis of normal industry practice for the type of work involved, you must presume that it is not performing a commercially useful function.

(4) When a DBE is presumed not to be performing a commercially useful function as provided in paragraph (c)(3) of this section, the DBE may present evidence to rebut this presumption. You may determine that the firm is performing a commercially useful function given the type of work involved and normal industry practices.

(5) Your decisions on commercially useful function matters are subject to review by the concerned operating administration, but are not administratively appealable to DOT.

(d) Use the following factors in determining whether a DBE trucking company is performing a commercially useful function:

(1) The DBE must be responsible for the management and supervision of the entire trucking operation for which it is responsible on a particular contract, and there cannot be a contrived arrangement for the purpose of meeting DBE goals.

(2) The DBE must itself own and operate at least one fully licensed, insured, and operational truck used on the contract.

(3) The DBE receives credit for the total value of the transportation services it provides on the contract using trucks it owns, insures, and operates using drivers it employs.

(4) The DBE may lease trucks from another DBE firm, including an owner-operator who is certified as a DBE. The DBE who leases trucks from another DBE receives credit for the total value of the transportation services the lessee DBE provides on the contract.

(5) The DBE may also lease trucks from a non-DBE firm, including from an owner-operator. The DBE who leases trucks from a non-DBE is entitled to credit for the total value of transportation services provided by non-DBE lessees not to exceed the value of transportation services provided by DBE-owned trucks on the contract. Additional participation by non-DBE lessees receives credit only for the fee or commission it receives as a result of the lease arrangement. If a recipient chooses this approach, it must obtain written consent from the appropriate Department Operating Administration.

Example to this paragraph (d)(5)*:* DBE Firm X uses two of its own trucks on a contract. It leases two trucks from DBE Firm Y and six trucks from non-DBE Firm Z. DBE credit would be awarded for the total value of transportation services provided by Firm X and Firm Y, and may also be awarded for the total value of transportation services provided by four of the six trucks provided by Firm Z. In all, full credit would be allowed for the participation of eight trucks. With respect to the other two trucks provided by Firm Z, DBE credit could be awarded only for the fees or commissions pertaining to those trucks Firm X receives as a result of the lease with Firm Z.

(6) For purposes of this paragraph (d), a lease must indicate that the DBE has exclusive use of and control over the truck. This does not preclude the leased truck from working for others during the term of the lease with the consent of the DBE, so long as the lease gives the DBE absolute priority for use of the leased truck. Leased trucks must display the name and identification number of the DBE.

(e) Count expenditures with DBEs for materials or supplies toward DBE goals as provided in the following:

(1)(i) If the materials or supplies are obtained from a DBE manufacturer, count 100 percent of the cost of the materials or supplies toward DBE goals.

(ii) For purposes of this paragraph (e)(1), a manufacturer is a firm that operates or maintains a factory or establishment that produces, on the premises, the materials, supplies, articles, or equipment required under the contract and of the general character described by the specifications.

(2)(i) If the materials or supplies are purchased from a DBE regular dealer, count 60 percent of the cost of the materials or supplies toward DBE goals.

(ii) For purposes of this section, a regular dealer is a firm that owns, operates, or maintains a store, warehouse, or other establishment in which the materials, supplies, articles or equipment of the general character described by the specifications and required under the contract are bought, kept in stock, and regularly sold or leased to the public in the usual course of business.

(A) To be a regular dealer, the firm must be an established, regular business that engages, as its principal business and under its own name, in the purchase and sale or lease of the products in question.

(B) A person may be a regular dealer in such bulk items as petroleum products, steel, cement, gravel, stone, or asphalt without owning, operating, or maintaining a place of business as provided in this paragraph (e)(2)(ii) if the person both owns and operates distribution equipment for the products. Any supplementing of regular dealers' own distribution equipment shall be by a long-term lease agreement and not on an ad hoc or contract-by-contract basis.

(C) Packagers, brokers, manufacturers' representatives, or other persons who arrange or expedite transactions are not regular dealers within the meaning of this paragraph (e)(2).

(3) With respect to materials or supplies purchased from a DBE which is neither a manufacturer nor a regular dealer, count the entire amount of fees or commissions charged for assistance in the procurement of the materials and supplies, or fees or transportation charges for the delivery of materials or supplies required on a job site, toward DBE goals, provided you determine the fees to be reasonable and not excessive as compared with fees customarily allowed for similar services. Do not count any portion of the cost of the materials and supplies themselves toward DBE goals, however.

(f) If a firm is not currently certified as a DBE in accordance with the standards of subpart D of this part at the time of the execution of the contract, do not count the firm's participation toward any DBE goals, except as provided for in § 26.87(i)).

(g) Do not count the dollar value of work performed under a contract with a firm after it has ceased to be certified toward your overall goal.

(h) Do not count the participation of a DBE subcontractor toward a contractor's final compliance with its DBE obligations on a contract until the amount being counted has actually been paid to the DBE.

[64 FR 5126, Feb. 2, 1999, as amended at 65 FR 68951, Nov. 15, 2000; 68 FR 35554, June 16, 2003]

Subpart D—Certification Standards

§ 26.61 How are burdens of proof allocated in the certification process?

(a) In determining whether to certify a firm as eligible to participate as a DBE, you must apply the standards of this subpart.

(b) The firm seeking certification has the burden of demonstrating to you, by a preponderance of the evidence, that it meets the requirements of this subpart concerning group membership or individual disadvantage, business size, ownership, and control.

(c) You must rebuttably presume that members of the designated groups identified in § 26.67(a) are socially and economically disadvantaged. This means they do not have the burden of proving to you that they are socially and economically disadvantaged. In order to obtain the benefit of the rebuttable presumption, individuals must submit a signed, notarized statement that they are a member of one of the groups in § 26.67(a). Applicants do have the obligation to provide you information concerning their economic disadvantage (*see* § 26.67).

(d) Individuals who are not presumed to be socially and economically disadvantaged, and individuals concerning whom the presumption of disadvantage has been rebutted, have the burden of

proving to you, by a preponderance of the evidence, that they are socially and economically disadvantaged. (See Appendix E of this part.)

(e) You must make determinations concerning whether individuals and firms have met their burden of demonstrating group membership, ownership, control, and social and economic disadvantage (where disadvantage must be demonstrated on an individual basis) by considering all the facts in the record, viewed as a whole.

[64 FR 5126, Feb. 2, 1999, as amended at 68 FR 35554, June 16, 2003]

§ 26.63 What rules govern group membership determinations?

(a)(1) If, after reviewing the signed notarized statement of membership in a presumptively disadvantaged group (see § 26.61(c)), you have a well founded reason to question the individual's claim of membership in that group, you must require the individual to present additional evidence that he or she is a member of the group.

(2) You must provide the individual a written explanation of your reasons for questioning his or her group membership and a written request for additional evidence as outlined in paragraph (b) of this section.

(3) In implementing this section, you must take special care to ensure that you do not impose a disproportionate burden on members of any particular designated group. Imposing a disproportionate burden on members of a particular group could violate § 26.7(b) and/or Title VI of the Civil Rights Act of 1964 and 49 CFR part 21.

(b) In making such a determination, you must consider whether the person has held himself out to be a member of the group over a long period of time prior to application for certification and whether the person is regarded as a member of the group by the relevant community. You may require the applicant to produce appropriate documentation of group membership.

(1) If you determine that an individual claiming to be a member of a group presumed to be disadvantaged is not a member of a designated disadvantaged group, the individual must demonstrate social and economic disadvantage on an individual basis.

(2) Your decisions concerning membership in a designated group are subject to the certification appeals procedure of § 26.89.

[64 FR 5126, Feb. 2, 1999, as amended at 68 FR 35554, June 16, 2003]

§ 26.65 What rules govern business size determinations?

(a) To be an eligible DBE, a firm (including its affiliates) must be an existing small business, as defined by Small Business Administration (SBA) standards. As a recipient, you must apply current SBA business size standard(s) found in 13 CFR part 121 appropriate to the type(s) of work the firm seeks to perform in DOT-assisted contracts.

(b) Even if it meets the requirements of paragraph (a) of this section, a firm is not an eligible DBE in any Federal fiscal year if the firm (including its affiliates) has had average annual gross receipts, as defined by SBA regulations (see 13 CFR 121.402), over the firm's previous three fiscal years, in excess of $20.41 million.

(c) The Department adjusts the number in paragraph (b) of this section using the Department of Commerce price deflators for purchases by State and local governments as the basis for this adjustment. The Department issues a final rule by August 10 of each year making this adjustment.

[72 FR 15617, Apr. 2, 2007]

§ 26.67 What rules determine social and economic disadvantage?

(a) *Presumption of disadvantage.* (1) You must rebuttably presume that citizens of the United States (or lawfully admitted permanent residents) who are women, Black Americans, Hispanic Americans, Native Americans, Asian-Pacific Americans, Subcontinent Asian Americans, or other minorities found to be disadvantaged by the SBA, are socially and economically disadvantaged individuals. You must require applicants to submit a signed, notarized certification that each presumptively disadvantaged owner is, in fact, socially and economically disadvantaged.

(2) (i) You must require each individual owner of a firm applying to participate as a DBE (except a firm applying to participate as a DBE airport concessionaire) whose ownership and control are relied upon for DBE certification to certify that he or she has a personal net worth that does not exceed $750,000.

(ii) You must require each individual who makes this certification to support it with a signed, notarized statement of personal net worth, with appropriate supporting documentation. This statement and documentation must not be unduly lengthy, burdensome, or intrusive.

(iii) In determining an individual's net worth, you must observe the following requirements:

(A) Exclude an individual's ownership interest in the applicant firm;

(B) Exclude the individual's equity in his or her primary residence (except any portion of such equity that is attributable to excessive withdrawals from the applicant firm).

(C) Do not use a contingent liability to reduce an individual's net worth.

(D) With respect to assets held in vested pension plans, Individual Retirement Accounts, 401(k) accounts, or other retirement savings or investment programs in which the assets cannot be distributed to the individual at the present time without significant adverse tax or interest consequences, include only the present value of such assets, less the tax and interest penalties that would accrue if the asset were distributed at the present time.

(iv) Notwithstanding any provision of Federal or state law, you must not release an individual's personal net worth statement nor any documentation supporting it to any third party without the written consent of the submitter. *Provided,* that you must transmit this information to DOT in any certification appeal proceeding under § 26.89 in which the disadvantaged status of the individual is in question.

(b) *Rebuttal of presumption of disadvantage.* (1) If the statement of personal net worth that an individual submits under paragraph (a)(2) of this section shows that the individual's personal net worth exceeds $750,000, the individual's presumption of economic disadvantage is rebutted. You are not required to have a proceeding under paragraph (b)(2) of this section in order to rebut the presumption of economic disadvantage in this case.

(2) If you have a reasonable basis to believe that an individual who is a member of one of the designated groups is not, in fact, socially and/or economically disadvantaged you may, at any time, start a proceeding to determine whether the presumption should be regarded as rebutted with respect to that individual. Your proceeding must follow the procedures of § 26.87.

(3) In such a proceeding, you have the burden of demonstrating, by a preponderance of the evidence, that the individual is not socially and economically disadvantaged. You may require the individual to produce information relevant to the determination of his or her disadvantage.

(4) When an individual's presumption of social and/or economic disadvantage has been rebutted, his or her ownership and control of the firm in question cannot be used for purposes of DBE eligibility under this subpart unless and until he or she makes an individual showing of social and/or economic disadvantage. If the basis for rebutting the presumption is a determination that the individual's personal net worth exceeds $750,000, the individual is no longer eligible for participation in the program and cannot regain eligibility by making an individual showing of disadvantage.

(c) [Reserved]

(d) *Individual determinations of social and economic disadvantage.* Firms owned and controlled by individuals who are not presumed to be socially and economically disadvantaged (including individuals whose presumed disadvantage has been rebutted) may apply for DBE certification. You must make a case-by-case determination of whether each individual whose ownership and control are relied upon for DBE certification is socially and economically disadvantaged. In such a proceeding, the applicant firm has the burden of demonstrating to you, by a preponderance of the evidence, that the individuals who own and control it are socially and economically disadvantaged. An individual whose personal

net worth exceeds $750,000 shall not be deemed to be economically disadvantaged. In making these determinations, use the guidance found in Appendix E of this part. You must require that applicants provide sufficient information to permit determinations under the guidance of Appendix E of this part.

[64 FR 5126, Feb. 2, 1999, as amended at 64 FR 34570, June 28, 1999; 68 FR 35554, June 16, 2003]

§ 26.69 What rules govern determinations of ownership?

(a) In determining whether the socially and economically disadvantaged participants in a firm own the firm, you must consider all the facts in the record, viewed as a whole.

(b) To be an eligible DBE, a firm must be at least 51 percent owned by socially and economically disadvantaged individuals.

(1) In the case of a corporation, such individuals must own at least 51 percent of the each class of voting stock outstanding and 51 percent of the aggregate of all stock outstanding.

(2) In the case of a partnership, 51 percent of each class of partnership interest must be owned by socially and economically disadvantaged individuals. Such ownership must be reflected in the firm's partnership agreement.

(3) In the case of a limited liability company, at least 51 percent of each class of member interest must be owned by socially and economically disadvantaged individuals.

(c) The firm's ownership by socially and economically disadvantaged individuals must be real, substantial, and continuing, going beyond pro forma ownership of the firm as reflected in ownership documents. The disadvantaged owners must enjoy the customary incidents of ownership, and share in the risks and profits commensurate with their ownership interests, as demonstrated by the substance, not merely the form, of arrangements.

(d) All securities that constitute ownership of a firm shall be held directly by disadvantaged persons. Except as provided in this paragraph (d), no securities or assets held in trust, or by any guardian for a minor, are considered as held by disadvantaged persons in determining the ownership of a firm. However, securities or assets held in trust are regarded as held by a disadvantaged individual for purposes of determining ownership of the firm, if—

(1) The beneficial owner of securities or assets held in trust is a disadvantaged individual, and the trustee is the same or another such individual; or

(2) The beneficial owner of a trust is a disadvantaged individual who, rather than the trustee, exercises effective control over the management, policymaking, and daily operational activities of the firm. Assets held in a revocable living trust may be counted only in the situation where the same disadvantaged individual is the sole grantor, beneficiary, and trustee.

(e) The contributions of capital or expertise by the socially and economically disadvantaged owners to acquire their ownership interests must be real and substantial. Examples of insufficient contributions include a promise to contribute capital, an unsecured note payable to the firm or an owner who is not a disadvantaged individual, or mere participation in a firm's activities as an employee. Debt instruments from financial institutions or other organizations that lend funds in the normal course of their business do not render a firm ineligible, even if the debtor's ownership interest is security for the loan.

(f) The following requirements apply to situations in which expertise is relied upon as part of a disadvantaged owner's contribution to acquire ownership:

(1) The owner's expertise must be—

(i) In a specialized field;

(ii) Of outstanding quality;

(iii) In areas critical to the firm's operations;

(iv) Indispensable to the firm's potential success;

(v) Specific to the type of work the firm performs; and

(vi) Documented in the records of the firm. These records must clearly show the contribution of expertise and its value to the firm.

(2) The individual whose expertise is relied upon must have a significant financial investment in the firm.

(g) You must always deem as held by a socially and economically disadvantaged individual, for purposes of determining ownership, all interests in a

business or other assets obtained by the individual—

(1) As the result of a final property settlement or court order in a divorce or legal separation, provided that no term or condition of the agreement or divorce decree is inconsistent with this section; or

(2) Through inheritance, or otherwise because of the death of the former owner.

(h)(1) You must presume as not being held by a socially and economically disadvantaged individual, for purposes of determining ownership, all interests in a business or other assets obtained by the individual as the result of a gift, or transfer without adequate consideration, from any non-disadvantaged individual or non-DBE firm who is—

(i) Involved in the same firm for which the individual is seeking certification, or an affiliate of that firm;

(ii) Involved in the same or a similar line of business; or

(iii) Engaged in an ongoing business relationship with the firm, or an affiliate of the firm, for which the individual is seeking certification.

(2) To overcome this presumption and permit the interests or assets to be counted, the disadvantaged individual must demonstrate to you, by clear and convincing evidence, that—

(i) The gift or transfer to the disadvantaged individual was made for reasons other than obtaining certification as a DBE; and

(ii) The disadvantaged individual actually controls the management, policy, and operations of the firm, notwithstanding the continuing participation of a non-disadvantaged individual who provided the gift or transfer.

(i) You must apply the following rules in situations in which marital assets form a basis for ownership of a firm:

(1) When marital assets (other than the assets of the business in question), held jointly or as community property by both spouses, are used to acquire the ownership interest asserted by one spouse, you must deem the ownership interest in the firm to have been acquired by that spouse with his or her own individual resources, provided that the other spouse irrevocably renounces and transfers all rights in the ownership interest in the manner sanctioned by the laws of the state in which either spouse or the firm is domiciled. You do not count a greater portion of joint or community property assets toward ownership than state law would recognize as belonging to the socially and economically disadvantaged owner of the applicant firm.

(2) A copy of the document legally transferring and renouncing the other spouse's rights in the jointly owned or community assets used to acquire an ownership interest in the firm must be included as part of the firm's application for DBE certification.

(j) You may consider the following factors in determining the ownership of a firm. However, you must not regard a contribution of capital as failing to be real and substantial, or find a firm ineligible, solely because—

(1) A socially and economically disadvantaged individual acquired his or her ownership interest as the result of a gift, or transfer without adequate consideration, other than the types set forth in paragraph (h) of this section;

(2) There is a provision for the co-signature of a spouse who is not a socially and economically disadvantaged individual on financing agreements, contracts for the purchase or sale of real or personal property, bank signature cards, or other documents; or

(3) Ownership of the firm in question or its assets is transferred for adequate consideration from a spouse who is not a socially and economically disadvantaged individual to a spouse who is such an individual. In this case, you must give particularly close and careful scrutiny to the ownership and control of a firm to ensure that it is owned and controlled, in substance as well as in form, by a socially and economically disadvantaged individual.

§ 26.71 What rules govern determinations concerning control?

(a) In determining whether socially and economically disadvantaged owners control a firm, you must consider all the facts in the record, viewed as a whole.

(b) Only an independent business may be certified as a DBE. An independent business is one the viability of which

does not depend on its relationship with another firm or firms.

(1) In determining whether a potential DBE is an independent business, you must scrutinize relationships with non-DBE firms, in such areas as personnel, facilities, equipment, financial and/or bonding support, and other resources.

(2) You must consider whether present or recent employer/employee relationships between the disadvantaged owner(s) of the potential DBE and non-DBE firms or persons associated with non-DBE firms compromise the independence of the potential DBE firm.

(3) You must examine the firm's relationships with prime contractors to determine whether a pattern of exclusive or primary dealings with a prime contractor compromises the independence of the potential DBE firm.

(4) In considering factors related to the independence of a potential DBE firm, you must consider the consistency of relationships between the potential DBE and non-DBE firms with normal industry practice.

(c) A DBE firm must not be subject to any formal or informal restrictions which limit the customary discretion of the socially and economically disadvantaged owners. There can be no restrictions through corporate charter provisions, by-law provisions, contracts or any other formal or informal devices (e.g., cumulative voting rights, voting powers attached to different classes of stock, employment contracts, requirements for concurrence by non-disadvantaged partners, conditions precedent or subsequent, executory agreements, voting trusts, restrictions on or assignments of voting rights) that prevent the socially and economically disadvantaged owners, without the cooperation or vote of any non-disadvantaged individual, from making any business decision of the firm. This paragraph does not preclude a spousal co-signature on documents as provided for in § 26.69(j)(2).

(d) The socially and economically disadvantaged owners must possess the power to direct or cause the direction of the management and policies of the firm and to make day-to-day as well as long-term decisions on matters of management, policy and operations.

(1) A disadvantaged owner must hold the highest officer position in the company (e.g., chief executive officer or president).

(2) In a corporation, disadvantaged owners must control the board of directors.

(3) In a partnership, one or more disadvantaged owners must serve as general partners, with control over all partnership decisions.

(e) Individuals who are not socially and economically disadvantaged may be involved in a DBE firm as owners, managers, employees, stockholders, officers, and/or directors. Such individuals must not, however, possess or exercise the power to control the firm, or be disproportionately responsible for the operation of the firm.

(f) The socially and economically disadvantaged owners of the firm may delegate various areas of the management, policymaking, or daily operations of the firm to other participants in the firm, regardless of whether these participants are socially and economically disadvantaged individuals. Such delegations of authority must be revocable, and the socially and economically disadvantaged owners must retain the power to hire and fire any person to whom such authority is delegated. The managerial role of the socially and economically disadvantaged owners in the firm's overall affairs must be such that the recipient can reasonably conclude that the socially and economically disadvantaged owners actually exercise control over the firm's operations, management, and policy.

(g) The socially and economically disadvantaged owners must have an overall understanding of, and managerial and technical competence and experience directly related to, the type of business in which the firm is engaged and the firm's operations. The socially and economically disadvantaged owners are not required to have experience or expertise in every critical area of the firm's operations, or to have greater experience or expertise in a given field than managers or key employees.

The socially and economically disadvantaged owners must have the ability to intelligently and critically evaluate information presented by other participants in the firm's activities and to use this information to make independent decisions concerning the firm's daily operations, management, and policymaking. Generally, expertise limited to office management, administration, or bookkeeping functions unrelated to the principal business activities of the firm is insufficient to demonstrate control.

(h) If state or local law requires the persons to have a particular license or other credential in order to own and/or control a certain type of firm, then the socially and economically disadvantaged persons who own and control a potential DBE firm of that type must possess the required license or credential. If state or local law does not require such a person to have such a license or credential to own and/or control a firm, you must not deny certification solely on the ground that the person lacks the license or credential. However, you may take into account the absence of the license or credential as one factor in determining whether the socially and economically disadvantaged owners actually control the firm.

(i)(1) You may consider differences in remuneration between the socially and economically disadvantaged owners and other participants in the firm in determining whether to certify a firm as a DBE. Such consideration shall be in the context of the duties of the persons involved, normal industry practices, the firm's policy and practice concerning reinvestment of income, and any other explanations for the differences proffered by the firm. You may determine that a firm is controlled by its socially and economically disadvantaged owner although that owner's remuneration is lower than that of some other participants in the firm.

(2) In a case where a non-disadvantaged individual formerly controlled the firm, and a socially and economically disadvantaged individual now controls it, you may consider a difference between the remuneration of the former and current controller of the firm as a factor in determining who controls the firm, particularly when the non-disadvantaged individual remains involved with the firm and continues to receive greater compensation than the disadvantaged individual.

(j) In order to be viewed as controlling a firm, a socially and economically disadvantaged owner cannot engage in outside employment or other business interests that conflict with the management of the firm or prevent the individual from devoting sufficient time and attention to the affairs of the firm to control its activities. For example, absentee ownership of a business and part-time work in a full-time firm are not viewed as constituting control. However, an individual could be viewed as controlling a part-time business that operates only on evenings and/or weekends, if the individual controls it all the time it is operating.

(k)(1) A socially and economically disadvantaged individual may control a firm even though one or more of the individual's immediate family members (who themselves are not socially and economically disadvantaged individuals) participate in the firm as a manager, employee, owner, or in another capacity. Except as otherwise provided in this paragraph, you must make a judgment about the control the socially and economically disadvantaged owner exercises vis-a-vis other persons involved in the business as you do in other situations, without regard to whether or not the other persons are immediate family members.

(2) If you cannot determine that the socially and economically disadvantaged owners—as distinct from the family as a whole—control the firm, then the socially and economically disadvantaged owners have failed to carry their burden of proof concerning control, even though they may participate significantly in the firm's activities.

(l) Where a firm was formerly owned and/or controlled by a non-disadvantaged individual (whether or not an immediate family member), ownership and/or control were transferred to a socially and economically disadvantaged individual, and the non-disadvantaged individual remains involved with the

firm in any capacity, the disadvantaged individual now owning the firm must demonstrate to you, by clear and convincing evidence, that:

(1) The transfer of ownership and/or control to the disadvantaged individual was made for reasons other than obtaining certification as a DBE; and

(2) The disadvantaged individual actually controls the management, policy, and operations of the firm, notwithstanding the continuing participation of a non-disadvantaged individual who formerly owned and/or controlled the firm.

(m) In determining whether a firm is controlled by its socially and economically disadvantaged owners, you may consider whether the firm owns equipment necessary to perform its work. However, you must not determine that a firm is not controlled by socially and economically disadvantaged individuals solely because the firm leases, rather than owns, such equipment, where leasing equipment is a normal industry practice and the lease does not involve a relationship with a prime contractor or other party that compromises the independence of the firm.

(n) You must grant certification to a firm only for specific types of work in which the socially and economically disadvantaged owners have the ability to control the firm. To become certified in an additional type of work, the firm need demonstrate to you only that its socially and economically disadvantaged owners are able to control the firm with respect to that type of work. You may not, in this situation, require that the firm be recertified or submit a new application for certification, but you must verify the disadvantaged owner's control of the firm in the additional type of work.

(o) A business operating under a franchise or license agreement may be certified if it meets the standards in this subpart and the franchiser or licenser is not affiliated with the franchisee or licensee. In determining whether affiliation exists, you should generally not consider the restraints relating to standardized quality, advertising, accounting format, and other provisions imposed on the franchisee or licensee by the franchise agreement or license, provided that the franchisee or licensee has the right to profit from its efforts and bears the risk of loss commensurate with ownership. Alternatively, even though a franchisee or licensee may not be controlled by virtue of such provisions in the franchise agreement or license, affiliation could arise through other means, such as common management or excessive restrictions on the sale or transfer of the franchise interest or license.

(p) In order for a partnership to be controlled by socially and economically disadvantaged individuals, any non-disadvantaged partners must not have the power, without the specific written concurrence of the socially and economically disadvantaged partner(s), to contractually bind the partnership or subject the partnership to contract or tort liability.

(q) The socially and economically disadvantaged individuals controlling a firm may use an employee leasing company. The use of such a company does not preclude the socially and economically disadvantaged individuals from controlling their firm if they continue to maintain an employer-employee relationship with the leased employees. This includes being responsible for hiring, firing, training, assigning, and otherwise controlling the on-the-job activities of the employees, as well as ultimate responsibility for wage and tax obligations related to the employees.

§ 26.73 What are other rules affecting certification?

(a)(1) Consideration of whether a firm performs a commercially useful function or is a regular dealer pertains solely to counting toward DBE goals the participation of firms that have already been certified as DBEs. Except as provided in paragraph (a)(2) of this section, you must not consider commercially useful function issues in any way in making decisions about whether to certify a firm as a DBE.

(2) You may consider, in making certification decisions, whether a firm has exhibited a pattern of conduct indicating its involvement in attempts to evade or subvert the intent or requirements of the DBE program.

(b) You must evaluate the eligibility of a firm on the basis of present circumstances. You must not refuse to certify a firm based solely on historical information indicating a lack of ownership or control of the firm by socially and economically disadvantaged individuals at some time in the past, if the firm currently meets the ownership and control standards of this part. Nor must you refuse to certify a firm solely on the basis that it is a newly formed firm.

(c) DBE firms and firms seeking DBE certification shall cooperate fully with your requests (and DOT requests) for information relevant to the certification process. Failure or refusal to provide such information is a ground for a denial or removal of certification.

(d) Only firms organized for profit may be eligible DBEs. Not-for-profit organizations, even though controlled by socially and economically disadvantaged individuals, are not eligible to be certified as DBEs.

(e) An eligible DBE firm must be owned by individuals who are socially and economically disadvantaged. Except as provided in this paragraph, a firm that is not owned by such individuals, but instead is owned by another firm—even a DBE firm—cannot be an eligible DBE.

(1) If socially and economically disadvantaged individuals own and control a firm through a parent or holding company, established for tax, capitalization or other purposes consistent with industry practice, and the parent or holding company in turn owns and controls an operating subsidiary, you may certify the subsidiary if it otherwise meets all requirements of this subpart. In this situation, the individual owners and controllers of the parent or holding company are deemed to control the subsidiary through the parent or holding company.

(2) You may certify such a subsidiary only if there is cumulatively 51 percent ownership of the subsidiary by socially and economically disadvantaged individuals. The following examples illustrate how this cumulative ownership provision works:

Example 1: Socially and economically disadvantaged individuals own 100 percent of a holding company, which has a wholly-owned subsidiary. The subsidiary may be certified, if it meets all other requirements.

Example 2: Disadvantaged individuals own 100 percent of the holding company, which owns 51 percent of a subsidiary. The subsidiary may be certified, if all other requirements are met.

Example 3: Disadvantaged individuals own 80 percent of the holding company, which in turn owns 70 percent of a subsidiary. In this case, the cumulative ownership of the subsidiary by disadvantaged individuals is 56 percent (80 percent of the 70 percent). This is more than 51 percent, so you may certify the subsidiary, if all other requirements are met.

Example 4: Same as Example 2 or 3, but someone other than the socially and economically disadvantaged owners of the parent or holding company controls the subsidiary. Even though the subsidiary is owned by disadvantaged individuals, through the holding or parent company, you cannot certify it because it fails to meet control requirements.

Example 5: Disadvantaged individuals own 60 percent of the holding company, which in turn owns 51 percent of a subsidiary. In this case, the cumulative ownership of the subsidiary by disadvantaged individuals is about 31 percent. This is less than 51 percent, so you cannot certify the subsidiary.

Example 6: The holding company, in addition to the subsidiary seeking certification, owns several other companies. The combined gross receipts of the holding companies and its subsidiaries are greater than the size standard for the subsidiary seeking certification and/or the gross receipts cap of § 26.65(b). Under the rules concerning affiliation, the subsidiary fails to meet the size standard and cannot be certified.

(f) Recognition of a business as a separate entity for tax or corporate purposes is not necessarily sufficient to demonstrate that a firm is an independent business, owned and controlled by socially and economically disadvantaged individuals.

(g) You must not require a DBE firm to be prequalified as a condition for certification unless the recipient requires all firms that participate in its contracts and subcontracts to be prequalified.

(h) A firm that is owned by an Indian tribe or Native Hawaiian organization, rather than by Indians or Native Hawaiians as individuals, may be eligible for certification. Such a firm must meet the size standards of § 26.35. Such a firm must be controlled by socially and economically disadvantaged individuals, as provided in § 26.71.

(i) The following special rules apply to the certification of firms related to Alaska Native Corporations (ANCs).

(1) Notwithstanding any other provisions of this subpart, a direct or indirect subsidiary corporation, joint venture, or partnership entity of an ANC is eligible for certification as a DBE if it meets all of the following requirements:

(i) The Settlement Common Stock of the underlying ANC and other stock of the ANC held by holders of the Settlement Common Stock and by Natives and descendents of Natives represents a majority of both the total equity of the ANC and the total voting power of the corporation for purposes of electing directors;

(ii) The shares of stock or other units of common ownership interest in the subsidiary, joint venture, or partnership entity held by the ANC and by holders of its Settlement Common Stock represent a majority of both the total equity of the entity and the total voting power of the entity for the purpose of electing directors, the general partner, or principal officers; and

(iii) The subsidiary, joint venture, or partnership entity has been certified by the Small Business Administration under the 8(a) or small disadvantaged business program.

(2) As a recipient to whom an ANC-related entity applies for certification, you do not use the DOT uniform application form (*see* Appendix F of this part). You must obtain from the firm documentation sufficient to demonstrate that entity meets the requirements of paragraph (i)(1) of this section. You must also obtain sufficient information about the firm to allow you to administer your program (*e.g.*, information that would appear in your DBE Directory).

(3) If an ANC-related firm does not meet all the conditions of paragraph (i)(1) of this section, then it must meet the requirements of paragraph (h) of this section in order to be certified, on the same basis as firms owned by Indian Tribes or Native Hawaiian Organizations.

[64 FR 5126, Feb. 2, 1999, as amended at 68 FR 35555, June 16, 2003]

Subpart E—Certification Procedures

§ 26.81 What are the requirements for Unified Certification Programs?

(a) You and all other DOT recipients in your state must participate in a Unified Certification Program (UCP).

(1) Within three years of March 4, 1999, you and the other recipients in your state must sign an agreement establishing the UCP for that state and submit the agreement to the Secretary for approval. The Secretary may, on the basis of extenuating circumstances shown by the recipients in the state, extend this deadline for no more than one additional year.

(2) The agreement must provide for the establishment of a UCP meeting all the requirements of this section. The agreement must specify that the UCP will follow all certification procedures and standards of this part, on the same basis as recipients; that the UCP shall cooperate fully with oversight, review, and monitoring activities of DOT and its operating administrations; and that the UCP shall implement DOT directives and guidance concerning certification matters. The agreement shall also commit recipients to ensuring that the UCP has sufficient resources and expertise to carry out the requirements of this part. The agreement shall include an implementation schedule ensuring that the UCP is fully operational no later than 18 months following the approval of the agreement by the Secretary.

(3) Subject to approval by the Secretary, the UCP in each state may take any form acceptable to the recipients in that state.

(4) The Secretary shall review the UCP and approve it, disapprove it, or remand it to the recipients in the state for revisions. A complete agreement which is not disapproved or remanded within 180 days of its receipt is deemed to be accepted.

(5) If you and the other recipients in your state fail to meet the deadlines set forth in this paragraph (a), you shall have the opportunity to make an explanation to the Secretary why a deadline could not be met and why meeting the deadline was beyond your

control. If you fail to make such an explanation, or the explanation does not justify the failure to meet the deadline, the Secretary shall direct you to complete the required action by a date certain. If you and the other recipients fail to carry out this direction in a timely manner, you are collectively in noncompliance with this part.

(b) The UCP shall make all certification decisions on behalf of all DOT recipients in the state with respect to participation in the DOT DBE Program.

(1) Certification decisions by the UCP shall be binding on all DOT recipients within the state.

(2) The UCP shall provide ''one-stop shopping'' to applicants for certification, such that an applicant is required to apply only once for a DBE certification that will be honored by all recipients in the state.

(3) All obligations of recipients with respect to certification and nondiscrimination must be carried out by UCPs, and recipients may use only UCPs that comply with the certification and nondiscrimination requirements of this part.

(c) All certifications by UCPs shall be pre-certifications; i.e., certifications that have been made final before the due date for bids or offers on a contract on which a firm seeks to participate as a DBE.

(d) A UCP is not required to process an application for certification from a firm having its principal place of business outside the state if the firm is not certified by the UCP in the state in which it maintains its principal place of business. The ''home state'' UCP shall share its information and documents concerning the firm with other UCPs that are considering the firm's application.

(e) Subject to DOT approval as provided in this section, the recipients in two or more states may form a regional UCP. UCPs may also enter into written reciprocity agreements with other UCPs. Such an agreement shall outline the specific responsibilities of each participant. A UCP may accept the certification of any other UCP or DOT recipient.

(f) Pending the establishment of UCPs meeting the requirements of this section, you may enter into agreements with other recipients, on a regional or inter-jurisdictional basis, to perform certification functions required by this part. You may also grant reciprocity to other recipient's certification decisions.

(g) Each UCP shall maintain a unified DBE directory containing, for all firms certified by the UCP (including those from other states certified under the provisions of this section), the information required by §26.31. The UCP shall make the directory available to the public electronically, on the internet, as well as in print. The UCP shall update the electronic version of the directory by including additions, deletions, and other changes as soon as they are made.

(h) Except as otherwise specified in this section, all provisions of this subpart and subpart D of this part pertaining to recipients also apply to UCPs.

§26.83 What procedures do recipients follow in making certification decisions?

(a) You must ensure that only firms certified as eligible DBEs under this section participate as DBEs in your program.

(b) You must determine the eligibility of firms as DBEs consistent with the standards of subpart D of this part. When a UCP is formed, the UCP must meet all the requirements of subpart D of this part and this subpart that recipients are required to meet.

(c) You must take all the following steps in determining whether a DBE firm meets the standards of subpart D of this part:

(1) Perform an on-site visit to the offices of the firm. You must interview the principal officers of the firm and review their résumés and/or work histories. You must also perform an on-site visit to job sites if there are such sites on which the firm is working at the time of the eligibility investigation in your jurisdiction or local area. You may rely upon the site visit report of any other recipient with respect to a firm applying for certification;

(2) If the firm is a corporation, analyze the ownership of stock in the firm;

(3) Analyze the bonding and financial capacity of the firm;

(4) Determine the work history of the firm, including contracts it has received and work it has completed;

(5) Obtain a statement from the firm of the type of work it prefers to perform as part of the DBE program and its preferred locations for performing the work, if any;

(6) Obtain or compile a list of the equipment owned by or available to the firm and the licenses the firm and its key personnel possess to perform the work it seeks to do as part of the DBE program;

(7) Require potential DBEs to complete and submit an appropriate application form, unless the potential DBE is an SBA certified firm applying pursuant to the DOT/SBA MOU.

(i) You must use the application form provided in Appendix F to this part without change or revision. However, you may provide in your DBE program, with the approval of the concerned operating administration, for supplementing the form by requesting additional information not inconsistent with this part.

(ii) You must make sure that the applicant attests to the accuracy and truthfulness of the information on the application form. This shall be done either in the form of an affidavit sworn to by the applicant before a person who is authorized by state law to administer oaths or in the form of an unsworn declaration executed under penalty of perjury of the laws of the United States.

(iii) You must review all information on the form prior to making a decision about the eligibility of the firm.

(d) When another recipient, in connection with its consideration of the eligibility of a firm, makes a written request for certification information you have obtained about that firm (e.g., including application materials or the report of a site visit, if you have made one to the firm), you must promptly make the information available to the other recipient.

(e) When another DOT recipient has certified a firm, you have discretion to take any of the following actions:

(1) Certify the firm in reliance on the certification decision of the other recipient;

(2) Make an independent certification decision based on documentation provided by the other recipient, augmented by any additional information you require the applicant to provide; or

(3) Require the applicant to go through your application process without regard to the action of the other recipient.

(f) Subject to the approval of the concerned operating administration as part of your DBE program, you may impose a reasonable application fee for certification. Fee waivers shall be made in appropriate cases.

(g) You must safeguard from disclosure to unauthorized persons information gathered as part of the certification process that may reasonably be regarded as proprietary or other confidential business information, consistent with applicable Federal, state, and local law.

(h) Once you have certified a DBE, it shall remain certified for a period of at least three years unless and until its certification has been removed through the procedures of § 26.87. You may not require DBEs to reapply for certification as a condition of continuing to participate in the program during this three-year period, unless the factual basis on which the certification was made changes.

(i) If you are a DBE, you must inform the recipient or UCP in writing of any change in circumstances affecting your ability to meet size, disadvantaged status, ownership, or control requirements of this part or any material change in the information provided in your application form.

(1) Changes in management responsibility among members of a limited liability company are covered by this requirement.

(2) You must attach supporting documentation describing in detail the nature of such changes.

(3) The notice must take the form of an affidavit sworn to by the applicant before a person who is authorized by state law to administer oaths or of an unsworn declaration executed under penalty of perjury of the laws of the United States. You must provide the

written notification within 30 days of the occurrence of the change. If you fail to make timely notification of such a change, you will be deemed to have failed to cooperate under §26.109(c).

(j) If you are a DBE, you must provide to the recipient, every year on the anniversary of the date of your certification, an affidavit sworn to by the firm's owners before a person who is authorized by state law to administer oaths or an unsworn declaration executed under penalty of perjury of the laws of the United States. This affidavit must affirm that there have been no changes in the firm's circumstances affecting its ability to meet size, disadvantaged status, ownership, or control requirements of this part or any material changes in the information provided in its application form, except for changes about which you have notified the recipient under paragraph (i) of this section. The affidavit shall specifically affirm that your firm continues to meet SBA business size criteria and the overall gross receipts cap of this part, documenting this affirmation with supporting documentation of your firm's size and gross receipts. If you fail to provide this affidavit in a timely manner, you will be deemed to have failed to cooperate under §26.109(c).

(k) If you are a recipient, you must make decisions on applications for certification within 90 days of receiving from the applicant firm all information required under this part. You may extend this time period once, for no more than an additional 60 days, upon written notice to the firm, explaining fully and specifically the reasons for the extension. You may establish a different time frame in your DBE program, upon a showing that this time frame is not feasible, and subject to the approval of the concerned operating administration. Your failure to make a decision by the applicable deadline under this paragraph is deemed a constructive denial of the application, on the basis of which the firm may appeal to DOT under §26.89.

[64 FR 5126, Feb. 2, 1999, as amended at 68 FR 35555, June 16, 2003]

§26.84 How do recipients process applications submitted pursuant to the DOT/SBA MOU?

(a) When an SBA-certified firm applies for certification pursuant to the DOT/SBA MOU, you must accept the certification applications, forms and packages submitted by a firm to the SBA for either the 8(a) BD or SDB programs, in lieu of requiring the applicant firm to complete your own application forms and packages. The applicant may submit the package directly, or may request that the SBA forward the package to you. Pursuant to the MOU, the SBA will forward the package within thirty days.

(b) If necessary, you may request additional relevant information from the SBA. The SBA will provide this additional material within forty-five days of your written request.

(c) Before certifying a firm based on its 8(a) BD or SDB certification, you must conduct an on-site review of the firm (*see* §26.83(c)(1)). If the SBA conducted an on-site review, you may rely on the SBA's report of the on-site review. In connection with this review, you may also request additional relevant information from the firm.

(d) Unless you determine, based on the on-site review and information obtained in connection with it, that the firm does not meet the eligibility requirements of Subpart D of this part, you must certify the firm.

(e) You are not required to process an application for certification from an SBA-certified firm having its principal place of business outside the state(s) in which you operate unless there is a report of a ''home state'' on-site review on which you may rely.

(f) You are not required to process an application for certification from an SBA-certified firm if the firm does not provide products or services that you use in your DOT-assisted programs or airport concessions.

[68 FR 35555, June 16, 2003]

§26.85 How do recipients respond to requests from DBE-certified firms or the SBA made pursuant to the DOT/SBA MOU?

(a) Upon receipt of a signed, written request from a DBE-certified firm, you must transfer to the SBA a copy of the

firm's application package. You must transfer this information within thirty days of receipt of the request.

(b) If necessary, the SBA may make a written request to the recipient for additional materials (*e.g.*, the report of the on-site review). You must provide a copy of this material to the SBA within forty-five days of the additional request.

(c) You must provide appropriate assistance to SBA-certified firms, including providing information pertaining to the DBE application process, filing locations, required documentation and status of applications.

[68 FR 35555, June 16, 2003]

§ 26.86 What rules govern recipients' denials of initial requests for certification?

(a) When you deny a request by a firm, which is not currently certified with you, to be certified as a DBE, you must provide the firm a written explanation of the reasons for the denial, specifically referencing the evidence in the record that supports each reason for the denial. All documents and other information on which the denial is based must be made available to the applicant, on request.

(b) When you deny DBE certification to a firm certified by the SBA, you must notify the SBA in writing. The notification must include the reason for denial.

(c) When a firm is denied certification, you must establish a time period of no more than twelve months that must elapse before the firm may reapply to the recipient for certification. You may provide, in your DBE program, subject to approval by the concerned operating administration, a shorter waiting period for reapplication. The time period for reapplication begins to run on the date the explanation required by paragraph (a) of this section is received by the firm.

(d) When you make an administratively final denial of certification concerning a firm, the firm may appeal the denial to the Department under § 26.89.

[64 FR 5126, Feb. 2, 1999. Redesignated and amended at 68 FR 35555, June 16, 2003]

§ 26.87 What procedures does a recipient use to remove a DBE's eligibility?

(a) *Ineligibility complaints.* (1) Any person may file with you a written complaint alleging that a currently-certified firm is ineligible and specifying the alleged reasons why the firm is ineligible. You are not required to accept a general allegation that a firm is ineligible or an anonymous complaint. The complaint may include any information or arguments supporting the complainant's assertion that the firm is ineligible and should not continue to be certified. Confidentiality of complainants' identities must be protected as provided in § 26.109(b).

(2) You must review your records concerning the firm, any material provided by the firm and the complainant, and other available information. You may request additional information from the firm or conduct any other investigation that you deem necessary.

(3) If you determine, based on this review, that there is reasonable cause to believe that the firm is ineligible, you must provide written notice to the firm that you propose to find the firm ineligible, setting forth the reasons for the proposed determination. If you determine that such reasonable cause does not exist, you must notify the complainant and the firm in writing of this determination and the reasons for it. All statements of reasons for findings on the issue of reasonable cause must specifically reference the evidence in the record on which each reason is based.

(b) *Recipient-initiated proceedings.* If, based on notification by the firm of a change in its circumstances or other information that comes to your attention, you determine that there is reasonable cause to believe that a currently certified firm is ineligible, you must provide written notice to the firm that you propose to find the firm ineligible, setting forth the reasons for the proposed determination. The statement of reasons for the finding of reasonable cause must specifically reference the evidence in the record on which each reason is based.

(c) *DOT directive to initiate proceeding.* (1) If the concerned operating administration determines that information in

your certification records, or other information available to the concerned operating administration, provides reasonable cause to believe that a firm you certified does not meet the eligibility criteria of this part, the concerned operating administration may direct you to initiate a proceeding to remove the firm's certification.

(2) The concerned operating administration must provide you and the firm a notice setting forth the reasons for the directive, including any relevant documentation or other information.

(3) You must immediately commence and prosecute a proceeding to remove eligibility as provided by paragraph (b) of this section.

(d) *Hearing.* When you notify a firm that there is reasonable cause to remove its eligibility, as provided in paragraph (a), (b), or (c) of this section, you must give the firm an opportunity for an informal hearing, at which the firm may respond to the reasons for the proposal to remove its eligibility in person and provide information and arguments concerning why it should remain certified.

(1) In such a proceeding, you bear the burden of proving, by a preponderance of the evidence, that the firm does not meet the certification standards of this part.

(2) You must maintain a complete record of the hearing, by any means acceptable under state law for the retention of a verbatim record of an administrative hearing. If there is an appeal to DOT under §26.89, you must provide a transcript of the hearing to DOT and, on request, to the firm. You must retain the original record of the hearing. You may charge the firm only for the cost of copying the record.

(3) The firm may elect to present information and arguments in writing, without going to a hearing. In such a situation, you bear the same burden of proving, by a preponderance of the evidence, that the firm does not meet the certification standards, as you would during a hearing.

(e) *Separation of functions.* You must ensure that the decision in a proceeding to remove a firm's eligibility is made by an office and personnel that did not take part in actions leading to or seeking to implement the proposal to remove the firm's eligibility and are not subject, with respect to the matter, to direction from the office or personnel who did take part in these actions.

(1) Your method of implementing this requirement must be made part of your DBE program.

(2) The decisionmaker must be an individual who is knowledgeable about the certification requirements of your DBE program and this part.

(3) Before a UCP is operational in its state, a small airport or small transit authority (i.e., an airport or transit authority serving an area with less than 250,000 population) is required to meet this requirement only to the extent feasible.

(f) *Grounds for decision.* You must not base a decision to remove eligibility on a reinterpretation or changed opinion of information available to the recipient at the time of its certification of the firm. You may base such a decision only on one or more of the following:

(1) Changes in the firm's circumstances since the certification of the firm by the recipient that render the firm unable to meet the eligibility standards of this part;

(2) Information or evidence not available to you at the time the firm was certified;

(3) Information that was concealed or misrepresented by the firm in previous certification actions by a recipient;

(4) A change in the certification standards or requirements of the Department since you certified the firm; or

(5) A documented finding that your determination to certify the firm was factually erroneous.

(g) *Notice of decision.* Following your decision, you must provide the firm written notice of the decision and the reasons for it, including specific references to the evidence in the record that supports each reason for the decision. The notice must inform the firm of the consequences of your decision and of the availability of an appeal to the Department of Transportation under §26.89. You must send copies of the notice to the complainant in an ineligibility complaint or the concerned operating administration that had directed you to initiate the proceeding.

(h) When you decertify a DBE firm certified by the SBA, you must notify the SBA in writing. The notification must include the reason for denial.

(i) *Status of firm during proceeding.* (1) A firm remains an eligible DBE during the pendancy of your proceeding to remove its eligibility.

(2) The firm does not become ineligible until the issuance of the notice provided for in paragraph (g) of this section.

(j) *Effects of removal of eligibility.* When you remove a firm's eligibility, you must take the following action:

(1) When a prime contractor has made a commitment to using the ineligible firm, or you have made a commitment to using a DBE prime contractor, but a subcontract or contract has not been executed before you issue the decertification notice provided for in paragraph (g) of this section, the ineligible firm does not count toward the contract goal or overall goal. You must direct the prime contractor to meet the contract goal with an eligible DBE firm or demonstrate to you that it has made a good faith effort to do so.

(2) If a prime contractor has executed a subcontract with the firm before you have notified the firm of its ineligibility, the prime contractor may continue to use the firm on the contract and may continue to receive credit toward its DBE goal for the firm's work. In this case, or in a case where you have let a prime contract to the DBE that was later ruled ineligible, the portion of the ineligible firm's performance of the contract remaining after you issued the notice of its ineligibility shall not count toward your overall goal, but may count toward the contract goal.

(3) *Exception:* If the DBE's ineligibility is caused solely by its having exceeded the size standard during the performance of the contract, you may continue to count its participation on that contract toward overall and contract goals.

(k) *Availability of appeal.* When you make an administratively final removal of a firm's eligibility under this section, the firm may appeal the removal to the Department under § 26.89.

[64 FR 5126, Feb. 2, 1999, as amended at 68 FR 35556, June 16, 2003]

§ 26.89 What is the process for certification appeals to the Department of Transportation?

(a)(1) If you are a firm that is denied certification or whose eligibility is removed by a recipient, including SBA-certified firms applying pursuant to the DOT/SBA MOU, you may make an administrative appeal to the Department.

(2) If you are a complainant in an ineligibility complaint to a recipient (including the concerned operating administration in the circumstances provided in § 26.87(c)), you may appeal to the Department if the recipient does not find reasonable cause to propose removing the firm's eligibility or, following a removal of eligibility proceeding, determines that the firm is eligible.

(3) Send appeals to the following address: Department of Transportation, Office of Civil Rights, 1200 New Jersey Avenue, SE., Washington, DC 20590.

(b) Pending the Department's decision in the matter, the recipient's decision remains in effect. The Department does not stay the effect of the recipient's decision while it is considering an appeal.

(c) If you want to file an appeal, you must send a letter to the Department within 90 days of the date of the recipient's final decision, including information and arguments concerning why the recipient's decision should be reversed. The Department may accept an appeal filed later than 90 days after the date of the decision if the Department determines that there was good cause for the late filing of the appeal.

(1) If you are an appellant who is a firm which has been denied certification, whose certification has been removed, whose owner is determined not to be a member of a designated disadvantaged group, or concerning whose owner the presumption of disadvantage has been rebutted, your letter must state the name and address of any other recipient which currently certifies the firm, which has rejected an application for certification from the firm or removed the firm's eligibility within one year prior to the date of the appeal, or before which an application for certification or a removal of eligibility is pending. Failure to provide

this information may be deemed a failure to cooperate under § 26.109(c).

(2) If you are an appellant other than one described in paragraph (c)(1) of this section, the Department will request, and the firm whose certification has been questioned shall promptly provide, the information called for in paragraph (c)(1) of this section. Failure to provide this information may be deemed a failure to cooperate under § 26.109(c).

(d) When it receives an appeal, the Department requests a copy of the recipient's complete administrative record in the matter. If you are the recipient, you must provide the administrative record, including a hearing transcript, within 20 days of the Department's request. The Department may extend this time period on the basis of a recipient's showing of good cause. To facilitate the Department's review of a recipient's decision, you must ensure that such administrative records are well organized, indexed, and paginated. Records that do not comport with these requirements are not acceptable and will be returned to you to be corrected immediately. If an appeal is brought concerning one recipient's certification decision concerning a firm, and that recipient relied on the decision and/or administrative record of another recipient, this requirement applies to both recipients involved.

(e) The Department makes its decision based solely on the entire administrative record. The Department does not make a de novo review of the matter and does not conduct a hearing. The Department may supplement the administrative record by adding relevant information made available by the DOT Office of Inspector General; Federal, state, or local law enforcement authorities; officials of a DOT operating administration or other appropriate DOT office; a recipient; or a firm or other private party.

(f) As a recipient, when you provide supplementary information to the Department, you shall also make this information available to the firm and any third-party complainant involved, consistent with Federal or applicable state laws concerning freedom of information and privacy. The Department makes available, on request by the firm and any third-party complainant involved, any supplementary information it receives from any source.

(1) The Department affirms your decision unless it determines, based on the entire administrative record, that your decision is unsupported by substantial evidence or inconsistent with the substantive or procedural provisions of this part concerning certification.

(2) If the Department determines, after reviewing the entire administrative record, that your decision was unsupported by substantial evidence or inconsistent with the substantive or procedural provisions of this part concerning certification, the Department reverses your decision and directs you to certify the firm or remove its eligibility, as appropriate. You must take the action directed by the Department's decision immediately upon receiving written notice of it.

(3) The Department is not required to reverse your decision if the Department determines that a procedural error did not result in fundamental unfairness to the appellant or substantially prejudice the opportunity of the appellant to present its case.

(4) If it appears that the record is incomplete or unclear with respect to matters likely to have a significant impact on the outcome of the case, the Department may remand the record to you with instructions seeking clarification or augmentation of the record before making a finding. The Department may also remand a case to you for further proceedings consistent with Department instructions concerning the proper application of the provisions of this part.

(5) The Department does not uphold your decision based on grounds not specified in your decision.

(6) The Department's decision is based on the status and circumstances of the firm as of the date of the decision being appealed.

(7) The Department provides written notice of its decision to you, the firm, and the complainant in an ineligibility complaint. A copy of the notice is also sent to any other recipient whose administrative record or decision has been involved in the proceeding (*see*

paragraph (d) of this section). The Department will also notify the SBA in writing when DOT takes an action on an appeal that results in or confirms a loss of eligibility to any SBA-certified firm. The notice includes the reasons for the Department's decision, including specific references to the evidence in the record that supports each reason for the decision.

(8) The Department's policy is to make its decision within 180 days of receiving the complete administrative record. If the Department does not make its decision within this period, the Department provides written notice to concerned parties, including a statement of the reason for the delay and a date by which the appeal decision will be made.

(g) All decisions under this section are administratively final, and are not subject to petitions for reconsideration.

[64 FR 5126, Feb. 2, 1999, as amended at 65 FR 68951, Nov. 15, 2000; 68 FR 35556, June 16, 2003; 73 FR 33329, June 12, 2008]

§ 26.91 What actions do recipients take following DOT certification appeal decisions?

(a) If you are the recipient from whose action an appeal under § 26.89 is taken, the decision is binding. It is not binding on other recipients.

(b) If you are a recipient to which a DOT determination under § 26.89 is applicable, you must take the following action:

(1) If the Department determines that you erroneously certified a firm, you must remove the firm's eligibility on receipt of the determination, without further proceedings on your part. Effective on the date of your receipt of the Department's determination, the consequences of a removal of eligibility set forth in § 26.87(i) take effect.

(2) If the Department determines that you erroneously failed to find reasonable cause to remove the firm's eligibility, you must expeditiously commence a proceeding to determine whether the firm's eligibility should be removed, as provided in § 26.87.

(3) If the Department determines that you erroneously declined to certify or removed the eligibility of the firm, you must certify the firm, effective on the date of your receipt of the written notice of Department's determination.

(4) If the Department determines that you erroneously determined that the presumption of social and economic disadvantage either should or should not be deemed rebutted, you must take appropriate corrective action as determined by the Department.

(5) If the Department affirms your determination, no further action is necessary.

(c) Where DOT has upheld your denial of certification to or removal of eligibility from a firm, or directed the removal of a firm's eligibility, other recipients with whom the firm is certified may commence a proceeding to remove the firm's eligibility under § 26.87. Such recipients must not remove the firm's eligibility absent such a proceeding. Where DOT has reversed your denial of certification to or removal of eligibility from a firm, other recipients must take the DOT action into account in any certification action involving the firm. However, other recipients are not required to certify the firm based on the DOT decision.

Subpart F—Compliance and Enforcement

§ 26.101 What compliance procedures apply to recipients?

(a) If you fail to comply with any requirement of this part, you may be subject to formal enforcement action under § 26.103 or § 26.105 or appropriate program sanctions by the concerned operating administration, such as the suspension or termination of Federal funds, or refusal to approve projects, grants or contracts until deficiencies are remedied. Program sanctions may include, in the case of the FHWA program, actions provided for under 23 CFR 1.36; in the case of the FAA program, actions consistent with 49 U.S.C. 47106(d), 47111(d), and 47122; and in the case of the FTA program, any actions permitted under 49 U.S.C. chapter 53 or applicable FTA program requirements.

(b) As provided in statute, you will not be subject to compliance actions or sanctions for failing to carry out any requirement of this part because you have been prevented from complying

because a Federal court has issued a final order in which the court found that the requirement is unconstitutional.

§ 26.103 What enforcement actions apply in FHWA and FTA programs?

The provisions of this section apply to enforcement actions under FHWA and FTA programs:

(a) *Noncompliance complaints.* Any person who believes that a recipient has failed to comply with its obligations under this part may file a written complaint with the concerned operating administration's Office of Civil Rights. If you want to file a complaint, you must do so no later than 180 days after the date of the alleged violation or the date on which you learned of a continuing course of conduct in violation of this part. In response to your written request, the Office of Civil Rights may extend the time for filing in the interest of justice, specifying in writing the reason for so doing. The Office of Civil Rights may protect the confidentiality of your identity as provided in §26.109(b). Complaints under this part are limited to allegations of violation of the provisions of this part.

(b) *Compliance reviews.* The concerned operating administration may review the recipient's compliance with this part at any time, including reviews of paperwork and on-site reviews, as appropriate. The Office of Civil Rights may direct the operating administration to initiate a compliance review based on complaints received.

(c) *Reasonable cause notice.* If it appears, from the investigation of a complaint or the results of a compliance review, that you, as a recipient, are in noncompliance with this part, the appropriate DOT office promptly sends you, return receipt requested, a written notice advising you that there is reasonable cause to find you in noncompliance. The notice states the reasons for this finding and directs you to reply within 30 days concerning whether you wish to begin conciliation.

(d) *Conciliation.* (1) If you request conciliation, the appropriate DOT office shall pursue conciliation for at least 30, but not more than 120, days from the date of your request. The appropriate DOT office may extend the conciliation period for up to 30 days for good cause, consistent with applicable statutes.

(2) If you and the appropriate DOT office sign a conciliation agreement, then the matter is regarded as closed and you are regarded as being in compliance. The conciliation agreement sets forth the measures you have taken or will take to ensure compliance. While a conciliation agreement is in effect, you remain eligible for FHWA or FTA financial assistance.

(3) The concerned operating administration shall monitor your implementation of the conciliation agreement and ensure that its terms are complied with. If you fail to carry out the terms of a conciliation agreement, you are in noncompliance.

(4) If you do not request conciliation, or a conciliation agreement is not signed within the time provided in paragraph (d)(1) of this section, then enforcement proceedings begin.

(e) *Enforcement actions.* (1) Enforcement actions are taken as provided in this subpart.

(2) Applicable findings in enforcement proceedings are binding on all DOT offices.

§ 26.105 What enforcement actions apply in FAA programs?

(a) Compliance with all requirements of this part by airport sponsors and other recipients of FAA financial assistance is enforced through the procedures of Title 49 of the United States Code, including 49 U.S.C. 47106(d), 47111(d), and 47122, and regulations implementing them.

(b) The provisions of §26.103(b) and this section apply to enforcement actions in FAA programs.

(c) Any person who knows of a violation of this part by a recipient of FAA funds may file a complaint under 14 CFR part 16 with the Federal Aviation Administration Office of Chief Counsel.

§ 26.107 What enforcement actions apply to firms participating in the DBE program?

(a) If you are a firm that does not meet the eligibility criteria of subpart D of this part and that attempts to participate in a DOT-assisted program as a DBE on the basis of false, fraudulent,

or deceitful statements or representations or under circumstances indicating a serious lack of business integrity or honesty, the Department may initiate suspension or debarment proceedings against you under 49 CFR part 29.

(b) If you are a firm that, in order to meet DBE contract goals or other DBE program requirements, uses or attempts to use, on the basis of false, fraudulent or deceitful statements or representations or under circumstances indicating a serious lack of business integrity or honesty, another firm that does not meet the eligibility criteria of subpart D of this part, the Department may initiate suspension or debarment proceedings against you under 49 CFR part 29.

(c) In a suspension or debarment proceeding brought under paragraph (a) or (b) of this section, the concerned operating administration may consider the fact that a purported DBE has been certified by a recipient. Such certification does not preclude the Department from determining that the purported DBE, or another firm that has used or attempted to use it to meet DBE goals, should be suspended or debarred.

(d) The Department may take enforcement action under 49 CFR Part 31, Program Fraud and Civil Remedies, against any participant in the DBE program whose conduct is subject to such action under 49 CFR part 31.

(e) The Department may refer to the Department of Justice, for prosecution under 18 U.S.C. 1001 or other applicable provisions of law, any person who makes a false or fraudulent statement in connection with participation of a DBE in any DOT-assisted program or otherwise violates applicable Federal statutes.

§ 26.109 What are the rules governing information, confidentiality, cooperation, and intimidation or retaliation?

(a) *Availability of records.* (1) In responding to requests for information concerning any aspect of the DBE program, the Department complies with provisions of the Federal Freedom of Information and Privacy Acts (5 U.S.C. 552 and 552a). The Department may make available to the public any information concerning the DBE program release of which is not prohibited by Federal law.

(2) Notwithstanding any provision of Federal or state law, you must not release information that may be reasonably be construed as confidential business information to any third party without the written consent of the firm that submitted the information. This includes applications for DBE certification and supporting documentation. However, you must transmit this information to DOT in any certification appeal proceeding under § 26.89 in which the disadvantaged status of the individual is in question.

(b) *Confidentiality of information on complainants.* Notwithstanding the provisions of paragraph (a) of this section, the identity of complainants shall be kept confidential, at their election. If such confidentiality will hinder the investigation, proceeding or hearing, or result in a denial of appropriate administrative due process to other parties, the complainant must be advised for the purpose of waiving the privilege. Complainants are advised that, in some circumstances, failure to waive the privilege may result in the closure of the investigation or dismissal of the proceeding or hearing. FAA follows the procedures of 14 CFR part 16 with respect to confidentiality of information in complaints.

(c) *Cooperation.* All participants in the Department's DBE program (including, but not limited to, recipients, DBE firms and applicants for DBE certification, complainants and appellants, and contractors using DBE firms to meet contract goals) are required to cooperate fully and promptly with DOT and recipient compliance reviews, certification reviews, investigations, and other requests for information. Failure to do so shall be a ground for appropriate action against the party involved (e.g., with respect to recipients, a finding of noncompliance; with respect to DBE firms, denial of certification or removal of eligibility and/or suspension and debarment; with respect to a complainant or appellant, dismissal of the complaint or appeal; with respect to a contractor which uses DBE firms to meet goals, findings of

non-responsibility for future contracts and/or suspension and debarment).

(d) *Intimidation and retaliation.* If you are a recipient, contractor, or any other participant in the program, you must not intimidate, threaten, coerce, or discriminate against any individual or firm for the purpose of interfering with any right or privilege secured by this part or because the individual or firm has made a complaint, testified, assisted, or participated in any manner in an investigation, proceeding, or hearing under this part. If you violate this prohibition, you are in noncompliance with this part.

[64 FR 5126, Feb. 2, 1999, as amended at 68 FR 35556, June 16, 2003]

APPENDIX A TO PART 26—GUIDANCE CONCERNING GOOD FAITH EFFORTS

I. When, as a recipient, you establish a contract goal on a DOT-assisted contract, a bidder must, in order to be responsible and/or responsive, make good faith efforts to meet the goal. The bidder can meet this requirement in either of two ways. First, the bidder can meet the goal, documenting commitments for participation by DBE firms sufficient for this purpose. Second, even if it doesn't meet the goal, the bidder can document adequate good faith efforts. This means that the bidder must show that it took all necessary and reasonable steps to achieve a DBE goal or other requirement of this part which, by their scope, intensity, and appropriateness to the objective, could reasonably be expected to obtain sufficient DBE participation, even if they were not fully successful.

II. In any situation in which you have established a contract goal, part 26 requires you to use the good faith efforts mechanism of this part. As a recipient, it is up to you to make a fair and reasonable judgment whether a bidder that did not meet the goal made adequate good faith efforts. It is important for you to consider the quality, quantity, and intensity of the different kinds of efforts that the bidder has made. The efforts employed by the bidder should be those that one could reasonably expect a bidder to take if the bidder were actively and aggressively trying to obtain DBE participation sufficient to meet the DBE contract goal. Mere *pro forma* efforts are not good faith efforts to meet the DBE contract requirements. We emphasize, however, that your determination concerning the sufficiency of the firm's good faith efforts is a judgment call: meeting quantitative formulas is not required.

III. The Department also strongly cautions you against requiring that a bidder meet a contract goal (i.e., obtain a specified amount of DBE participation) in order to be awarded a contract, even though the bidder makes an adequate good faith efforts showing. This rule specifically prohibits you from ignoring *bona fide* good faith efforts.

IV. The following is a list of types of actions which you should consider as part of the bidder's good faith efforts to obtain DBE participation. It is not intended to be a mandatory checklist, nor is it intended to be exclusive or exhaustive. Other factors or types of efforts may be relevant in appropriate cases.

A. Soliciting through all reasonable and available means (e.g. attendance at pre-bid meetings, advertising and/or written notices) the interest of all certified DBEs who have the capability to perform the work of the contract. The bidder must solicit this interest within sufficient time to allow the DBEs to respond to the solicitation. The bidder must determine with certainty if the DBEs are interested by taking appropriate steps to follow up initial solicitations.

B. Selecting portions of the work to be performed by DBEs in order to increase the likelihood that the DBE goals will be achieved. This includes, where appropriate, breaking out contract work items into economically feasible units to facilitate DBE participation, even when the prime contractor might otherwise prefer to perform these work items with its own forces.

C. Providing interested DBEs with adequate information about the plans, specifications, and requirements of the contract in a timely manner to assist them in responding to a solicitation.

D. (1) Negotiating in good faith with interested DBEs. It is the bidder's responsibility to make a portion of the work available to DBE subcontractors and suppliers and to select those portions of the work or material needs consistent with the available DBE subcontractors and suppliers, so as to facilitate DBE participation. Evidence of such negotiation includes the names, addresses, and telephone numbers of DBEs that were considered; a description of the information provided regarding the plans and specifications for the work selected for subcontracting; and evidence as to why additional agreements could not be reached for DBEs to perform the work.

(2) A bidder using good business judgment would consider a number of factors in negotiating with subcontractors, including DBE subcontractors, and would take a firm's price and capabilities as well as contract goals into consideration. However, the fact that there may be some additional costs involved in finding and using DBEs is not in itself sufficient reason for a bidder's failure to meet the contract DBE goal, as long as such costs are reasonable. Also, the ability or desire of a prime contractor to perform

the work of a contract with its own organization does not relieve the bidder of the responsibility to make good faith efforts. Prime contractors are not, however, required to accept higher quotes from DBEs if the price difference is excessive or unreasonable.

E. Not rejecting DBEs as being unqualified without sound reasons based on a thorough investigation of their capabilities. The contractor's standing within its industry, membership in specific groups, organizations, or associations and political or social affiliations (for example union vs. non-union employee status) are not legitimate causes for the rejection or non-solicitation of bids in the contractor's efforts to meet the project goal.

F. Making efforts to assist interested DBEs in obtaining bonding, lines of credit, or insurance as required by the recipient or contractor.

G. Making efforts to assist interested DBEs in obtaining necessary equipment, supplies, materials, or related assistance or services.

H. Effectively using the services of available minority/women community organizations; minority/women contractors' groups; local, state, and Federal minority/women business assistance offices; and other organizations as allowed on a case-by-case basis to provide assistance in the recruitment and placement of DBEs.

V. In determining whether a bidder has made good faith efforts, you may take into account the performance of other bidders in meeting the contract. For example, when the apparent successful bidder fails to meet the contract goal, but others meet it, you may reasonably raise the question of whether, with additional reasonable efforts, the apparent successful bidder could have met the goal. If the apparent successful bidder fails to meet the goal, but meets or exceeds the average DBE participation obtained by other bidders, you may view this, in conjunction with other factors, as evidence of the apparent successful bidder having made good faith efforts.

APPENDIX B TO PART 26—UNIFORM REPORT OF DBE AWARDS OR COMMITMENTS AND PAYMENTS FORM

INSTRUCTIONS FOR COMPLETING THE UNIFORM REPORT OF DBE AWARDS OR COMMITMENTS AND PAYMENTS

1. Indicate the DOT Operating Administration (OA) that provides your Federal financial assistance. If assistance comes from more than one OA, use separate reporting forms for each OA. If you are an FTA recipient, indicate your Vendor Number in the space provided.

2. If you are an FAA recipient, indicate the relevant AIP Numbers covered by this report. If more than six, attach a separate sheet.

3. Specify the Federal fiscal year (i.e., October 1 – September 30) in which the covered reporting period falls.

4. State the date of submission of this report.

5. Check the appropriate box that indicates the reporting period that the data provided in this report covers. If this report is due June 1, data should cover October 1 – March 31. If this report is due December 1, data should cover April 1 – September 30. If this report is due to the FAA, data should cover the entire year.

6. Name of the recipient.

7. State your annual DBE goal(s) established for the Federal fiscal year of this report to be submitted to and approved by the relevant OA. Your Overall Goal is to be reported as well as the breakdown for specific Race Conscious and Race Neutral Goals (both of which include gender-conscious/neutral goals). The Race Conscious Goal portion should be based on programs that focus on and provide benefits only for DBEs. The use of contract goals is a primary example of a Race Conscious measure. The Race Neutral Goal portion should include programs that, while benefiting DBEs, are not solely focused on DBE firms. For example, a small business outreach program, technical assistance, and prompt payment clauses can assist a wide variety of businesses in addition to helping DBE firms.

8-9. The amounts in items 8(A)-9(I) should include all types of prime contracts awarded and all types of subcontracts awarded or committed, including: professional or consultant services, construction, purchase of materials or supplies, lease or purchase of equipment and any other types of services. All dollar amounts are to reflect only the Federal share of such contracts, and should be rounded to the nearest dollar.

8(A). Provide the total dollar amount for all prime contracts assisted with DOT funds that were awarded during this reporting period.

8(B). Provide the total number of all prime contracts assisted with DOT funds that were awarded during this reporting period.

8(C). From the total dollar amount awarded in item 8(A), provide the dollar amount awarded to certified DBEs during this reporting period.

8(D). From the total number of prime contracts awarded in item 8(B), specify the number awarded to certified DBEs during this reporting period.

8(E). From the total dollars awarded in 8(C), provide the dollar amount awarded to DBEs though the use of Race Conscious methods. See the definition of Race Conscious Goal in item 7 and the explanation of project types in item 8 to include in your calculation.

8(F). From the total number of prime contracts awarded in 8(D), specify the number awarded to DBEs through Race Conscious methods.

8(G). From the total dollar amount awarded in item 8(C), provide the dollar amount awarded to certified DBEs through the use of Race Neutral methods. See the definition of Race Neutral Goal in item 7 and the explanation of project types in item 8 to include.

8(H). From the total number of prime contracts awarded in 8(D), specify the number awarded to DBEs through Race Neutral methods.

8(I). Of all prime contracts awarded this reporting period, calculate the percentage going to DBEs. Divide the dollar amount in item 8(C) by the dollar amount in item 8(A) to derive this percentage. Round percentage to the nearest tenth.

9(A)-9(I). Items 9(A)-9(I) are derived in the same way as items 8(A)-8(I), except that these calculations should be based on subcontracts rather than prime contracts. Unlike prime contracts, which may only be awarded, subcontracts may be either awarded or committed.

10(A)-11(I). For all DBEs awarded prime contracts and awarded or committed subcontracts as indicated in 8(C)-(D) and 9(C)-(D), break the data down further by total dollar amount as well as the number of all contracts going to each ethnic group as well as to non-minority women. The "Other" category includes those DBEs who are not members of the presumptively disadvantaged groups already listed, but who are determined eligible for the DBE program on an individual basis (e.g. a Caucasian male with a disability). The TOTALS value in 10(H) should equal the sum of 8(C) plus 9(C), and similarly, the TOTALS value in 11(H) should equal the sum of 8(D) plus 9(D). Column I should only be filled out if this report is due on December 1, as indicated in item 5. The values for this column are derived by adding the values reported in column H in your first report with the values reported in this second report.

12(A). Provide the total number of prime contracts completed during this reporting period that had Race Conscious goals. Race Conscious contracts are those with contract goals or another Race Conscious measure.

12(B). Provide the total dollar value of prime contracts completed this reporting period that had Race Conscious goals.

12(C). Provide the total dollar amount of DBE participation on all Race Conscious prime contracts completed this reporting period that was necessary to meet the contract goals on them. This applies only to Race Conscious prime contracts.

12(D). Provide the actual total DBE participation in dollars on the race conscious prime contracts completed this reporting period.

12(E). Of all the prime contracts completed this reporting period, calculate the percentage of DBE participation. Divide the actual total dollar amount in 12(D) by the total dollar value provided in 12(B) to derive this percentage. Round to the nearest tenth.

13(A)-13(E). Items 13(A)-13(E) are derived in the same manner as items 12(A)-12(E), except these figures should be based on Race Neutral prime contacts (i.e. those with no race conscious measures).

14(A)-14(E). Calculate the totals for each column by adding the race conscious and neutral figures provided in each row above.

15. Name of the Authorized Representative preparing this form.

16. Signature of the Authorized Representative.

17. Phone number of the Authorized Representative.

18. Fax number of the Authorized Representative.

****Submit your completed report to your Regional or Division Office.**

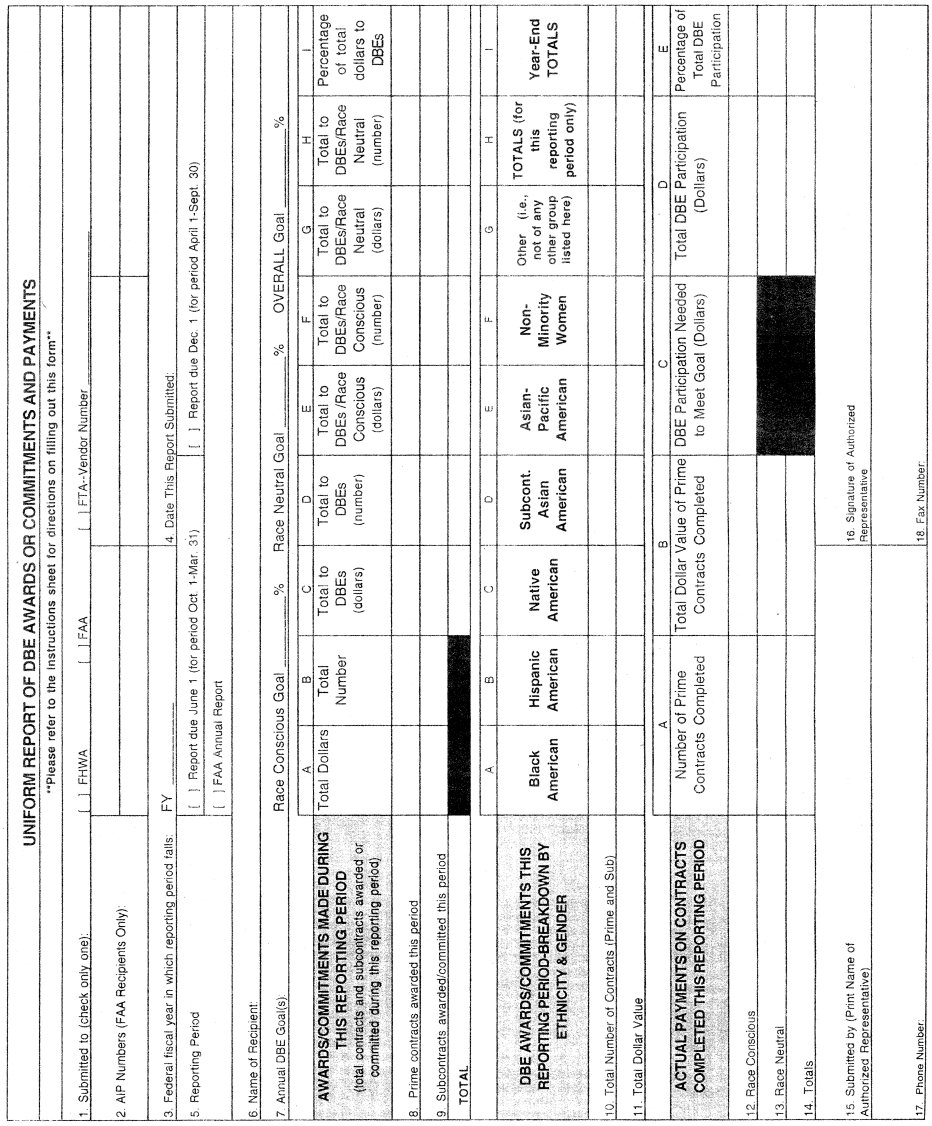

UNIFORM REPORT OF DBE AWARDS OR COMMITMENTS AND PAYMENTS

Please refer to the Instructions sheet for directions on filling out this form

1. Submitted to (check only one): [ ] FHWA [ ] FAA [ ] FTA--Vendor Number

2. AIP Numbers (FAA Recipients Only)

3. Federal fiscal year in which reporting period falls: FY

4. Date This Report Submitted:

5. Reporting Period: [ ] Report due June 1 (for period Oct. 1-Mar. 31) [ ] Report due Dec. 1 (for period April 1-Sept. 30)
[ ] FAA Annual Report

6. Name of Recipient

7. Annual DBE Goal(s): Race Conscious Goal _____% Race Neutral Goal _____% OVERALL Goal _____%

AWARDS/COMMITMENTS MADE DURING THIS REPORTING PERIOD (total contracts and subcontracts awarded or committed during this reporting period)	A Total Dollars	B Total Number	C Total to DBEs (dollars)	D Total to DBEs (number)	E Total to DBEs /Race Conscious (dollars)	F Total to DBEs/Race Conscious (number)	G Total to DBEs/Race Neutral (dollars)	H Total to DBEs/Race Neutral (number)	I Percentage of total dollars to DBEs
8. Prime contracts awarded this period									
9. Subcontracts awarded/committed this period									
TOTAL									

DBE AWARDS/COMMITMENTS THIS REPORTING PERIOD-BREAKDOWN BY ETHNICITY & GENDER	A Black American	B Hispanic American	C Native American	D Subcont. Asian American	E Asian-Pacific American	F Non-Minority Women	G Other (i.e., not of any other group listed here)	H TOTALS (for this reporting period only)	I Year-End TOTALS
10. Total Number of Contracts (Prime and Sub)									
11. Total Dollar Value									

ACTUAL PAYMENTS ON CONTRACTS COMPLETED THIS REPORTING PERIOD	A Number of Prime Contracts Completed	B Total Dollar Value of Prime Contracts Completed	C DBE Participation Needed to Meet Goal (Dollars)	D Total DBE Participation (Dollars)	E Percentage of Total DBE Participation
12. Race Conscious					
13. Race Neutral					
14. Totals					

15. Submitted by (Print Name of Authorized Representative)

16. Signature of Authorized Representative

17. Phone Number:

18. Fax Number:

[64 FR 5126, Feb. 2, 1999, as amended at 68 FR 35556, June 16, 2003]

APPENDIX C TO PART 26—DBE BUSINESS DEVELOPMENT PROGRAM GUIDELINES

The purpose of this program element is to further the development of DBEs, including but not limited to assisting them to move into non-traditional areas of work and/or compete in the marketplace outside the DBE program, via the provision of training and assistance from the recipient.

(A) Each firm that participates in a recipient's business development program (BDP) program is subject to a program term determined by the recipient. The term should consist of two stages; a developmental stage and a transitional stage.

(B) In order for a firm to remain eligible for program participation, it must continue to meet all eligibility criteria contained in part 26.

(C) By no later than 6 months of program entry, the participant should develop and submit to the recipient a comprehensive business plan setting forth the participant's business targets, objectives and goals. The participant will not be eligible for program benefits until such business plan is submitted and approved by the recipient. The approved business plan will constitute the participant's short and long term goals and the strategy for developmental growth to the point of economic viability in non-traditional areas of work and/or work outside the DBE program.

(D) The business plan should contain at least the following:

(1) An analysis of market potential, competitive environment and other business analyses estimating the program participant's prospects for profitable operation during the term of program participation and after graduation from the program.

(2) An analysis of the firm's strengths and weaknesses, with particular attention paid to the means of correcting any financial, managerial, technical, or labor conditions which could impede the participant from receiving contracts other than those in traditional areas of DBE participation.

(3) Specific targets, objectives, and goals for the business development of the participant during the next two years, utilizing the results of the analysis conducted pursuant to paragraphs (C) and (D)(1) of this appendix;

(4) Estimates of contract awards from the DBE program and from other sources which are needed to meet the objectives and goals for the years covered by the business plan; and

(5) Such other information as the recipient may require.

(E) Each participant should annually review its currently approved business plan with the recipient and modify the plan as may be appropriate to account for any changes in the firm's structure and redefined needs. The currently approved plan should be considered the applicable plan for all program purposes until the recipient approves in writing a modified plan. The recipient should establish an anniversary date for review of the participant's business plan and contract forecasts.

(F) Each participant should annually forecast in writing its need for contract awards for the next program year and the succeeding program year during the review of its business plan conducted under paragraph (E) of this appendix. Such forecast should be included in the participant's business plan. The forecast should include:

(1) The aggregate dollar value of contracts to be sought under the DBE program, reflecting compliance with the business plan;

(2) The aggregate dollar value of contracts to be sought in areas other than traditional areas of DBE participation;

(3) The types of contract opportunities being sought, based on the firm's primary line of business; and

(4) Such other information as may be requested by the recipient to aid in providing effective business development assistance to the participant.

(G) Program participation is divided into two stages; (1) a developmental stage and (2) a transitional stage. The developmental stage is designed to assist participants to overcome their social and economic disadvantage by providing such assistance as may be necessary and appropriate to enable them to access relevant markets and strengthen their financial and managerial skills. The transitional stage of program participation follows the developmental stage and is designed to assist participants to overcome, insofar as practical, their social and economic disadvantage and to prepare the participant for leaving the program.

(H) The length of service in the program term should not be a pre-set time frame for either the developmental or transitional stages but should be figured on the number of years considered necessary in normal progression of achieving the firm's established goals and objectives. The setting of such time could be factored on such items as, but not limited to, the number of contracts, aggregate amount of the contract received, years in business, growth potential, etc.

(I) Beginning in the first year of the transitional stage of program participation, each participant should annually submit for inclusion in its business plan a transition management plan outlining specific steps to promote profitable business operations in areas other than traditional areas of DBE participation after graduation from the program. The transition management plan should be submitted to the recipient at the same time other modifications are submitted pursuant to the annual review under paragraph (E) of this section. The plan should set forth the same information as required under paragraph (F) of steps the participant will take to continue its business development after the expiration of its program term.

(J) When a participant is recognized as successfully completing the program by substantially achieving the targets, objectives and goals set forth in its program term, and has demonstrated the ability to compete in the marketplace, its further participation within the program may be determined by the recipient.

(K) In determining whether a concern has substantially achieved the goals and objectives of its business plan, the following factors, among others, should be considered by the recipient:

(1) Profitability;

(2) Sales, including improved ratio of non-traditional contracts to traditional-type contracts;

(3) Net worth, financial ratios, working capital, capitalization, access to credit and capital;

(4) Ability to obtain bonding;

(5) A positive comparison of the DBE's business and financial profile with profiles of non-DBE businesses in the same area or similar business category; and

(6) Good management capacity and capability.

(L) Upon determination by the recipient that the participant should be graduated from the developmental program, the recipient should notify the participant in writing of its intent to graduate the firm in a letter of notification. The letter of notification should set forth findings, based on the facts, for every material issue relating to the basis of the program graduation with specific reasons for each finding. The letter of notification should also provide the participant 45 days from the date of service of the letter to submit in writing information that would explain why the proposed basis of graduation is not warranted.

(M) Participation of a DBE firm in the program may be discontinued by the recipient prior to expiration of the firm's program term for good cause due to the failure of the firm to engage in business practices that will promote its competitiveness within a reasonable period of time as evidenced by, among other indicators, a pattern of inadequate performance or unjustified delinquent performance. Also, the recipient can discontinue the participation of a firm that does not actively pursue and bid on contracts, and a firm that, without justification, regularly fails to respond to solicitations in the type of work it is qualified for and in the geographical areas where it has indicated availability under its approved business plan. The recipient should take such action if over a 2-year period a DBE firm exhibits such a pattern.

APPENDIX D TO PART 26—MENTOR-PROTÉGÉ PROGRAM GUIDELINES

(A) The purpose of this program element is to further the development of DBEs, including but not limited to assisting them to move into non-traditional areas of work and/or compete in the marketplace outside the DBE program, via the provision of training and assistance from other firms. To operate a mentor-protégé program, a recipient must obtain the approval of the concerned operating administration.

(B)(1) Any mentor-protégé relationship shall be based on a written development plan, approved by the recipient, which clearly sets forth the objectives of the parties and their respective roles, the duration of the arrangement and the services and resources to be provided by the mentor to the protégé. The formal mentor-protégé agreement may set a fee schedule to cover the direct and indirect cost for such services rendered by the mentor for specific training and assistance to the protégé through the life of the agreement. Services provided by the mentor may be reimbursable under the FTA, FHWA, and FAA programs.

(2) To be eligible for reimbursement, the mentor's services provided and associated costs must be directly attributable and properly allowable to specific individual contracts. The recipient may establish a line item for the mentor to quote the portion of the fee schedule expected to be provided during the life of the contract. The amount claimed shall be verified by the recipient and paid on an incremental basis representing the time the protégé is working on the contract. The total individual contract figures accumulated over the life of the agreement shall not exceed the amount stipulated in the original mentor/protégé agreement.

(C) DBEs involved in a mentor-protégé agreement must be independent business entities which meet the requirements for certification as defined in subpart D of this part. A protégé firm must be certified *before* it begins participation in a mentor-protégé arrangement. If the recipient chooses to recognize mentor/protégé agreements, it should establish formal general program guidelines. These guidelines must be submitted to the operating administration for approval prior to the recipient executing an individual contractor/ subcontractor mentor-protégé agreement.

APPENDIX E TO PART 26—INDIVIDUAL DETERMINATIONS OF SOCIAL AND ECONOMIC DISADVANTAGE

The following guidance is adapted, with minor modifications, from SBA regulations concerning social and economic disadvantage determinations (see 13 CFR 124.103(c) and 124.104).

SOCIAL DISADVANTAGE

I. Socially disadvantaged individuals are those who have been subjected to racial or ethnic prejudice or cultural bias within American society because of their identities as members of groups and without regard to their individual qualities. Social disadvantage must stem from circumstances beyond their control. Evidence of individual social disadvantage must include the following elements:

(A) At least one objective distinguishing feature that has contributed to social disadvantage, such as race, ethnic origin, gender, disability, long-term residence in an environment isolated from the mainstream of American society, or other similar causes not common to individuals who are not socially disadvantaged;

(B) Personal experiences of substantial and chronic social disadvantage in American society, not in other countries; and

(C) Negative impact on entry into or advancement in the business world because of the disadvantage. Recipients will consider any relevant evidence in assessing this element. In every case, however, recipients will consider education, employment and business history, where applicable, to see if the totality of circumstances shows disadvantage in entering into or advancing in the business world.

(1) *Education.* Recipients will consider such factors as denial of equal access to institutions of higher education and vocational training, exclusion from social and professional association with students or teachers, denial of educational honors rightfully earned, and social patterns or pressures which discouraged the individual from pursuing a professional or business education.

(2) *Employment.* Recipients will consider such factors as unequal treatment in hiring, promotions and other aspects of professional advancement, pay and fringe benefits, and other terms and conditions of employment; retaliatory or discriminatory behavior by an employer or labor union; and social patterns or pressures which have channeled the individual into non-professional or non-business fields.

(3) *Business history.* The recipient will consider such factors as unequal access to credit or capital, acquisition of credit or capital under commercially unfavorable circumstances, unequal treatment in opportunities for government contracts or other work, unequal treatment by potential customers and business associates, and exclusion from business or professional organizations.

II. With respect to paragraph I.(A) of this appendix, the Department notes that people with disabilities have disproportionately low incomes and high rates of unemployment. Many physical and attitudinal barriers remain to their full participation in education, employment, and business opportunities available to the general public. The Americans with Disabilities Act (ADA) was passed in recognition of the discrimination faced by people with disabilities. It is plausible that many individuals with disabilities—especially persons with severe disabilities (e.g., significant mobility, vision, or hearing impairments)—may be socially and economically disadvantaged.

III. Under the laws concerning social and economic disadvantage, people with disabilities are not a group presumed to be disadvantaged. Nevertheless, recipients should look carefully at individual showings of disadvantage by individuals with disabilities, making a case-by-case judgment about whether such an individual meets the criteria of this appendix. As public entities subject to Title II of the ADA, recipients must also ensure their DBE programs are accessible to individuals with disabilities. For example, physical barriers or the lack of application and information materials in accessible formats cannot be permitted to thwart the access of potential applicants to the certification process or other services made available to DBEs and applicants.

ECONOMIC DISADVANTAGE

(A) *General.* Economically disadvantaged individuals are socially disadvantaged individuals whose ability to compete in the free enterprise system has been impaired due to diminished capital and credit opportunities as compared to others in the same or similar line of business who are not socially disadvantaged.

(B) *Submission of narrative and financial information.*

(1) Each individual claiming economic disadvantage must describe the conditions which are the basis for the claim in a narrative statement, and must submit personal financial information.

(2) [Reserved]

(C) *Factors to be considered.* In considering diminished capital and credit opportunities, recipients will examine factors relating to the personal financial condition of any individual claiming disadvantaged status, including personal income for the past two years (including bonuses and the value of company stock given in lieu of cash), personal net worth, and the fair market value of all assets, whether encumbered or not. Recipients will also consider the financial condition of the applicant compared to the financial profiles of small businesses in the same primary industry classification, or, if not available, in similar lines of business, which are not owned and controlled by socially and economically disadvantaged individuals in evaluating the individual's access to credit and capital. The financial profiles that recipients will compare include total assets, net sales, pre-tax profit, sales/working capital ratio, and net worth.

(D) *Transfers within two years.*

(1) Except as set forth in paragraph (D)(2) of this appendix, recipients will attribute to an individual claiming disadvantaged status any assets which that individual has transferred to an immediate family member, or to

a trust, a beneficiary of which is an immediate family member, for less than fair market value, within two years prior to a concern's application for participation in the DBE program, unless the individual claiming disadvantaged status can demonstrate that the transfer is to or on behalf of an immediate family member for that individual's education, medical expenses, or some other form of essential support.

(2) Recipients will not attribute to an individual claiming disadvantaged status any assets transferred by that individual to an immediate family member that are consistent with the customary recognition of special occasions, such as birthdays, graduations, anniversaries, and retirements.

(3) In determining an individual's access to capital and credit, recipients may consider any assets that the individual transferred within such two-year period described by paragraph (D)(1) of this appendix that are not considered in evaluating the individual's assets and net worth (e.g., transfers to charities).

[64 FR 5126, Feb. 2, 1999, as amended at 68 FR 35559, June 16, 2003]

APPENDIX F TO PART 26—UNIFORM CERTIFICATION APPLICATION FORM

INSTRUCTIONS FOR COMPLETING THE DISADVANTAGED BUSINESS ENTERPRISE (DBE) PROGRAM UNIFORM CERTIFICATION APPLICATION

NOTE: If you require additional space for any question in this application, please attach additional sheets or copies as needed, taking care to indicate on each attached sheet/copy the section and number of this application to which it refers.

Section 1: CERTIFICATION INFORMATION

A. Prior/Other Certifications

Check the appropriate box indicating for which program your firm is currently certified. If you are already certified as a DBE, indicate in the appropriate box the name of the certifying agency that has previously certified your firm, and also indicate whether your firm has undergone an onsite visit. If your firm has already undergone an onsite visit/review, indicate the most recent date of that review and the state UCP that conducted the review.

NOTE: If your firm is currently certified under the SBA's 8(a) and/or SDB programs, you may not have to complete this application. You should contact your state UCP to find out about a streamlined application process for firms that are already certified under the 8(a) and SDB programs.

B. Prior/Other Applications and Privileges

Indicate whether your firm or any of the persons listed has ever withdrawn an application for a DBE program or an SBA 8(a) or SDB program, or whether any have ever been denied certification, decertified, debarred, suspended, or had bidding privileges denied or restricted by any state or local agency or Federal entity. If your answer is yes, indicate the date of such action, identify the name of the agency, and explain fully the nature of the action in the space provided.

Section 2: GENERAL INFORMATION

A. Contact Information

(1) State the name and title of the person who will serve as your firm's primary contact under this application.
(2) State the legal name of your firm, as indicated in your firm's Articles of Incorporation or charter.
(3) State the primary phone number of your firm.
(4) State a secondary phone number, if any.
(5) State your firm's fax number, if any.
(6) State your firm's or your contact person's email address.
(7) State your firm's website address, if any.
(8) State the street address of your firm (i.e., the physical location of its offices – not a post office box address).
(9) State the mailing address of your firm, if it is different from your firm's street address.

B. Business Profile

(1) In the box provided, briefly describe the primary business and professional activities in which your firm engages.
(2) State the Federal Tax ID number of your firm as provided on your firm's filed tax returns, if you have one. This could also be the Social Security number of the owner of your firm.
(3) State the date on which your firm was officially established, as stated in your firm's Articles of Incorporation or charter.
(4) State the date on which you and/or each other owner took ownership of the firm.
(5) Check the appropriate box that describes the manner in which you and each other owner acquired ownership of your firm. If you checked "Other," explain in the space provided.
(6) Check the appropriate box that indicates whether your firm is "for profit."

NOTE: If you checked "No," then you do NOT qualify for the DBE program and therefore do not need to complete the rest of this application. The DBE program requires all participating firms be for-profit enterprises.

(7) Check the appropriate box that describes the legal form of ownership of your firm, as indicated in your firm's Articles of Incorporation or charter. If you checked "Other," briefly explain in the space provided.
(8) Check the appropriate box that indicates whether your firm has ever existed under different ownership, a different type of ownership, or a different name. If you checked "Yes," specify which and briefly explain the circumstances in the space provided.
(9) Indicate in the spaces provided how many employees your firm has, specifying the number of employees who work on a full-time and part-time basis.
(10) Specify the total gross receipts of your firm for each of the past three years, as declared in your firm's filed tax returns.

C. Relationships with Other Businesses

(1) Check the appropriate box that indicates whether your firm is co-located at any of its business locations, or whether your firm shares a telephone number(s), a post office box, any office space, a yard, warehouse, other facilities, any equipment, or any office staff with any other business, organization, or entity of any kind. If you answered "Yes," then specify the name of the other firm(s) and briefly explain the nature of the shared facilities or other items in the space provided.
(2) Check the appropriate box that indicates whether at present, or at any time in the past:
  (a) Your firm has been a subsidiary of any other firm;
  (b) Your firm consisted of a partnership in which one or more of the partners are other firms;
  (c) Your firm has owned any percentage of any other firm; and
  (d) Your firm has had any subsidiaries of its own.
(3) Check the appropriate box that indicates whether any other firm has ever had an ownership interest in your firm.

(4) If you answered "Yes" to any of the questions in (2)(a)-(d) or (3), identify the name, address and type of business for each.

D. Immediate Family Member Businesses

Check the appropriate box that indicates whether any of your immediate family members own or manage another company. An "immediate family member" is any person who is your father, mother, husband, wife, son, daughter, brother, sister, grandmother, grandfather, grandson, granddaughter, mother-in-law, or father-in-law. If you answered "Yes," provide the name of each relative, your relationship to them, the name of the company they own or manage, the type of business, and whether they own or manage the company.

Section 3: OWNERSHIP

Identify all individuals or holding companies with any ownership interest in your firm, providing the information requested below (if your firm has more than one owner, provide completed copies of this section for each additional owner):

A. Background Information

(1) Give the name of the owner.
(2) State his/her title or position within your firm.
(3) Give his/her home phone number.
(4) State his/her home (street) address.
(5) Check the appropriate box that indicates this owner's gender.
(6) Check the appropriate box that indicates this owner's ethnicity (check all that apply). If you checked "Other," specify this owner's ethnic group/identity not otherwise listed.
(7) Check the appropriate box to indicate whether this owner is a U.S. citizen.
(8) If this owner is not a U.S. citizen, check the appropriate box that indicates whether this owner is a lawfully admitted permanent resident. If this owner is neither a U.S. citizen nor a lawfully admitted permanent resident of the U.S., then this owner is NOT eligible for certification as a DBE owner. This, however, does not necessarily disqualify your firm altogether from the DBE program if another owner is a U.S. citizen or lawfully admitted permanent resident and meets the program's other qualifying requirements.

B. Ownership Interest

(1) State the number of years during which this owner has been an owner of your firm.
(2) Indicate the dollar value of this owner's initial investment to acquire an ownership interest in your firm, broken down by cash, real estate, equipment, and/or other investment.
(3) State the percentage of total ownership control of your firm that this owner possesses.
(4) State the familial relationship of this owner to each other owner of your firm.
(5) Indicate the number, percentage of the total, class, date acquired, and method by which this owner acquired his/her shares of stock in your firm.
(6) Check the appropriate box that indicates whether this owner performs a management or supervisory function for any other business. If you checked "Yes," state the name of the other business and this owner's function or title held in that business.
(7) Check the appropriate box that indicates whether this owner owns or works for any other firm(s) that has any relationship with your firm. If you checked "Yes," identify the name of the other business and this owner's function or title held in that business. Briefly describe the nature of the business relationship in the space provided.

C. Disadvantaged Status

NOTE: You only need to complete this section for each owner that is applying for DBE qualification (i.e., for each owner who is claiming to be "socially and economically disadvantaged" and whose ownership interest is to be counted toward the control and 51% ownership requirements of the DBE program)

(1) Indicate in the space provided the total Personal Net Worth (PNW) of each owner who is applying for DBE qualification. Use the PNW calculator form at the end of this application to compute each owner's PNW.
(2) Check the appropriate box that indicates whether any trust has ever been created for the benefit of this disadvantaged owner. If you answered "Yes," briefly explain the nature, history, purpose, and current value of the trust(s).

Section 4: CONTROL

A. Identify your firm's Officers and Board of Directors:

(1) In the space provided, state the name, title, date of appointment, ethnicity, and gender of each officer of your firm.
(2) In the space provided, state the name, title, date of appointment, ethnicity, and gender of each individual serving on your firm's Board of Directors.
(3) Check the appropriate box that indicates whether any of your firm's officers and/or directors listed above perform a management or supervisory function for any other business. If you answered "Yes," identify each person by name, his/her title, the name of the other business in which s/he is involved, and his/her function performed in that other business.
(4) Check the appropriate box that indicates whether any of your firm's officers and/or directors listed above own or work for any other firm(s) that has a relationship with your firm. If you answered "Yes," identify the name of the firm, the officer or director, and the nature of his/her business relationship with that other firm.

B. Identify your firm's management personnel (by name, title, ethnicity, and gender) who control your firm in the following areas:

(1) Making financial decisions on your firm's behalf, including the acquisition of lines of credit, surety bonds, supplies, etc.;
(2) Estimating and bidding, including calculation of cost estimates, bid preparation and submission;
(3) Negotiating and contract execution, including participation in any of your firm's negotiations and executing contracts on your firm's behalf;
(4) Hiring and/or firing of management personnel, including interviewing and conducting performance evaluations;
(5) Field/Production operations supervision, including site supervision, scheduling, project management services, etc.;
(6) Office management;
(7) Marketing and sales;
(8) Purchasing of major equipment;
(9) Signing company checks (for any purpose); and
(10) Conducting any other financial transactions on your firm's behalf not otherwise listed.
(11) Check the appropriate box that indicates whether any of the persons listed in (1) through (10) above perform a management or supervisory function for any other business. If you answered "Yes," identify each person by name, his/her title, the name of the other business in which s/he is involved, and his/her function performed in that other business.
(12) Check the appropriate box that indicates whether any of the persons listed in (1) through (10) above own or work for any other firm(s) that has a relationship with your firm. If you answered "Yes," identify the name of the firm, the name of the person, and the nature of his/her business relationship with that other firm.

C. Indicate your firm's inventory in the following categories:

(1) Equipment
State the type, make and model, and current dollar value of each piece of equipment held and/or used by your firm. Indicate whether each piece is either owned or leased by your firm.

(2) Vehicles
State the type, make and model, and current dollar value of each motor vehicle held and/or used by your firm. Indicate whether each vehicle is either owned or leased by your firm.

(3) Office Space
State the street address of each office space held and/or used by your firm. Indicate whether your firm owns or leases the office space and the current dollar value of that property or its lease.

(4) Storage Space
State the street address of each storage space held and/or used by your firm. Indicate whether your firm owns or leases the storage space and the current dollar value of that property or its lease.

D. Does your firm rely on any other firm for management functions or employee payroll?
Check the appropriate box that indicates whether your firm relies on any other firm for management functions or for employee payroll. If you answered "Yes," briefly explain the nature of that reliance and the extent to which the other firm carries out such functions.

E. Financial Information
(1) Banking Information
(a) State the name of your firm's bank.
(b) State the main phone number of your firm's bank branch.
(c) State the address of your firm's bank branch.
(2) Bonding Information
(a) State your firm's Binder Number.
(b) State the name of your firm's bond agent and/or broker.
(c) State your agent's/broker's phone number.
(d) State your agent's/broker's address.
(e) State your firm's bonding limits (in dollars), specifying both the Aggregate and Project Limits.

F. Identify all sources, amounts, and purposes of money loaned to your firm, including the names of persons or firms securing the loan, if other than the listed owner:
State the name and address of each source, the name of the person securing the loan, the original dollar amount and the current balance of each loan, and the purpose for which each loan was made to your firm.

G. List all contributions or transfers of assets to/from your firm and to/from any of its owners over the past two years:
Indicate in the spaces provided, the type of contribution or asset that was transferred, its current dollar value, the person or firm from whom it was transferred, the person or firm to whom it was transferred, the relationship between the two persons and/or firms, and the date of the transfer.

H. List current licenses/permits held by any owner or employee of your firm.
List the name of each person in your firm who holds a professional license or permit, the type of license or permit, the expiration date of the permit or license, and the license/permit number and issuing State of the license or permit.

I. List the three largest contracts completed by your firm in the past three years, if any.
List the name of each owner or contractor for each contract, the name and location of the projects under each contract, the type of work performed on each contract, and the dollar value of each contract.

J. List the three largest active jobs on which your firm is currently working.
For each active job listed, state the name of the prime contractor and the project number, the location, the type of work performed, the project start date, the anticipated completion date, and the dollar value of the contract.

AFFIDAVIT & SIGNATURE
Carefully read the attached affidavit in its entirety. Fill in the required information for each blank space, and sign and date the affidavit in the presence of a Notary Public, who must then notarize the form.

DISADVANTAGED BUSINESS ENTERPRISE PROGRAM
49 C.F.R. PART 26

UNIFORM CERTIFICATION APPLICATION

ROADMAP FOR APPLICANTS

① **Should I apply?**

- Is your firm at least 51%-owned by a socially and economically disadvantaged individual(s) who also controls the firm?
- Is the disadvantaged owner a U.S. citizen or lawfully admitted permanent resident of the U.S.?
- Is your firm a small business that meets the Small Business Administration's (SBA's) size standard and does not exceed $17.42 million in gross annual receipts?
- Is your firm organized as a for-profit business?

⇒ If you answered "Yes" to all of the questions above, you may be eligible to participate in the U.S. DOT DBE program.

② **Is there an easier way to apply?**

If you are currently certified by the SBA as an 8(a) and/or SDB firm, you may be eligible for a streamlined certification application process. Under this process, the certifying agency to which you are applying will accept your current SBA application package in lieu of requiring you to fill out and submit this form.
NOTE: You must still meet the requirements for the DBE program, including undergoing an on-site review.

③ **Be sure to attach all of the required documents listed in the Documents Check List at the end of this form with your completed application.**

④ **Where can I find more information?**

- U.S. DOT – http://osdbuweb.dot.gov/business/dbe/index.html (this site provides useful links to the rules and regulations governing the DBE program, questions and answers, and other pertinent information)
- SBA – http://www.ntis.gov/naics (provides a listing of NAICS codes) and http://www.sba.gov/size/indextableofsize.html (provides a listing of NAICS codes)
- 49 CFR Part 26 (the rules and regulations governing the DBE program)

Under Sec. 26.107 of 49 CFR Part 26, dated February 2, 1999, if at any time, the Department or a recipient has reason to believe that any person or firm has willfully and knowingly provided incorrect information or made false statements, the Department may initiate suspension or debarment proceedings against the person or firm under 49 CFR Part 29, Governmentwide Debarment and Suspension (nonprocurement) and Governmentwide Requirements for Drug-free Workplace (grants), take enforcement action under 49 CFR Part 31, Program Fraud and Civil Remedies, and/or refer the matter to the Department of Justice for criminal prosecution under 18 U.S.C. 1001, which prohibits false statements in Federal programs.

Section 1: CERTIFICATION INFORMATION

A. Prior/Other Certifications

Is your firm currently certified for any of the following programs? *(If Yes, check appropriate box(es))*	❑ DBE	Name of certifying agency: Has your firm's state UCP conducted an on-site visit? ❑ Yes, on ___/___/___ State: _____ ❑ No
	❑ 8(a) ❑ SDB	⊗ **STOP!** If you checked either the 8(a) or SDB box, you may not have to complete this application. Ask your state UCP about the streamlined application process under the SBA-DOT MOU.

B. Prior/Other Applications and Privileges

Has your firm (under any name) or any of its owners, Board of Directors, officers or management personnel, ever withdrawn an application for any of the programs listed above, or ever been denied certification, decertified, or debarred or suspended or otherwise had bidding privileges denied or restricted by any state or local agency, or Federal entity?

❑ Yes, on ___/___/___ ❑ No

If Yes, identify State and name of state, local, or Federal agency and explain the nature of the action:

Section 2: GENERAL INFORMATION

A. Contact Information

(1) Contact person and Title:		(2) Legal name of firm:		
(3) Phone #:	(4) Other Phone #:		(5) Fax #:	
(6) E-mail:	(7) Website (*if have one*):			
(8) Street address of firm *(No P.O. Box)*:	City:	County/Parish:	State:	Zip:
(9) Mailing address of firm (*if different*):	City:	County/Parish:	State:	Zip:

B. Business Profile

(1) Describe the primary activities of your firm:	(2) Federal Tax ID *(if any)*:
(3) This firm was established on ___/___/___	(4) I/We have owned this firm since: ___/___/___
(5) Method of acquisition *(check all that apply)*: ❑ Started new business ❑ Bought existing business ❑Inherited business ❑ Secured concession ❑ Merger or consolidation ❑ Other *(explain)*	
(6) Is your firm "for profit"? ❑ Yes ❑ No	⊗ **STOP!** If your firm is NOT for-profit, then you do NOT qualify for this program and do NOT need to fill out this application.

(7) Type of firm *(check all that apply)*:
- ❑ Sole Proprietorship
- ❑ Partnership
- ❑ Corporation
- ❑ Limited Liability Partnership
- ❑ Limited Liability Corporation
- ❑ Joint Venture
- ❑ Other, Describe: _____

(8) Has your firm ever existed under different ownership, a different type of ownership, or a different name?
❑ Yes ❑ No
If Yes, explain:

(9) Number of employees: Full-time _____ Part-time _____ Total _____

(10) Specify the gross receipts of the firm for the last 3 years: Year _____ Total receipts $ _____
Year _____ Total receipts $ _____
Year _____ Total receipts $ _____

C. Relationships with Other Businesses

(1) Is your firm co-located at any of its business locations, or does it share a telephone number, P.O. Box, office space, yard, warehouse, facilities, equipment, or office staff, with any other business, organization, or entity?
❑ Yes ❑ No

If Yes, identify: Other Firm's name: _____
Explain nature of shared facilities:

(2) At present, or at any time in the past, has your firm:	(a) been a subsidiary of any other firm?	❑ Yes ❑ No
	(b) consisted of a partnership in which one or more of the partners are other firms?	❑ Yes ❑ No
	(c) owned any percentage of any other firm?	❑ Yes ❑ No
	(d) had any subsidiaries?	❑ Yes ❑ No
(3) Has any other firm had an ownership interest in your firm at present or at any time in the past?		❑ Yes ❑ No

(4) If you answered "Yes" to any of the questions in (2)(a)-(d) and/or (3), identify the following for each *(attach extra sheets, if needed)*:

	Name	Address	Type of Business
1.			
2.			
3.			

D. Immediate Family Member Businesses

Do any of your immediate family members own or manage another company? ❑ Yes ❑ No
If Yes, then list *(attach extra sheets, if needed)*:

	Name	Relationship	Company	Type of Business	Own or Manage?
1.					
2.					

Section 3: OWNERSHIP

Identify all individuals or holding companies with any ownership interest in your firm, providing the information requested below *(If more than one owner, attach separate sheets for each additional owner)*:

A. Background Information

(1) Name:	(2) Title:	(3) Home Phone #:
(4) Home Address (*street and number*):	City:	State: Zip:

(5) Gender: ❑ Male ❑ Female	(6) Ethnic group membership *(Check all that apply)*: ❑ Black ❑ Hispanic ❑ Native American ❑ Asian Pacific ❑ Subcontinent Asian ❑ Other (*specify*) _____
(7) U.S. Citizen: ❑ Yes ❑ No	
(8) Lawfully Admitted Permanent Resident: ❑ Yes ❑ No	

B. Ownership Interest

(1) Number of years as owner:	(2) Initial investment to acquire ownership interest in firm:	Type	Dollar Value
(3) Percentage owned:		Cash	$
(4) Familial relationship to other owners:		Real Estate	$
		Equipment	$
		Other	$

(5) Shares of Stock: Number Percentage Class Date acquired Method Acquired

(6) Does this owner perform a management or supervisory function for any other business? ❑ Yes ❑ No
If Yes, identify: Name of Business: _____ Function/Title: _____

(7) Does this owner own or work for any other firm(s) that has a relationship with this firm (*e.g., ownership interest, shared office space, financial investments, equipment, leases, personnel sharing, etc.*)? ❑ Yes ❑ No

If Yes, identify: Name of Business: _____ Function/Title: _____
Nature of Business Relationship:

C. Disadvantaged Status – NOTE: Complete this section only for each owner applying for DBE qualification (i.e., for each owner claiming to be socially and economically disadvantaged)

(1) What is the Personal Net Worth (PNW) of the owner(s) applying for DBE qualification? *(Use and attach the Personal Net Worth calculator form at the end of this application; attach additional sheets if more than one owner is applying)*

(2) Has any trust been created for the benefit of this disadvantaged owner(s)? ❑ Yes ❑ No
If Yes, explain (*attach additional sheets if needed*):

Section 4: CONTROL

A. Identify your firm's Officers & Board of Directors *(If additional space is required, attach a separate sheet)*:

	Name	Title	Date Appointed	Ethnicity	Gender
(1) Officers of the Company	(a)				
	(b)				
	(c)				
	(d)				
	(e)				
(2) Board of Directors	(a)				
	(b)				
	(c)				
	(d)				
	(e)				

(3) Do any of the persons listed in (1) and/or (2) above perform a management or supervisory function for any other business? ❑ Yes ❑ No
If Yes, identify for each: Person: _____ Title: _____
Business: _____ Function: _____

(4) Do any of the persons listed (1) and/or (2) above own or work for any other firm(s) that has a relationship with this firm *(e.g., ownership interest, shared office space, financial investments, equipment, leases, personnel sharing, etc.)*? ❑ Yes ❑ No

If Yes, identify for each: Firm Name: _____ Person: _____
Nature of Business Relationship:

B. Identify your firm's management personnel who control your firm in the following areas *(If more than two persons, attach a separate sheet)*:

	Name	Title	Ethnicity	Gender
(1) Financial Decisions *(responsibility for acquisition of lines of credit, surety bonding, supplies, etc.)*	a.			
	b.			
(2) Estimating and bidding	a.			
	b.			
(3) Negotiating and Contract Execution	a.			
	b.			
(4) Hiring/firing of management personnel	a.			
	b.			
(5) Field/Production Operations Supervisor	a.			
	b.			
(6) Office management	a.			
	b.			
(7) Marketing/Sales	a.			
	b.			
(8) Purchasing of major equipment	a.			
	b.			
(9) Authorized to Sign Company Checks (for any purpose)	a.			
	b.			
(10) Authorized to make Financial Transactions	a.			
	b.			

(11) Do any of the persons listed in (1) through (10) above perform a management or supervisory function for any other business? ❑ Yes ❑ No
If Yes, identify for each: Person: _____ Title: _____
Business: _____ Function: _____

(12) Do any of the persons listed in (1) through (10) above own or work for any other firm(s) that has a relationship with this firm (*e.g., ownership interest, shared office space, financial investments, equipment, leases, personnel sharing, etc.*)?
❑ Yes ❑ No

If Yes, identify for each: Firm Name: _____ Person: _____
Nature of Business Relationship:

C. Indicate your firm's inventory in the following categories (*attach additional sheets if needed*):

(1) Equipment

Type of Equipment	Make/Model	Current Value	Owned or Leased?
(a)			
(b)			
(c)			

(2) Vehicles

Type of Vehicle	Make/Model	Current Value	Owned or Leased?
(a)			
(b)			
(c)			

(3) Office Space

Street Address	Owned or Leased?	Current Value of Property or Lease
(a)		
(b)		

(4) Storage Space

Street Address	Owned or Leased?	Current Value of Property or Lease
(a)		
(b)		

D. Does your firm rely on any other firm for management functions or employee payroll? ❑ Yes ❑ No

If Yes, explain:

E. Financial Information

(1) **Banking Information**:
(a) Name of bank: _____ (b) Phone No: ( ) _____
(c) Address of bank: _____ City: _____ State: _____ Zip: _____

(2) **Bonding Information**: If you have bonding capacity, identify: (a) Binder No: _____
(b) Name of agent/broker _____ (c) Phone No: ( ) _____
(d) Address of agent/broker: _____ City: _____ State: _____ Zip: _____
(e) Bonding limit: Aggregate limit $_____ Project limit $_____

F. Identify all sources, amounts, and purposes of money loaned to your firm, including the names of any persons or firms securing the loan, if other than the listed owner:

Name of Source	Address of Source	Name of Person Securing the Loan	Original Amount	Current Balance	Purpose of Loan
1.					
2.					
3.					

G. List all contributions or transfers of assets to/from your firm and to/from any of its owners over the past two years (*attach additional sheets if needed*)**:**

Contribution/Asset	Dollar Value	From Whom Transferred	To Whom Transferred	Relationship	Date of Transfer
1.					
2.					
3.					

H. List current licenses/permits held by any owner and/or employee of your firm (*e.g., contractor, engineer, architect, etc.)(attach additional sheets if needed*)**:**

Name of License/Permit Holder	Type of License/Permit	Expiration Date	License Number and State
1.			
2.			
3.			

I. List the three largest contracts completed by your firm in the past three years, if any:

Name of Owner/Contractor	Name/Location of Project	Type of Work Performed	Dollar Value of Contract
1.			
2.			
3.			

J. List the three largest active jobs on which your firm is currently working:

Name of Prime Contractor and Project Number	Location of Project	Type of Work	Project Start Date	Anticipated Completion Date	Dollar Value of Contract
1.					
2.					
3.					

DBE UNIFORM CERTIFICATION APPLICATION SUPPORTING DOCUMENTS CHECKLIST

In order to complete your application for DBE certification, you must attach copies of all of the following documents as they apply to you and your firm.

All Applicants

- ❑ Work experience resumes (include places of ownership/employment with corresponding dates), for all owners and officers of your firm
- ❑ Personal Financial Statement (form available with this application)
- ❑ Personal tax returns for the past three years, if applicable, for each owner claiming disadvantaged status
- ❑ Your firm's tax returns (gross receipts) and all related schedules for the past three years
- ❑ Documented proof of contributions used to acquire ownership for each owner (*e.g., both sides of cancelled checks*)
- ❑ Your firm's signed loan agreements, security agreements, and bonding forms
- ❑ Descriptions of all real estate (including office/storage space, etc.) owned/leased by your firm and documented proof of ownership/signed leases
- ❑ List of equipment leased and signed lease agreements
- ❑ List of construction equipment and/or vehicles owned and titles/proof of ownership
- ❑ Documented proof of any transfers of assets to/from your firm and/or to/from any of its owners over the past two years
- ❑ Year-end balance sheets and income statements for the past three years (*or life of firm, if less than three years*); a new business must provide a current balance sheet
- ❑ All relevant licenses, license renewal forms, permits, and haul authority forms
- ❑ DBE and SBA 8(a) or SDB certifications, denials, and/or decertifications, if applicable
- ❑ Bank authorization and signatory cards
- ❑ Schedule of salaries (or other compensation or remuneration) paid to all officers, managers, owners, and/or directors of the firm
- ❑ Trust agreements held by any owner claiming disadvantaged status, if any

Partnership or Joint Venture

- ❑ Original and any amended Partnership or Joint Venture Agreements

Corporation or LLC

- ❑ Official Articles of Incorporation (*signed by the state official*)
- ❑ Both sides of all corporate stock certificates and your firm's stock transfer ledger
- ❑ Shareholders' Agreement
- ❑ Minutes of all stockholders and board of directors meetings
- ❑ Corporate by-laws and any amendments
- ❑ Corporate bank resolution and bank signature cards
- ❑ Official Certificate of Formation and Operating Agreement with any amendments (for LLCs)

Trucking Company

- ❑ Documented proof of ownership of the company
- ❑ Insurance agreements for each truck owned or operated by your firm
- ❑ Title(s) and registration certificate(s) for each truck owned or operated by your firm
- ❑ List of U.S. DOT numbers for each truck owned or operated by your firm

Regular Dealer

- ❑ Proof of warehouse ownership or lease
- ❑ List of product lines carried
- ❑ List of distribution equipment owned and/or leased

NOTE: The specific state UCP to which you are applying may have additional required documents that you must also supply with your application. Contact the appropriate certifying agency to which you are applying to find out if more is required.

AFFIDAVIT OF CERTIFICATION

This form must be signed and notarized for each owner upon which disadvantaged status is relied.

A MATERIAL OR FALSE STATEMENT OR OMISSION MADE IN CONNECTION WITH THIS APPLICATION IS SUFFICIENT CAUSE FOR DENIAL OF CERTIFICATION, REVOCATION OF A PRIOR APPROVAL, INITIATION OF SUSPENSION OR DEBARMENT PROCEEDINGS, AND MAY SUBJECT THE PERSON AND/OR ENTITY MAKING THE FALSE STATEMENT TO ANY AND ALL CIVIL AND CRIMINAL PENALTIES AVAILABLE PURSUANT TO APPLICABLE FEDERAL AND STATE LAW.

I _____ (full name printed), swear or affirm under penalty of law that I am _____ (title) of applicant firm _____ (firm name) and that I have read and understood all of the questions in this application and that all of the foregoing information and statements submitted in this application and its attachments and supporting documents are true and correct to the best of my knowledge, and that all responses to the questions are full and complete, omitting no material information. The responses include all material information necessary to fully and accurately identify and explain the operations, capabilities and pertinent history of the named firm as well as the ownership, control, and affiliations thereof.

I recognize that the information submitted in this application is for the purpose of inducing certification approval by a government agency. I understand that a government agency may, by means it deems appropriate, determine the accuracy and truth of the statements in the application, and I authorize such agency to contact any entity named in the application, and the named firm's bonding companies, banking institutions, credit agencies, contractors, clients, and other certifying agencies for the purpose of verifying the information supplied and determining the named firm's eligibility.

I agree to submit to government audit, examination and review of books, records, documents and files, in whatever form they exist, of the named firm and its affiliates, inspection of its place(s) of business and equipment, and to permit interviews of its principals, agents, and employees. I understand that refusal to permit such inquiries shall be grounds for denial of certification.

If awarded a contract or subcontract, I agree to promptly and directly provide the prime contractor, if any, and the Department, recipient agency, or federal funding agency on an ongoing basis, current, complete and accurate information regarding (1) work performed on the project; (2) payments; and (3) proposed changes, if any, to the foregoing arrangements.

I agree to provide written notice to the recipient agency or Unified Certification Program (UCP) of any material change in the information contained in the original application within 30 calendar days of such change (e.g., ownership, address, telephone number, etc.).

I acknowledge and agree that any misrepresentations in this application or in records pertaining to a contract or subcontract will be grounds for terminating any contract or subcontract which may be awarded; denial or revocation of certification; suspension and debarment; and for initiating action under federal and/or state law concerning false statement, fraud or other applicable offenses.

I certify that I am a socially and economically disadvantaged individual who is an owner of the above-referenced firm seeking certification as a Disadvantaged Business Enterprise (DBE). In support of my application, I certify that I am a member of one or more of the following groups, and that I have held myself out as a member of the group(s) (circle all that apply):

Female Black American Hispanic American
Native American Asian- Pacific American
Subcontinent Asian American
Other (specify) _____

I certify that I am socially disadvantaged because I have been subjected to racial or ethnic prejudice or cultural bias, or have suffered the effects of discrimination, because of my identity as a member of one or more of the groups identified above, without regard to my individual qualities.

I further certify that my personal net worth does not exceed $750,000, and that I am economically disadvantaged because my ability to compete in the free enterprise system has been impaired due to diminished capital and credit opportunities as compared to others in the same or similar line of business who are not socially and economically disadvantaged.

I declare under penalty of perjury that the information provided in this application and supporting documents is true and correct.

Executed on _____ (Date)

Signature _____
(DBE Applicant)

NOTARY CERTIFICATE

[68 FR 35559, June 16, 2003]

PART 27—NONDISCRIMINATION ON THE BASIS OF DISABILITY IN PROGRAMS OR ACTIVITIES RECEIVING FEDERAL FINANCIAL ASSISTANCE

Subpart A—General

Sec.
27.1 Purpose.
27.3 Applicability.
27.5 Definitions.
27.7 Discrimination prohibited.
27.9 Assurance required.
27.11 Remedial action, voluntary action, and compliance planning.
27.13 Designation of responsible employee and adoption of grievance procedures.
27.15 Notice.
27.17 Effect of State or local law.
27.19 Compliance with Americans with Disabilities Act requirements and FTA policy.

Subpart B—Accessibility Requirements in Specific Operating Administration Programs: Airports, Railroads, and Highways

27.71 Airport facilities.
27.72 Boarding assistance for aircraft.
27.75 Federal Highway Administration—highways.
27.77 Recipients of Essential Air Service subsidies.

Subpart C—Enforcement

27.121 Compliance information.
27.123 Conduct of investigations.
27.125 Compliance procedure.
27.127 Hearings.
27.129 Decisions and notices.

AUTHORITY: Sec. 504 of the Rehabilitation Act of 1973, as amended (29 U.S.C. 794); sec. 16 (a) and (d) of the Federal Transit Act of 1964, as amended (49 U.S.C. 5310 (a) and (f); sec. 165(b) of the Federal-Aid Highway Act of 1973, as amended (23 U.S.C. 142 nt.).

SOURCE: 44 FR 31468, May 31, 1979, unless otherwise noted.

Subpart A—General

§ 27.1 Purpose.

The purpose of this part is to carry out the intent of section 504 of the Rehabilitation Act of 1973 (29 U.S.C. 794) as amended, to the end that no otherwise qualified individual with a disability in the United States shall, solely by reason of his or her disability, be excluded from the participation in, be denied the benefits of, or be subjected to discrimination under any program or activity receiving Federal financial assistance.

§ 27.3 Applicability.

(a) This part applies to each recipient of Federal financial assistance from the Department of Transportation and to each program or activity that receives such assistance.

(b) Design, construction, or alteration of buildings or other fixed facilities by public entities subject to part 37 of this title shall be in conformance with appendix A to part 37 of this title. All other entities subject to section 504 shall design, construct or alter a building, or other fixed facilities shall be in conformance with either appendix A to part 37 of this title or the Uniform Federal Accessibility Standards, 41 CFR part 101–19 subpart 101–19.6, appendix A.

[44 FR 31468, May 31, 1979, as amended at 56 FR 45621, Sept. 6, 1991; 68 FR 51390, Aug. 26, 2003]

§ 27.5 Definitions.

As used in this part:

Act means the Rehabilitation Act of 1973, Public Law 93–112, as amended.

Applicant means one who submits an application, request, or plan to be approved by a Departmental official or by a primary recipient as a condition to eligibility for Federal financial assistance, and *application* means such an application, request, or plan.

Commercial service airport means an airport that is defined as a commercial service airport for purposes of the Federal Aviation Administration's Airport Improvement Program and that enplanes annually 2500 or more passengers and receives scheduled passenger service of aircraft.

Department means the Department of Transportation.

Discrimination means denying handicapped persons the opportunity to participate in or benefit from any program or activity receiving Federal financial assistance.

Facility means all or any portion of buildings, structures, vehicles, equipment, roads, walks, parking lots, or other real or personal property or interest in such property.

Federal financial assistance means any grant, loan, contract (other than a procurement contract or a contract of insurance or guaranty), or any other arrangement by which the Department provides or otherwise makes available assistance in the form of:

(a) Funds;

(b) Services of Federal personnel; or

(c) Real or personal property or any interest in, or use of such property, including:

(1) Transfers or leases of such property for less than fair market value or for reduced consideration; and

(2) Proceeds from a subsequent transfer or lease of such property if the Federal share of its fair market value is not returned to the Federal Government.

Handicapped person means (1) any person who (a) has a physical or mental impairment that substantially limits one or more major life activities, (b) has a record of such an impairment, or (c) is regarded as having such an impairment. (2) As used in this definition, the phrase:

(a) *Physical or mental impairment* means (i) any physiological disorder or condition, cosmetic disfigurement, or anatomical loss affecting one or more of the following body systems: neurological; musculoskeletal; special sense organs; respiratory, including speech organs; cardiovascular, reproductive; digestive; genito-urinary; hemic and lymphatic; skin; and endocrine; or (ii) any mental or psychological disorder, such as mental retardation, organic brain syndrome, emotional or mental illness, and specific learning disabilities. The term *physical or mental impairment* includes, but is not limited to, such diseases and conditions as orthopedic, visual, speech, and hearing impairments; cerebral palsy; epilepsy; muscular dystrophy; multiple sclerosis; cancer; heart disease; mental retardation; emotional illness; drug addiction; and alcoholism.

(b) *Major life activities* means functions such as caring for one's self, performing manual tasks, walking, seeing, hearing, speaking, breathing, learning, and working.

(c) *Has a record of such an impairment* means has a history of, or has been classified, or misclassified, as having a mental or physical impairment that substantially limits one or more major life activities.

(d) *Is regarded as having an impairment* means:

(1) Has a physical or mental impairment that does not substantially limit major life activities but that is treated by a recipient as constituting such a limitation;

(2) Has a physical or mental impairment that substantially limits major life activity only as a result of the attitudes of others toward such an impairment; or

(3) Has none of the impairments set forth in paragraph (1) of this definition, but is treated by a recipient as having such an impairment.

Head of Operating Administration means the head of an operating administration within the Department (U.S. Coast Guard, Federal Highway Administration, Federal Aviation Administration, Federal Railroad Administration, National Highway Traffic Safety Administration, Federal Transit Administration, and Research and Special Programs Administration) providing Federal financial assistance to the recipient.

Primary recipient means any recipient that is authorized or required to extend Federal financial assistance from the Department to another recipient.

Program or activity means all of the operations of any entity described in paragraphs (1) through (4) of this definition, any part of which is extended Federal financial assistance:

(1)(i) A department, agency, special purpose district, or other instrumentality of a State or of a local government; or

(ii) The entity of such State or local government that distributes such assistance and each such department or agency (and each other State or local government entity) to which the assistance is extended, in the case of assistance to a State or local government;

(2)(i) A college, university, or other postsecondary institution, or a public system of higher education; or

(ii) A local educational agency (as defined in 20 U.S.C. 7801), system of vocational education, or other school system;

(3)(i) An entire corporation, partnership, or other private organization, or an entire sole proprietorship—

(A) If assistance is extended to such corporation, partnership, private organization, or sole proprietorship as a whole; or

(B) Which is principally engaged in the business of providing education, health care, housing, social services, or parks and recreation; or

(ii) The entire plant or other comparable, geographically separate facility to which Federal financial assistance is extended, in the case of any other corporation, partnership, private organization, or sole proprietorship; or

(4) Any other entity which is established by two or more of the entities described in paragraph (1), (2), or (3) of this definition.

Qualified handicapped person means:

(1) With respect to employment, a handicapped person who, with reasonable accommodation and within normal safety requirements, can perform the essential functions of the job in question, but the term does not include any individual who is an alcoholic or drug abuser whose current use of alcohol or drugs prevents such person from performing the duties of the job in question or whose employment, by reason of such current alcohol or drug abuse, would constitute a direct threat to property or the safety of others; and

(2) With respect to other services, a handicapped person who meets the essential eligibility requirements for the receipt of such services.

Recipient means any State, territory, possession, the District of Columbia, or Puerto Rico, or any political subdivision thereof, or instrumentality thereof, any public or private agency, institution, organization, or other entity, or any individual in any State, territory, possession, the District of Columbia, or Puerto Rico, to whom Federal financial assistance from the Department is extended directly or through another recipient, including any successor, assignee, or transferee thereof, but such term does not include any ultimate beneficiary.

Secretary means the Secretary of Transportation.

Section 504 means section 504 of the Act.

Special service system means a transportation system specifically designed to serve the needs of persons who, by reason of disability, are physically unable to use bus systems designed for use by the general public. Special service is characterized by the use of vehicles smaller than a standard transit bus which are usable by handicapped persons, demand-responsive service, point of origin to point of destination service, and flexible routing and scheduling.

[44 FR 31468, May 31, 1979, as amended by Amdt. 1, 46 FR 37492, July 20, 1981; Amdt. 27–3, 51 FR 19017, May 23, 1986; 56 FR 45621, Sept. 6, 1991; 61 FR 32354, June 24, 1996; 61 FR 56424, Nov. 1, 1996; 68 FR 51390, Aug. 26, 2003]

§ 27.7 Discrimination prohibited.

(a) *General.* No qualified handicapped person shall, solely by reason of his disability, be excluded from participation in, be denied the benefits of, or otherwise be subjected to discrimination under any program or activity that receives Federal financial assistance administered by the Department of Transportation.

(b) *Discriminatory actions prohibited.* (1) A recipient, in providing any aid, benefit, or service, may not, directly or through contractual, licensing, or other arrangements, on the basis of disability:

(i) Deny a qualified handicapped person the opportunity to participate in or benefit from the aid, benefit, or service;

(ii) Afford a qualified handicapped person an opportunity to participate in or benefit from the aid, benefit, or service that is not substantially equal to that afforded persons who are not handicapped;

(iii) Provide a qualified handicapped person with an aid, benefit, or service that is not as effective in affording equal opportunity to obtain the same result, to gain the same benefit, or to reach the same level of achievement as persons who are not handicapped;

(iv) Provide different or separate aid, benefits, or services to handicapped persons or to any class of handicapped persons unless such action is necessary to provide qualified handicapped persons with aid, benefits or services that

are as effective as those provided to persons who are not handicapped;

(v) Aid or perpetuate discrimination against a qualified handicapped person by providing financial or other assistance to an agency, organization, or person that discriminates on the basis of disability in providing any aid, benefit, or service to beneficiaries of the recipient's program or activity;

(vi) Deny a qualified handicapped person the opportunity to participate in conferences, in planning or advising recipients, applicants or would-be applicants, or

(vii) Otherwise limit a qualified handicapped person in the enjoyment of any right, privilege, advantage, or opportunity enjoyed by others receiving an aid, benefit, or service.

(2) For purposes of this part, aids, benefits, and services, to be equally effective, are not required to produce the identical result or level of achievement for handicapped and nonhandicapped persons, but must afford handicapped persons equal opportunity to obtain the same result, to gain the same benefit, or to reach the same level of achievement, in the most integrated setting that is reasonably achievable.

(3) Even if separate or different aid, benefits, or services are available to handicapped persons, a recipient may not deny a qualified handicapped person the opportunity to participate in the programs or activities that are not separate or different.

(4) A recipient may not, directly or through contractual or other arrangements, utilize criteria or methods of administration:

(i) That have the effect of subjecting qualified handicapped persons to discrimination on the basis of disability,

(ii) That have the purpose or effect of defeating or substantially reducing the likelihood that handicapped persons can benefit by the objectives of the recipient's program or activity, or

(iii) That yield or perpetuate discrimination against another recipient if both recipients are subject to common administrative control or are agencies of the same State.

(5) In determining the site or location of a facility, an applicant or a recipient may not make selections:

(i) That have the effect of excluding handicapped persons from, denying them the benefits of, or otherwise subjecting them to discrimination under any program or activity that receives Federal financial assistance, or

(ii) That have the purpose or effect of defeating or substantially impairing the accomplishment of the objectives of the program or activity with respect to handicapped persons.

(6) As used in this section, the aid benefit, or service provided under a program or activity receiving Federal financial assistance includes any aid, benefit, or service provided in or through a facility that has been constructed, expanded, altered, leased or rented, or otherwise acquired, in whole or in part, with Federal financial assistance.

(c) *Communications.* Recipients shall take appropriate steps to ensure that communications with their applicants, employees, and beneficiaries are available to persons with impaired vision and hearing.

(d) *Aid, benefits, or services limited by Federal law.* For aid, benefits, or services authorized by Federal statute or executive order that are designed especially for the handicapped, or for a particular class of handicapped persons, the exclusion of nonhandicapped or other classes of handicapped persons is not prohibited by this part.

[44 FR 31468, May 31, 1979, as amended at 68 FR 51390, Aug. 26, 2003]

§ 27.9 Assurance required.

(a) *General.* Each application for Federal financial assistance to which this part applies, and each application to provide a facility, shall, as a condition to approval or extension of any Federal financial assistance pursuant to the application, contain, or be accompanied by, written assurance that the program or activity will be conducted or the facility operated in compliance with all the requirements imposed by or pursuant to this part. An applicant may incorporate these assurances by reference in subsequent applications to the Department.

(b) *Future effect of assurances.* Recipients of Federal financial assistance, and transferees of property obtained by a recipient with the participation of

Federal financial assistance, are bound by the recipient's assurance under the following circumstances:

(1) When Federal financial assistance is provided in the form of a conveyance of real property or an interest in real property from the Department of Transportation to a recipient, the instrument of conveyance shall include a convenant running with the land binding the recipient and subsequent transferees to comply with the requirements of this part for so long as the property is used for the purpose for which the Federal financial assistance was provided or for a similar purpose.

(2) When Federal financial assistance is used by a recipient to purchase or improve real property, the assurance provided by the recipient shall obligate the recipient to comply with the requirements of this part and require any subsequent transferee of the property, who is using the property for the purpose for which the Federal financial assistance was provided, to agree in writing to comply with the requirements of this part. The obligations of the recipient and transferees under this part shall continue in effect for as long as the property is used for the purpose for which Federal financial assistance was provided or for a similar purpose.

(3) When Federal financial assistance is provided to the recipient in the form of, or is used by the recipient to obtain, personal property, the assurance provided by the recipient shall obligate the recipient to comply with the requirements of this part for the period it retains ownership or possession of the property or the property is used by a transferee for purposes directly related to the operations of the recipient.

(4) When Federal financial assistance is used by a recipient for purposes other than to obtain property, the assurance provided shall obligate the recipient to comply with the requirements of this part for the period during which the Federal financial assistance is extended to the program or activity.

[44 FR 31468, May 31, 1979, as amended at 68 FR 51390, Aug. 26, 2003]

§ 27.11 Remedial action, voluntary action and compliance planning.

(a) *Remedial action.* (1) If the responsible Departmental official finds that a qualified handicapped person has been excluded from participation in, denied the benefits of, or otherwise subjected to discrimination under, any program or activity in violation of this part, the recipient shall take such remedial action as the responsible Departmental official deems necessary to overcome the effects of the violation.

(2) Where a recipient is found to have violated this part, and where another recipient exercises control over the recipient that has violated this part, the responsible Departmental official, where appropriate, may require either or both recipients to take remedial action.

(3) The responsible Departmental official may, where necessary to overcome the effects of a violation of this part, require a recipient to take remedial action:

(i) With respect to handicapped persons who are no longer participants in the recipient's program or activity but who were participants in the program or activity when such discrimination occurred, and

(ii) With respect to handicapped persons who would have been participants in the program or activity had the discrimination not occurred.

(b) *Voluntary action.* A recipient may take steps, in addition to any action that is required by this part, to assure the full participation in the recipient's program or activity by qualified handicapped persons.

(c) *Compliance planning.* (1) A recipient shall, within 90 days from the effective date of this part, designate and forward to the head of any operating administration providing financial assistance, with a copy to the responsible Departmental official the names, addresses, and telephone numbers of the persons responsible for evaluating the recipient's compliance with this part.

(2) A recipient shall, within 180 days from the effective date of this part, after consultation at each step in paragraphs (c)(2) (i)–(iii) of this section with interested persons, including handicapped persons and organizations representing the handicapped:

(i) Evaluate its current policies and practices for implementing these regulations, and notify the head of the operating administration of the completion of this evaluation;

(ii) Identify shortcomings in compliance and describe the methods used to remedy them;

(iii) Begin to modify, with official approval of recipient's management, any policies or practices that do not meet the requirements of this part according to a schedule or sequence that includes milestones or measures of achievement. These modifications shall be completed within one year from the effective date of this part;

(iv) Take appropriate remedial steps to eliminate the effects of any discrimination that resulted from previous policies and practices; and

(v) Establish a system for periodically reviewing and updating the evaluation.

(3) A recipient shall, for at least three years following completion of the evaluation required under paragraph (c)(2) of this section, maintain on file, make available for public inspection, and furnish upon request to the head of the operating administration:

(i) A list of the interested persons consulted;

(ii) A description of areas examined and any problems indentified; and

(iii) A description of any modifications made and of any remedial steps taken.

[44 FR 31468, May 31, 1979, as amended at 68 FR 51390, Aug. 26, 2003]

§ 27.13 Designation of responsible employee and adoption of grievance procedures.

(a) *Designation of responsible employee.* Each recipient that employs fifteen or more persons shall, within 90 days of the effective date of this regulation, forward to the head of the operating administration that provides financial assistance to the recipient, with a copy to the responsible Departmental official, the name, address, and telephone number of at least one person designated to coordinate its efforts to comply with this part. Each such recipient shall inform the head of the operating administration of any subsequent change.

(b) *Adoption of complaint procedures.* A recipient that employs fifteen or more persons shall, within 180 days, adopt and file with the head of the operating administration procedures that incorporate appropriate due process standards and provide for the prompt and equitable resolution of complaints alleging any action prohibited by this part.

§ 27.15 Notice.

(a) A recipient shall take appropriate initial and continuing steps to notify participants, beneficiaries, applicants, and employees, including those with impaired vision or hearing, and unions or professional organizations holding collective bargaining or professional agreements with the recipient, that it does not discriminate on the basis of disability. The notification shall state, where appropriate, that the recipient does not discriminate in admission or access to, or treatment or employment in, its programs or activities. The notification shall also include an identification of the responsible employee designated pursuant to § 27.13(a). A recipient shall make the initial notification required by this section within 90 days of the effective date of this part. Methods of initial and continuing notification may include the posting of notices, publication in newspapers and magazines, placement of notices in recipients' publications and distribution of memoranda or other written communications.

(b) If a recipient publishes or uses recruitment materials or publications containing general information that it makes available to participants, beneficiaries, applicants, or employees, it shall include in those materials or publications a statement of the policy described in paragraph (a) of this section. A recipient may meet the requirement of this paragraph either by including appropriate inserts in existing materials and publications or by revising and reprinting the materials and publications. In either case, the addition or revision must be specially noted.

§ 27.17 Effect of State or local law.

The obligation to comply with this part is not obviated or affected by any State or local law.

§ 27.19 Compliance with Americans with Disabilities Act requirements and FTA policy.

(a) Recipients subject to this part (whether public or private entities as defined in 49 CFR part 37) shall comply with all applicable requirements of the Americans with Disabilities Act (ADA) of 1990 (42 U.S.C. 12101–12213) including the Department's ADA regulations (49 CFR parts 37 and 38), the regulations of the Department of Justice implementing titles II and III of the ADA (28 CFR parts 35 and 36), and the regulations of the Equal Employment Opportunity Commission (EEOC) implementing title I of the ADA (29 CFR part 1630). Compliance with the EEOC title I regulations is required as a condition of compliance with section 504 for DOT recipients even for organizations which, because they have fewer than 25 or 15 employees, would not be subject to the EEOC regulation in its own right. Compliance with all these regulations is a condition of receiving Federal financial assistance from the Department of Transportation. Any recipient not in compliance with this requirement shall be subject to enforcement action under subpart F of this part.

(b) Consistent with FTA policy, any recipient of Federal financial assistance from the Federal Transit Administration whose solicitation was made before August 26, 1990, and is for one or more inaccessible vehicles, shall provide written notice to the Secretary (e.g., in the case of a solicitation made in the past under which the recipient can order additional new buses after the effective date of this section). The Secretary shall review each case individually, and determine whether the Department will continue to participate in the Federal grant, consistent with the provisions in the grant agreement between the Department and the recipient.

[55 FR 40763, Oct. 4, 1990, as amended at 56 FR 45621, Sept. 6, 1991; 61 FR 32354, June 24, 1996]

Subpart B—Accessibility Requirements in Specific Operating Administration Programs: Airports, Railroads, and Highways

§ 27.71 Airport facilities.

(a) This section applies to all terminal facilities and services owned, leased, or operated on any basis by a recipient of DOT financial assistance at a commercial service airport, including parking and ground transportation facilities.

(b) Airport operators shall ensure that the terminal facilities and services subject to this section shall be readily accessible to and usable by individuals with disabilities, including individuals who use wheelchairs. Airport operators shall be deemed to comply with this section 504 obligation if they meet requirements applying to state and local government programs or activities and facilities under Department of Justice (DOJ) regulations implementing Title II of the Americans with Disabilities Act (ADA).

(c) The airport shall ensure that there is an accessible path between the gate and the area from which aircraft are boarded.

(d) Systems of inter-terminal transportation, including, but not limited to, shuttle vehicles and people movers, shall comply with applicable requirements of the Department of Transportation's ADA rules.

(e) The Americans with Disabilities Act Accessibility Guidelines (ADAAGs), including section 10.4 concerning airport facilities, shall be the standard for accessibility under this section.

(f) Contracts or leases between carriers and airport operators concerning the use of airport facilities shall set forth the respective responsibilities of the parties for the provision of accessible facilities and services to individuals with disabilities as required by this part and applicable ADA rules of the Department of Transportation and Department of Justice for airport operators and applicable Air Carrier Access Act rules (49 CFR part 382) for carriers.

(g) If an airport operator who receives Federal financial assistance for

an existing airport facility has not already done so, the recipient shall submit a transition plan meeting the requirements of § 27.65(d) of this part to the FAA no later than March 3, 1997.

[61 FR 56424, Nov. 1, 1996, as amended at 68 FR 51391, Aug. 26, 2003]

§ 27.72 Boarding assistance for aircraft.

(a) Paragraphs (b)–(e) of this section apply to airports with 10,000 or more annual enplanements.

(b) Airports shall, in cooperation with carriers serving the airports, provide boarding assistance to individuals with disabilities using mechanical lifts, ramps, or other devices that do not require employees to lift or carry passengers up stairs. Paragraph (c) of this section applies to aircraft with a seating capacity of 19 through 30 passengers. Paragraph (d) of this section applies to aircraft with a seating capacity of 31 or more passengers.

(c)(1) Each airport operator shall negotiate in good faith with each carrier serving the airport concerning the acquisition and use of boarding assistance devices for aircraft with a seating capacity of 19 through 30 passengers. The airport operator and the carrier(s) shall, by no later than September 2, 1997, sign a written agreement allocating responsibility for meeting the boarding assistance requirements of this section between or among the parties. The agreement shall be made available, on request, to representatives of the Department of Transportation.

(2) The agreement shall provide that all actions necessary to ensure accessible boarding for passengers with disabilities are completed as soon as practicable, but no later than December 2, 1998, at large and medium commercial service hub airports (those with 1,200,000 or more annual enplanements); December 2, 1999, for small commercial service hub airports (those with between 250,000 and 1,199,999 annual enplanements); or December 2, 2000, for non-hub commercial service primary airports (those with between 10,000 and 249,999 annual enplanements). All air carriers and airport operators involved are jointly responsible for the timely and complete implementation of the agreement.

(3) Boarding assistance under the agreement is not required in the following situations:

(i) Access to aircraft with a capacity of fewer than 19 or more than 30 seats;

(ii) Access to float planes;

(iii) Access to the following 19-seat capacity aircraft models: the Fairchild Metro, the Jetstream 31, and the Beech 1900 (C and D models);

(iv) Access to any other 19-seat aircraft model determined by the Department of Transportation to be unsuitable for boarding assistance by lift, ramp or other suitable device on the basis of a significant risk of serious damage to the aircraft or the presence of internal barriers that preclude passengers who use a boarding or aisle chair to reach a non-exit row seat.

(4) When boarding assistance is not required to be provided under paragraph (c)(3) of this section, or cannot be provided as required by paragraphs (b) and (c) of this section (e.g., because of mechanical problems with a lift), boarding assistance shall be provided by any available means to which the passenger consents, except hand-carrying as defined in 14 CFR 382.39(a)(2).

(5) The agreement shall ensure that all lifts and other accessibility equipment are maintained in proper working condition.

(d)(1) Each airport operator shall negotiate in good faith with each carrier serving the airport concerning the acquisition and use of boarding assistance devices for aircraft with a seating capacity of 31 or more passengers where level entry boarding is not otherwise available. The airport operator and the carrier(s) shall, by no later than March 4, 2002 sign a written agreement allocating responsibility for meeting the boarding assistance requirements of this section between or among the parties. The agreement shall be made available, on request, to representatives of the Department of Transportation.

(2) The agreement shall provide that all actions necessary to ensure accessible boarding for passengers with disabilities are completed as soon as practicable, but no later than December 4,

2002. All air carriers and airport operators involved are jointly responsible for the timely and complete implementation of the agreement.

(3) Level-entry boarding assistance under the agreement is not required with respect to float planes or with respect to any widebody aircraft determined by the Department of Transportation to be unsuitable for boarding assistance by lift, ramp, or other device on the basis that no existing boarding assistance device on the market will accommodate the aircraft without a significant risk of serious damage to the aircraft or injury to passengers or employees.

(4) When level-entry boarding assistance is not required to be provided under paragraph (d)(3) of this section, or cannot be provided as required by paragraphs (b) and (d) of this section (e.g., because of mechanical problems with a lift), boarding assistance shall be provided by any available means to which the passenger consents, except hand-carrying as defined in 14 CFR 382.39(a)(2).

(5) The agreement shall ensure that all lifts and other accessibility equipment are maintained in proper working condition.

(e) In the event that airport personnel are involved in providing boarding assistance, the airport shall ensure that they are trained to proficiency in the use of the boarding assistance equipment used at the airport and appropriate boarding assistance procedures that safeguard the safety and dignity of passengers.

[66 FR 22115, May 3, 2001]

§ 27.75 Federal Highway Administration—highways.

(a) *New facilities*—(1) *Highway rest area facilities.* All such facilities that will be constructed with Federal financial assistance shall be designed and constructed in accordance with the accessibility standards referenced in § 27.3(b) of this part.

(2) *Curb cuts.* All pedestrian crosswalks constructed with Federal financial assistance shall have curb cuts or ramps to accommodate persons in wheelchairs, pursuant to section 228 of the Federal-Aid Highway Act of 1973 (23 U.S.C. 402(b)(1)(F)).

(3) *Pedestrian over-passes, under-passes and ramps.* Pedestrian over-passes, under-passes and ramps, constructed with Federal financial assistance, shall be accessible to handicapped persons, including having gradients no steeper than 10 percent, unless:

(i) Alternate safe means are provided to enable mobility-limited persons to cross the roadway at that location; or

(ii) It would be infeasible for mobility-limited persons to reach the over-passes, under-passes or ramps because of unusual topographical or architectural obstacles unrelated to the federally assisted facility.

(b) *Existing facilities—Rest area facilities.* Rest area facilities on Interstate highways shall be made accessible to handicapped persons, including wheelchair users, within a three-year period after the effective date of this part. Other rest area facilities shall be made accessible when Federal financial assistance is used to improve the rest area, or when the roadway adjacent to or in the near vicinity of the rest area is constructed, reconstructed or otherwise altered with Federal financial assistance.

[44 FR 31468, May 31, 1979, as amended by Amdt. 27–3, 51 FR 19017, May 23, 1986. Redesignated at 56 FR 45621, Sept. 6, 1991]

§ 27.77 Recipients of Essential Air Service subsidies.

Any air carrier receiving Federal financial assistance from the Department of Transportation under the Essential Air Service Program shall, as a condition of receiving such assistance, comply with applicable requirements of this part and applicable section 504 and ACAA rules of the Department of Transportation.

[61 FR 56425, Nov. 1, 1996, as amended at 68 FR 51391, Aug. 26, 2003]

Subpart C—Enforcement

SOURCE: 44 FR 31468, May 31, 1979, unless otherwise noted. Redesignated at 56 FR 45621, Sept. 6, 1991.

§ 27.121 Compliance information.

(a) *Cooperation and assistance.* The responsible Departmental official, to the

fullest extent practicable, seeks the cooperation of recipients in securing compliance with this part and provides assistance and guidance to recipients to help them comply with this part.

(b) *Compliance reports.* Each recipient shall keep on file for one year all complaints of noncompliance received. A record of all such complaints, which may be in summary form, shall be kept for five years. Each recipient shall keep such other records and submit to the responsible Departmental official or his/her designee timely, complete, and accurate compliance reports at such times, and in such form, and containing such information as the responsible Department official may prescribe. In the case in which a primary recipient extends Federal financial assistance to any other recipient, the other recipient shall also submit compliance reports to the primary recipient so as to enable the primary recipient to prepare its report.

(c) *Access to sources of information.* Each recipient shall permit access by the responsible Departmental official or his/her designee during normal business hours to books, records, accounts, and other sources of information, and to facilities that are pertinent to compliance with this part. Where required information is in the exclusive possession of another agency or person who fails or refuses to furnish the information, the recipient shall so certify in its report and describe the efforts made to obtain the information. Considerations of privacy or confidentiality do not bar the Department from evaluating or seeking to enforce compliance with this part. Information of a confidential nature obtained in connection with compliance evaluation or enforcement is not disclosed by the Department, except in formal enforcement proceedings, where necessary, or where otherwise required by law.

(d) *Information to beneficiaries and participants.* Each recipient shall make available to participants, beneficiaries, and other interested persons such information regarding the provisions of this regulation and its application to the program or activity for which the recipient receives Federal financial assistance, and make such information available to them in such manner, as the responsible Departmental official finds necessary to apprise them of the protections against discrimination provided by the Act and this part.

[44 FR 31468, May 31, 1979. Redesignated at 56 FR 45621, Sept. 6, 1991. 68 FR 51391, Aug. 26, 2003]

§ 27.123 Conduct of investigations.

(a) *Periodic compliance reviews.* The responsible Departmental official or his/her designee, from time to time, reviews the practices of recipients to determine whether they are complying with this part.

(b) *Complaints.* Any person who believes himself/herself or any specific class of individuals to be harmed by failure to comply with this part may, personally or through a representative, file a written complaint with the responsible Departmental official. A Complaint must be filed not later than 180 days from the date of the alleged discrimination, unless the time for filing is extended by the responsible Departmental official or his/her designee.

(c) *Investigations.* The responsible Departmental official or his/her designee makes a prompt investigation whenever a compliance review, report, complaint, or any other information indicates a possible failure to comply with this part. The investigation includes, where appropriate, a review of the pertinent practices and policies of the recipient, and the circumstances under which the possible noncompliance with this part occurred.

(d) *Resolution of matters.* (1) If, after an investigation pursuant to paragraph (c) of this section, the responsible Departmental official finds reasonable cause to believe that there is a failure to comply with this part, the responsible Departmental official will inform the recipient. The matter is resolved by informal means whenever possible. If the responsible Departmental official determines that the matter cannot be resolved by informal means, action is taken as provided in § 27.125.

(2) If an investigation does not warrant action pursuant to paragraph (d)(1) of this section, the responsible Departmental official or his/her designee so informs the recipient and the complainant, if any, in writing.

(e) *Intimidating and retaliatory acts prohibited.* No employee or contractor of a recipient shall intimidate, threaten, coerce, or discriminate against any individual for the purpose of interfering with any right or privilege secured by section 504 of the Act or this part, or because the individual has made a complaint, testified, assisted, or participated in any manner in an investigation, hearing, or proceeding, under this part. The identity of complainants is kept confidential at their election during the conduct of any investigation, hearing or proceeding under this part. However, when such confidentiality is likely to hinder the investigation, the complainant will be advised for the purpose of waiving the privilege.

§ 27.125 Compliance procedure.

(a) *General.* If there is reasonable cause for the responsible Departmental official to believe that there is a failure to comply with any provision of this part that cannot be corrected by informal means, the responsible Departmental official may recommend suspension or termination of, or refusal to grant or to continue Federal financial assistance, or take any other steps authorized by law. Such other steps may include, but are not limited to:

(1) A referral to the Department of Justice with a recommendation that appropriate proceedings be brought to enforce any rights of the United States under any law of the United States (including other titles of the Act), or any assurance or other contractural undertaking; and

(2) Any applicable proceeding under State or local law.

(b) *Refusal of Federal financial assistance.* (1) No order suspending, terminating, or refusing to grant or continue Federal financial assistance becomes effective until:

(i) The responsible Departmental official has advised the applicant or recipient of its failure to comply and has determined that compliance cannot be secured by voluntary means; and

(ii) There has been an express finding by the Secretary on the record, after opportunity for hearing, of a failure by the applicant or recipient to comply with a requirement imposed by or pursuant to this part.

(2) Any action to suspend, terminate, or refuse to grant or to continue Federal financial assistance is limited to the particular recipient who has failed to comply, and is limited in its effect to the particular program or activity, or part thereof, in which noncompliance has been found.

(c) *Other means authorized by law.* No other action is taken until:

(1) The responsible Departmental official has determined that compliance cannot be secured by voluntary means;

(2) The recipient or other person has been notified by the responsible Departmental official of its failure to comply and of the proposed action;

(3) The expiration of at least 10 days from the mailing of such notice to the recipient or other person. During this period, additional efforts are made to persuade the recipient or other person to comply with the regulations and to take such corrective action as may be appropriate.

[44 FR 31468, May 31, 1979. Redesignated at 56 FR 45621, Sept. 6, 1991. 68 FR 51391, Aug. 26, 2003]

§ 27.127 Hearings.

(a) *Opportunity for hearing.* Whenever an opportunity for a hearing is required by § 27.125(b), reasonable notice is given by the responsible Departmental official by registered or certified mail, return receipt requested, to the affected applicant or recipient. This notice advises the applicant or recipient of the action proposed to be taken, the specific provision under which the proposed action is to be taken, and the matters of fact or law asserted as the basis for this action, and either:

(1) Fixes a date not less than 20 days after the date of such notice within which the applicant or recipient may request a hearing; or

(2) Advises the applicant or recipient that the matter in question has been set for hearing at a stated place and time.

The time and place shall be reasonable and subject to change for cause. The complainant, if any, also is advised of the time and place of the hearing. An applicant or recipient may waive a

hearing and submit written information and argument for the record. The failure of an applicant or recipient to request a hearing constitutes a waiver of the right to a hearing under section 504 of the Act and §27.125(b), and consent to the making of a decision on the basis of such information as may be part of the record.

(b) If the applicant or recipient waives its opportunity for a hearing, the responsible Departmental official shall notify the applicant or recipient that it has the opportunity to submit written information and argument for the record. The responsible Departmental official may also place written information and argument into the record.

(c) *Time and place of hearing.* Hearings are held at the office of the Department in Washington, DC, at a time fixed by the responsible Departmental official unless he/she determines that the convenience of the applicant or recipient or of the Department requires that another place be selected. Hearings are held before an Administrative Law Judge designated in accordance with 5 U.S.C. 3105 and 3344 (section 11 of the Administrative Procedure Act).

(d) *Right to counsel.* In all proceedings under this section, the applicant or recipient and the responsible Departmental official have the right to be represented by counsel.

(e) *Procedures, evidence and record.* (1) The hearing, decision, and any administrative review thereof are conducted in conformity with sections 554 through 557 of title 5 of the United States Code, and in accordance with such rules of procedure as are proper (and not inconsistent with this section) relating to the conduct of the hearing, giving notice subsequent to those provided for in paragraph (a) of this section, taking testimony, exhibits, arguments and briefs, requests for findings, and other related matters. The responsible Departmental official and the applicant or recipient are entitled to introduce all relevant evidence on the issues as stated in the notice for hearing or as determined by the officer conducting the hearing. Any person (other than a government employee considered to be on official business) who, having been invited or requested to appear and testify as a witness on the government's behalf, attends at a time and place scheduled for a hearing provided for by this part may be reimbursed for his/her travel and actual expenses in an amount not to exceed the amount payable under the standardized travel regulations applicable to a government employee traveling on official business.

(2) Technical rules of evidence do not apply to hearings conducted pursuant to this part, but rules or principles designed to assure production of the most credible evidence available and to subject testimony to cross examination are applied where reasonably necessary by the Administrative Law Judge conducting the hearing. The Administrative Law Judge may exclude irrelevant, immaterial, or unduly repetitious evidence. All documents and other evidence offered or taken for the record are open to examination by the parties and opportunity is given to refute facts and arguments advanced by either side. A transcript is made of the oral evidence except to the extent the substance thereof is stipulated for the record. All decisions are based on the hearing record and written findings shall be made.

(f) *Consolidation or joint hearings.* In cases in which the same or related facts are asserted to constitute noncompliance with this regulation with respect to two or more Federal statutes, authorities, or other means by which Federal financial assistance is extended and to which this part applies, or noncompliance with this part and the regulations of one or more other Federal departments or agencies issued under section 504 of the Act, the responsible Departmental official may, in agreement with such other departments or agencies, where applicable, provide for consolidated or joint hearings. Final decisions in such cases, insofar as this regulation is concerned, are made in accordance with §27.129.

[44 FR 31468, May 31, 1979. Redesignated at 56 FR 45621, Sept. 6, 1991. 68 FR 51391, Aug. 26, 2003]

§27.129 Decisions and notices.

(a) *Decisions by Administrative Law Judge.* After the hearing, the Administrative Law Judge certifies the entire

record including his recommended findings and proposed decision to the Secretary for a final decision. A copy of the certification is mailed to the applicant or recipient and to the complainant, if any. The responsible Departmental official and the applicant or recipient may submit written arguments to the Secretary concerning the Administrative Law Judge's recommended findings and proposed decision.

(b) *Final decision by the Secretary.* When the record is certified to the Secretary by the Administrative Law Judge, the Secretary reviews the record and accepts, rejects, or modifies the Administrative Law Judge's recommended findings and proposed decision, stating the reasons therefor.

(c) *Decisions if hearing is waived.* Whenever a hearing pursuant to §27.125(b) is waived, the Secretary makes his/her final decision on the record, stating the reasons therefor.

(d) *Rulings required.* Each decision of the Administrative Law Judge or the Secretary contains a ruling on each finding or conclusion presented and specifies any failures to comply with this part.

(e) *Content of orders.* The final decision may provide for suspension or termination, or refusal to grant or continue Federal financial assistance, in whole or in part, to which this first regulation applies. The decision may contain such terms, conditions, and other provisions as are consistent with and will effectuate the purposes of the Act and this part, including provisions designed to assure that no Federal financial assistance to which this regulation applies will thereafter be extended unless and until the recipient corrects its noncompliance and satisfies the Secretary that it will fully comply with this part.

(f) *Subsequent proceedings.* (1) An applicant or recipient adversely affected by an order issued under paragraph (e) of this section is restored to full eligibility to receive Federal financial assistance if it satisfies the terms and conditions of that order or if it brings itself into compliance with this part and provides reasonable assurance that it will fully comply with this part.

(2) Any applicant or recipient adversely affected by an order entered pursuant to paragraph (e) of this section may, at any time, request the responsible Departmental official to restore its eligibility, to receive Federal financial assistance. Any request must be supported by information showing that the applicant or recipient has met the requirements of paragraph (f)(1) of this section. If the responsible Departmental official determines that those requirements have been satisfied, he/she may restore such eligibility, subject to the approval of the Secretary.

(3) If the responsible Departmental official denies any such request, the applicant or recipient may submit a request, in writing, for a hearing specifying why it believes the responsible Departmental official should restore it to full eligibility. It is thereupon given a prompt hearing, with a decision on the record. The applicant or recipient is restored to eligibility if it demonstrates to the satisfaction of the Secretary at the hearing that it satisfied the requirements of paragraph (f)(1) of this section.

(4) The hearing procedures of §27.127(b) through (c) and paragraphs (a) through (d) of this section apply to hearings held under paragraph (f)(3) of this section.

(5) While proceedings under this paragraph are pending, the sanctions imposed by the order issued under paragraph (e) of this section shall remain in effect.

[44 FR 31468, May 31, 1979. Redesignated at 56 FR 45621, Sept. 6, 1991. 68 FR 51391, Aug. 26, 2003]

PART 28—ENFORCEMENT OF NONDISCRIMINATION ON THE BASIS OF HANDICAP IN PROGRAMS OR ACTIVITIES CONDUCTED BY THE DEPARTMENT OF TRANSPORTATION

Sec.

28.101 Purpose.
28.102 Application.
28.103 Definitions.
28.104–28.109 [Reserved]
28.110 Self-evaluation.
28.111 Notice.
28.112–28.129 [Reserved]

28.130 General prohibition against discrimination.
28.131 Illegal use of drugs.
28.132–28.139 [Reserved]
28.140 Employment.
28.141–28.148 [Reserved]
28.149 Program accessibility: Discrimination prohibited.
28.150 Program accessibility: Existing facilities.
28.151 Program accessibility: New construction and alterations.
28.152–28.159 [Reserved]
28.160 Communications.
28.161–28.169 [Reserved]
28.170 Compliance procedures.
28.171–28.999 [Reserved]

AUTHORITY: 29 U.S.C. 794

SOURCE: 56 FR 37296, Aug. 6, 1991, unless otherwise noted.

§ 28.101 Purpose.

The purpose of this part is to carry out section 119 of the Rehabilitation, Comprehensive Services, and Developmental Disabilities Amendments of 1978, which amended section 504 of the Rehabilitation Act of 1973 to prohibit discrimination on the basis of handicap in programs or activities conducted by Executive agencies, including this Department, or the United States Postal Service. 49 CFR part 27 implements section 504 in the Department's financial assistance programs.

§ 28.102 Application.

This part applies to all programs or activities conducted by the Department except for programs and activities conducted outside the United States that do not involve individuals with handicaps in the United States.

§ 28.103 Definitions.

For purposes of this part, the term—

Assistant Attorney General means the Assistant Attorney General, Civil Rights Division, United States Department of Justice.

Auxiliary aids means services or devices that enable persons with impaired sensory, manual, or speaking skills to have an equal opportunity to participate in, and enjoy the benefits of, programs or activities conducted by the Department. For example, auxiliary aids useful for persons with impaired vision include readers, Brailled materials, audio recordings, and other similar services and devices. Auxiliary aids useful for persons with impaired hearing include telephone handset amplifiers, telephones compatible with hearing aids, telecommunication devices for deaf persons (TDD's), interpreters, notetakers, written materials, and other similar services and devices.

Complete complaint means a written statement that contains the complainant's name and address and describes the Department's alleged discriminatory actions in sufficient detail to inform the Department of the nature and date of the alleged violation of section 504. It shall be signed by the complainant or by someone authorized to do so on his or her behalf. Complaints filed on behalf of classes or third parties shall describe or identify (by name, if possible) the alleged victims of discrimination.

Current illegal use of drugs means illegal use of drugs that occurred recently enough to justify a reasonable belief that a person's drug use is current or that continuing use is a real and ongoing problem.

Drug means a controlled substance, as defined in schedules I through V of section 202 of the Controlled Substances Act (21 U.S.C. 812).

Department or *DOT* means the U.S. Department of Transportation, including the Office of the Secretary and all operating administrations.

Departmental Element (or ''DOT element'') means any one of the following organizations within the Department:

(a) Office of the Secretary (OST).

(b) United States Coast Guard (USCG).

(c) Federal Aviation Administration (FAA).

(d) Federal Highway Administration (FHWA).

(e) Federal Railroad Administration (FRA).

(f) National Highway Traffic Safety Administration (NHTSA).

(g) Federal Transit Administration (FTA).

(h) Research and Special Programs Administration (RSPA).

(i) Maritime Administration (MARAD).

(j) St. Lawrence Seaway Development Corporation (SLSDC).

Facility means all or any portion of buildings, structures, equipment, roads, walks, parking lots, rolling stock or other conveyances, or other real or personal property.

Illegal use of drugs means the use of one or more drugs, the possession or distribution of which is unlawful under the Controlled Substances Act (21 U.S.C. 812) The term ''illegal use of drugs'' does not include the use of a drug taken under supervision by a licensed health care professional, or other uses authorized by the Controlled Substances Act or other provisions of Federal law.

Individual with handicaps means any person who has a physical or mental impairment that substantially limits one or more major life activities, has a record of such an impairment, or is regarded as having such an impairment.

As used in this definition, the phrase:

(1) *Physical or mental impairment*—

(i) Includes any physiological disorder or condition, cosmetic disfigurement, or anatomical loss affecting one or more of the following body systems: Neurological; muscular; skeletal; special sense organs; respiratory, including speech organs; cardiovascular; reproductive; digestive; genitourinary; hemic and lymphatic; skin; and endocrine;

(ii) Includes any mental or psychological disorder, such as mental retardation, organic brain syndrome, emotional or mental illness, and specific learning disabilities; and

(iii) Includes, but is not limited to, such diseases or conditions as orthopedic, visual, speech, and hearing impairments, cerebral palsy, epilepsy, muscular dystrophy, multiple sclerosis, cancer, heart disease, diabetes, mental retardation, emotional illness, drug addiction, and alcoholism.

(2) *Major life activities* includes functions such as caring for one's self, performing manual tasks, walking, seeing, hearing, speaking, breathing, learning, and working.

(3) *Has a record of such an impairment* means has a history of, or has been misclassified as having, a mental or physical impairment that substantially limits one or more major life activities.

(4) *Is regarded as having an impairment* means—

(i) Has a physical or mental impairment that does not substantially limit major life activities but is treated by the Department as constituting such a limitation;

(ii) Has a physical or mental impairment that substantially limits major life activities only as a result of the attitudes of others toward such impairment; or

(iii) Has none of the impairments defined in paragraph (1) of this definition but is treated by the Department as having such an impairment.

Qualified individual with handicaps means—

(1) With respect to education services provided by the U.S. Merchant Marine Academy or the U.S. Coast Guard Academy, an individual with handicaps who meets the essential eligibility requirements for participation in and receipt of such services, including the physical standards applicable to the U.S. Naval Reserve or the U.S. Coast Guard.

(2) With respect to any other Department program or activity under which a person is required to perform services or to achieve a level of accomplishment, an individual with handicaps who meets the essential eligibility requirements and who can achieve the purpose of the program or activity without modifications in the program or activity that the Department can demonstrate would result in a fundamental alteration in its nature. The essential eligibility requirements include the ability to participate without endangering the safety of the individual or others.

(3) With respect to any other program or activity, an individual with handicaps who meets the essential eligibility requirements for participation in, or receipt of benefits from, that program or activity and

(4) *Qualified handicapped person* as that term is defined for purposes of employment in 29 CFR 1613.702(f), which is made applicable to this part by § 28.140.

Section 504 means section 504 of the Rehabilitation Act of 1973 (Pub. L. 93–112, 87 Stat. 394 (29 U.S.C. 794)), as amended by the Rehabilitation Act Amendments of 1974 (Pub. L. 93–516, 88

Stat. 1617), the Rehabilitation, Comprehensive Services, and Developmental Disabilities Amendments of 1978 (Pub. L. 95–602, 92 Stat. 2955); the Rehabilitation Act Amendments of 1986 (Pub. L. 99–506, 100 Stat. 1810); the Civil Rights Restoration Act of 1987 (Pub. L. 100–259, 102 Stat. 28), and Handicapped Program Technical Amendments Act of 1988 (Pub. L. 100–630, 102 Stat. 3312). As used in this part, section 504 applies only to programs or activities conducted by Executive agencies and not to federally assisted programs.

[56 FR 37296, Aug. 6, 1991, as amended at 61 FR 32354, June 24, 1996]

§§ 28.104–28.109 [Reserved]

§ 28.110 Self-evaluation.

(a) The Department shall, by one year of the effective date of this part, evaluate its current policies and practices, and effects thereof, that do not or may not meet the requirements of this part, and, to the extent modification of any such policies and practices is required, the Department shall proceed to make the necessary modifications.

(b) The Department shall provide an opportunity to interested persons, including individuals with handicaps, agency employees with handicaps, and organizations representing individuals with handicaps, to participate in the self-evaluation process by submitting comments (both oral and written).

(c) The Department shall, until at least three years following completion of the evaluation required under paragraph (a) of this section, or until such time as all modifications identified by the self-evaluation to be necessary to comply with section 504 have been completed, whichever occurs later, maintain on file and make available for public inspection—

(1) A description of areas examined, regulations and nonregulatory criteria reviewed, and any problems identified; and

(2) A description of any modifications made.

§ 28.111 Notice.

The Department shall make available to employees, applicants, participants, beneficiaries, and other interested persons such information regarding the provisions of this part and its applicability to the programs or activities conducted by the Department, and make such information available to them in such manner as the Department finds necessary to apprise such persons of the protections against discrimination assured them by section 504 and this regulation.

§§ 28.112–28.129 [Reserved]

§ 28.130 General prohibition against discrimination.

(a) No qualified individual with handicaps shall, on the basis of handicap, be excluded from participation in, be denied the benefits of, or otherwise be subjected to discrimination under any program or activity conducted by the Department.

(b)(1) The Department, in providing any aid, benefit, or service, may not, directly or through contractual, licensing, or other arrangement, on the basis of handicap—

(i) Deny a qualified individual with handicaps the opportunity to participate in or benefit from the aid, benefit, or service;

(ii) Afford a qualified individual with handicaps an opportunity to participate in or benefit from the aid, benefit, or service that is not equal to that afforded others;

(iii) Provide a qualified individual with handicaps with an aid, benefit, or service that is not as effective in affording equal opportunity to obtain the same result, to gain the same benefit, or to reach the same level of achievement as that provided to others;

(iv) Provide different or separate aid, benefits, or services to individuals with handicaps or to any class of individuals with handicaps than is provided to others unless such action is necessary to provide qualified individuals with handicaps with aid, benefits, or services that are as effective as those provided to others;

(v) Deny a qualified individual with handicaps the opportunity to participate as a member of planning or advisory boards; or

(vi) Otherwise limit a qualified individual with handicaps in the enjoyment of any right, privilege, advantage, or opportunity enjoyed by others receiving the aid, benefit, or service.

(2) The Department may not deny a qualified individual with handicaps the opportunity to participate in programs or activities that are not separate or different, despite the existence of permissibly separate or different programs or activities.

(3) The Department may not, directly or through contractual or other arrangements, utilize criteria or methods of administration the purpose or effect of which would—

(i) Subject qualified individuals with handicaps to discrimination on the basis of handicap; or

(ii) Defeat or substantially impair accomplishment of the objectives of a program or activity with respect to individuals with handicaps.

(4) The Department may not, in determining the site or location of a facility, make selections the purpose or effect of which would—

(i) Exclude individuals with handicaps from, deny them the benefits of, or otherwise subject them to discrimination under any program or activity conducted by the Department; or

(ii) Defeat or substantially impair the accomplishment of the objectives of a program or activity with respect to individuals with handicaps.

(5) The Department, in the selection of procurement contractors, may not use criteria that subject qualified individuals with handicaps to discrimination on the basis of handicap.

(6) The Department may not administer a licensing or certification program in a manner that subjects qualified individuals with handicaps to discrimination on the basis of handicap, nor may the Department establish requirements for the programs or activities of licensees or certified entities that subject qualified individuals with handicaps to discrimination on the basis of handicap. However, the programs or activities of entities that are licensed or certified by the Department are not, themselves, covered by this part. The Department may limit the programs or activities of a licensee or certificate holder, who is a qualified individual with handicaps, to the extent necessary to ensure the safety of that person or the safety of others.

(c) The exclusion of individuals without handicaps from the benefits of a program limited by Federal statute or Executive Order to individuals with handicaps or the exclusion of a specific class of individuals with handicaps from a program limited by Federal statute or Executive Order to a different class of individuals with handicaps is not prohibited by this part.

(d) The Department shall administer programs and activities in the most integrated setting appropriate to the needs of qualified individuals with handicaps.

§ 28.131 Illegal use of drugs.

(a) *General.* (1) Except as provided in paragraph (b) of this section, this part does not prohibit discrimination against an individual based on that individual's current illegal use of drugs.

(2) The agency shall not discriminate on the basis of illegal use of drugs against an individual who is not engaging in current illegal use of drugs and who—

(i) Has successfully completed a supervised drug rehabilitation program or has otherwise been rehabilitated successfully;

(ii) Is participating in a supervised rehabilitation program; or

(iii) Is erroneously regarded as engaging in such use.

(b) *Health and rehabilitation services.* The agency shall not deny health services or services provided under titles I, II, and III of the Rehabilitation Act to an individual on the basis of that individual's current illegal use of drugs, if the individual is otherwise entitled to such services.

(c) *Drug testing.* (1) This part does not prohibit the agency from adopting or administering reasonable policies or procedures, including but not limited to drug testing, designed to ensure that an individual who formerly engaged in the illegal use of drugs is not engaging in current illegal use of drugs.

(2) Nothing in paragraph (c) of this section shall be construed to encourage, prohibit, restrict, or authorize the conduct of testing for the illegal use of drugs.

§§ 28.132–28.139 [Reserved]

§ 28.140 Employment.

(a) No qualified individual with handicaps shall, on the basis of handicap, be subjected to discrimination in employment under any program or activity conducted by the Department.

(b) The definitions, requirements, and procedures of section 501 of the Rehabilitation Act of 1973 (29 U.S.C. 791), as established by the Equal Employment Opportunity Commission in 29 CFR part 1613, shall apply to employment in federally conducted programs or activities. The provisions of this section do not apply to military personnel of the U.S. Coast Guard.

§§ 28.141–28.148 [Reserved]

§ 28.149 Program accessibility: Discrimination prohibited.

Except as otherwise provided in § 28.150, no qualified individual with handicaps shall, because the Department's facilities are inaccessible to or unusable by individuals with handicaps, be denied the benefits of, be excluded from participation in, or otherwise be subjected to discrimination under any program or activity conducted by the Department.

§ 28.150 Program accessibility: Existing facilities.

(a) *General.* The Department shall operate each program or activity so that the program or activity, when viewed in its entirety, is readily accessible to and usable by individuals with handicaps. This paragraph does not—

(1) Necessarily require the Department to make each of its existing facilities accessible to and usable by individuals with handicaps;

(2) [Reserved]

(3) Require the Department to take any action that it can demonstrate would result in a fundamental alteration in the nature of a program or activity or in undue financial and administrative burdens. In those circumstances where personnel of a DOT element believe that the proposed action would fundamentally alter the program or activity or would result in undue financial and administrative burdens, the DOT element has the burden of proving that compliance with § 28.150(a) would result in such alteration or burdens. The decision that compliance would result in such alteration or burdens must be made by the Secretary or his or her designee, after considering all resources available for use in the funding and operation of the program or activity, and must be accompanied by a written statement of the reasons for reaching that conclusion. If an action would result in such an alteration or such burdens, the Department shall take any other action that would not result in such an alteration or such burdens but would nevertheless ensure that individuals with handicaps receive the benefits and services of the program or activity.

(b) *Methods.* The Department may comply with the requirements of this section through such means as redesign of equipment, reassignment of services to accessible buildings, assignment of aides to beneficiaries, home visits, delivery of services at alternate accessible sites, alteration of existing facilities and construction of new facilities, use of accessible rolling stock, or any other methods that result in making its programs or activities readily accessible to and usable by individuals with handicaps. The Department is not required to make structural changes in existing facilities where other methods are effective in achieving compliance with this section. The Department, in making alterations to existing buildings, shall meet accessibility requirements to the extent compelled by the Architectural Barriers Act of 1968, as amended (42 U.S.C. 4151–4157), and any regulations implementing it. In choosing among available methods for meeting the requirements of this section, the Department shall give priority to those methods that offer programs and activities to qualified individuals with handicaps in the most integrated setting appropriate.

(c) *Time period for compliance.* The Department shall comply with the obligations established under this section within sixty days of the effective date of this part except that where structural changes in facilities are undertaken, such changes shall be made within three years of the effective date

of this part, but in any event as expeditiously as possible. Provided that, where major restructuring of fixed facilities to accommodate technological changes is planned to occur within five years from the effective date of this part, changes needed to comply with this section are not required to be made until the planned restructuring takes place. However, alternative means for participation by individuals with handicaps in DOT programs and activities in the most integrated setting possible during this interim waiting period shall be available.

(d) *Transition plan.* In the event that structural changes to facilities will be undertaken to achieve program accessibility, the Department shall develop, within six months of the effective date of this part, a transition plan setting forth the steps necessary to complete such changes. The agency shall provide an opportunity to interested persons, including individuals with handicaps, agency employees with handicaps, or organizations representing individuals with handicaps, to participate in the development of the transition plan by submitting comments (both oral and written). A copy of the transition plan shall be made available for public inspection. The plan shall, at a minimum—

(1) Identify physical obstacles in the Department's facilities that limit the accessibility of its programs or activities to individuals with handicaps;

(2) Describe in detail the methods that will be used to make the facilities accessible;

(3) Specify the schedule for taking the steps necessary to achieve compliance with this section and, if the time period of the transition plan is longer than one year, identify steps that will be taken during each year of the transition period; and

(4) Indicate the official responsible for implementation of the plan.

§ 28.151 Program accessibility: New construction and alterations.

Each building or part of a building that is constructed or altered by, on behalf of, or for the use of the Department shall be designed, constructed, or altered so as to be readily accessible to and usable by individuals with handicaps. The definitions, requirements and standards of the Architectural Barriers Act (42 U.S.C. 4151–4157), as established in 41 CFR 101–19.600–607, apply to buildings covered by this section, except for military facilities of the Coast Guard, which are covered by 32 CFR part 56.

§§ 28.152–28.159 [Reserved]

§ 28.160 Communications.

(a) The Department shall take appropriate steps to ensure effective communication with applicants, participants, personnel of other Federal entities, and members of the public.

(1) The Department shall furnish appropriate auxiliary aids where necessary to afford an individual with handicaps an equal opportunity to participate in, and enjoy the benefits of, a program or activity conducted by the Department.

(i) In determining what type of auxiliary aid is necessary, the Department shall give primary consideration to the requests of the individual with handicaps.

(ii) The Department need not provide individually prescribed devices, readers for personal use or study, or other devices of a personal nature to applicants or participants in programs.

(2) Where the Department communicates with applicants and beneficiaries by telephone, telecommunications devices for deaf persons (TDDs) or equally effective telecommunication systems, shall be used to communicate with persons with impaired hearing.

(b) The Department shall ensure that interested persons, including persons with impaired vision or hearing, can obtain information as to the existence and location of accessible services, activities, and facilities.

(c) The Department shall provide signs at each primary entrance to each of its inaccessible facilities, directing users to a location at which they can obtain information as to the location of accessible facilities. The international symbol for accessibility shall be used at each primary entrance of an accessible facility.

(d) This section does not require the Department to take any action that it can demonstrate would result in a fundamental alteration in the nature of a

program or activity or in undue financial and administrative burdens. In those circumstances where personnel of a DOT element believe that the proposed action would fundamentally alter the program or activity or would result in an undue financial and administrative burden, the DOT element has the burden of proving that compliance with § 28.160 would result in such alteration or burden. The decision that compliance would result in such alteration or burden must be made by the Secretary or his or her designee, after considering all resources available for use in the funding and operation of the program or activity, and must be accompanied by a written statement of the reasons for reaching that conclusion. If an action required to comply with this section would result in such an alteration or such burdens, the Department shall take any other action that would not result in such an alteration or such a burden but would nevertheless ensure that, to the maximum extent possible, individuals with handicaps receive the benefits and services of the program or activity.

§§ 28.161–28.169 [Reserved]

§ 28.170 Compliance procedures.

(a) Except as provided in paragraph (b) of this section, paragraphs (c)–(k) of this section apply to all allegations of discrimination on the basis of handicap in programs of activities conducted by the Department;

(b)(1) The Department shall process complaints alleging violations of section 504 with respect to employment according to the procedures established by the Equal Employment Opportunity Commission in 29 CFR part 1613 pursuant to section 501 of the Rehabilitation Act of 1973 (29 U.S.C. 791).

(2) The Department shall process complaints alleging violations of section 504 with respect to requirements of any Department safety regulation, concerning an individual's qualifications to perform a function or to receive a certificate or license, according to the procedures for a petition for an individual waiver or request for review of a standard for possible amendment or recession. The Departmental element shall inform the complainant, in writing, or the decision on the request. The complainant may request reconsideration by the Departmental element of the decision. The decision on the petition or request shall constitute the Department's final action in the matter.

(c) Responsibility for implementation and operation of this section shall be vested in the Director, Departmental Office of Civil Rights.

(d)(1) The Department shall accept and investigate all complete complaints for which it has jurisdiction. All complete complaints must be filed within 180 days of the alleged act of discrimination. The Department may extend this time period for good cause.

(2) If the subject matter of a complete complaint concerns a decision by a Departmental element, under a safety regulation, concerning an individual's qualifications to perform a function or to receive a certificate or license, and the complainant has available within the Departmental element a formal review or appeal mechanism concerning that decision, the Department shall not take action on the complaint until the Departmental element's review or appeal process has been completed.

(e) If the Department receives a complaint over which it does not have jurisdiction, it shall promptly notify the complainant and shall make reasonable efforts to refer the complaint to the appropriate Government entity.

(f) The Department shall notify the Architectural and Transportation Barriers Compliance Board upon receipt of any complaint alleging that a building or facility that is subject to the Architectural Barriers Act of 1968, as amended (42 U.S.C. 4151–4157), is not readily accessible to and usable by individuals with handicaps.

(g) Within 180 days of the receipt of a complete complaint for which it has jurisdiction, the Department shall notify the complainant of the results of the investigation in a letter containing—

(1) Findings of fact and conclusions of law;

(2) A description of a remedy for each violation found; and

(3) A notice of the right to appeal.

(h) Appeals of the findings of fact and conclusions of law or remedies must be

filed by the complainant within 90 days of receipt from the Department of the letter required by §28.170(g). The Department may extend this time for good cause.

(i) Timely appeals shall be accepted and processed by the Assistant Secretary for Transportation Policy. The appeal will not be heard by the same person who made the initial determination on the request. The decision on the appeal shall constitute the Department's final action in the matter.

(j) The Department shall notify the complainant of the results of the appeal within 60 days of the receipt of the request. If the Department determines that it needs additional information from the complainant, it shall have 60 days from the date it receives the additional information to make its determination on the appeal.

(k) The time limits cited in paragraphs (g) and (j) of this section may be extended with the permission of the Assistant Attorney General.

(l) The Department may delegate its authority for conducting complaint investigations to other Federal agencies, except that the authority for making the final determination may not be delegated to another agency.

[56 FR 37296, Aug. 6, 1991, as amended at 59 FR 10061, Mar. 3, 1994]

§§ 28.171–28.999 [Reserved]

PART 30—DENIAL OF PUBLIC WORKS CONTRACTS TO SUPPLIERS OF GOODS AND SERVICES OF COUNTRIES THAT DENY PROCUREMENT MARKET ACCESS TO U.S. CONTRACTORS

Sec.
30.1 Purpose.
30.3 Applicability.
30.5 Effective dates.
30.7 Definitions.
30.9 Citizenship: Direct or indirect control.
30.11 Use of solicitation provisions and contract clauses.
30.13 Restrictions on Federal public works projects: Certification.
30.15 Restrictions on Federal public works projects.
30.17 Waivers.
30.19 Buy American Act.

AUTHORITY: 49 U.S.C. 322(a); Containing Resolution on the Fiscal Year 1988 Budget 109(a), Pub. L. 100–202; Airport and Airways Safety and Capacity Expansion Act of 1987, 115, Pub. L. 100–223.

SOURCE: 53 FR 19916, June 1, 1988, unless otherwise noted.

§30.1 Purpose.

The rules in this part implement section 109(a) of the Continuing Resolution on the Fiscal Year 1988 Budget, Public Law No. 100–202 (signed December 22, 1987) [the Continuing Resolution], and section 115 of the Airport and Airways Safety and Capacity Expansion Act of 1987, Public Law No. 100–223 (signed December 30, 1987) [the Airport Safety Act]. These rules are intended to give uniform implementation to these statutes throughout DOT procurement and grant programs.

§30.3 Applicability.

(a) The restrictions imposed by section 109(a) of the Continuing Resolution extend to all DOT agencies as well as all recipients of DOT funds. The restrictions apply to all projects for which funds are obligated or contracts or subcontracts are awarded during fiscal year 1988, including projects and contracts under all DOT financial assistance programs. The prohibition applies to public buildings and public works projects everywhere in the United States or any territory or possession of the United States. U.S. overseas bases, installations, and embassies are not subject to this part.

(b) The restrictions imposed by section 115 of the Airport Safety Act extend to all projects for which funds are made available by that Act, whether or not the contracts are awarded during fiscal year 1988. The restrictions apply to all contracts entered into under grants authorized by the Airport Safety Act.

(c) This part applies to projects covered by section 109(a) of the Continuing Resolution, section 115 of the Airport Safety Act, or both. Whether one or the other statute or both apply, the effect on the project shall be the same, subject to paragraph (e) of this section.

(d) In addition to construction, alteration, and repair contracts, the restrictions of this part cover all architect, engineering, and other services related to the preparation and performance of

construction, alteration, and repair of public projects and public works.

(e) The restrictions of this part also apply to all products used in the construction, alteration, or repair of public projects and public works; *Provided, however*, That

(1) The restrictions of this part do not apply to construction equipment or vehicles that do not become part of a delivered structure, product, or project and

(2) Notwithstanding paragraph (c) of this section, the restrictions of section 109(a) of the Continuing Resolution do not apply to vehicles to be used by the project, including, but not limited to, buses, trucks, automobiles, rail rolling stock, and aircraft.

§ 30.5 Effective dates.

The provisions of section 109(a) of the Continuing Resolution apply to contracts (or new subcontracts under existing contracts, whether or not subject to the restriction) entered into after December 22, 1987, its date of enactment, and before October 1, 1988. The provisions of section 115 of the Airport Safety Act apply to contracts funded by the Act and entered into after December 30, 1987, its date of enactment; the restrictions remain effective so long as money provided by the Airport Safety Act is used. Accordingly, any contracts or subcontracts subject to the restrictions of this part entered into with contractors or subcontractors owned or controlled by citizens of subject countries, as defined by §§ 30.7 and 30.9 of this part, since December 22, 1987 shall be canceled at no cost to the Government, subject to the waiver provisions of § 30.17 of this part. All public works or public buildings contracts entered into after December 22, 1987, shall include, or be modified to include, a provision prohibiting subcontracting with citizens of subject countries, as defined by §§ 30.7 and 30.9 of this part.

§ 30.7 Definitions.

(a) *Funds appropriated for FY 1988 by this resolution or any other law*, as used in this part with reference to section 109(a) of the Continuing Resolution, means all appropriated and trust funds available to DOT, its modal administration, or their grantees for expenditure or obligation in fiscal year 1988, regardless of the fiscal year in which the funds were appropriated.

(b) *Funds made available by this Act*, as used in this part with reference to section 115(a) of the Airport Safety Act, means all funds, including trust funds, made available to DOT, its modal administrations, or their grantees by that Act, whether or not the contracts to be funded are awarded during fiscal year 1988.

(c) *Contractor and subcontractor* means any person, other than a supplier of products, performing any architectural, engineering, or other service directly related to the preparation for or performance of the construction, alteration, or repair of any public building or public work in the United States or any territory or possession of the United States.

(d) *Contractor or subcontractor of a foreign country* means any contractor or subcontractor that is a citizen or national of a foreign country, or is controlled directly or indirectly by one or more citizens or nationals of a foreign country.

(e) *Service of a foreign country* means any service provided by a person that is a citizen or national of a foreign country, or is controlled by one or more citizens or nationals of a foreign country.

(f) *Product of a foreign country* means construction materials, i.e., articles, materials, and supplies brought to the construction site for incorporation into the public works project. A product is considered to have been produced in a foreign country if more than fifty percent of the total cost of the product is allocable to production or manufacture in the foreign country.

(g) *Foreign country* means a country included in the list of countries that discriminate against U.S. firms published by the U.S.T.R.

§ 30.9 Citizenship: Direct or indirect control.

A contractor, subcontractor, or person providing a service shall be considered to be a citizen or national of a foreign country, or controlled directly or indirectly by citizens or nationals of a

foreign country, within the meaning of this part.

(a) If 50 percent or more of the contractor or subcontractor is owned by one or more citizens or nationals of the foreign country;

(b) If the title to 50 percent or more of the stock of the contractor or subcontractor is held subject to trust or fiduciary obligation in favor of one or more citizens or nationals of the foreign country;

(c) If 50 percent or more of the voting power in the contractor or subcontractor is vested in or exercisable on behalf of one or more citizens or nationals of the foreign country;

(d) In the case of a partnership, if any general partner is a citizen or national of the foreign country;

(e) In the case of a corporation, if the number of its directors necessary to constitute a quorum are citizens of the foreign country or the corporation is organized under the laws of the foreign country or any subdivision, territory, or possession thereof; or

(f) In the case of a contractor or subcontractor that is a joint venture, if any participant meets any of the criteria in paragraphs (a) through (e) of this section.

§ 30.11 Use of solicitation provisions and contract clauses.

(a) Unless the President or the Secretary waives the restrictions imposed by section 109(a) of the Continuing Resolution in accordance with § 30.17 of this part, the contracting officer shall insert a clause similar to the clause at § 30.15, Restrictions on Federal Public Works Projects, in contractions and solicitations, if—

(1) The contract is awarded on or after December 22, 1987, and before October 1, 1988; and

(2) The contract obligates funds appropriated for use in FY 1988 by the Continuing Resolution or any other law; and

(3) The contract is for the acquisition of construction, alteration and repair, architectural, engineering, or other services directly related to the preparation for, or performance of, construction, alteration, and repair for Federal public works projects inside the United States, U.S. territories, or U.S. possessions.

(b) Unless the Secretary waives the restrictions imposed by section 115 of the Airport Safety Act in accordance with § 30.17 of this part, the contracting officer shall insert a clause similar to the clause at § 30.15, Restrictions on Federal Public Works Projects, in contracts and solicitations relating to any project for which funds, including grant funds, are made available by that Act, whether or not the contract is awarded during fiscal year 1988.

(c) Any contract already awarded that should have contained the clause prescribed in paragraph (a) or (b) of this section, but did not, shall be modified to include the clause. In the event that the contracting officer is unable to modify such contract, the contract shall be canceled at no cost to the Government, unless a waiver is granted in accordance with § 30.17 of this part.

(d) Contracting officers shall insert a provision similar to the solicitation provision at § 30.13 of this part, Restrictions on Public Works Projects—Certification, in solicitations containing the clause at § 30.15 of this part, Restrictions on Federal Public Works Projects.

(e) Any solicitation issued before December 22, 1987, that will result in the award of a contract covered by paragraph (a) of this section after December 22, 1987, and before October 1, 1988, and that should have contained a provision similar to that § 30.13 of this part, but did not, shall be amended to include the provision if the contract has not yet been awarded.

§ 30.13 Restrictions on Federal public works projects: Certification.

As prescribed in § 30.11(c) of this part, the contracting officer shall insert the following provision in solicitations containing the clause at § 30.15, *Restrictions on Federal Public Works Projects:*

RESTRICTIONS ON FEDERAL PUBLIC WORKS PROJECTS—CERTIFICATION

(a) Definitions. The definitions pertaining to this provision are those that are set forth in 49 CFR 30.7–30.9.

(b) Certification. By signing this solicitation, the Offeror certifies that with respect to this solicitation, and any resultant contract, the Offeror—

(1) Is [ ] is not [ ] a contractor of a foreign country included on the list of countries that discriminated against U.S. firms published by the Office of the United States Trade Representative (U.S.T.R.);

(2) Has [ ] has not [ ] entered into any contract or subcontract with a subcontractor of a foreign country included on the list of countries that discriminate against U.S. firms published by the U.S.T.R.; and

(3) Has [ ] has not [ ] entered into any subcontract for any product to be used on the Federal public works project that is produced in a foreign country included on the list of countries that discriminate against U.S. firms published by the U.S.T.R.

(c) Applicability of 18 U.S.C. 1001. This certification in this solicitation provision concerns a matter within the jurisdiction of an agency of the United States and the making of a false, fictitious, or fraudulent certification may render the maker subject to prosecution under Title 18, United States Code, Section 1001.

(d) Notice. The Offeror shall provide immediate written notice to the Contracting Officer if, at any time prior to contract award, the Offeror learns that its certification was erroneous when submitted or has become erroneous by reason of changed circumstances.

(e) Restrictions on contract award. No contract will be awarded to an offeror (1) who is owned or controlled by one or more citizens or nationals of a foreign country included on the list of countries that discriminate against U.S. firms published by the U.S.T.R. or (2) whose subcontractors are owned or controlled by one or more citizens or nationals of a foreign country on such U.S.T.R. list or (3) who incorporates in the public works project any product of a foreign country on such U.S.T.R. list; unless a waiver to these restrictions is granted by the President of the United States or the Secretary of Transportation. (Notice of the granting of a waiver will be published in the FEDERAL REGISTER.)

(f) System. Nothing contained in the foregoing shall be construed to require establishment of a system of records in order to render, in good faith, the certification required by paragraph (b) of this provision. The knowledge and information of an Offeror is not required to exceed that which is normally possessed by a prudent person in the ordinary course of business dealings.

(g) Subcontracts. The Offeror agrees that, if awarded a contract resulting from this solicitation, it will incorporate this solicitation provision, including this paragraph (g), in each solicitation issued under such contract.

(End of provision)

§ 30.15 Restrictions on Federal public works projects.

The contracting officer shall insert the following clause in solicitations and contracts as prescribed at § 30.11(a) through (b) of this part:

RESTRICTIONS ON FEDERAL PUBLIC WORKS PROJECTS

(a) *Definitions.* The definitions pertaining to this clause are those that are set forth in 49 CFR 30.7–30.9

(b) *General.* This clause implements the procurement provisions contained in the Continuing Resolution on the Fiscal Year 1988 Budget, Public Law No. 100–202, and the Airport and Airway Safety and Capacity Expansion Act of 1987, Public Law No. 100–223.

(c) *Restrictions.* The Contractor shall not knowingly enter into any subcontract under this contract: (1) With a subcontractor of a foreign country included on the list of countries that discriminate against U.S. firms published by the United States Trade Representative (U.S.T.R.); or (2) for the supply of any product for use on the Federal Public works project under this contract that is produced or manufactured in a foreign country included on the list of countries that discriminate against U.S. firms published by the U.S.T.R.

(d) *Certification.* The Contractor may rely upon the certification of a prospective subcontractor that it is not a subcontractor of a foreign country included on the list of countries that discriminates against U.S. firms published by the U.S.T.R. and that products supplied by such subcontractor for use on the Federal public works project under this contract are not products of a foreign country included on the list of countries that discriminate against U.S. firms published by the U.S.T.R., unless the contractor has knowledge that the certification is erroneous.

(e) Erroneous certification. The certification in paragraph (b) of the provision entitled ''Restriction on Federal Public Works Projects—Certification,'' is a material representation of fact upon which reliance was placed when making the award. If it is later determined that the Contractor knowingly rendered an erroneous certification, in addition to other remedies available to the Government, the Contracting Officer may cancel this contract for default at no cost to the Government.

(f) Cancellation. Unless the restrictions of this clause are waived as provided in paragraph (e) of the provision entitled ''Restriction on Federal Public Works Projects—Certification,'' if the Contractor knowingly enters into a subcontract with a subcontractor that is a subcontractor of a foreign country

included on the list of countries that discriminate against U.S. firms published by the U.S.T.R. or that supplies any product for use on the Federal public works project under this contract of a foreign country included on the list of countries that discriminate against U.S. firms published by the U.S.T.R., the Contracting Officer may cancel this contract for default, at no cost to the Government.

(g) Subcontracts. The Contractor shall incorporate this clause, without modification, including this paragraph (g) in all solicitations and subcontracts under this contract:

CERTIFICATION REGARDING RESTRICTIONS ON FEDERAL PUBLIC WORKS PROJECTS—SUBCONTRACTORS

(1) The Offeror/Contractor, by submission of an offer and/or execution of a contract certifies that the Offeror/Contractor is (i) not an Offeror/Contractor owned or controlled by one or more citizens or nationals of a foreign country included on the list of countries that discriminate against U.S. firms published by the United States Trade Representative (U.S.T.R.) or (2) not supplying any product for use on the Federal public works project that is produced or manufactured in a foreign country included on the list of foreign countries that discriminate against U.S. firms published by the U.S.T.R.

THIS CERTIFICATION CONCERNS A MATTER WITHIN THE JURISDICTION OF AN AGENCY OF THE UNITED STATES AND THE MAKING OF A FALSE FICTITIOUS, OR FRAUDULENT CERTIFICATION MAY RENDER THE MAKER SUBJECT TO PROSECUTION UNDER TITLE 18, UNITED STATES CODE, SECTION 1001

(2) The Offeror shall provide immediate written notice to the Contractor if, at any time, the Offeror learns that its certification was erroneous by reason of changed circumstances.

(3) The Contractor shall not knowingly enter into any subcontract under this contract: (i) with a subcontractor of a foreign country included on the list of countries that discriminate against U.S. firms published by the U.S.T.R.; or (ii) for the supply of any product for use on the Federal public works project under this contract that is produced or manufactured in a foreign country included on the list of countries that discriminate against U.S. firms published by the U.S.T.R. The contractor may rely upon the certification in paragraph (g)(1) of this clause unless it has knowledge that the certification is erroneous.

(4) Unless the restrictions of this clause have been waived under the contract for the Federal public works project, if a contractor knowingly enters into a subcontract with a subcontractor that is a subcontractor of a foreign country included on the list of countries that discriminate against U.S. firms published by the U.S.T.R. or that supplies any product for use on the Federal public works project under this contract that is produced or manufactured in a foreign country included on the list of countries that discriminate against U.S. firms published by the U.S.T.R., the Government Contracting Officer may direct, through higher-tier contractors, cancellation of this contract at no cost to the Government.

(5) Definitions. The definitions pertaining to this clause are those that are set forth in 49 CFR 30.7–30.9.

(6) The certification in paragraph (g)(1) of this clause is a material representation of fact upon which reliance was placed when making the award. If it is later determined that the Contractor knowingly rendered an erroneous certification, in addition to other remedies available to the Government, the Government Contracting Officer may direct, through higher-tier Contractors, cancellation of this subcontract at no cost to the Government.

(7) The Contractor agrees to insert this clause, without modification, including this paragraph, in all solicitations and subcontracts under this clause.

(End of clause)

§ 30.17 Waivers.

(a) The Secretary may waive the restrictions imposed by section 115 of the Airport Safety Act on the use of a product or service in a project if the Secretary determines that:

(1) Application of the restriction to such product, service, or project would not be in the public interest;

(2) Products or services of the same class or kind are not produced or offered in the United States, or in any foreign country that is not listed by the U.S.T.R. in sufficient and reasonable available quantities and of a satisfactory quality; or

(3) Exclusion of such product or service from the project would increase the cost of the overall project contract by more than 20 percent.

(b) The President or the Secretary may waive the restrictions imposed by section 109(a) of the Continuing Resolution with respect to an individual contract if the President or the Secretary

determines that such action is necessary in the public interest, on a contract-by-contract basis. The Secretary may apply the factors listed in paragraphs (a)(2) and (a)(3) of this section in determining whether a waiver is in the public interest.

(c) The authority of the President or the Secretary to issue waivers may not be delegated. The Department shall publish notice of any waiver granted pursuant to this part by the President or the Secretary in the FEDERAL REGISTER within ten days. The notice shall describe in detail the contract involved, the specific reasons for granting the waiver, and how the waiver meets the criteria of this section.

§30.19 Buy American Act.

The restrictions of this part are in addition to any other restrictions contained in Federal law, including the Buy American Act, 41 U.S.C. 10a–10d, and Buy American provisions in legislation governing DOT provisions. Normal evaluation methods for implementing the provisions of the Buy American Act in contracts for the construction, alteration, or repair of public buildings or public works will be applied after determining the offeror's eligible for award on the basis of application of the provisions in this part.

PART 31—PROGRAM FRAUD CIVIL REMEDIES

Sec.

31.1 Basis and purpose.
31.2 Definitions.
31.3 Basis for civil penalties and assessments.
31.4 Investigation.
31.5 Review by the reviewing official.
31.6 Prerequisites for issuing a complaint.
31.7 Complaint.
31.8 Service of complaint.
31.9 Answer.
31.10 Default upon failure to answer.
31.11 Referral of complaint and answer to the ALJ.
31.12 Notice of hearing.
31.13 Parties to the hearing.
31.14 Separation of functions.
31.15 Ex parte contacts.
31.16 Disqualification of reviewing official or ALJ.
31.17 Rights of parties.
31.18 Authority of the ALJ.
31.19 Prehearing conferences.
31.20 Disclosure of documents.
31.21 Discovery.
31.22 Exchange of witness lists, statements, and exhibits.
31.23 Subpoenas for attendance at hearing.
31.24 Protective order.
31.25 Fees.
31.26 Filing, form, and service of papers.
31.27 Computation of time.
31.28 Motions.
31.29 Sanctions.
31.30 The hearing and burden of proof.
31.31 Determining the amount of penalties and assessments.
31.32 Location of hearing.
31.33 Witnesses.
31.34 Evidence.
31.35 The record.
31.36 Post-hearing briefs.
31.37 Initial decision.
31.38 Reconsideration of initial decision.
31.39 Appeal to authority head.
31.40 Stays ordered by the Department of Justice.
31.41 Stay pending appeal.
31.42 Judicial review.
31.43 Collection of civil penalties and assessments.
31.44 Right to administrative offset.
31.45 Deposit in Treasury of United States.
31.46 Compromise or settlement.
31.47 Limitations.

AUTHORITY: 31 U.S.C. 3801–3812.

SOURCE: 53 FR 881, Jan. 14, 1988, unless otherwise noted.

§31.1 Basis and purpose.

(a) *Basis.* This part implements the Program Fraud Civil Remedies Act of 1986, Public Law No. 99–509, sections 6101–6104, 100 Stat. 1874 (October 21, 1986), to be codified at 31 U.S.C. 3801–3812. 31 U.S.C. 3809 of the statute requires each authority head to promulgate regulations necessary to implement the provisions of the statute.

(b) *Purpose.* This part (1) establishes administrative procedures for imposing civil penalties and assessments against persons who make, submit, or present, or cause to be made, submitted, or presented, false, fictitious, or fraudulent claims or written statements to the authority or to certain others, and (2) specifies the hearing and appeal rights of persons subject to allegations of liability for such penalties and assessments.

§ 31.2 Definitions.

ALJ means an Administrative Law Judge in the authority appointed pursuant to 5 U.S.C. 3105 or detailed to the authority pursuant to 5 U.S.C. 3344.

Authority means the Department of Transportation.

Authority head means the Assistant Secretary or Deputy Assistant Secretary for Budget and Programs, Department of Transportation.

Benefit means, in the context of ''statement,'' anything of value, including but not limited to any advantage, preference, privilege, license, permit, favorable decision, ruling, status, or loan guarantee.

Claim means any request, demand, or submission—

(a) Made to the authority for property, services, or money (including money representing grants, loans, insurance, or benefits);

(b) Made to a recipient of property, services, or money from the authority or to a party to a contract with the authority—

(1) For property or services if the United States—

(i) Provided such property or services;

(ii) Provided any portion of the funds for the purchase of such property or services; or

(iii) Will reimburse such recipient or party for the purchase of such property or services; or

(2) For the payment of money (including money representing grants, loans, insurance, or benefits) if the United States—

(i) Provided any portion of the money requested or demanded; or

(ii) Will reimburse such recipient or party for any portion of the money paid on such request or demand; or

(c) Made to the authority which has the effect of decreasing an obligation to pay or account for property, services, or money.

Complaint means the administrative complaint served by the reviewing official on the defendant under § 31.7.

Defendant means any person alleged in a complaint under § 31.7 to be liable for a civil penalty or assessment under § 31.3.

Government means the United States Government.

Individual means a natural person.

Initial decision means the written decision of the ALJ required by §§ 31.10 or 31.37 and includes a revised initial decision issued following a remand or a motion for reconsideration.

Investigating official means the Inspector General of the Department of Transportation or an officer or employee of the Office of Inspector General designated by the Inspector General and serving in a position for which the rate of basic pay is not less than the minimum rate of basic pay for grade GS–16 under the General Schedule.

Knows or has reason to know, means that a person, with respect to a claim or statement—

(a) Has actual knowledge that the claim or statement is false, fictitious, or fraudulent;

(b) Acts in deliberate ignorance of the truth or falsity of the claim or statement; or

(c) Acts in reckless disregard of the truth or falsity of the claim or statement.

Makes, wherever it appears, shall include the terms presents, submits, and causes to be made, presented, or submitted. As the context requires, *making* or *made*, shall likewise include the corresponding forms of such terms.

Person means any individual, partnership, corporation, association, or private organization, and includes the plural of that term.

Representative means an attorney who is a member in good standing of the bar of any State, Territory, or possession of the United States or of the District of Columbia or the Commonwealth of Puerto Rico. This definition is not intended to foreclose pro se appearances. An individual may appear for himself or herself, and a corporation or other entity may appear by an owner, officer, or employee of the corporation or entity.

Reviewing official means the Deputy General Counsel of the Department of Transportation, or other officer or employee of the Department who is designated by the Deputy General Counsel and eligible under 31 U.S.C. 3801(a)(8).

Statement means any representation, certification, affirmation, document,

record, or accounting or bookkeeping entry made—

(a) With respect to a claim or to obtain the approval or payment of a claim (including relating to eligibility to make a claim); or

(b) With respect to (including relating to eligibility for)—

(1) A contract with, or bid or proposal for a contract with; or

(2) A grant, loan, or benefit from,

the authority, or any State, political subdivision of a State, or other party, if the United States Government provides any portion of the money or property under such contract or for such grant, loan, or benefit, or if the Government will reimburse such State, political subdivision, or party for any portion of the money or property under such contract or for such grant, loan, or benefit.

§31.3 Basis for civil penalties and assessments.

(a) *Claims.* (1) Except as provided in paragraph (c) of this section, any person who makes a claim that the person knows or has reason to know—

(i) Is false, fictitious, or fraudulent;

(ii) Includes or is supported by any written statement which asserts a material fact which is false, fictitious, or fraudulent;

(iii) Includes or is supported by any written statement that—

(A) Omits a material fact;

(B) Is false, fictitious, or fraudulent as a result of such omission; and

(C) Is a statement in which the person making such statement has a duty to include such material fact; or

(iv) Is for payment for the provision of property or services which the person has not provided as claimed, shall be subject, in addition to any other remedy that may be prescribed by law, to a civil penalty of not more than $5,500 for each such claim.[1]

(2) Each voucher, invoice, claim form, or other individual request or demand for property, services, or money constitutes a separate claim.

(3) A claim shall be considered made to the authority, recipient, or party when such claim is actually made to an agent, fiscal intermediary, or other entity, including any State or political subdivision thereof, acting for or on behalf of the authority, recipient, or party.

(4) Each claim for property, services, or money is subject to a civil penalty regardless of whether such property, services, or money is actually delivered or paid.

(5) If the Government has made any payment (including transferred property or provided services) on a claim, a person subject to a civil penalty under paragraph (a)(1) of this section shall also be subject to an assessment of not more than twice the amount of such claim or that portion thereof that is determined to be in violation of paragraph (a)(1) of this section. Such assessment shall be in lieu of damages sustained by the Government because of such claim.

(b) *Statements.* (1) Except as provided in paragraph (c) of this section, any person who makes a written statement that—

(i) The person knows or has reason to know—

(A) Asserts a material fact which is false, fictitious, or fraudulent; or

(B) Is false, fictitious, or fraudulent because it omits a material fact that the person making the statement has a duty to include in such statement; and

(ii) Contains, or is accompanied by, an express certification or affirmation of the truthfulness and accuracy of the contents of the statement, shall be subject, in addition to any other remedy that may be prescribed by law, to a civil penalty of not more than $5,500.[2]

(2) Each written representation, certification, or affirmation constitutes a separate statement.

[1] As adjusted in accordance with the Federal Civil Penalties Inflation Adjustment Act of 1990 (Pub. L. 101–140), as amended by the Debt Collection Improvement Act of 1996 (Pub. L. 104–143, section 31001).

[2] As adjusted in accordance with the Federal Civil Penalties Inflation Adjustment Act of 1990 (Pub. L. 101–140), as amended by the Debt Collection Improvement Act of 1996 (Pub. L. 104–143, section 31001).

(3) A statement shall be considered made to the authority when such statement is actually made to an agent, fiscal intermediary, or other entity, including any State or political subdivision thereof, acting for or on behalf of the authority.

(c) No proof of specific intent to defraud is required to establish liability under this section.

(d) In any case in which it is determined that more than one person is liable for making a claim or statement under this section, each such person may be held liable for a civil penalty under this section.

(e) In any case in which it is determined that more than one person is liable for making a claim under this section on which the Government has made payment (including transferred property or provided services), an assessment may be imposed against any such person or jointly and severally against any combination of such persons.

[53 FR 881, Jan. 14, 1988, as amended at 62 FR 6720, Feb. 13, 1997]

§ 31.4 Investigation.

(a) If an investigating official concludes that a subpoena pursuant to the authority conferred by 31 U.S.C. 3804(a) is warranted—

(1) The subpoena so issued shall notify the person to whom it is addressed of the authority under which the subpoena is issued and shall identify the records or documents sought;

(2) The investigating official may designate a person to act on his or her behalf to receive the documents sought; and

(3) The person receiving such subpoena shall be required to tender to the investigating official or the person designated to receive the documents a certification that the documents sought have been produced, or that such documents are not available and the reasons therefor, or that such documents, suitably identified, have been withheld based upon the assertion of an identified privilege.

(b) If the investigating official concludes that an action under the Program Fraud Civil Remedies Act may be warranted, the investigating official shall submit a report containing the findings and conclusions of such investigation to the reviewing official.

(c) Nothing in this section shall preclude or limit an investigating official's discretion to refer allegations directly to the Department of Justice for suit under the False Claims Act or other civil relief, or to defer or postpone a report or referral to the reviewing official to avoid interference with a criminal investigation or prosecution.

(d) Nothing in this section modifies any responsibility of an investigating official to report violations of criminal law to the Attorney General.

§ 31.5 Review by the reviewing official.

(a) If, based on the report of the investigating official under § 31.4(b), the reviewing official determines that there is adequate evidence to believe that a person is liable under § 31.3 of this part, the reviewing official shall transmit to the Attorney General a written notice of the reviewing official's intention to issue a complaint under § 31.7.

(b) Such notice shall include—

(1) A statement of the reviewing official's reasons for issuing a complaint;

(2) A statement specifying the evidence that supports the allegations of liability;

(3) A description of the claims or statements upon which the allegations of liability are based;

(4) An estimate of the amount of money or the value of property, services, or other benefits requested or demanded in violation of § 31.3 of this part;

(5) A statement of any exculpatory or mitigating circumstances that may relate to the claims or statements known by the reviewing official or the investigating official; and

(6) A statement that there is a reasonable prospect of collecting an appropriate amount of penalties and assessments.

§ 31.6 Prerequisites for issuing a complaint.

(a) The reviewing official may issue a complaint under § 31.7 only if—

(1) The Department of Justice approves the issuance of a complaint in a written statement described in 31 U.S.C. 3803(b)(1), and

(2) In the case of allegations of liability under §31.3(a) with respect to a claim, the reviewing official determines that, with respect to such claim or a group of related claims submitted at the same time such claim is submitted (as defined in paragraph (b) of this section), the amount of money or the value of property or services demanded or requested in violation of §31.3(a) does not exceed $150,000.

(b) For the purposes of this section, a related group of claims submitted at the same time shall include only those claims arising from the same transaction (*e.g.*, grant, loan, application, or contract) that are submitted simultaneously as part of a single request, demand, or submission.

(c) Nothing in this section shall be construed to limit the reviewing official's authority to join in a single complaint against a person's claims that are unrelated or were not submitted simultaneously, regardless of the amount of money, or the value of property or services, demanded or requested.

§31.7 Complaint.

(a) On or after the date the Department of Justice approves the issuance of a complaint in accordance with 31 U.S.C. 3803(b)(1), the reviewing official may serve a complaint on the defendant, as provided in §31.8.

(b) The complaint shall state—

(1) The allegations of liability against the defendant, including the statutory basis for liability, an identification of the claims or statements that are the basis for the alleged liability, and the reasons why liability allegedly arises from such claims or statements;

(2) The maximum amount of penalties and assessments for which the defendant may be held liable;

(3) Instructions for filing an answer to request a hearing, including a specific statement of the defendant's right to request a hearing by filing an answer and to be represented by a representative; and

(4) That failure to file an answer within 30 days of service of the complaint will result in the imposition of the maximum amount of penalties and assessments without right to appeal, as provided in §31.10.

(c) At the same time the reviewing official serves the complaint, he or she shall serve the defendant with a copy of these regulations.

§31.8 Service of complaint.

(a) Service of a complaint must be made by certified or registered mail or by delivery in any manner authorized by Rule 4(d) of the Federal Rules of Civil Procedure. Service of a complaint is complete upon receipt.

(b) Proof of service, stating the name and address of the person on whom the complaint was served, and the manner and date of service, may be made by—

(1) Affidavit of the individual serving the complaint by delivery;

(2) A United States Postal Service return receipt card acknowledging receipt; or

(3) Written acknowledgment of receipt by the defendant or his or her representative.

§31.9 Answer.

(a) The defendant may request a hearing by serving an answer on the reviewing official within 30 days of service of the complaint. Service of an answer shall be made by delivering a copy to the reviewing official or by placing a copy in the United States mail, postage prepaid and addressed to the reviewing official. Service of an answer is complete upon such delivery or mailing. An answer shall be deemed to be a request for hearing.

(b) In the answer, the defendant—

(1) Shall admit or deny each of the allegations of liability made in the complaint;

(2) Shall state any defense on which the defendant intends to rely;

(3) May state any reasons why the defendant contends that the penalties and assessments should be less than the statutory maximum; and

(4) Shall state the name, address, and telephone number of the person authorized by the defendant to act as defendant's representative, if any.

(c) If the defendant is unable to file an answer meeting the requirements of paragraph (b) of this section within the time provided, the defendant may, before the expiration of 30 days from

service of the complaint, serve on the reviewing official a general answer denying liability and requesting a hearing, and a request for an extension of time within which to serve an answer meeting the requirements of paragraph (b) of this section. The reviewing official shall file promptly the complaint, the general answer denying liability, and the request for an extension of time as provided in §31.11. For good cause shown, the ALJ may grant the defendant up to 30 additional days from the original due date within which to serve an answer meeting the requirements of paragraph (b) of this section.

§ 31.10 Default upon failure to answer.

(a) If the defendant does not answer within the time prescribed in §31.9(a), the reviewing official may refer the complaint to an ALJ by filing the complaint and a statement that defendant has failed to answer on time.

(b) Upon the referral of the complaint, the ALJ shall promptly serve on defendant in the manner prescribed in §31.8, a notice that an initial decision will be issued under this section.

(c) In addition, the ALJ shall assume the facts alleged in the complaint to be true, and, if such facts establish liability under §31.3, the ALJ shall issue an initial decision imposing the maximum amount of penalties and assessments allowed under the statute.

(d) Except as otherwise provided in this section, by failing to answer on time, the defendant waives any right to further review of the penalties and assessments imposed under paragraph (c) of this section, and the initial decision shall become final and binding upon the parties 30 days after it is issued.

(e) If, before such an initial decision becomes final, the defendant files a motion seeking to reopen on the grounds that extraordinary circumstances prevented the defendant from answering, the initial decision shall be stayed pending the ALJ's decision on the motion.

(f) If, on such motion, the defendant can demonstrate extraordinary circumstances excusing the failure to answer on time, the ALJ shall withdraw the initial decision in paragraph (c) of this section, if such a decision has been issued, and shall grant the defendant an opportunity to answer the complaint.

(g) A decision of the ALJ denying a defendant's motion under paragraph (e) of this section is not subject to reconsideration under §31.38.

(h) The defendant may appeal to the authority head the decision denying a motion to reopen by filing a notice of appeal in accordance with §31.26 within 15 days after the ALJ denies the motion. The timely filing of a notice of appeal shall stay the initial decision until the authority head decides the issue.

(i) If the defendant files a timely notice of appeal, the Docket Clerk shall forward two copies of the notice of appeal to the authority head, and shall forward or make available the record of the proceeding to the authority head.

(j) The authority head shall decide expeditiously whether extraordinary circumstances excuse the defendant's failure to answer on time based solely on the record before the ALJ.

(k) If the authority head decides that extraordinary circumstances excused the defendant's failure to answer on time, the authority head shall remand the case to the ALJ with instructions to grant the defendant an opportunity to answer.

(l) If the authority head decides that the defendant's failure to answer on time is not excused, the authority head shall reinstate the initial decision of the ALJ, which shall become final and binding upon the parties 30 days after the authority head issues such decision.

§ 31.11 Referral of complaint and answer to the ALJ.

Upon receipt of an answer, the reviewing official shall refer the matter to an ALJ by filing the complaint and answer in accordance with §31.26.

§ 31.12 Notice of hearing.

(a) When the ALJ receives the complaint and answer, the ALJ shall promptly serve a notice of hearing upon the defendant in the manner prescribed by §31.8. At the time, the ALJ shall send a copy of such notice to the representative for the Government and shall file a copy with the Docket Clerk.

(b) Such notice shall include—

(1) The tentative time and place, and the nature of the hearing;

(2) The legal authority and jurisdiction under which the hearing is to be held;

(3) The matters of fact and law to be asserted;

(4) A description of the procedures for the conduct of the hearing;

(5) The name, address, and telephone number of the representative of the Government and of the defendant, if any; and

(6) Such other matters as the ALJ deems appropriate.

§ 31.13 Parties to the hearing.

(a) The parties to the hearing shall be the defendant and the authority.

(b) Pursuant to 31 U.S.C. 3730(c)(5), a private plaintiff under the False Claims Act may participate in these proceedings to the extent authorized by the provisions of that Act.

§ 31.14 Separation of functions.

(a) The investigating official, the reviewing official, and any employee or agent of the authority who takes part in investigating, preparing, or presenting a particular case may not, in such case or a factually related case—

(1) Participate in the hearing as the ALJ;

(2) Participate or advise in the initial decision or the review of the initial decision by the authority head, except as a witness or a representative in public proceedings; or

(3) Make the collection of penalties and assessments under 31 U.S.C. 3806.

(b) The ALJ shall not be responsible to, or subject to the supervision or direction of, the investigating official or the reviewing official.

(c) Except as provided in paragraph (a) of this section, the representative for the Government may be employed anywhere in the authority, including in the offices of either the investigating official or the reviewing official.

§ 31.15 Ex parte contacts.

No party or person (except employees of the ALJ's office) shall communicate in any way with the ALJ on any matter at issue in a case, unless on notice and opportunity for all parties to participate. This provision does not prohibit a person or party from inquiring about the status of a case or asking routine questions concerning administrative functions or procedures.

§ 31.16 Disqualification of reviewing official or ALJ.

(a) A reviewing official or ALJ in a particular case may disqualify himself or herself at any time.

(b) A party may file a motion for disqualification of a reviewing official or an ALJ. Such motion shall be accompanied by an affidavit alleging personal bias or other reason for disqualification.

(c) Such motion and affidavit shall be filed promptly upon the party's discovery of reasons requiring disqualification, or such objections shall be deemed waived.

(d) Such affidavit shall state specific facts that support the party's belief that personal bias or other reason for disqualification exists and the time and circumstances of the party's discovery of such facts. It shall be accompanied by a certificate of the representative of record that it is made in good faith.

(e)(1) If the ALJ determines that a reviewing official is disqualified, the ALJ shall dismiss the complaint without prejudice.

(2) If the ALJ disqualifies himself or herself, the case shall be reassigned promptly to another ALJ.

(3) If the ALJ denies a motion to disqualify, the authority head may determine the matter only as part of his or her review of the initial decision upon appeal, if any.

§ 31.17 Rights of parties.

Except as otherwise limited by this part, all parties may—

(a) Be accompanied, represented, and advised by a representative;

(b) Participate in any conference held by the ALJ;

(c) Conduct discovery;

(d) Agree to stipulations of fact or law, which shall be made part of the record;

(e) Present evidence relevant to the issues at the hearing;

(f) Present and cross-examine witnesses;

(g) Present oral arguments at the hearing as permitted by the ALJ; and

(h) Submit written briefs and proposed findings of fact and conclusions of law after the hearing.

§ 31.18 Authority of the ALJ.

(a) The ALJ shall conduct a fair and impartial hearing, avoid delay, maintain order, and assure that a record of the proceeding is made.

(b) The ALJ has the authority to—

(1) Set and change the date, time, and place of the hearing upon reasonable notice to the parties;

(2) Continue or recess the hearing in whole or in part for a reasonable period of time;

(3) Hold conferences to identify or simplify the issues, or to consider other matters that may aid in the expeditious disposition of the proceeding;

(4) Administer oaths and affirmations;

(5) Issue subpoenas requiring the attendance of witnesses and the production of documents at depositions or at hearings;

(6) Rule on motions and other procedural matters;

(7) Regulate the scope and timing of discovery;

(8) Regulate the course of the hearing and the conduct of representatives and parties;

(9) Examine witnesses;

(10) Receive, rule on, exclude, or limit evidence;

(11) Upon motion of a party, take official notice of facts;

(12) Upon motion of a party, decide cases, in whole or in part, by summary judgment where there is no disputed issue of material fact;

(13) Conduct any conference, argument, or hearing on motions in person or by telephone; and

(14) Exercise such other authority as is necessary to carry out the responsibilities of the ALJ under this part.

(c) The ALJ does not have the authority to find Federal statutes or regulations invalid.

§ 31.19 Prehearing conferences.

(a) The ALJ may schedule prehearing conferences as appropriate.

(b) Upon the motion of any party, the ALJ shall schedule at least one prehearing conference at a reasonable time in advance of the hearing.

(c) The ALJ may use prehearing conferences to discuss the following:

(1) Simplification of the issues;

(2) The necessity or desirability of amendments to the pleadings, including the need for a more definite statement;

(3) Stipulations and admissions of fact or as to the contents and authenticity of documents;

(4) Whether the parties can agree to submission of the case on a stipulated record;

(5) Whether a party chooses to waive appearance at an oral hearing and to submit only documentary evidence (subject to the objection of other parties) and written argument;

(6) Limitation of the number of witnesses;

(7) Scheduling dates for the exchange of witness lists and of proposed exhibits;

(8) Discovery;

(9) The time and place for the hearing; and

(10) Such other matters as may tend to expedite the fair and just disposition of the proceedings.

(d) The ALJ may issue an order containing all matters agreed upon by the parties or ordered by the ALJ at a prehearing conference.

§ 31.20 Disclosure of documents.

(a) Upon written request to the reviewing official, the defendant may review any relevant and material documents, transcripts, records, and other materials that relate to the allegations set out in the complaint and upon which the findings and conclusions of the investigating official under § 31.4(b) are based, unless such documents are subject to a privilege under Federal law. Upon payment of fees for duplication, the defendant may obtain copies of such documents.

(b) Upon written request to the reviewing official, the defendant also may obtain a copy of all exculpatory information in the possession of the reviewing official or investigating official relating to the allegations in the complaint, even if it is contained in a

document that would otherwise be privileged. If the document would otherwise be privileged, only that portion containing exculpatory information must be disclosed.

(c) The notice sent to the Attorney General from the reviewing official as described in § 31.5 is not discoverable under any circumstances.

(d) The defendant may file a motion to compel disclosure of the documents subject to the provisions of this section. Such a motion may only be filed following the serving of an answer pursuant to § 31.9.

§ 31.21 Discovery.

(a) The following types of discovery are authorized:

(1) Requests for production of documents for inspection and copying;

(2) Requests for admissions of the authenticity of any relevant document or of the truth of any relevant fact;

(3) Written interrogatories; and

(4) Depositions.

(b) For the purpose of this section and §§ 31.22 and 31.23, the term ''documents'' includes information, documents, reports, answers, records, accounts, papers, and other data and documentary evidence. Nothing contained herein shall be interpreted to require the creation of a document.

(c) Unless mutually agreed to by the parties, discovery is available only as ordered by the ALJ. The ALJ shall regulate the timing of discovery.

(d) *Motions for discovery*. (1) A party seeking discovery may file a motion. Such a motion shall be accompanied by a copy of the request for production of documents, request for admissions, or interrogatories, or in the case of depositions, a summary of the scope of the proposed deposition.

(2) Within ten days of service, a party may file an opposition to the motion and/or a motion for protective order as provided in § 31.24.

(3) The ALJ may grant a motion for discovery only if he or she finds that the discovery sought—

(i) Is necessary for the expeditious, fair, and reasonable consideration of the issues;

(ii) Is not unduly costly or burdensome;

(iii) Will not unduly delay the proceeding; and

(iv) Does not seek privileged information.

(4) The burden of showing that discovery should be allowed is on the party seeking discovery.

(5) The ALJ may grant discovery subject to a protective order under § 31.24.

(e) *Depositions*. (1) If a motion for deposition is granted, the ALJ shall issue a subpoena for the deponent, which may require the deponent to produce documents. The subpoena shall specify the time and place at which the deposition will be held.

(2) The party seeking to depose shall serve the subpoena in the manner prescribed in § 31.8.

(3) The deponent may file a motion to quash the subpoena or a motion for a protective order within ten days of service. If the ALJ has not acted on such a motion by the return date, such date shall be suspended pending the ALJ's final action on the motion.

(4) The party seeking to depose shall provide for the taking of a verbatim transcript of the deposition, which it shall make available to all other parties for inspection and copying.

(f) Each party shall bear its own costs of discovery.

§ 31.22 Exchange of witness lists, statements, and exhibits.

(a) At least 15 days before the hearing or at such other time as may be ordered by the ALJ, the parties shall exchange witness lists, copies of prior statements of proposed witnesses, and copies of proposed hearing exhibits, including copies of any written statements that the party intends to offer in lieu of live testimony in accordance with § 31.33(b). At the time the above documents are exchanged, any party that intends to rely on the transcript of deposition testimony in lieu of live testimony at the hearing, if permitted by the ALJ, shall provide each party with a copy of the specific pages of the transcript it intends to introduce into evidence.

(b) If a party objects, the ALJ shall not admit into evidence the testimony of any witness whose name does not appear on the witness list of any exhibit not provided to the opposing party as

provided above unless the ALJ finds good cause for the failure or that there is no prejudice to the objecting party.

(c) Unless another party objects within the time set by the ALJ, documents exchanged in accordance with paragraph (a) of this section shall be deemed to be authentic for the purpose of admissibility at the hearing.

§ 31.23 Subpoenas for attendance at hearing.

(a) A party wishing to procure the appearance and testimony of any individual at the hearing may request that the ALJ issue a subpoena.

(b) A subpoena requiring the attendance and testimony of an individual may also require the individual to produce documents at the hearing.

(c) A party seeking a subpoena shall file a written request therefor not less than 15 days before the date fixed for the hearing unless otherwise allowed by the ALJ for good cause shown. Such request shall be accompanied by a proposed subpoena, which shall specify and documents to be produced and shall designate the witnesses and describe the address and location thereof with sufficient particularity to permit such witnesses to be found.

(d) The subpoena shall specify the time and place at which the witness is to appear and any documents the witness is to produce.

(e) The party seeking the subpoena shall serve it in the manner prescribed in §31.8. A subpoena on a party or upon an individual under the control of party may be served by first class mail.

(f) A party or the individual to whom the subpoena is directed may file a motion to quash the subpoena within ten days after service or on or before the time specified in the subpoena for compliance if it is less than ten days after service. If the ALJ has not acted on such a motion by the return date, such date shall be suspended pending the ALJ's final action on the motion.

§ 31.24 Protective order.

(a) A party or a prospective witness or deponent may file a motion for a protective order with respect to discovery sought by an opposing party or with respect to the hearing, seeking to limit the availability or disclosure of evidence.

(b) In issuing a protective order, the ALJ may make any order which justice requires to protect a party or person from annoyance, embarrassment, oppression, or undue burden or expense, including one or more of the following:

(1) That the discovery not be had;

(2) That the discovery may be had only on specified terms and conditions, including a designation of the time or place;

(3) That the discovery may be had only through a method of discovery other than that requested;

(4) That certain matters not be inquired into, or that the scope of discovery be limited to certain matters;

(5) That discovery be conducted with no one present except persons designated by the ALJ;

(6) That the contents of discovery or evidence be sealed;

(7) That a deposition after being sealed be opened only by order of the ALJ;

(8) That a trade secret or other confidential research, development, commercial information, or facts pertaining to any criminal investigation, proceeding, or other administrative investigation not be disclosed or be disclosed only in a designated way; or

(9) That the parties simultaneously submit to the ALJ specified documents or information enclosed in sealed envelopes to be opened as directed by the ALJ.

§ 31.25 Fees.

The party requesting a subpoena shall pay the cost of the fees and mileage of any witness subpoenaed in the amounts that would be payable to a witness in a proceeding in United States District Court. A check for witness fees and mileage shall accompany the subpoena when served, except that when a subpoena is issued on behalf of the authority, a check for witness fees and mileage need not accompany the subpoena.

§ 31.26 Filing, form, and service of papers.

(a) *Filing and form.* (1) A party filing any document under this part shall submit (i) the original and two copies

to the Docket Operation Services, Department of Transportation, 1200 New Jersey Avenue, SE., Washington, DC 20590; and (ii) two copies simultaneously to the ALJ or, if on appeal, to the authority head. The requirements of this paragraph apply to all filings under this part, regardless of whether there is a cross-reference to §31.26.

(2) Every pleading and paper filed in the proceeding shall contain a caption setting forth the title of the action, the case number assigned by the Docket Clerk, and a designation of the paper (*e.g.*, motion to quash subpoena).

(3) Every pleading and paper shall be signed by, and shall contain the address and telephone nunber of, the party or the person on whose behalf the paper was filed, or his or her representative.

(4) Papers are considered filed when they are mailed. Date of mailing may be established by a certificate from the party or its representative or by proof that the document was sent by certified or registered mail.

(b) *Service.* A party filing a document shall, at the time of filing, serve a copy of such document on every other party. Service upon any party of any document other than those required to be served as prescribed in §31.8 shall be made by delivering a copy, or by placing a copy of the document in the United States mail, postage prepaid and addressed, to the party's last known address. When a party is represented by a representative, service shall be made upon such representative in lieu of the actual party.

(c) *Proof of service.* A certificate of the individual serving the document by personal delivery or by mail, setting forth the manner of service, shall be proof of service.

[53 FR 881, Jan. 14, 1988, as amended at 73 FR 33329, June 12, 2008]

§31.27 Computation of time.

(a) In computing any period of time under this part or in an order issued thereunder, the time begins with the day following the act, event, or default, and includes the last day of the period, unless it is a Saturday, Sunday, or legal holiday observed by the Federal government, in which event it includes the next business day.

(b) When the period of time allowed is less than seven days, intermediate Saturdays, Sundays, and legal holidays observed by the Federal government shall be excluded from the computation.

(c) Where a document has been served or issued by placing it in the United States mail, an additional five days will be added to the time permitted for any responses.

§31.28 Motions.

(a) Any application to the ALJ for an order or ruling shall be by motion. Motions shall state the relief sought, the authority relied upon, and the facts alleged, and shall be filed and served on all other parties.

(b) Except for motions made during a prehearing conference or at the hearing, all motions shall be in writing. The ALJ may require that oral motions be reduced to writing.

(c) Within 15 days after a written motion is served, or such other time as may be fixed by the ALJ, any party may file a response to such motion.

(d) The ALJ may not grant a written motion before the time for filing response thereto has expired, except upon consent of the parties or following a hearing on the motion, but may overrule or deny such motion without awaiting a response.

(e) The ALJ shall make a reasonable effort to dispose of all outstanding motions prior to the beginning of the hearing.

(f) Except as provided by §§31.21(e)(3) and 31.23(f), which concern subpoenas, the filing or pendency of a motion shall not automatically alter or extend a deadline or return date.

§31.29 Sanctions.

(a) The ALJ may sanction a person, including any party or representative, for—

(1) Failing to comply with an order, rule, or procedure governing the proceeding;

(2) Failing to prosecute or defend an action; or

(3) Engaging in other misconduct that interferes with the speedy, orderly, or fair conduct of the hearing.

(b) Sanctions include but are not limited to those specifically set forth in

paragraph (c), (d), and (e) of this section. Any such sanction shall reasonably relate to the severity and nature of the failure or misconduct.

(c) When a party fails to comply with an order, including an order for taking a deposition, the production of evidence within the party's control, or a request for admission, the ALJ may—

(1) Draw an inference in favor of the requesting party with regard to the information sought;

(2) In the case of requests for admission, deem each matter of which an admission is requested to be admitted;

(3) Prohibit the party failing to comply with such order from introducing evidence concerning, or otherwise relying upon, testimony relating to the information sought; and

(4) Strike any part of the pleadings or other submissions of the party failing to comply with such request.

(d) If a party fails to prosecute or defend an action under this part commenced by service of a notice of hearing, the ALJ may dismiss the action or may issue an initial decision imposition penalties and assessments.

(e) The ALJ may refuse to consider any motion, request, response, brief or other document which is not filed in a timely fashion.

§ 31.30 The hearing and burden of proof.

(a) The ALJ shall conduct a hearing on the record in order to determine whether the defendant is liable for a civil penalty or assessment under § 31.3 and, if so, the appropriate amount of any such civil penalty or assessment considering any aggravating or mitigating factors.

(b) The authority shall prove defendent's liability and any aggravating factors by a preponderance of the evidence.

(c) The defendant shall prove any affirmative defenses and any mitigating factors by a preponderance of the evidence.

(d) The hearing shall be open to the public unless otherwise ordered by the ALJ for good cause shown.

§ 31.31 Determining the amount of penalties and assessments.

(a) In determining an appropriate amount of civil penalties and assessments, the ALJ and the authority head, upon appeal, should evaluate any circumstances that mitigate or aggravate the violation and should articulate in their opinions the reasons that support the penalties and assessments they impose. Because of the intangible costs of fraud, the expense of investigating such conduct, and the need to deter others who might be similarly tempted, ordinarily double damages and a significant civil penalty should be imposed.

(b) Although not exhaustive, the following factors are among those that may influence the ALJ and the authority head in determining the amount of penalties and assessments to impose with respect to the misconduct (*i.e.*, the false fictitious, of fraudulent claims or statements) charged in the complaint:

(1) The number of false, fictitious, or fraudulent claims or statements;

(2) The time period over which such claims or statements were made;

(3) The degree of the defendant's culpability with respect to the misconduct;

(4) The amount of money or the value of the property, services, or benefit falsely claimed;

(5) The value of the Government's actual loss as a result of the misconduct, including foreseeable consequential damages and the costs of investigation;

(6) The relationship of the amount imposed as civil penalties to the amount of the Government's loss;

(7) The potential or actual impact of the misconduct upon national defense, public health or safety, or public confidence in the management of Government programs and operations, including particularly the impact on the intended beneficiaries of such programs;

(8) Whether the defendant has engaged in a pattern of the same or similar misconduct;

(9) Whether the defendant attempted to conceal the misconduct;

(10) The degree to which the defendant has involved others in the misconduct or in concealing it;

(11) Where the misconduct of employees or agents is imputed to the defendant, the extent to which the defendant's practices fostered or attempted to preclude such misconduct;

(12) Whether the defendant cooperated in or obstructed an investigation of the misconduct;

(13) Whether the defendant assisted in identifying and prosecuting other wrongdoers;

(14) The complexity of the program or transaction, and the degree of the defendant's sophistication with respect to it, including the extent of the defendant's prior participation in the program or in similar transactions;

(15) Whether the defendant has been found, in any criminal, civil, or administrative proceeding to have engaged in similar misconduct or to have dealt dishonestly with the Government of the United States or of a State, directly or indirectly; and

(16) The need to deter the defendant and others from engaging in the same or similar misconduct.

(c) Nothing in this section shall be construed to limit the ALJ or the authority head from considering any other factors that in any given case may mitigate or aggravate the offense for which penalties and assessments are imposed.

§ 31.32 Location of hearing.

(a) The hearing may be held—

(1) In any judicial district of the United States in which the defendant resides or transacts business;

(2) In any judicial district of the United States in which the claim or statement in issue was made; or

(3) In such other place as may be agreed upon by the defendant and the ALJ.

(b) Each party shall have the opportunity to present written and oral argument with respect to the location of the hearing.

(c) The hearing shall be held at the place and at the time ordered by the ALJ.

§ 31.33 Witnesses.

(a) Except as provided in paragraph (b) of this section, testimony at the hearing shall be given orally by witnesses under oath or affirmation.

(b) At the discretion of the ALJ, testimony may be admitted in the form of a written statement or deposition. Any such written statement must be provided to all other parties along with the last known address of such witness, in a manner which allows sufficient time for other parties to subpoena such witness for cross-examination at the hearing. Prior written statements of witnesses proposed to testify at the hearing and deposition transcripts shall be exchanged as provided in § 31.22(a).

(c) The ALJ shall exercise reasonable control over the mode and order of interrogating witnesses and presenting evidence so as to (1) make the interrogation and presentation effective for the ascertainment of the truth, (2) avoid needless consumption of time, and (3) protect witnesses from harassment or undue embarrassment.

(d) The ALJ shall permit the parties to conduct such cross-examination as may be required for a full and true disclosure of the facts.

(e) At the discretion of the ALJ, a witness may be cross-examined on matters relevant to the proceeding without regard to the scope of his or her direct examination. To the extent permitted by the ALJ, cross-examination on matters outside the scope of direct examination shall be conducted in the manner of direct examination and may proceed by leading questions only if the witness is a hostile witness, an adverse party, or a witness identified with an adverse party.

(f) Upon motion of any party, the ALJ shall order witnesses excluded so that they cannot hear the testimony of other witnesses. This rule does not authorize exclusion of—

(1) A party who is an individual;

(2) In the case of a party that is not an individual, an officer or employee of the party (i) appearing for the entity pro se or (ii) designated by the party's representative; or

(3) An individual whose presence is shown by a party to be essential to the presentation of its case, including an individual employed by the Government engaged in assisting the representative for the Government.

§ 31.34 Evidence.

(a) The ALJ shall determine the admissibility of evidence.

(b) Except as provided in this part, the ALJ shall not be bound by the Federal Rules of Evidence. However, the ALJ may apply the Federal Rules of Evidence where appropriate, *e.g.*, to exclude unreliable evidence.

(c) The ALJ shall exclude irrelevant and immaterial evidence.

(d) Although relevant, evidence may be excluded if its probative value is substantially outweighed by the danger of unfair prejudice, confusion of the issues, or by considerations of undue delay or needless presentation of cumulative evidence.

(e) Although relevant, evidence may be excluded if it is privileged under Federal law.

(f) Evidence concerning offers of compromise or settlement shall be inadmissible to the extent provided in Rule 408 of the Federal Rules of Evidence.

(g) The ALJ shall permit the parties to introduce rebuttal witnesses and evidence.

(h) All documents and other evidence offered or taken for the record shall be open to examination by all parties, unless otherwise ordered by the ALJ pursuant to § 31.24.

§ 31.35 The record.

(a) The hearing will be recorded and transcribed. Transcripts may be obtained following the hearing from the ALJ at a cost not to exceed the actual cost of duplication.

(b) The transcript of testimony, exhibits and other evidence admitted at the hearing, and all papers and requests filed in the proceeding constitute the record for the decision by the ALJ and the authority head.

(c) The record may be inspected at the offices of the Docket Clerk (see § 31.26(a)(1) for address) and copied (upon payment of a reasonable fee) by anyone, unless otherwise ordered by the ALJ pursuant to § 31.24.

§ 31.36 Post-hearing briefs.

The ALJ may require the parties to file post-hearing briefs. In any event, any party may file a post-hearing brief. The ALJ shall fix the time for filing such briefs. Such briefs may be accompanied by proposed findings of fact and conclusions of law. The ALJ may permit the parties to file reply briefs.

§ 31.37 Initial decision.

(a) The ALJ shall issue an initial decision based only on the record, which shall contain findings of fact, conclusions of law, and the amount of any penalties and assessments imposed.

(b) The findings of fact shall include a finding on each of the following issues:

(1) Whether the claims or statements identified in the complaint, or any portions thereof, violate § 31.3;

(2) If the person is liable for penalties or assessments, the appropriate amount of any such penalties or assessments considering any mitigating or aggravating factors that he or she finds in the case, such as those described in § 31.31.

(c) The ALJ shall promptly serve the intitial decision on all parties within 90 days after the time for submission of post-hearing briefs and reply briefs (if permitted) has expired. The ALJ shall at the same time serve all parties with a statement describing the right of any defendant determined to be liable for a civil penalty or assessment to file a motion for reconsideration with the ALJ or a notice of appeal with the authority head. If the ALJ fails to meet the deadline contained in this paragraph, he or she shall notify the parties of the reason for the delay and shall set a new deadline.

(d) Unless the initial decision of the ALJ is timely appealed to the authority head, or a motion for reconsideration of the intitial decision is timely filed, the initial decision shall constitute the final decision of the authority head and shall be final and binding on the parties 30 days after it is issued by the ALJ.

§ 31.38 Reconsideration of initial decision.

(a) Except as provided in paragraph (d) of this section, any party may file a motion for reconsideration of the initial decision within 20 days of receipt of the initial decision. If service was made by mail, receipt will be presumed to be five days from the date of mailing in the absence of contrary proof.

(b) Every such motion must set forth the matters claimed to have been erroneously decided and the nature of the alleged errors. Such motion shall be accompanied by a supporting brief.

(c) Responses to such motions shall be allowed only upon request of the ALJ.

(d) No party may file a motion for reconsideration of an initial decision that has been revised in response to a previous motion for reconsideration.

(e) The ALJ may dispose of a motion for reconsideration by denying it or by issuing a revised initial decision.

(f) If the ALJ denies a motion for reconsideration, the initial decision shall constitute the final decision of the authority head and shall be final and binding on the parties 30 days after the ALJ denies the motion, unless the initial decision is timely appealed to the authority head in accordance with § 31.39.

(g) If the ALJ issues a revised initial decision, that decision shall constitute the final decision of the authority head and shall be final and binding on the parties 30 days after it is issued, unless it is timely appealed to the authority head in accordance with § 31.39.

§ 31.39 Appeal to authority head.

(a) Any defendant who has served a timely answer and who is determined in an initial decision to be liable for a civil penalty or assessment may appeal such decision to the authority head by filing a notice of appeal in accordance with this section and § 31.26.

(b)(1) A notice of appeal may be filed at any time within 30 days after the ALJ issues an initial decision. However, if another party files a motion for reconsideration under § 31.38, consideration of the appeal shall be stayed automatically pending resolution of the motion for reconsideration.

(2) If a motion for reconsideration is timely filed, a notice of appeal may be filed within 30 days after the ALJ denies the motion or issues a revised initial decision, whichever applies.

(3) The authority head may extend the initial 30-day period for an additional 30 days if the defendant files with the authority head a request for an extension within the initial 30-day period and shows good cause.

(c) If the defendant files a timely notice of appeal and the time for filing motions for reconsideration under § 31.38 has expired, the Docket Clerk shall forward two copies of the notice of appeal to the authority head, and shall forward or make available the record of the proceeding to the authority head.

(d) A notice of appeal shall be accompanied by a written brief specifying exceptions to the initial decision and reasons supporting the exceptions.

(e) The representative for the Government may file a brief in opposition to exceptions within 30 days of receiving the notice of appeal and accompanying brief.

(f) There is no right to appear personally before the authority head.

(g) There is no right to appeal any interlocutory ruling by the ALJ.

(h) In reviewing the initial decision, the authority head shall not consider any objection that was not raised before the ALJ unless a demonstration is made of extraordinary circumstances causing the failure to raise the objection.

(i) If any party demonstrates to the satisfaction of the authority head that additional evidence not presented at such hearing is material and that there were reasonable grounds for the failure to present such evidence at such hearing, the authority head shall remand the matter to the ALJ for consideration of such additional evidence.

(j) The authority head may affirm, reduce, reverse, compromise, remand, or settle any penalty or assessment determined by the ALJ in any initial decision.

(k) The authority head shall promptly serve each party to the appeal with a copy of the decision of the authority head and with a statement describing the right of any person determined to be liable for a penalty or assessment to seek judicial review.

(l) Unless a petition for review is filed as provided in 31 U.S.C. 3805 after a defendant has exhausted all administrative remedies under this part and within 60 days after the date on which the authority head serves the defendant with a copy of the authority head's

decision, a determination that a defendant is liable under § 31.3 is final and is not subject to judicial review.

§ 31.40 Stays ordered by the Department of Justice.

If at any time the Attorney General or an Assistant Attorney General designated by the Attorney General transmits to the authority head a written finding that continuation of the administrative process described in this part with respect to a claim or statement may adversely affect any pending or potential criminal or civil action related to such claim or statement, the authority head shall stay the process immediately. The authority head may order the process resumed only upon receipt of the written authorization of the Attorney General.

§ 31.41 Stay pending appeal.

(a) An initial decision is stayed automatically pending disposition of a motion for reconsideration or of an appeal to the authority head.

(b) No administrative stay is available following a final decision of the authority head.

§ 31.42 Judicial review.

Section 3805 of title 31, United States Code, authorizes judicial review by an appropriate United States District Court of a final decision of the authority head imposing penalties or assessments under this part and specifies the procedures for such review.

§ 31.43 Collection of civil penalties and assessments.

Sections 3806 and 3808(b) of title 31, United States Code, authorize actions for collection of civil penalties and assessments imposed under this part and specify the procedures for such actions.

§ 31.44 Right to administrative offset.

The amount of any penalty or assessment which has become final, or for which a judgment has been entered under § 31.42 or § 31.43, or any amount agreed upon in a compromise or settlement under § 31.46, may be collected by administrative offset under 31 U.S.C. 3716, except that an administrative offset may not be made under this subsection against a refund of an overpayment of Federal taxes, then or later owing by the United States to the defendant.

§ 31.45 Deposit in Treasury of United States.

All amounts collected pursuant to this part shall be deposited as miscellaneous receipts in the Treasury of the United States, except as provided in 31 U.S.C. 3806(g).

§ 31.46 Compromise or settlement.

(a) Parties may make offers of compromise or settlement at any time.

(b) The reviewing official has the exclusive authority to compromise or settle a case under this part at any time after the date on which the reviewing official is permitted to issue a complaint and before the date on which the ALJ issues an initial decision.

(c) The authority head has exclusive authority to compromise or settle a case under this part at any time after the date on which the ALJ issues an initial decision, except during the pendency of any review under § 31.42 or during the pendency of any action to collect penalties and assessments under § 31.43.

(d) The Attorney General has exclusive authority to compromise or settle a case under this part during the pendency of any review under § 31.42 or of any action to recover penalties and assessments under 31 U.S.C. 3806.

(e) The investigating official may recommend settlement terms to the reviewing official, the authority head, or the Attorney General, as appropriate. The reviewing official may recommend settlement terms to the authority head, or the Attorney General, as appropriate.

(f) Any compromise or settlement must be in writing.

§ 31.47 Limitations.

(a) The notice of hearing with respect to a claim or statement must be served in the manner specified in § 31.8 within 6 years after the date on which such claim or statement is made.

(b) If the defendant fails to serve a timely answer, service of a notice under § 31.10(b) shall be deemed a notice of hearing for purposes of this section.

(c) The statute of limitations may be extended by agreement of the parties.

PART 32—GOVERNMENTWIDE REQUIREMENTS FOR DRUG-FREE WORKPLACE (FINANCIAL ASSISTANCE)

Subpart A—Purpose and Coverage

Sec.
32.100 What does this part do?
32.105 Does this part apply to me?
32.110 Are any of my Federal assistance awards exempt from this part?
32.115 Does this part affect the Federal contracts that I receive?

Subpart B—Requirements for Recipients Other Than Individuals

32.200 What must I do to comply with this part?
32.205 What must I include in my drug-free workplace statement?
32.210 To whom must I distribute my drug-free workplace statement?
32.215 What must I include in my drug-free awareness program?
32.220 By when must I publish my drug-free workplace statement and establish my drug-free awareness program?
32.225 What actions must I take concerning employees who are convicted of drug violations in the workplace?
32.230 How and when must I identify workplaces?

Subpart C—Requirements for Recipients Who Are Individuals

32.300 What must I do to comply with this part if I am an individual recipient?
32.301 [Reserved]

Subpart D—Responsibilities of DOT Awarding Officials

32.400 What are my responsibilities as a DOT awarding official?

Subpart E—Violations of This Part and Consequences

32.500 How are violations of this part determined for recipients other than individuals?
32.505 How are violations of this part determined for recipients who are individuals?
32.510 What actions will the Federal Government take against a recipient determined to have violated this part?
32.515 Are there any exceptions to those actions?

Subpart F—Definitions

32.605 Award.
32.610 Controlled substance.
32.615 Conviction.
32.620 Cooperative agreement.
32.625 Criminal drug statute.
32.630 Debarment.
32.635 Drug-free workplace.
32.640 Employee.
32.645 Federal agency or agency.
32.650 Grant.
32.655 Individual.
32.660 Recipient.
32.665 State.
32.670 Suspension.

AUTHORITY: 41 U.S.C. 701 *et seq.*

SOURCE: 68 FR 66645, Nov. 26, 2003, unless otherwise noted.

Subpart A—Purpose and Coverage

§ 32.100 What does this part do?

This part carries out the portion of the Drug-Free Workplace Act of 1988 (41 U.S.C. 701 *et seq.*, as amended) that applies to grants. It also applies the provisions of the Act to cooperative agreements and other financial assistance awards, as a matter of Federal Government policy.

§ 32.105 Does this part apply to me?

(a) Portions of this part apply to you if you are either—

(1) A recipient of an assistance award from the Department of Transportation; or

(2) A(n) DOT awarding official. (See definitions of award and recipient in §§ 32.605 and 32.660, respectively.)

(b) The following table shows the subparts that apply to you:

If you are . . .	see subparts . . .
(1) A recipient who is not an individual	A, B and E.
(2) A recipient who is an individual	A, C and E.
(3) A(n) DOT awarding official	A, D and E.

§ 32.110 Are any of my Federal assistance awards exempt from this part?

This part does not apply to any award that the Secretary of Transportation determines that the application of this part would be inconsistent with the international obligations of the United States or the laws or regulations of a foreign government.

§ 32.115 Does this part affect the Federal contracts that I receive?

It will affect future contract awards indirectly if you are debarred or suspended for a violation of the requirements of this part, as described in § 32.510(c). However, this part does not apply directly to procurement contracts. The portion of the Drug-Free Workplace Act of 1988 that applies to Federal procurement contracts is carried out through the Federal Acquisition Regulation in chapter 1 of Title 48 of the Code of Federal Regulations (the drug-free workplace coverage currently is in 48 CFR part 23, subpart 23.5).

Subpart B—Requirements for Recipients Other Than Individuals

§ 32.200 What must I do to comply with this part?

There are two general requirements if you are a recipient other than an individual.

(a) First, you must make a good faith effort, on a continuing basis, to maintain a drug-free workplace. You must agree to do so as a condition for receiving any award covered by this part. The specific measures that you must take in this regard are described in more detail in subsequent sections of this subpart. Briefly, those measures are to—

(1) Publish a drug-free workplace statement and establish a drug-free awareness program for your employees (see §§ 32.205 through 32.220); and

(2) Take actions concerning employees who are convicted of violating drug statutes in the workplace (see § 32.225).

(b) Second, you must identify all known workplaces under your Federal awards (see § 32.230).

§ 32.205 What must I include in my drug-free workplace statement?

You must publish a statement that—

(a) Tells your employees that the unlawful manufacture, distribution, dispensing, possession, or use of a controlled substance is prohibited in your workplace;

(b) Specifies the actions that you will take against employees for violating that prohibition; and

(c) Lets each employee know that, as a condition of employment under any award, he or she:

(1) Will abide by the terms of the statement; and

(2) Must notify you in writing if he or she is convicted for a violation of a criminal drug statute occurring in the workplace and must do so no more than five calendar days after the conviction.

§ 32.210 To whom must I distribute my drug-free workplace statement?

You must require that a copy of the statement described in § 32.205 be given to each employee who will be engaged in the performance of any Federal award.

§ 32.215 What must I include in my drug-free awareness program?

You must establish an ongoing drug-free awareness program to inform employees about—

(a) The dangers of drug abuse in the workplace;

(b) Your policy of maintaining a drug-free workplace;

(c) Any available drug counseling, rehabilitation, and employee assistance programs; and

(d) The penalties that you may impose upon them for drug abuse violations occurring in the workplace.

§ 32.220 By when must I publish my drug-free workplace statement and establish my drug-free awareness program?

If you are a new recipient that does not already have a policy statement as described in § 32.205 and an ongoing awareness program as described in § 32.215, you must publish the statement and establish the program by the time given in the following table:

If . . .	then you . . .
(a) The performance period of the award is less than 30 days.	must have the policy statement and program in place as soon as possible, but before the date on which performance is expected to be completed.
(b) The performance period of the award is 30 days or more.	must have the policy statement and program in place within 30 days after award.

If . . .	then you . . .
(c) You believe there are extraordinary circumstances that will require more than 30 days for you to publish the policy statement and establish the awareness program.	may ask the DOT awarding official to give you more time to do so. The amount of additional time, if any, to be given is at the discretion of the awarding official.

§ 32.225 What actions must I take concerning employees who are convicted of drug violations in the workplace?

There are two actions you must take if an employee is convicted of a drug violation in the workplace:

(a) First, you must notify Federal agencies if an employee who is engaged in the performance of an award informs you about a conviction, as required by § 32.205(c)(2), or you otherwise learn of the conviction. Your notification to the Federal agencies must__

(1) Be in writing;

(2) Include the employee's position title;

(3) Include the identification number(s) of each affected award;

(4) Be sent within ten calendar days after you learn of the conviction; and

(5) Be sent to every Federal agency on whose award the convicted employee was working. It must be sent to every awarding official or his or her official designee, unless the Federal agency has specified a central point for the receipt of the notices.

(b) Second, within 30 calendar days of learning about an employee's conviction, you must either__

(1) Take appropriate personnel action against the employee, up to and including termination, consistent with the requirements of the Rehabilitation Act of 1973 (29 U.S.C. 794), as amended; or

(2) Require the employee to participate satisfactorily in a drug abuse assistance or rehabilitation program approved for these purposes by a Federal, State or local health, law enforcement, or other appropriate agency.

§ 32.230 How and when must I identify workplaces?

(a) You must identify all known workplaces under each DOT award. A failure to do so is a violation of your drug-free workplace requirements. You may identify the workplaces__

(1) To the DOT official that is making the award, either at the time of application or upon award; or

(2) In documents that you keep on file in your offices during the performance of the award, in which case you must make the information available for inspection upon request by DOT officials or their designated representatives.

(b) Your workplace identification for an award must include the actual address of buildings (or parts of buildings) or other sites where work under the award takes place. Categorical descriptions may be used (*e.g.*, all vehicles of a mass transit authority or State highway department while in operation, State employees in each local unemployment office, performers in concert halls or radio studios).

(c) If you identified workplaces to the DOT awarding official at the time of application or award, as described in paragraph (a)(1) of this section, and any workplace that you identified changes during the performance of the award, you must inform the DOT awarding official.

Subpart C—Requirements for Recipients Who Are Individuals

§ 32.300 What must I do to comply with this part if I am an individual recipient?

As a condition of receiving a(n) DOT award, if you are an individual recipient, you must agree that—

(a) You will not engage in the unlawful manufacture, distribution, dispensing, possession, or use of a controlled substance in conducting any activity related to the award; and

(b) If you are convicted of a criminal drug offense resulting from a violation occurring during the conduct of any award activity, you will report the conviction:

(1) In writing.

(2) Within 10 calendar days of the conviction.

(3) To the DOT awarding official or other designee for each award that you currently have, unless § 32.301 or the award document designates a central point for the receipt of the notices. When notice is made to a central point,

it must include the identification number(s) of each affected award.

§ 32.301 [Reserved]

Subpart D—Responsibilities of DOT Awarding Officials

§ 32.400 What are my responsibilities as a(n) DOT awarding official?

As a(n) DOT awarding official, you must obtain each recipient's agreement, as a condition of the award, to comply with the requirements in—

(a) Subpart B of this part, if the recipient is not an individual; or

(b) Subpart C of this part, if the recipient is an individual.

Subpart E—Violations of this Part and Consequences

§ 32.500 How are violations of this part determined for recipients other than individuals?

A recipient other than an individual is in violation of the requirements of this part if the Secretary of Transportation determines, in writing, that—

(a) The recipient has violated the requirements of subpart B of this part; or

(b) The number of convictions of the recipient's employees for violating criminal drug statutes in the workplace is large enough to indicate that the recipient has failed to make a good faith effort to provide a drug-free workplace.

§ 32.505 How are violations of this part determined for recipients who are individuals?

An individual recipient is in violation of the requirements of this part if the Secretary of Transportation determines, in writing, that—

(a) The recipient has violated the requirements of subpart C of this part; or

(b) The recipient is convicted of a criminal drug offense resulting from a violation occurring during the conduct of any award activity.

§ 32.510 What actions will the Federal Government take against a recipient determined to have violated this part?

If a recipient is determined to have violated this part, as described in § 32.500 or § 32.505, the Department of Transportation may take one or more of the following actions—

(a) Suspension of payments under the award;

(b) Suspension or termination of the award; and

(c) Suspension or debarment of the recipient under 49 CFR part 29, for a period not to exceed five years.

§ 32.515 Are there any exceptions to those actions?

The Secretary of Transportation may waive with respect to a particular award, in writing, a suspension of payments under an award, suspension or termination of an award, or suspension or debarment of a recipient if the Secretary of Transportation determines that such a waiver would be in the public interest. This exception authority cannot be delegated to any other official.

Subpart F—Definitions

§ 32.605 Award.

Award means an award of financial assistance by the Department of Transportation or other Federal agency directly to a recipient.

(a) The term award includes:

(1) A Federal grant or cooperative agreement, in the form of money or property in lieu of money.

(2) A block grant or a grant in an entitlement program, whether or not the grant is exempted from coverage under the Governmentwide rule 49 CFR part 18 that implements OMB Circular A–102 (for availability, see 5 CFR 1310.3) and specifies uniform administrative requirements.

(b) The term award does not include:

(1) Technical assistance that provides services instead of money.

(2) Loans.

(3) Loan guarantees.

(4) Interest subsidies.

(5) Insurance.

(6) Direct appropriations.

(7) Veterans' benefits to individuals (*i.e.*, any benefit to veterans, their families, or survivors by virtue of the service of a veteran in the Armed Forces of the United States).

§ 32.610 Controlled substance.

Controlled substance means a controlled substance in schedules I through V of the Controlled Substances Act (21 U.S.C. 812), and as further defined by regulation at 21 CFR 1308.11 through 1308.15.

§ 32.615 Conviction.

Conviction means a finding of guilt (including a plea of nolo contendere) or imposition of sentence, or both, by any judicial body charged with the responsibility to determine violations of the Federal or State criminal drug statutes.

§ 32.620 Cooperative agreement.

Cooperative agreement means an award of financial assistance that, consistent with 31 U.S.C. 6305, is used to enter into the same kind of relationship as a grant (see definition of grant in § 32.650), except that substantial involvement is expected between the Federal agency and the recipient when carrying out the activity contemplated by the award. The term does not include cooperative research and development agreements as defined in 15 U.S.C. 3710a.

§ 32.625 Criminal drug statute.

Criminal drug statute means a Federal or non-Federal criminal statute involving the manufacture, distribution, dispensing, use, or possession of any controlled substance.

§ 32.630 Debarment.

Debarment means an action taken by a Federal agency to prohibit a recipient from participating in Federal Government procurement contracts and covered nonprocurement transactions. A recipient so prohibited is debarred, in accordance with the Federal Acquisition Regulation for procurement contracts (48 CFR part 9, subpart 9.4) and the common rule, Government-wide Debarment and Suspension (Nonprocurement), that implements Executive Order 12549 and Executive Order 12689.

§ 32.635 Drug-free workplace.

Drug-free workplace means a site for the performance of work done in connection with a specific award at which employees of the recipient are prohibited from engaging in the unlawful manufacture, distribution, dispensing, possession, or use of a controlled substance.

§ 32.640 Employee.

(a) *Employee* means the employee of a recipient directly engaged in the performance of work under the award, including—

(1) All direct charge employees;

(2) All indirect charge employees, unless their impact or involvement in the performance of work under the award is insignificant to the performance of the award; and

(3) Temporary personnel and consultants who are directly engaged in the performance of work under the award and who are on the recipient's payroll.

(b) This definition does not include workers not on the payroll of the recipient (*e.g.*, volunteers, even if used to meet a matching requirement; consultants or independent contractors not on the payroll; or employees of subrecipients or subcontractors in covered workplaces).

§ 32.645 Federal agency or agency.

Federal agency or agency means any United States executive department, military department, government corporation, government controlled corporation, any other establishment in the executive branch (including the Executive Office of the President), or any independent regulatory agency.

§ 32.650 Grant.

Grant means an award of financial assistance that, consistent with 31 U.S.C. 6304, is used to enter into a relationship—

(a) The principal purpose of which is to transfer a thing of value to the recipient to carry out a public purpose of support or stimulation authorized by a law of the United States, rather than to acquire property or services for the Federal Government's direct benefit or use; and

(b) In which substantial involvement is not expected between the Federal agency and the recipient when carrying out the activity contemplated by the award.

§ 32.655 Individual.

Individual means a natural person.

§ 32.660 Recipient.

Recipient means any individual, corporation, partnership, association, unit of government (except a Federal agency) or legal entity, however organized, that receives an award directly from a Federal agency.

§ 32.665 State.

State means any of the States of the United States, the District of Columbia, the Commonwealth of Puerto Rico, or any territory or possession of the United States.

§ 32.670 Suspension.

Suspension means an action taken by a Federal agency that immediately prohibits a recipient from participating in Federal Government procurement contracts and covered nonprocurement transactions for a temporary period, pending completion of an investigation and any judicial or administrative proceedings that may ensue. A recipient so prohibited is suspended, in accordance with the Federal Acquisition Regulation for procurement contracts (48 CFR part 9, subpart 9.4) and the common rule, Governmentwide Debarment and Suspension (Nonprocurement), that implements Executive Order 12549 and Executive Order 12689. Suspension of a recipient is a distinct and separate action from suspension of an award or suspension of payments under an award.

PART 37—TRANSPORTATION SERVICES FOR INDIVIDUALS WITH DISABILITIES (ADA)

Subpart A—General

Sec.
37.1 Purpose.
37.3 Definitions.
37.5 Nondiscrimination.
37.7 Standards for accessible vehicles.
37.9 Standards for accessible transportation facilities.
37.11 Administrative enforcement.
37.13 Effective date for certain vehicle specifications.
37.15 Temporary suspension of certain detectable warning requirements.
37.16–37.19 [Reserved]

Subpart B—Applicability

37.21 Applicability: General.
37.23 Service under contract.
37.25 University transportation systems.
37.27 Transportation for elementary and secondary education systems.
37.29 Private entities providing taxi service.
37.31 Vanpools.
37.33 Airport transportation systems.
37.35 Supplemental service for other transportation modes.
37.37 Other applications.
37.39 [Reserved]

Subpart C—Transportation Facilities

37.41 Construction of transportation facilities by public entities.
37.43 Alteration of transportation facilities by public entities.
37.45 Construction and alteration of transportation facilities by private entities.
37.47 Key stations in light and rapid rail systems.
37.49 Designation of responsible person(s) for intercity and commuter rail stations.
37.51 Key stations in commuter rail systems.
37.53 Exception for New York and Philadelphia.
37.55 Intercity rail station accessibility.
37.57 Required cooperation.
37.59 Differences in accessibility completion dates.
37.61 Public transportation programs and activities in existing facilities.
37.63–37.69 [Reserved]

Subpart D—Acquisition of Accessible Vehicles by Public Entities

37.71 Purchase or lease of new non-rail vehicles by public entities operating fixed route systems.
37.73 Purchase or lease of used non-rail vehicles by public entities operating fixed route systems.
37.75 Remanufacture of non-rail vehicles and purchase or lease of remanufactured non-rail vehicles by public entities operating fixed route systems.
37.77 Purchase or lease of new non-rail vehicles by public entities operating a demand responsive system for the general public.
37.79 Purchase or lease of new rail vehicles by public entities operating rapid or light rail systems.
37.81 Purchase or lease of used rail vehicles by public entities operating rapid or light rail systems.
37.83 Remanufacture of rail vehicles and purchase or lease of remanufactured rail vehicles by public entities operating rapid or light rail systems.
37.85 Purchase or lease of new intercity and commuter rail cars.

37.87 Purchase or lease of used intercity and commuter rail cars.
37.89 Remanufacture of intercity and commuter rail cars and purchase or lease of remanufactured intercity and commuter rail cars.
37.91 Wheelchair locations and food service on intercity rail trains.
37.93 One car per train rule.
37.95 Ferries and other passenger vessels operated by public entities. [Reserved]
37.97–37.99 [Reserved]

Subpart E—Acquisition of Accessible Vehicles by Private Entities

37.101 Purchase or lease of vehicles by private entities not primarily engaged in the business of transporting people.
37.103 Purchase or lease of new non-rail vehicles by private entities primarily engaged in the business of transporting people.
37.105 Equivalent service standard.
37.107 Acquisition of passenger rail cars by private entities primarily engaged in the business of transporting people.
37.109 Ferries and other passenger vessels operated by private entities. [Reserved]
37.111–37.119 [Reserved]

Subpart F—Paratransit as a Complement to Fixed Route Service

37.121 Requirement for comparable complementary paratransit service.
37.123 ADA paratransit eligibility: Standards.
37.125 ADA paratransit eligibility: Process.
37.127 Complementary paratransit service for visitors.
37.129 Types of service.
37.131 Service criteria for complementary paratransit.
37.133 Subscription service.
37.135 Submission of paratransit plan.
37.137 Paratransit plan development.
37.139 Plan contents.
37.141 Requirements for a joint paratransit plan.
37.143 Paratransit plan implementation.
37.145 State comment on plans.
37.147 Considerations during FTA review.
37.149 Disapproved plans.
37.151 Waiver for undue financial burden.
37.153 FTA waiver determination.
37.155 Factors in decision to grant an undue financial burden waiver.
37.157–37.159 [Reserved]

Subpart G—Provision of Service

37.161 Maintenance of accessible features: General.
37.163 Keeping vehicle lifts in operative condition: Public entities.
37.165 Lift and securement use.
37.167 Other service requirements.
37.169 Interim requirements for over-the-road bus service operated by private entities.
37.171 Equivalency requirement for demand responsive service operated by private entities not primarily engaged in the business of transporting people.
37.173 Training requirements.

Subpart H—Over-the-Road Buses (OTRBs)

37.181 Applicability dates.
37.183 Purchase or lease of new OTRBs by operators of fixed-route systems.
37.185 Fleet accessibility requirement for OTRB fixed-route systems of large operators.
37.187 Interline service.
37.189 Service requirement for OTRB demand-responsive systems.
37.191 Special provision for small mixed-service operators.
37.193 Interim service requirements.
37.195 Purchase or lease of OTRBs by private entities not primarily in the business of transporting people.
37.197 Remanufactured OTRBs.
37.199 [Reserved]
37.201 Intermediate and rest stops.
37.203 Lift maintenance.
37.205 Additional passengers who use wheelchairs.
37.207 Discriminatory practices.
37.209 Training and other requirements.
37.211 Effect of NHTSA and FHWA safety rules.
37.213 Information collection requirements.
37.215 Review of requirements.

APPENDIX A TO SUBPART H OF PART 37—SERVICE REQUEST FORM
APPENDIX A TO PART 37—MODIFICATIONS TO STANDARDS FOR ACCESSIBLE TRANSPORTATION FACILITIES
APPENDIX B TO PART 37—FTA REGIONAL OFFICES
APPENDIX C TO PART 37—CERTIFICATIONS
APPENDIX D TO PART 37—CONSTRUCTION AND INTERPRETATION OF PROVISIONS OF 49 CFR PART 37

AUTHORITY: 42 U.S.C. 12101–12213; 49 U.S.C. 322.

SOURCE: 56 FR 45621, Sept. 6, 1991, unless otherwise noted.

Subpart A—General

§ 37.1 Purpose.

The purpose of this part is to implement the transportation and related provisions of titles II and III of the Americans with Disabilities Act of 1990.

§ 37.3 Definitions.

As used in this part:

Accessible means, with respect to vehicles and facilities, complying with the accessibility requirements of parts 37 and 38 of this title.

The Act or *ADA* means the Americans with Disabilities Act of 1990 (Pub. L. 101–336, 104 Stat. 327, 42 U.S.C. 12101–12213 and 47 U.S.C. 225 and 611), as it may be amended from time to time.

Administrator means Administrator of the Federal Transit Administration, or his or her designee.

Alteration means a change to an existing facility, including, but not limited to, remodeling, renovation, rehabilitation, reconstruction, historic restoration, changes or rearrangement in structural parts or elements, and changes or rearrangement in the plan configuration of walls and full-height partitions. Normal maintenance, reroofing, painting or wallpapering, asbestos removal, or changes to mechanical or electrical systems are not alterations unless they affect the usability of the building or facility.

Automated guideway transit system or *AGT* means a fixed-guideway transit system which operates with automated (driverless) individual vehicles or multi-car trains. Service may be on a fixed schedule or in response to a passenger-activated call button.

Auxiliary aids and services includes:

(1) Qualified interpreters, notetakers, transcription services, written materials, telephone headset amplifiers, assistive listening devices, assistive listening systems, telephones compatible with hearing aids, closed caption decoders, closed and open captioning, text telephones (also known as telephone devices for the deaf, or TDDs), videotext displays, or other effective methods of making aurally delivered materials available to individuals with hearing impairments;

(2) Qualified readers, taped texts, audio recordings, Brailled materials, large print materials, or other effective methods of making visually delivered materials available to individuals with visual impairments;

(3) Acquisition or modification of equipment or devices; or

(4) Other similar services or actions.

Bus means any of several types of self-propelled vehicles, generally rubber-tired, intended for use on city streets, highways, and busways, including but not limited to minibuses, forty- and thirty-foot buses, articulated buses, double-deck buses, and electrically powered trolley buses, used by public entities to provide designated public transportation service and by private entities to provide transportation service including, but not limited to, specified public transportation services. Self-propelled, rubber-tired vehicles designed to look like antique or vintage trolleys are considered buses.

Commerce means travel, trade, transportation, or communication among the several states, between any foreign country or any territory or possession and any state, or between points in the same state but through another state or foreign country.

Commuter authority means any state, local, regional authority, corporation, or other entity established for purposes of providing commuter rail transportation (including, but not necessarily limited to, the New York Metropolitan Transportation Authority, the Connecticut Department of Transportation, the Maryland Department of Transportation, the Southeastern Pennsylvania Transportation Authority, the New Jersey Transit Corporation, the Massachusetts Bay Transportation Authority, the Port Authority Trans-Hudson Corporation, and any successor agencies) and any entity created by one or more such agencies for the purposes of operating, or contracting for the operation of, commuter rail transportation.

Commuter bus service means fixed route bus service, characterized by service predominantly in one direction during peak periods, limited stops, use of multi-ride tickets, and routes of extended length, usually between the central business district and outlying suburbs. Commuter bus service may also include other service, characterized by a limited route structure, limited stops, and a coordinated relationship to another mode of transportation.

Commuter rail car means a rail passenger car obtained by a commuter authority for use in commuter rail transportation.

Commuter rail transportation means short-haul rail passenger service operating in metropolitan and suburban areas, whether within or across the geographical boundaries of a state, usually characterized by reduced fare, multiple ride, and commutation tickets and by morning and evening peak period operations. This term does not include light or rapid rail transportation.

Demand responsive system means any system of transporting individuals, including the provision of designated public transportation service by public entities and the provision of transportation service by private entities, including but not limited to specified public transportation service, which is not a fixed route system.

Designated public transportation means transportation provided by a public entity (other than public school transportation) by bus, rail, or other conveyance (other than transportation by aircraft or intercity or commuter rail transportation) that provides the general public with general or special service, including charter service, on a regular and continuing basis.

Disability means, with respect to an individual, a physical or mental impairment that substantially limits one or more of the major life activities of such individual; a record of such an impairment; or being regarded as having such an impairment.

(1) The phrase *physical or mental impairment* means—

(i) Any physiological disorder or condition, cosmetic disfigurement, or anatomical loss affecting one or more of the following body systems: neurological, musculoskeletal, special sense organs, respiratory including speech organs, cardiovascular, reproductive, digestive, genito-urinary, hemic and lymphatic, skin, and endocrine;

(ii) Any mental or psychological disorder, such as mental retardation, organic brain syndrome, emotional or mental illness, and specific learning disabilities;

(iii) The term *physical or mental impairment* includes, but is not limited to, such contagious or noncontagious diseases and conditions as orthopedic, visual, speech, and hearing impairments; cerebral palsy, epilepsy, muscular dystrophy, multiple sclerosis, cancer, heart disease, diabetes, mental retardation, emotional illness, specific learning disabilities, HIV disease, tuberculosis, drug addiction and alcoholism;

(iv) The phrase *physical or mental impairment* does not include homosexuality or bisexuality.

(2) The phrase *major life activities* means functions such as caring for one's self, performing manual tasks, walking, seeing, hearing, speaking, breathing, learning, and work.

(3) The phrase *has a record of such an impairment* means has a history of, or has been misclassified as having, a mental or physical impairment that substantially limits one or more major life activities.

(4) The phrase *is regarded as having such an impairment* means—

(i) Has a physical or mental impairment that does not substantially limit major life activities, but which is treated by a public or private entity as constituting such a limitation;

(ii) Has a physical or mental impairment that substantially limits a major life activity only as a result of the attitudes of others toward such an impairment; or

(iii) Has none of the impairments defined in paragraph (1) of this definition but is treated by a public or private entity as having such an impairment.

(5) The term *disability* does not include—

(i) Transvestism, transsexualism, pedophilia, exhibitionism, voyeurism, gender identity disorders not resulting from physical impairments, or other sexual behavior disorders;

(ii) Compulsive gambling, kleptomania, or pyromania;

(iii) Psychoactive substance abuse disorders resulting from the current illegal use of drugs.

Facility means all or any portion of buildings, structures, sites, complexes, equipment, roads, walks, passageways, parking lots, or other real or personal property, including the site where the building, property, structure, or equipment is located.

Fixed route system means a system of transporting individuals (other than by aircraft), including the provision of designated public transportation service by public entities and the provision of transportation service by private entities, including, but not limited to, specified public transportation service, on which a vehicle is operated along a prescribed route according to a fixed schedule.

FT Act means the Federal Transit Act of 1964, as amended (49 U.S.C. App. 1601 *et seq.*).

High speed rail means a rail service having the characteristics of intercity rail service which operates primarily on a dedicated guideway or track not used, for the most part, by freight, including, but not limited to, trains on welded rail, magnetically levitated (maglev) vehicles on a special guideway, or other advanced technology vehicles, designed to travel at speeds in excess of those possible on other types of railroads.

Individual with a disability means a person who has a disability, but does not include an individual who is currently engaging in the illegal use of drugs, when a public or private entity acts on the basis of such use.

Intercity rail passenger car means a rail car, intended for use by revenue passengers, obtained by the National Railroad Passenger Corporation (Amtrak) for use in intercity rail transportation.

Intercity rail transportation means transportation provided by Amtrak.

Light rail means a streetcar-type vehicle operated on city streets, semi-exclusive rights of way, or exclusive rights of way. Service may be provided by step-entry vehicles or by level boarding.

New vehicle means a vehicle which is offered for sale or lease after manufacture without any prior use.

Operates includes, with respect to a fixed route or demand responsive system, the provision of transportation service by a public or private entity itself or by a person under a contractual or other arrangement or relationship with the entity.

Over-the-road bus means a bus characterized by an elevated passenger deck located over a baggage compartment.

Paratransit means comparable transportation service required by the ADA for individuals with disabilities who are unable to use fixed route transportation systems.

Private entity means any entity other than a public entity.

Public entity means:

(1) Any state or local government;

(2) Any department, agency, special purpose district, or other instrumentality of one or more state or local governments; and

(3) The National Railroad Passenger Corporation (Amtrak) and any commuter authority.

Purchase or lease, with respect to vehicles, means the time at which an entity is legally obligated to obtain the vehicles, such as the time of contract execution.

Public school transportation means transportation by schoolbus vehicles of schoolchildren, personnel, and equipment to and from a public elementary or secondary school and school-related activities.

Rapid rail means a subway-type transit vehicle railway operated on exclusive private rights of way with high level platform stations. Rapid rail also may operate on elevated or at grade level track separated from other traffic.

Remanufactured vehicle means a vehicle which has been structurally restored and has had new or rebuilt major components installed to extend its service life.

Secretary means the Secretary of Transportation or his/her designee.

Section 504 means section 504 of the Rehabilitation Act of 1973 (Pub. L. 93–112, 87 Stat. 394, 29 U.S.C. 794), as amended.

Service animal means any guide dog, signal dog, or other animal individually trained to work or perform tasks for an individual with a disability, including, but not limited to, guiding individuals with impaired vision, alerting individuals with impaired hearing to intruders or sounds, providing minimal protection or rescue work, pulling a wheelchair, or fetching dropped items.

Small operator means, in the context of over-the-road buses (OTRBs), a private entity primarily in the business of

transporting people that is not a Class I motor carrier. To determine whether an operator has sufficient average annual gross transportation operating revenues to be a Class I motor carrier, its revenues are combined with those of any other OTRB operator with which it is affiliated.

Solicitation means the closing date for the submission of bids or offers in a procurement.

Specified public transportation means transportation by bus, rail, or any other conveyance (other than aircraft) provided by a private entity to the general public, with general or special service (including charter service) on a regular and continuing basis.

Station means, with respect to intercity and commuter rail transportation, the portion of a property located appurtenant to a right of way on which intercity or commuter rail transportation is operated, where such portion is used by the general public and is related to the provision of such transportation, including passenger platforms, designated waiting areas, restrooms, and, where a public entity providing rail transportation owns the property, concession areas, to the extent that such public entity exercises control over the selection, design, construction, or alteration of the property, but this term does not include flag stops (i.e., stations which are not regularly scheduled stops but at which trains will stop to board or detrain passengers only on signal or advance notice).

Transit facility means, for purposes of determining the number of text telephones needed consistent with section 10.3.1(12) of appendix A to this part, a physical structure the primary function of which is to facilitate access to and from a transportation system which has scheduled stops at the structure. The term does not include an open structure or a physical structure the primary purpose of which is other than providing transportation services.

Used vehicle means a vehicle with prior use.

Vanpool means a voluntary commuter ridesharing arrangement, using vans with a seating capacity greater than 7 persons (including the driver) or buses, which provides transportation to a group of individuals traveling directly from their homes to their regular places of work within the same geographical area, and in which the commuter/driver does not receive compensation beyond reimbursement for his or her costs of providing the service.

Vehicle, as the term is applied to private entities, does not include a rail passenger car, railroad locomotive, railroad freight car, or railroad caboose, or other rail rolling stock described in section 242 of title III of the Act.

Wheelchair means a mobility aid belonging to any class of three or four-wheeled devices, usable indoors, designed for and used by individuals with mobility impairments, whether operated manually or powered. A ''common wheelchair'' is such a device which does not exceed 30 inches in width and 48 inches in length measured two inches above the ground, and does not weigh more than 600 pounds when occupied.

[56 FR 45621, Sept. 6, 1991, as amended at 58 FR 63101, Nov. 30, 1993; 61 FR 25415, May 21, 1996; 63 FR 51690, Sept. 28, 1998]

§ 37.5 Nondiscrimination.

(a) No entity shall discriminate against an individual with a disability in connection with the provision of transportation service.

(b) Notwithstanding the provision of any special transportation service to individuals with disabilities, an entity shall not, on the basis of disability, deny to any individual with a disability the opportunity to use the entity's transportation service for the general public, if the individual is capable of using that service.

(c) An entity shall not require an individual with a disability to use designated priority seats, if the individual does not choose to use these seats.

(d) An entity shall not impose special charges, not authorized by this part, on individuals with disabilities, including individuals who use wheelchairs, for providing services required by this part or otherwise necessary to accommodate them.

(e) An entity shall not require that an individual with disabilities be accompanied by an attendant.

(f) Private entities that are primarily engaged in the business of transporting people and whose operations affect commerce shall not discriminate against any individual on the basis of disability in the full and equal enjoyment of specified transportation services. This obligation includes, with respect to the provision of transportation services, compliance with the requirements of the rules of the Department of Justice concerning eligibility criteria, making reasonable modifications, providing auxiliary aids and services, and removing barriers (28 CFR 36.301–36.306).

(g) An entity shall not refuse to serve an individual with a disability or require anything contrary to this part because its insurance company conditions coverage or rates on the absence of individuals with disabilities or requirements contrary to this part.

(h) It is not discrimination under this part for an entity to refuse to provide service to an individual with disabilities because that individual engages in violent, seriously disruptive, or illegal conduct. However, an entity shall not refuse to provide service to an individual with disabilities solely because the individual's disability results in appearance or involuntary behavior that may offend, annoy, or inconvenience employees of the entity or other persons.

§ 37.7 Standards for accessible vehicles.

(a) For purposes of this part, a vehicle shall be considered to be readily accessible to and usable by individuals with disabilities if it meets the requirements of this part and the standards set forth in part 38 of this title.

(b)(1) For purposes of implementing the equivalent facilitation provision in § 38.2 of this subtitle, the following parties may submit to the Administrator of the applicable operating administration a request for a determination of equivalent facilitation:

(i) A public or private entity that provides transportation services and is subject to the provisions of subpart D or subpart E this part; or

(ii) The manufacturer of a vehicle or a vehicle component or subsystem to be used by such entity to comply with this part.

(2) The requesting party shall provide the following information with its request:

(i) Entity name, address, contact person and telephone;

(ii) Specific provision of part 38 of this title concerning which the entity is seeking a determination of equivalent facilitation.

(iii) [Reserved]

(iv) Alternative method of compliance, with demonstration of how the alternative meets or exceeds the level of accessibility or usability of the vehicle provided in part 38 of this subtitle; and

(v) Documentation of the public participation used in developing an alternative method of compliance.

(3) In the case of a request by a public entity that provides transportation services subject to the provisions of subpart D of this part, the required public participation shall include the following:

(i) The entity shall contact individuals with disabilities and groups representing them in the community. Consultation with these individuals and groups shall take place at all stages of the development of the request for equivalent facilitation. All documents and other information concerning the request shall be available, upon request, to members of the public.

(ii) The entity shall make its proposed request available for public comment before the request is made final or transmitted to DOT. In making the request available for public review, the entity shall ensure that it is available, upon request, in accessible formats.

(iii) The entity shall sponsor at least one public hearing on the request and shall provide adequate notice of the hearing, including advertisement in appropriate media, such as newspapers of general and special interest circulation and radio announcements.

(4) In the case of a request by a private entity that provides transportation services subject to the provisions of subpart E of this part or a manufacturer, the private entity or manufacturer shall consult, in person, in writing, or by other appropriate

means, with representatives of national and local organizations representing people with those disabilities who would be affected by the request.

(5) A determination of compliance will be made by the Administrator of the concerned operating administration on a case-by-case basis, with the concurrence of the Assistant Secretary for Policy and International Affairs.

(6) Determinations of equivalent facilitation are made only with respect to vehicles or vehicle components used in the provision of transportation services covered by subpart D or subpart E of this part, and pertain only to the specific situation concerning which the determination is made. Entities shall not cite these determinations as indicating that a product or method constitute equivalent facilitations in situations other than those to which the determinations specifically pertain. Entities shall not claim that a determination of equivalent facilitation indicates approval or endorsement of any product or method by the Federal government, the Department of Transportation, or any of its operating administrations.

(c) Over-the-road buses acquired by public entities (or by a contractor to a public entity as provided in §37.23 of this part) shall comply with §38.23 and subpart G of part 38 of this title.

[56 FR 45621, Sept. 6, 1991, as amended at 58 FR 63101, Nov. 30, 1993; 61 FR 25416, May 21, 1996]

§37.9 Standards for accessible transportation facilities.

(a) For purposes of this part, a transportation facility shall be considered to be readily accessible to and usable by individuals with disabilities if it meets the requirements of this part and the requirements set forth in Appendices B and D to 36 CFR part 1191, which apply to buildings and facilities covered by the Americans with Disabilities Act, as modified by Appendix A to this part.

(b) Facility alterations begun before January 26, 1992, in a good faith effort to make a facility accessible to individuals with disabilities may be used to meet the key station requirements set forth in §§37.47 and 37.51 of this part, even if these alterations are not consistent with the requirements set forth in Appendices B and D to 36 CFR part 1191 and Appendix A to this part, if the modifications complied with the Uniform Federal Accessibility Standards (UFAS) or ANSI A117.1(1980) (American National Standards Specification for Making Buildings and Facilities Accessible to and Usable by the Physically Handicapped). This paragraph applies only to alterations of individual elements and spaces and only to the extent that provisions covering those elements or spaces are contained in UFAS or ANSI A117.1, as applicable.

(c) (1) New construction or alterations of buildings or facilities on which construction has begun, or all approvals for final design have been received, before November 29, 2006, are not required to be consistent with the requirements set forth in Appendices B and D to 36 CFR part 1191 and Appendix A to this part, if the construction or alterations comply with the former Appendix A to this part, as codified in the October 1, 2006, edition of the Code of Federal Regulations.

(2) Existing buildings and facilities that are not altered after November 29, 2006, and which comply with the former Appendix A to this part, are not required to be retrofitted to comply with the requirements set forth in Appendices B and D to 36 CFR part 1191 and Appendix A to this part.

(d)(1) For purposes of implementing the equivalent facilitation provision in ADA Chapter 1, Section 103, of Appendix B to 36 CFR part 1191, the following parties may submit to the Administrator of the applicable operating administration a request for a determination of equivalent facilitation:

(i)(A) A public or private entity that provides transportation facilities subject to the provisions of subpart C of this part, or other appropriate party with the concurrence of the Administrator.

(B) With respect to airport facilities, an entity that is an airport operator subject to the requirements of 49 CFR part 27 or regulations implementing the Americans with Disabilities Act, an air carrier subject to the requirements of 14 CFR part 382, or other appropriate party with the concurrence of the Administrator.

(ii) The manufacturer of a product or accessibility feature to be used in a transportation facility or facilities.

(2) The requesting party shall provide the following information with its request:

(i) Entity name, address, contact person and telephone;

(ii) Specific provision(s) of Appendices B and D to 36 CFR part 1191 or Appendix A to this part concerning which the entity is seeking a determination of equivalent facilitation.

(iii) [Reserved]

(iv) Alternative method of compliance, with demonstration of how the alternative meets or exceeds the level of accessibility or usability provided in Appendices B and D to 36 CFR part 1191 or Appendix A to this part; and

(v) Documentation of the public participation used in developing an alternative method of compliance.

(3) In the case of a request by a public entity that provides transportation facilities (including an airport operator), or a request by an air carrier with respect to airport facilities, the required public participation shall include the following:

(i) The entity shall contact individuals with disabilities and groups representing them in the community. Consultation with these individuals and groups shall take place at all stages of the development of the request for equivalent facilitation. All documents and other information concerning the request shall be available, upon request, to Department of Transportation officials and members of the public.

(ii) The entity shall make its proposed request available for public comment before the request is made final or transmitted to DOT. In making the request available for public review, the entity shall ensure that it is available, upon request, in accessible formats.

(iii) The entity shall sponsor at least one public hearing on the request and shall provide adequate notice of the hearing, including advertisement in appropriate media, such as newspapers of general and special interest circulation and radio announcements.

(4) In the case of a request by a manufacturer or a private entity other than an air carrier, the manufacturer or private entity shall consult, in person, in writing, or by other appropriate means, with representatives of national and local organizations representing people with those disabilities who would be affected by the request.

(5) A determination of compliance will be made by the Administrator of the concerned operating administration on a case-by-case basis, with the concurrence of the Assistant Secretary for Transportation Policy.

(6)(i) Determinations of equivalent facilitation are made only with respect to transportation facilities, and pertain only to the specific situation concerning which the determination is made. *Provided, however*, that with respect to a product or accessibility feature that the Administrator determines can provide an equivalent facilitation in a class of situations, the Administrator may make an equivalent facilitation determination applying to that class of situations.

(ii) Entities shall not cite these determinations as indicating that a product or method constitutes equivalent facilitation in situations, or classes of situations, other than those to which the determinations specifically pertain.

(iii) Entities shall not claim that a determination of equivalent facilitation indicates approval or endorsement of any product or method by the Federal government, the Department of Transportation, or any of its operating administrations.

[71 FR 63265, Oct. 30, 2006]

§ 37.11 Administrative enforcement.

(a) Recipients of Federal financial assistance from the Department of Transportation are subject to administrative enforcement of the requirements of this part under the provisions of 49 CFR part 27, subpart C.

(b) Public entities, whether or not they receive Federal financial assistance, also are subject to enforcement action as provided by the Department of Justice.

(c) Private entities, whether or not they receive Federal financial assistance, are also subject to enforcement action as provided in the regulations of

the Department of Justice implementing title III of the ADA (28 CFR part 36).

[56 FR 45621, Sept. 6, 1991, as amended at 61 FR 25416, May 21, 1996]

§ 37.13 Effective date for certain vehicle specifications.

(a) The vehicle lift specifications identified in §§ 38.23(b)(6), 38.83(b)(6), 38.95(b)(6), and 38.125(b)(6) of this title apply to solicitations for vehicles under this part after January 25, 1992.

(b) The vehicle door height requirements for vehicles over 22 feet identified in § 38.25(c) of this title apply to solicitations for vehicles under this part after January 25, 1992.

[56 FR 64215, Dec. 9, 1991]

§ 37.15 Temporary suspension of certain detectable warning requirements.

The detectable warning requirements contained in sections 4.7.7, 4.29.5, and 4.29.6 of appendix A to this part are suspended temporarily until July 26, 2001.

[64 FR 64837, 64838, Nov. 23, 1998]

§§ 37.16–37.19 [Reserved]

Subpart B—Applicability

§ 37.21 Applicability: General.

(a) This part applies to the following entities, whether or not they receive Federal financial assistance from the Department of Transportation:

(1) Any public entity that provides designated public transportation or intercity or commuter rail transportation;

(2) Any private entity that provides specified public transportation; and

(3) Any private entity that is not primarily engaged in the business of transporting people but operates a demand responsive or fixed route system.

(b) For entities receiving Federal financial assistance from the Department of Transportation, compliance with applicable requirements of this part is a condition of compliance with section 504 of the Rehabilitation Act of 1973 and of receiving financial assistance.

(c) Entities to which this part applies also may be subject to ADA regulations of the Department of Justice (28 CFR parts 35 or 36, as applicable). The provisions of this part shall be interpreted in a manner that will make them consistent with applicable Department of Justice regulations. In any case of apparent inconsistency, the provisions of this part shall prevail.

§ 37.23 Service under contract.

(a) When a public entity enters into a contractual or other arrangement or relationship with a private entity to operate fixed route or demand responsive service, the public entity shall ensure that the private entity meets the requirements of this part that would apply to the public entity if the public entity itself provided the service.

(b) A private entity which purchases or leases new, used, or remanufactured vehicles, or remanufactures vehicles, for use, or in contemplation of use, in fixed route or demand responsive service under contract or other arrangement or relationship with a public entity, shall acquire accessible vehicles in all situations in which the public entity itself would be required to do so by this part.

(c) A public entity which enters into a contractual or other arrangement or relationship with a private entity to provide fixed route service shall ensure that the percentage of accessible vehicles operated by the public entity in its overall fixed route or demand responsive fleet is not diminished as a result.

(d) A private entity that provides fixed route or demand responsive transportation service under contract or other arrangement with another private entity shall be governed, for purposes of the transportation service involved, by the provisions of this part applicable to the other entity.

§ 37.25 University transportation systems.

(a) Transportation services operated by private institutions of higher education are subject to the provisions of this part governing private entities not primarily engaged in the business of transporting people.

(b) Transportation systems operated by public institutions of higher education are subject to the provisions of this part governing public entities. If a

public institution of higher education operates a fixed route system, the requirements of this part governing commuter bus service apply to that system.

§ 37.27 Transportation for elementary and secondary education systems.

(a) The requirements of this part do not apply to public school transportation.

(b) The requirements of this part do not apply to the transportation of school children to and from a private elementary or secondary school, and its school-related activities, if the school is providing transportation service to students with disabilities equivalent to that provided to students without disabilities. The test of equivalence is the same as that provided in § 37.105. If the school does not meet the requirement of this paragraph for exemption from the requirements of this part, it is subject to the requirements of this part for private entities not primarily engaged in transporting people.

[56 FR 45621, Sept. 6, 1991, as amended at 61 FR 25415, May 21, 1996]

§ 37.29 Private entities providing taxi service.

(a) Providers of taxi service are subject to the requirements of this part for private entities primarily engaged in the business of transporting people which provide demand responsive service.

(b) Providers of taxi service are not required to purchase or lease accessible automobiles. When a provider of taxi service purchases or leases a vehicle other than an automobile, the vehicle is required to be accessible unless the provider demonstrates equivalency as provided in § 37.105 of this part. A provider of taxi service is not required to purchase vehicles other than automobiles in order to have a number of accessible vehicles in its fleet.

(c) Private entities providing taxi service shall not discriminate against individuals with disabilities by actions including, but not limited to, refusing to provide service to individuals with disabilities who can use taxi vehicles, refusing to assist with the stowing of mobility devices, and charging higher fares or fees for carrying individuals with disabilities and their equipment than are charged to other persons.

§ 37.31 Vanpools.

Vanpool systems which are operated by public entities, or in which public entities own or purchase or lease the vehicles, are subject to the requirements of this part for demand responsive service for the general public operated by public entities. A vanpool system in this category is deemed to be providing equivalent service to individuals with disabilities if a vehicle that an individual with disabilities can use is made available to and used by a vanpool in which such an individual chooses to participate.

§ 37.33 Airport transportation systems.

(a) Transportation systems operated by public airport operators, which provide designated public transportation and connect parking lots and terminals or provide transportation among terminals, are subject to the requirements of this part for fixed route or demand responsive systems, as applicable, operated by public entities. Public airports which operate fixed route transportation systems are subject to the requirements of this part for commuter bus service operated by public entities. The provision by an airport of additional accommodations (e.g., parking spaces in a close-in lot) is not a substitute for meeting the requirements of this part.

(b) Fixed-route transportation systems operated by public airport operators between the airport and a limited number of destinations in the area it serves are subject to the provisions of this part for commuter bus systems operated by public entities.

(c) Private jitney or shuttle services that provide transportation between an airport and destinations in the area it serves in a route-deviation or other variable mode are subject to the requirements of this part for private entities primarily engaged in the business of transporting people which provide demand responsive service. They may meet equivalency requirements by such means as sharing or pooling accessible vehicles among operators, in a way that ensures the provision of equivalent service.

§ 37.35 Supplemental service for other transportation modes.

(a) Transportation service provided by bus or other vehicle by an intercity commuter or rail operator, as an extension of or supplement to its rail service, and which connects an intercity rail station and limited other points, is subject to the requirements of this part for fixed route commuter bus service operated by a public entity.

(b) Dedicated bus service to commuter rail systems, with through ticketing arrangements and which is available only to users of the commuter rail system, is subject to the requirements of this part for fixed route commuter bus service operated by a public entity.

§ 37.37 Other applications.

(a) A private entity does not become subject to the requirements of this part for public entities, because it receives an operating subsidy from, is regulated by, or is granted a franchise or permit to operate by a public entity.

(b) Shuttle systems and other transportation services operated by privately-owned hotels, car rental agencies, historical or theme parks, and other public accommodations are subject to the requirements of this part for private entities not primarily engaged in the business of transporting people. Either the requirements for demand responsive or fixed route service may apply, depending upon the characteristics of each individual system of transportation.

(c) Conveyances used by members of the public primarily for recreational purposes rather than for transportation (e.g., amusement park rides, ski lifts, or historic rail cars or trolleys operated in museum settings) are not subject to the requirements of this part. Such conveyances are subject to Department of Justice regulations implementing title II or title III of the ADA (28 CFR part 35 or 36), as applicable.

(d) Transportation services provided by an employer solely for its own employees are not subject to the requirements of this part. Such services are subject to the regulations of the Equal Employment Opportunity Commission under title I of the ADA (29 CFR part 1630) and, with respect to public entities, the regulations of the Department of Justice under title II of the ADA (28 CFR part 35).

(e) Transportation systems operated by private clubs or establishments exempted from coverage under title II of the Civil Rights Act of 1964 (42 U.S.C. 2000–a(e)) or religious organizations or entities controlled by religious organizations are not subject to the requirements of this part.

(f) If a parent private company is not primarily engaged in the business of transporting people, or is not a place of public accommodation, but a subsidiary company or an operationally distinct segment of the company is primarily engaged in the business of transporting people, the transportation service provided by the subsidiary or segment is subject to the requirements of this part for private entities primarily engaged in the business of transporting people.

(g) High-speed rail systems operated by public entities are subject to the requirements of this part governing intercity rail systems.

(h) Private rail systems providing fixed route or specified public transportation service are subject to the requirements of § 37.107 with respect to the acquisition of rail passenger cars. Such systems are subject to the requirements of the regulations of the Department of Justice implementing title III of the ADA (28 CFR part 36) with respect to stations and other facilities.

§ 37.39 [Reserved]

Subpart C—Transportation Facilities

§ 37.41 Construction of transportation facilities by public entities.

(a) A public entity shall construct any new facility to be used in providing designated public transportation services so that the facility is readily accessible to and usable by individuals with disabilities, including individuals who use wheelchairs. This requirement also applies to the construction of a

new station for use in intercity or commuter rail transportation. For purposes of this section, a facility or station is ''new'' if its construction begins (i.e., issuance of notice to proceed) after January 25, 1992, or, in the case of intercity or commuter rail stations, after October 7, 1991.

(b) (1) Full compliance with the requirements of this section is not required where an entity can demonstrate that it is structurally impracticable to meet the requirements. Full compliance will be considered structurally impracticable only in those rare circumstances when the unique characteristics of terrain prevent the incorporation of accessibility features.

(2) If full compliance with this section would be structurally impracticable, compliance with this section is required to the extent that it is not structurally impracticable. In that case, any portion of the facility that can be made accessible shall be made accessible to the extent that it is not structurally impracticable.

(3) If providing accessibility in conformance with this section to individuals with certain disabilities (e.g., those who use wheelchairs) would be structurally impracticable, accessibility shall nonetheless be ensured to persons with other types of disabilities (e.g., those who use crutches or who have sight, hearing, or mental impairments) in accordance with this section.

[56 FR 45621, Sept. 6, 1991, as amended by 71 FR 63266, Oct. 30, 2006]

§ 37.43 Alteration of transportation facilities by public entities.

(a)(1) When a public entity alters an existing facility or a part of an existing facility used in providing designated public transportation services in a way that affects or could affect the usability of the facility or part of the facility, the entity shall make the alterations (or ensure that the alterations are made) in such a manner, to the maximum extent feasible, that the altered portions of the facility are readily accessible to and usable by individuals with disabilities, including individuals who use wheelchairs, upon the completion of such alterations.

(2) When a public entity undertakes an alteration that affects or could affect the usability of or access to an area of a facility containing a primary function, the entity shall make the alteration in such a manner that, to the maximum extent feasible, the path of travel to the altered area and the bathrooms, telephones, and drinking fountains serving the altered area are readily accessible to and usable by individuals with disabilities, including individuals who use wheelchairs, upon completion of the alterations. *Provided,* that alterations to the path of travel, drinking fountains, telephones and bathrooms are not required to be made readily accessible to and usable by individuals with disabilities, including individuals who use wheelchairs, if the cost and scope of doing so would be disproportionate.

(3) The requirements of this paragraph also apply to the alteration of existing intercity or commuter rail stations by the responsible person for, owner of, or person in control of the station.

(4) The requirements of this section apply to any alteration which begins (i.e., issuance of notice to proceed or work order, as applicable) after January 25, 1992, or, in the case of intercity and commuter rail stations, after October 7, 1991.

(b) As used in this section, the phrase *to the maximum extent feasible* applies to the occasional case where the nature of an existing facility makes it impossible to comply fully with applicable accessibility standards through a planned alteration. In these circumstances, the entity shall provide the maximum physical accessibility feasible. Any altered features of the facility or portion of the facility that can be made accessible shall be made accessible. If providing accessibility to certain individuals with disabilities (e.g., those who use wheelchairs) would not be feasible, the facility shall be made accessible to individuals with other types of disabilities (e.g., those who use crutches, those who have impaired vision or hearing, or those who have other impairments).

(c) As used in this section, a *primary function* is a major activity for which the facility is intended. Areas of transportation facilities that involve primary functions include, but are not

necessarily limited to, ticket purchase and collection areas, passenger waiting areas, train or bus platforms, baggage checking and return areas and employment areas (except those involving non-occupiable spaces accessed only by ladders, catwalks, crawl spaces, very narrow passageways, or freight (non-passenger) elevators which are frequented only by repair personnel).

(d) As used in this section, a ''path of travel'' includes a continuous, unobstructed way of pedestrian passage by means of which the altered area may be approached, entered, and exited, and which connects the altered area with an exterior approach (including sidewalks, parking areas, and streets), an entrance to the facility, and other parts of the facility. The term also includes the restrooms, telephones, and drinking fountains serving the altered area. An accessible path of travel may include walks and sidewalks, curb ramps and other interior or exterior pedestrian ramps, clear floor paths through corridors, waiting areas, concourses, and other improved areas, parking access aisles, elevators and lifts, bridges, tunnels, or other passageways between platforms, or a combination of these and other elements.

(e)(1) Alterations made to provide an accessible path of travel to the altered area will be deemed disproportionate to the overall alteration when the cost exceeds 20 percent of the cost of the alteration to the primary function area (without regard to the costs of accessibility modifications).

(2) Costs that may be counted as expenditures required to provide an accessible path of travel include:

(i) Costs associated with providing an accessible entrance and an accessible route to the altered area (e.g., widening doorways and installing ramps);

(ii) Costs associated with making restrooms accessible (e.g., grab bars, enlarged toilet stalls, accessible faucet controls);

(iii) Costs associated with providing accessible telephones (e.g., relocation of phones to an accessible height, installation of amplification devices or TDDs);

(iv) Costs associated with relocating an inaccessible drinking fountain.

(f)(1) When the cost of alterations necessary to make a path of travel to the altered area fully accessible is disproportionate to the cost of the overall alteration, then such areas shall be made accessible to the maximum extent without resulting in disproportionate costs;

(2) In this situation, the public entity should give priority to accessible elements that will provide the greatest access, in the following order:

(i) An accessible entrance;

(ii) An accessible route to the altered area;

(iii) At least one accessible restroom for each sex or a single unisex restroom (where there are one or more restrooms);

(iv) Accessible telephones;

(v) Accessible drinking fountains;

(vi) When possible, other accessible elements (e.g., parking, storage, alarms).

(g) If a public entity performs a series of small alterations to the area served by a single path of travel rather than making the alterations as part of a single undertaking, it shall nonetheless be responsible for providing an accessible path of travel.

(h)(1) If an area containing a primary function has been altered without providing an accessible path of travel to that area, and subsequent alterations of that area, or a different area on the same path of travel, are undertaken within three years of the original alteration, the total cost of alteration to the primary function areas on that path of travel during the preceding three year period shall be considered in determining whether the cost of making that path of travel is disproportionate;

(2) For the first three years after January 26, 1992, only alterations undertaken between that date and the date of the alteration at issue shall be considered in determining if the cost of providing accessible features is disproportionate to the overall cost of the alteration.

(3) Only alterations undertaken after January 26, 1992, shall be considered in determining if the cost of providing an accessible path of travel is disproportionate to the overall cost of the alteration.

§ 37.45 Construction and alteration of transportation facilities by private entities.

In constructing and altering transit facilities, private entities shall comply with the regulations of the Department of Justice implementing Title III of the ADA (28 CFR part 36).

§ 37.47 Key stations in light and rapid rail systems.

(a) Each public entity that provides designated public transportation by means of a light or rapid rail system shall make key stations on its system readily accessible to and usable by individuals with disabilities, including individuals who use wheelchairs. This requirement is separate from and in addition to requirements set forth in § 37.43 of this part.

(b) Each public entity shall determine which stations on its system are key stations. The entity shall identify key stations, using the planning and public participation process set forth in paragraph (d) of this section, and taking into consideration the following criteria:

(1) Stations where passenger boardings exceed average station passenger boardings on the rail system by at least fifteen percent, unless such a station is close to another accessible station;

(2) Transfer stations on a rail line or between rail lines;

(3) Major interchange points with other transportation modes, including stations connecting with major parking facilities, bus terminals, intercity or commuter rail stations, passenger vessel terminals, or airports;

(4) End stations, unless an end station is close to another accessible station; and

(5) Stations serving major activity centers, such as employment or government centers, institutions of higher education, hospitals or other major health care facilities, or other facilities that are major trip generators for individuals with disabilities.

(c)(1) Unless an entity receives an extension under paragraph (c)(2) of this section, the public entity shall achieve accessibility of key stations as soon as possible, but in no case later than July 26, 1993, except that an entity is not required to complete installation of detectable warnings required by section 10.3.2(2) of appendix A to this part until July 26, 1994.

(2) The FTA Administrator may grant an extension of this completion date for key station accessibility for a period up to July 26, 2020, provided that two-thirds of key stations are made accessible by July 26, 2010. Extensions may be granted as provided in paragraph (e) of this section.

(d) The public entity shall develop a plan for compliance for this section. The plan shall be submitted to the appropriate FTA regional office by July 26, 1992. (See appendix B to this part for list.)

(1) The public entity shall consult with individuals with disabilities affected by the plan. The public entity also shall hold at least one public hearing on the plan and solicit comments on it. The plan submitted to FTA shall document this public participation, including summaries of the consultation with individuals with disabilities and the comments received at the hearing and during the comment period. The plan also shall summarize the public entity's responses to the comments and consultation.

(2) The plan shall establish milestones for the achievement of required accessibility of key stations, consistent with the requirements of this section.

(e) A public entity wishing to apply for an extension of the July 26, 1993, deadline for key station accessibility shall include a request for an extension with its plan submitted to FTA under paragraph (d) of this section. Extensions may be granted only with respect to key stations which need extraordinarily expensive structural changes to, or replacement of, existing facilities (e.g., installations of elevators, raising the entire passenger platform, or alterations of similar magnitude and cost). Requests for extensions shall provide for completion of key station accessibility within the time limits set forth in paragraph (c) of this section. The FTA Administrator may approve, approve with conditions, modify, or

disapprove any request for an extension.

[56 FR 45621, Sept. 6, 1991, as amended at 58 FR 63102, Nov. 30, 1993]

§ 37.49 Designation of responsible person(s) for intercity and commuter rail stations.

(a) The responsible person(s) designated in accordance with this section shall bear the legal and financial responsibility for making a key station accessible in the same proportion as determined under this section.

(b) In the case of a station more than fifty percent of which is owned by a public entity, the public entity is the responsible party.

(c) In the case of a station more than fifty percent of which is owned by a private entity the persons providing commuter or intercity rail service to the station are the responsible parties, in a proportion equal to the percentage of all passenger boardings at the station attributable to the service of each, over the entire period during which the station is made accessible.

(d) In the case of a station of which no entity owns more than fifty percent, the owners of the station (other than private entity owners) and persons providing intercity or commuter rail service to the station are the responsible persons.

(1) Half the responsibility for the station shall be assumed by the owner(s) of the station. The owners shall share this responsibility in proportion to their ownership interest in the station, over the period during which the station is made accessible.

(2) The person(s) providing commuter or intercity rail service to the station shall assume the other half of the responsibility. These persons shall share this responsibility. These persons shall share this responsibility for the station in a proportion equal to the percentage of all passenger boardings at the station attributable to the service of each, over the period during which the station is made accessible.

(e) Persons who must share responsibility for station accessibility under paragraphs (c) and (d) of this section may, by agreement, allocate their responsibility in a manner different from that provided in this section.

§ 37.51 Key stations in commuter rail systems.

(a) The responsible person(s) shall make key stations on its system readily accessible to and usable by individuals with disabilities, including individuals who use wheelchairs. This requirement is separate from and in addition to requirements set forth in § 37.43 of this part.

(b) Each commuter authority shall determine which stations on its system are key stations. The commuter authority shall identify key stations, using the planning and public participation process set forth in paragraph (d) of this section, and taking into consideration the following criteria:

(1) Stations where passenger boardings exceed average station passenger boardings on the rail system by at least fifteen percent, unless such a station is close to another accessible station;

(2) Transfer stations on a rail line or between rail lines;

(3) Major interchange points with other transportation modes, including stations connecting with major parking facilities, bus terminals, intercity or commuter rail stations, passenger vessel terminals, or airports;

(4) End stations, unless an end station is close to another accessible station; and

(5) Stations serving major activity centers, such as employment or government centers, institutions of higher education, hospitals or other major health care facilities, or other facilities that are major trip generators for individuals with disabilities.

(c)(1) Except as provided in this paragraph, the responsible person(s) shall achieve accessibility of key stations as soon as possible, but in no case later than July 26, 1993, except that an entity is not required to complete installation of detectable warnings required by section 10.3.2(2) of appendix A to this part until July 26, 1994.

(2) The FTA Administrator may grant an extension of this deadline for key station accessibility for a period up to July 26, 2010. Extensions may be granted as provided in paragraph (e) of this section.

(d) The commuter authority and responsible person(s) for stations involved shall develop a plan for compliance for this section. This plan shall be completed and submitted to F'TA by July 26, 1992.

(1) The commuter authority and responsible person(s) shall consult with individuals with disabilities affected by the plan. The commuter authority and responsible person(s) also shall hold at least one public hearing on the plan and solicit comments on it. The plan shall document this public participation, including summaries of the consultation with individuals with disabilities and the comments received at the hearing and during the comment period. The plan also shall summarize the responsible person(s) responses to the comments and consultation.

(2) The plan shall establish milestones for the achievement of required accessibility of key stations, consistent with the requirements of this section.

(3) The commuter authority and responsible person(s) of each key station identified in the plan shall, by mutual agreement, designate a project manager for the purpose of undertaking the work of making the key station accessible.

(e) Any commuter authority and/or responsible person(s) wishing to apply for an extension of the July 26, 1993, deadline for key station accessibility shall include a request for extension with its plan submitted to under paragraph (d) of this section. Extensions may be granted only in a case where raising the entire passenger platform is the only means available of attaining accessibility or where other extraordinarily expensive structural changes (e.g., installations of elevators, or alterations of magnitude and cost similar to installing an elevator or raising the entire passenger platform) are necessary to attain accessibility. Requests for extensions shall provide for completion of key station accessibility within the time limits set forth in paragraph (c) of this section. The F'TA Administrator may approve, approve with conditions, modify, or disapprove any request for an extension.

[56 FR 45621, Sept. 6, 1991, as amended at 58 FR 63102, Nov. 30, 1993]

§ 37.53 Exception for New York and Philadelphia.

(a) The following agreements entered into in New York, New York, and Philadelphia, Pennsylvania, contain lists of key stations for the public entities that are a party to those agreements for those service lines identified in the agreements. The identification of key stations under these agreements is deemed to be in compliance with the requirements of this Subpart.

(1) Settlement Agreement by and among Eastern Paralyzed Veterans Association, Inc., James J. Peters, Terrance Moakley, and Denise Figueroa, individually and as representatives of the class of all persons similarly situated (collectively, ''the EPVA class representatives''); and Metropolitan Transportation Authority, New York City Transit Authority, and Manhattan and Bronx Surface Transit Operating Authority (October 4, 1984).

(2) Settlement Agreement by and between Eastern Paralyzed Veterans Association of Pennsylvania, Inc., and James J. Peters, individually; and Dudley R. Sykes, as Commissioner of the Philadelphia Department of Public Property, and his successors in office and the City of Philadelphia (collectively ''the City'') and Southeastern Pennsylvania Transportation Authority (June 28, 1989).

(b) To comply with §§ 37.47 (b) and (d) or 37.51 (b) and (d) of this part, the entities named in the agreements are required to use their public participation and planning processes only to develop and submit to the F'TA Administrator plans for timely completion of key station accessibilty, as provided in this subpart.

(c) In making accessible the key stations identified under the agreements cited in this section, the entities named in the agreements are subject to the requirements of § 37.9 of this part.

§ 37.55 Intercity rail station accessibility.

All intercity rail stations shall be made readily accessible to and usable by individuals with disabilities, including individuals who use wheelchairs, as soon as practicable, but in no event

later than July 26, 2010. This requirement is separate from and in addition to requirements set forth in §37.43 of this part.

§37.57 Required cooperation.

An owner or person in control of an intercity or commuter rail station shall provide reasonable cooperation to the responsible person(s) for that station with respect to the efforts of the responsible person to comply with the requirements of this subpart.

§37.59 Differences in accessibility completion dates.

Where different completion dates for accessible stations are established under this part for a station or portions of a station (e.g., extensions of different periods of time for a station which serves both rapid and commuter rail systems), accessibility to the following elements of the station shall be achieved by the earlier of the completion dates involved:

(a) Common elements of the station;

(b) Portions of the facility directly serving the rail system with the earlier completion date; and

(c) An accessible path from common elements of the station to portions of the facility directly serving the rail system with the earlier completion date.

§37.61 Public transportation programs and activities in existing facilities.

(a) A public entity shall operate a designated public transportation program or activity conducted in an existing facility so that, when viewed in its entirety, the program or activity is readily accessible to and usable by individuals with disabilities.

(b) This section does not require a public entity to make structural changes to existing facilities in order to make the facilities accessible by individuals who use wheelchairs, unless and to the extent required by §37.43 (with respect to alterations) or §§37.47 or 37.51 of this part (with respect to key stations). Entities shall comply with other applicable accessibility requirements for such facilities.

(c) Public entities, with respect to facilities that, as provided in paragraph (b) of this section, are not required to be made accessible to individuals who use wheelchairs, are not required to provide to such individuals services made available to the general public at such facilities when the individuals could not utilize or benefit from the services.

§§37.63–37.69 [Reserved]

Subpart D—Acquisition of Accessible Vehicles By Public Entities

§37.71 Purchase or lease of new non-rail vehicles by public entities operating fixed route systems.

(a) Except as provided elsewhere in this section, each public entity operating a fixed route system making a solicitation after August 25, 1990, to purchase or lease a new bus or other new vehicle for use on the system, shall ensure that the vehicle is readily accessible to and usable by individuals with disabilities, including individuals who use wheelchairs.

(b) A pubilc entity may purchase or lease a new bus that is not readily accessible to and usable by individuals with disabilities, including individuals who use wheelchairs, if it applies for, and the FTA Administrator grants, a waiver as provided for in this section.

(c) Before submitting a request for such a waiver, the public entity shall hold at least one public hearing concerning the proposed request.

(d) The FTA Administrator may grant a request for such a waiver if the public entity demonstrates to the FTA Administrator's satisfaction that—

(1) The initial solicitation for new buses made by the public entity specified that all new buses were to be lift-equipped and were to be otherwise accessible to and usable by individuals with disabilities;

(2) Hydraulic, electromechanical, or other lifts for such new buses could not be provided by any qualified lift manufacturer to the manufacturer of such new buses in sufficient time to comply with the solicitation; and

(3) Any further delay in purchasing new buses equipped with such necessary lifts would significantly impair transportation services in the community served by the public entity.

(e) The public entity shall include with its waiver request a copy of the initial solicitation and written documentation from the bus manufacturer of its good faith efforts to obtain lifts in time to comply with the solicitation, and a full justification for the assertion that the delay in bus procurement needed to obtain a lift-equipped bus would significantly impair transportation services in the community. This documentation shall include a specific date at which the lifts could be supplied, copies of advertisements in trade publications and inquiries to trade associations seeking lifts, and documentation of the public hearing.

(f) Any waiver granted by the FTA Administrator under this section shall be subject to the following conditions:

(1) The waiver shall apply only to the particular bus delivery to which the waiver request pertains;

(2) The waiver shall include a termination date, which will be based on information concerning when lifts will become available for installation on the new buses the public entity is purchasing. Buses delivered after this date, even though procured under a solicitation to which a waiver applied, shall be equipped with lifts;

(3) Any bus obtained subject to the waiver shall be capable of accepting a lift, and the public entity shall install a lift as soon as one becomes available;

(4) Such other terms and conditions as the FTA Administrator may impose.

(g)(1) When the FTA Administrator grants a waiver under this section, he/she shall promptly notify the appropriate committees of Congress.

(2) If the FTA Administrator has reasonable cause to believe that a public entity fraudulently applied for a waiver under this section, the FTA Administrator shall:

(i) Cancel the waiver if it is still in effect; and

(ii) Take other appropriate action.

§ 37.73 Purchase or lease of used non-rail vehicles by public entities operating fixed route systems.

(a) Except as provided elsewhere in this section, each public entity operating a fixed route system purchasing or leasing, after August 25, 1990, a used bus or other used vehicle for use on the system, shall ensure that the vehicle is readily accessible to and usable by individuals with disabilities, including individuals who use wheelchairs.

(b) A public entity may purchase or lease a used vehicle for use on its fixed route system that is not readily accessible to and usable by individuals with disabilities if, after making demonstrated good faith efforts to obtain an accessible vehicle, it is unable to do so.

(c) Good faith efforts shall include at least the following steps:

(1) An initial solicitation for used vehicles specifying that all used vehicles are to be lift-equipped and otherwise accessible to and usable by individuals with disabilities, or, if an initial solicitation is not used, a documented communication so stating;

(2) A nationwide search for accessible vehicles, involving specific inquiries to used vehicle dealers and other transit providers; and

(3) Advertising in trade publications and contacting trade associations.

(d) Each public entity purchasing or leasing used vehicles that are not readily accessible to and usable by individuals with disabilities shall retain documentation of the specific good faith efforts it made for three years from the date the vehicles were purchased. These records shall be made available, on request, to the FTA Administrator and the public.

§ 37.75 Remanufacture of non-rail vehicles and purchase or lease of remanufactured non-rail vehicles by public entities operating fixed route systems.

(a) This section applies to any public entity operating a fixed route system which takes one of the following actions:

(1) After August 25, 1990, remanufactures a bus or other vehicle so as to extend its useful life for five years or more or makes a solicitation for such remanufacturing; or

(2) Purchases or leases a bus or other vehicle which has been remanufactured so as to extend its useful life for five years or more, where the purchase or lease occurs after August 25, 1990, and during the period in which the useful life of the vehicle is extended.

(b) Vehicles acquired through the actions listed in paragraph (a) of this section shall, to the maximum extent feasible, be readily accessible to and usable by individuals with disabilities, including individuals who use wheelchairs.

(c) For purposes of this section, it shall be considered feasible to remanufacture a bus or other motor vehicle so as to be readily accessible to and usable by individuals with disabilities, including individuals who use wheelchairs, unless an engineering analysis demonstrates that including accessibility features required by this part would have a significant adverse effect on the structural integrity of the vehicle.

(d) If a public entity operates a fixed route system, any segment of which is included on the National Register of Historic Places, and if making a vehicle of historic character used solely on such segment readily accessible to and usable by individuals with disabilities would significantly alter the historic character of such vehicle, the public entity has only to make (or purchase or lease a remanufactured vehicle with) those modifications to make the vehicle accessible which do not alter the historic character of such vehicle, in consultation with the National Register of Historic Places.

(e) A public entity operating a fixed route system as described in paragraph (d) of this section may apply in writing to the FTA Administrator for a determination of the historic character of the vehicle. The FTA Administrator shall refer such requests to the National Register of Historic Places, and shall rely on its advice in making determinations of the historic character of the vehicle.

§ 37.77 Purchase or lease of new non-rail vehicles by public entities operating a demand responsive system for the general public.

(a) Except as provided in this section, a public entity operating a demand responsive system for the general public making a solicitation after August 25, 1990, to purchase or lease a new bus or other new vehicle for use on the system, shall ensure that the vehicle is readily accessible to and usable by individuals with disabilities, including individuals who use wheelchairs.

(b) If the system, when viewed in its entirety, provides a level of service to individuals with disabilities, including individuals who use wheelchairs, equivalent to the level of service it provides to individuals without disabilities, it may purchase new vehicles that are not readily accessible to and usable by individuals with disabilities.

(c) For purposes of this section, a demand responsive system, when viewed in its entirety, shall be deemed to provide equivalent service if the service available to individuals with disabilities, including individuals who use wheelchairs, is provided in the most integrated setting appropriate to the needs of the individual and is equivalent to the service provided other individuals with respect to the following service characteristics:

(1) Response time;

(2) Fares;

(3) Geographic area of service;

(4) Hours and days of service;

(5) Restrictions or priorities based on trip purpose;

(6) Availability of information and reservations capability; and

(7) Any constraints on capacity or service availability.

(d) A public entity receiving FTA funds under section 18 or a public entity in a small urbanized area which receives FTA funds under Section 9 from a state administering agency rather than directly from FTA, which determines that its service to individuals with disabilities is equivalent to that provided other persons shall, before any procurement of an inaccessible vehicle, file with the appropriate state program office a certificate that it provides equivalent service meeting the standards of paragraph (c) of this section. Public entities operating demand responsive service receiving funds under any other section of the FT Act shall file the certificate with the appropriate FTA regional office. A public entity which does not receive FTA funds shall make such a certificate and retain it in its files, subject to inspection on request of FTA. All certificates under this paragraph may be made and filed in connection with a particular

procurement or in advance of a procurement; however, no certificate shall be valid for more than one year. A copy of the required certificate is found in appendix C to this part.

(e) The waiver mechanism set forth in §37.71(b)–(g) (unavailability of lifts) of this subpart shall also be available to public entities operating a demand responsive system for the general public.

§ 37.79 Purchase or lease of new rail vehicles by public entities operating rapid or light rail systems.

Each public entity operating a rapid or light rail system making a solicitation after August 25, 1990, to purchase or lease a new rapid or light rail vehicle for use on the system shall ensure that the vehicle is readily accessible to and usable by individuals with disabilities, including individuals who use wheelchairs.

§ 37.81 Purchase or lease of used rail vehicles by public entities operating rapid or light rail systems.

(a) Except as provided elsewhere in this section, each public entity operating a rapid or light rail system which, after August 25, 1990, purchases or leases a used rapid or light rail vehicle for use on the system shall ensure that the vehicle is readily accessible to and usable by individuals with disabilities, including individuals who use wheelchairs.

(b) A public entity may purchase or lease a used rapid or light rail vehicle for use on its rapid or light rail system that is not readily accessible to and usable by individuals if, after making demonstrated good faith efforts to obtain an accessible vehicle, it is unable to do so.

(c) Good faith efforts shall include at least the following steps:

(1) The initial solicitation for used vehicles made by the public entity specifying that all used vehicles were to be accessible to and usable by individuals with disabilities, or, if a solicitation is not used, a documented communication so stating;

(2) A nationwide search for accessible vehicles, involving specific inquiries to manufacturers and other transit providers; and

(3) Advertising in trade publications and contacting trade associations.

(d) Each public entity purchasing or leasing used rapid or light rail vehicles that are not readily accessible to and usable by individuals with disabilities shall retain documentation of the specific good faith efforts it made for three years from the date the vehicles were purchased. These records shall be made available, on request, to the FTA Administrator and the public.

§ 37.83 Remanufacture of rail vehicles and purchase or lease of remanufactured rail vehicles by public entities operating rapid or light rail systems.

(a) This section applies to any public entity operating a rapid or light rail system which takes one of the following actions:

(1) After August 25, 1990, remanufactures a light or rapid rail vehicle so as to extend its useful life for five years or more or makes a solicitation for such remanufacturing;

(2) Purchases or leases a light or rapid rail vehicle which has been remanufactured so as to extend its useful life for five years or more, where the purchase or lease occurs after August 25, 1990, and during the period in which the useful life of the vehicle is extended.

(b) Vehicles acquired through the actions listed in paragraph (a) of this section shall, to the maximum extent feasible, be readily accessible to and usable by individuals with disabilities, including individuals who use wheelchairs.

(c) For purposes of this section, it shall be considered feasible to remanufacture a rapid or light rail vehicle so as to be readily accessible to and usable by individuals with disabilities, including individuals who use wheelchairs, unless an engineering analysis demonstrates that doing so would have a significant adverse effect on the structural integrity of the vehicle.

(d) If a public entity operates a rapid or light rail system any segment of which is included on the National Register of Historic Places and if making a rapid or light rail vehicle of historic character used solely on such segment

readily accessible to and usable by individuals with disabilities would significantly alter the historic character of such vehicle, the public entity need only make (or purchase or lease a remanufactured vehicle with) those modifications that do not alter the historic character of such vehicle.

(e) A public entity operating a fixed route system as described in paragraph (d) of this section may apply in writing to the FTA Administrator for a determination of the historic character of the vehicle. The FTA Administrator shall refer such requests to the National Register of Historic Places and shall rely on its advice in making a determination of the historic character of the vehicle.

§ 37.85 Purchase or lease of new intercity and commuter rail cars.

Amtrak or a commuter authority making a solicitation after August 25, 1990, to purchase or lease a new intercity or commuter rail car for use on the system shall ensure that the vehicle is readily accessible to and usable by individuals with disabilities, including individuals who use wheelchairs.

§ 37.87 Purchase or lease of used intercity and commuter rail cars.

(a) Except as provided elsewhere in this section, Amtrak or a commuter authority purchasing or leasing a used intercity or commuter rail car after August 25, 1990, shall ensure that the car is readily accessible to and usable by individuals with disabilities, including individuals who use wheelchairs.

(b) Amtrak or a commuter authority may purchase or lease a used intercity or commuter rail car that is not readily accessible to and usable by individuals if, after making demonstrated good faith efforts to obtain an accessible vehicle, it is unable to do so.

(c) Good faith efforts shall include at least the following steps:

(1) An initial solicitation for used vehicles specifying that all used vehicles accessible to and usable by individuals with disabilities;

(2) A nationwide search for accessible vehicles, involving specific inquiries to used vehicle dealers and other transit providers; and

(3) Advertising in trade publications and contacting trade associations.

(d) When Amtrak or a commuter authority leases a used intercity or commuter rail car for a period of seven days or less, Amtrak or the commuter authority may make and document good faith efforts as provided in this paragraph instead of in the ways provided in paragraph (c) of this section:

(1) By having and implementing, in its agreement with any intercity railroad or commuter authority that serves as a source of used intercity or commuter rail cars for a lease of seven days or less, a provision requiring that the lessor provide all available accessible rail cars before providing any inaccessible rail cars.

(2) By documenting that, when there is more than one source of intercity or commuter rail cars for a lease of seven days or less, the lessee has obtained all available accessible intercity or commuter rail cars from all sources before obtaining inaccessible intercity or commuter rail cars from any source.

(e) Amtrak and commuter authorities purchasing or leasing used intercity or commuter rail cars that are not readily accessible to and usable by individuals with disabilities shall retain documentation of the specific good faith efforts that were made for three years from the date the cars were purchased. These records shall be made available, on request, to the Federal Railroad Administration or FTA Administrator, as applicable. These records shall be made available to the public, on request.

[56 FR 45621, Sept. 6, 1991, as amended at 58 FR 63102, Nov. 30, 1993]

§ 37.89 Remanufacture of intercity and commuter rail cars and purchase or lease of remanufactured intercity and commuter rail cars.

(a) This section applies to Amtrak or a commuter authority which takes one of the following actions:

(1) Remanufactures an intercity or commuter rail car so as to extend its useful life for ten years or more;

(2) Purchases or leases an intercity or commuter rail car which has been remanufactured so as to extend its useful life for ten years or more.

(b) Intercity and commuter rail cars listed in paragraph (a) of this section shall, to the maximum extent feasible, be readily accessible to and usable by individuals with disabilities, including individuals who use wheelchairs.

(c) For purposes of this section, it shall be considered feasible to remanufacture an intercity or commuter rail car so as to be readily accessible to and usable by individuals with disabilities, including individuals who use wheelchairs, unless an engineering analysis demonstrates that remanufacturing the car to be accessible would have a significant adverse effect on the structural integrity of the car.

§ 37.91 Wheelchair locations and food service on intercity rail trains.

(a) As soon as practicable, but in no event later than July 26, 1995, each person providing intercity rail service shall provide on each train a number of spaces—

(1) To park wheelchairs (to accommodate individuals who wish to remain in their wheelchairs) equal to not less than one half of the number of single level rail passenger coaches in the train; and

(2) To fold and store wheelchairs (to accommodate individuals who wish to transfer to coach seats) equal to not less than one half the number of single level rail passenger coaches in the train.

(b) As soon as practicable, but in no event later than July 26, 2000, each person providing intercity rail service shall provide on each train a number of spaces—

(1) To park wheelchairs (to accommodate individuals who wish to remain in their wheelchairs) equal to not less than the total number of single level rail passenger coaches in the train; and

(2) To fold and store wheelchairs (to accommodate individuals who wish to transfer to coach seats) equal to not less than the total number of single level rail passenger coaches in the train.

(c) In complying with paragraphs (a) and (b) of this section, a person providing intercity rail service may not provide more than two spaces to park wheelchairs nor more than two spaces to fold and store wheelchairs in any one coach or food service car.

(d) Unless not practicable, a person providing intercity rail transportation shall place an accessible car adjacent to the end of a single level dining car through which an individual who uses a wheelchair may enter.

(e) On any train in which either a single level or bi-level dining car is used to provide food service, a person providing intercity rail service shall provide appropriate aids and services to ensure that equivalent food service is available to individuals with disabilities, including individuals who use wheelchairs, and to passengers traveling with such individuals. Appropriate auxiliary aids and services include providing a hard surface on which to eat.

(f) This section does not require the provision of securement devices on intercity rail cars.

§ 37.93 One car per train rule.

(a) The definition of accessible for purposes of meeting the one car per train rule is spelled out in the applicable subpart for each transportation system type in part 38 of this title.

(b) Each person providing intercity rail service and each commuter rail authority shall ensure that, as soon as practicable, but in no event later than July 26, 1995, that each train has one car that is readily accessible to and usable by individuals with disabilities, including individuals who use wheelchairs.

(c) Each public entity providing light or rapid rail service shall ensure that each train, consisting of two or more vehicles, includes at least one car that is readily accessible to and usable by individuals with disabilities, including individuals who use wheelchairs, as soon as practicable but in no case later than July 25, 1995.

§ 37.95 Ferries and other passenger vessels operated by public entities. [Reserved]

§§ 37.97–37.99 [Reserved]

Subpart E—Acquisition of Accessible Vehicles by Private Entities

§ 37.101 Purchase or lease of vehicles by private entities not primarily engaged in the business of transporting people.

(a) *Application.* This section applies to all purchases or leases of vehicles by private entities which are not primarily engaged in the business of transporting people, in which a solicitation for the vehicle is made after August 25, 1990.

(b) *Fixed Route System. Vehicle Capacity Over 16.* If the entity operates a fixed route system and purchases or leases a vehicle with a seating capacity of over 16 passengers (including the driver) for use on the system, it shall ensure that the vehicle is readily accessible to and usable by individuals with disabilities, including individuals who use wheelchairs.

(c) *Fixed Route System. Vehicle Capacity of 16 or Fewer.* If the entity operates a fixed route system and purchases or leases a vehicle with a seating capacity of 16 or fewer passengers (including the driver) for use on the system, it shall ensure that the vehicle is readily accessible to and usable by individuals with disabilities, including individuals who use wheelchairs, unless the system, when viewed in its entirety, meets the standard for equivalent service of § 37.105 of this part.

(d) *Demand Responsive System, Vehicle Capacity Over 16.* If the entity operates a demand responsive system, and purchases or leases a vehicle with a seating capacity of over 16 passengers (including the driver) for use on the system, it shall ensure that the vehicle is readily accessible to and usable by individuals with disabilities, including individuals who use wheelchairs, unless the system, when viewed in its entirety, meets the standard for equivalent service of § 37.105 of this part.

(e) *Demand Responsive System, Vehicle Capacity of 16 or Fewer.* Entities providing demand responsive transportation covered under this section are not specifically required to ensure that new vehicles with seating capacity of 16 or fewer are accessible to individuals with wheelchairs. These entities are required to ensure that their systems, when viewed in their entirety, meet the equivalent service requirements of §§ 37.171 and 37.105, regardless of whether or not the entities purchase a new vehicle.

[56 FR 45621, Sept. 6, 1991, as amended at 61 FR 25416, May 21, 1996]

§ 37.103 Purchase or lease of new non-rail vehicles by private entities primarily engaged in the business of transporting people.

(a) *Application.* This section applies to all acquisitions of new vehicles by private entities which are primarily engaged in the business of transporting people and whose operations affect commerce, in which a solicitation for the vehicle is made (except as provided in paragraph (d) of this section) after August 25, 1990.

(b) *Fixed route systems.* If the entity operates a fixed route system, and purchases or leases a new vehicle other than an automobile, a van with a seating capacity of less than eight persons (including the driver), or an over-the-road bus, it shall ensure that the vehicle is readily accessible to and usable by individuals with disabilities, including individuals who use wheelchairs.

(c) *Demand responsive systems.* If the entity operates a demand responsive system, and purchases or leases a new vehicle other than an automobile, a van with a seating capacity of less than eight persons (including the driver), or an over-the-road bus, it shall ensure that the vehicle is readily accessible to and usable by individuals with disabilities, including individuals who use wheelchairs, unless the system, when viewed in its entirety, meets the standard for equivalent service of § 37.105 of this part.

(d) *Vans with a capacity of fewer than 8 persons.* If the entity operates either a fixed route or demand responsive system, and purchases or leases a new van with a seating capacity of fewer than eight persons including the driver (the solicitation for the vehicle being made

after February 25, 1992), the entity shall ensure that the vehicle is readily accessible to and usable by individuals with disabilities, including individuals who use wheelchairs, unless the system, when viewed in its entirety, meets the standard for equivalent service of §37.105 of this part.

§ 37.105 Equivalent service standard.

For purposes of §§37.101 and 37.103 of this part, a fixed route system or demand responsive system, when viewed in its entirety, shall be deemed to provide equivalent service if the service available to individuals with disabilities, including individuals who use wheelchairs, is provided in the most integrated setting appropriate to the needs of the individual and is equivalent to the service provided other individuals with respect to the following service characteristics:

(a) (1) Schedules/headways (if the system is fixed route);

(2) Response time (if the system is demand responsive);

(b) Fares;

(c) Geographic area of service;

(d) Hours and days of service;

(e) Availability of information;

(f) Reservations capability (if the system is demand responsive);

(g) Any constraints on capacity or service availability;

(h) Restrictions priorities based on trip purpose (if the system is demand responsive).

§ 37.107 Acquisition of passenger rail cars by private entities primarily engaged in the business of transporting people.

(a) A private entity which is primarily engaged in the business of transporting people and whose operations affect commerce, which makes a solicitation after February 25, 1992, to purchase or lease a new rail passenger car to be used in providing specified public transportation, shall ensure that the car is readily accessible to, and usable by, individuals with disabilities, including individuals who use wheelchairs. The accessibility standards in part 38 of this title which apply depend upon the type of service in which the car will be used.

(b) Except as provided in paragraph (c) of this section, a private entity which is primarily engaged in transporting people and whose operations affect commerce, which remanufactures a rail passenger car to be used in providing specified public transportation to extend its useful life for ten years or more, or purchases or leases such a remanufactured rail car, shall ensure that the rail car, to the maximum extent feasible, is made readily accessible to and usable by individuals with disabilities, including individuals who use wheelchairs. For purposes of this paragraph, it shall be considered feasible to remanufacture a rail passenger car to be readily accessible to and usable by individuals with disabilities, including individuals who use wheelchairs, unless an engineering analysis demonstrates that doing so would have a significant adverse effect on the structural integrity of the car.

(c) Compliance with paragraph (b) of this section is not required to the extent that it would significantly alter the historic or antiquated character of a historic or antiquated rail passenger car, or a rail station served exclusively by such cars, or would result in the violation of any rule, regulation, standard or order issued by the Secretary under the Federal Railroad Safety Act of 1970. For purposes of this section, a historic or antiquated rail passenger car means a rail passenger car—

(1) Which is not less than 30 years old at the time of its use for transporting individuals;

(2) The manufacturer of which is no longer in the business of manufacturing rail passenger cars; and

(3) Which—

(i) Has a consequential association with events or persons significant to the past; or

(ii) Embodies, or is being restored to embody, the distinctive characteristics of a type of rail passenger car used in the past, or to represent a time period which has passed.

§ 37.109 Ferries and other passenger vessels operated by private entities. [Reserved]

§§ 37.111–37.119 [Reserved]

Subpart F—Paratransit as a Complement to Fixed Route Service

§ 37.121 Requirement for comparable complementary paratransit service.

(a) Except as provided in paragraph (c) of this section, each public entity operating a fixed route system shall provide paratransit or other special service to individuals with disabilities that is comparable to the level of service provided to individuals without disabilities who use the fixed route system.

(b) To be deemed comparable to fixed route service, a complementary paratransit system shall meet the requirements of §§ 37.123–37.133 of this subpart. The requirement to comply with § 37.131 may be modified in accordance with the provisions of this subpart relating to undue financial burden.

(c) Requirements for complementary paratransit do not apply to commuter bus, commuter rail, or intercity rail systems.

§ 37.123 ADA paratransit eligibility: Standards.

(a) Public entities required by § 37.121 of this subpart to provide complementary paratransit service shall provide the service to the ADA paratransit eligible individuals described in paragraph (e) of this section.

(b) If an individual meets the eligibility criteria of this section with respect to some trips but not others, the individual shall be ADA paratransit eligible only for those trips for which he or she meets the criteria.

(c) Individuals may be ADA paratransit eligible on the basis of a permanent or temporary disability.

(d) Public entities may provide complementary paratransit service to persons other than ADA paratransit eligible individuals. However, only the cost of service to ADA paratransit eligible individuals may be considered in a public entity's request for an undue financial burden waiver under §§ 37.151–37.155 of this part.

(e) The following individuals are ADA paratransit eligible:

(1) Any individual with a disability who is unable, as the result of a physical or mental impairment (including a vision impairment), and without the assistance of another individual (except the operator of a wheelchair lift or other boarding assistance device), to board, ride, or disembark from any vehicle on the system which is readily accessible to and usable individuals with disabilities.

(2) Any individual with a disability who needs the assistance of a wheelchair lift or other boarding assistance device and is able, with such assistance, to board, ride and disembark from any vehicle which is readily accessible to and usable by individuals with disabilities if the individual wants to travel on a route on the system during the hours of operation of the system at a time, or within a reasonable period of such time, when such a vehicle is not being used to provide designated public transportation on the route.

(i) An individual is eligible under this paragraph with respect to travel on an otherwise accessible route on which the boarding or disembarking location which the individual would use is one at which boarding or disembarking from the vehicle is precluded as provided in § 37.167(g) of this part.

(ii) An individual using a common wheelchair is eligible under this paragraph if the individual's wheelchair cannot be accommodated on an existing vehicle (e.g., because the vehicle's lift does not meet the standards of part 38 of this title), even if that vehicle is accessible to other individuals with disabilities and their mobility wheelchairs.

(iii) With respect to rail systems, an individual is eligible under this paragraph if the individual could use an accessible rail system, but—

(A) There is not yet one accessible car per train on the system; or

(B) Key stations have not yet been made accessible.

(3) Any individual with a disability who has a specific impairment-related

condition which prevents such individual from traveling to a boarding location or from a disembarking location on such system.

(i) Only a specific impairment-related condition which prevents the individual from traveling to a boarding location or from a disembarking location is a basis for eligibility under this paragraph. A condition which makes traveling to boarding location or from a disembarking location more difficult for a person with a specific impairment-related condition than for an individual who does not have the condition, but does not prevent the travel, is not a basis for eligibility under this paragraph.

(ii) Architectural barriers not under the control of the public entity providing fixed route service and environmental barriers (e.g., distance, terrain, weather) do not, standing alone, form a basis for eligibility under this paragraph. The interaction of such barriers with an individual's specific impairment-related condition may form a basis for eligibility under this paragraph, if the effect is to prevent the individual from traveling to a boarding location or from a disembarking location.

(f) Individuals accompanying an ADA paratransit eligible individual shall be provided service as follows:

(1) One other individual accompanying the ADA paratransit eligible individual shall be provided service—

(i) If the ADA paratransit eligible individual is traveling with a personal care attendant, the entity shall provide service to one other individual in addition to the attendant who is accompanying the eligible individual;

(ii) A family member or friend is regarded as a person accompanying the eligible individual, and not as a personal care attendant, unless the family member or friend registered is acting in the capacity of a personal care attendant;

(2) Additional individuals accompanying the ADA paratransit eligible individual shall be provided service, provided that space is available for them on the paratransit vehicle carrying the ADA paratransit eligible individual and that transportation of the additional individuals will not result in a denial of service to ADA paratransit eligible individuals;

(3) In order to be considered as ''accompanying'' the eligible individual for purposes of this paragraph (f), the other individual(s) shall have the same origin and destination as the eligible individual.

§ 37.125 ADA paratransit eligibility: Process.

Each public entity required to provide complementary paratransit service by § 37.121 of this part shall establish a process for determining ADA paratransit eligibility.

(a) The process shall strictly limit ADA paratransit eligibility to individuals specified in § 37.123 of this part.

(b) All information about the process, materials necessary to apply for eligibility, and notices and determinations concerning eligibility shall be made available in accessible formats, upon request.

(c) If, by a date 21 days following the submission of a complete application, the entity has not made a determination of eligibility, the applicant shall be treated as eligible and provided service until and unless the entity denies the application.

(d) The entity's determination concerning eligibility shall be in writing. If the determination is that the individual is ineligible, the determination shall state the reasons for the finding.

(e) The public entity shall provide documentation to each eligible individual stating that he or she is ''ADA Paratransit Eligible.'' The documentation shall include the name of the eligible individual, the name of the transit provider, the telephone number of the entity's paratransit coordinator, an expiration date for eligibility, and any conditions or limitations on the individual's eligibility including the use of a personal care attendant.

(f) The entity may require recertification of the eligibility of ADA paratransit eligible individuals at reasonable intervals.

(g) The entity shall establish an administrative appeal process through which individuals who are denied eligibility can obtain review of the denial.

(1) The entity may require that an appeal be filed within 60 days of the denial of an individual's application.

(2) The process shall include an opportunity to be heard and to present information and arguments, separation of functions (i.e., a decision by a person not involved with the initial decision to deny eligibility), and written notification of the decision, and the reasons for it.

(3) The entity is not required to provide paratransit service to the individual pending the determination on appeal. However, if the entity has not made a decision within 30 days of the completion of the appeal process, the entity shall provide paratransit service from that time until and unless a decision to deny the appeal is issued.

(h) The entity may establish an administrative process to suspend, for a reasonable period of time, the provision of complementary paratransit service to ADA eligible individuals who establish a pattern or practice of missing scheduled trips.

(1) Trips missed by the individual for reasons beyond his or her control (including, but not limited to, trips which are missed due to operator error) shall not be a basis for determining that such a pattern or practice exists.

(2) Before suspending service, the entity shall take the following steps:

(i) Notify the individual in writing that the entity proposes to suspend service, citing with specificity the basis of the proposed suspension and setting forth the proposed sanction.

(ii) Provide the individual an opportunity to be heard and to present information and arguments;

(iii) Provide the individual with written notification of the decision and the reasons for it.

(3) The appeals process of paragraph (g) of this section is available to an individual on whom sanctions have been imposed under this paragraph. The sanction is stayed pending the outcome of the appeal.

(i) In applications for ADA paratransit eligibility, the entity may require the applicant to indicate whether or not he or she travels with a personal care attendant.

§ 37.127 Complementary paratransit service for visitors.

(a) Each public entity required to provide complementary paratransit service under § 37.121 of this part shall make the service available to visitors as provided in this section.

(b) For purposes of this section, a visitor is an individual with disabilities who does not reside in the jurisdiction(s) served by the public entity or other entities with which the public entity provides coordinated complementary paratransit service within a region.

(c) Each public entity shall treat as eligible for its complementary paratransit service all visitors who present documentation that they are ADA paratransit eligible, under the criteria of § 37.125 of this part, in the jurisdiction in which they reside.

(d) With respect to visitors with disabilities who do not present such documentation, the public entity may require the documentation of the individual's place of residence and, if the individual's disability is not apparent, of his or her disability. The entity shall provide paratransit service to individuals with disabilities who qualify as visitors under paragraph (b) of this section. The entity shall accept a certification by such individuals that they are unable to use fixed route transit.

(e) A public entity shall make the service to a visitor required by this section available for any combination of 21 days during any 365-day period beginning with the visitor's first use of the service during such 365-day period. In no case shall the public entity require a visitor to apply for or receive eligibility certification from the public entity before receiving the service required by this section.

[56 FR 45621, Sept. 6, 1991, as amended at 61 FR 25416, May 21, 1996]

§ 37.129 Types of service.

(a) Except as provided in this section, complementary paratransit service for ADA paratransit eligible persons shall be origin-to-destination service.

(b) Complementary paratransit service for ADA paratransit eligible persons described in § 37.123(e)(2) of this part may also be provided by on-call

bus service or paratransit feeder service to an accessible fixed route, where such service enables the individual to use the fixed route bus system for his or her trip.

(c) Complementary paratransit service for ADA eligible persons described in § 37.123(e)(3) of this part also may be provided by paratransit feeder service to and/or from an accessible fixed route.

§ 37.131 Service criteria for complementary paratransit.

The following service criteria apply to complementary paratransit required by § 37.121 of this part.

(a) *Service Area*—(1) *Bus.* (i) The entity shall provide complementary paratransit service to origins and destinations within corridors with a width of three-fourths of a mile on each side of each fixed route. The corridor shall include an area with a three-fourths of a mile radius at the ends of each fixed route.

(ii) Within the core service area, the entity also shall provide service to small areas not inside any of the corridors but which are surrounded by corridors.

(iii) Outside the core service area, the entity may designate corridors with widths from three-fourths of a mile up to one and one half miles on each side of a fixed route, based on local circumstances.

(iv) For purposes of this paragraph, the core service area is that area in which corridors with a width of three-fourths of a mile on each side of each fixed route merge together such that, with few and small exceptions, all origins and destinations within the area would be served.

(2) *Rail.* (i) For rail systems, the service area shall consist of a circle with a radius of ¾ of a mile around each station.

(ii) At end stations and other stations in outlying areas, the entity may designate circles with radii of up to 1½ miles as part of its service area, based on local circumstances.

(3) *Jurisdictional boundaries.* Notwithstanding any other provision of this paragraph, an entity is not required to provide paratransit service in an area outside the boundaries of the jurisdiction(s) in which it operates, if the entity does not have legal authority to operate in that area. The entity shall take all practicable steps to provide paratransit service to any part of its service area.

(b) *Response time.* The entity shall schedule and provide paratransit service to any ADA paratransit eligible person at any requested time on a particular day in response to a request for service made the previous day. Reservations may be taken by reservation agents or by mechanical means.

(1) The entity shall make reservation service available during at least all normal business hours of the entity's administrative offices, as well as during times, comparable to normal business hours, on a day when the entity's offices are not open before a service day.

(2) The entity may negotiate pickup times with the individual, but the entity shall not require an ADA paratransit eligible individual to schedule a trip to begin more than one hour before or after the individual's desired departure time.

(3) The entity may use real-time scheduling in providing complementary paratransit service.

(4) The entity may permit advance reservations to be made up to 14 days in advance of an ADA paratransit eligible individual's desired trips. When an entity proposes to change its reservations system, it shall comply with the public participation requirements equivalent to those of § 37.137 (b) and (c).

(c) *Fares.* The fare for a trip charged to an ADA paratransit eligible user of the complementary paratransit service shall not exceed twice the fare that would be charged to an individual paying full fare (i.e., without regard to discounts) for a trip of similar length, at a similar time of day, on the entity's fixed route system.

(1) In calculating the full fare that would be paid by an individual using the fixed route system, the entity may include transfer and premium charges applicable to a trip of similar length, at a similar time of day, on the fixed route system.

(2) The fares for individuals accompanying ADA paratransit eligible individuals, who are provided service under § 37.123 (f) of this part, shall be the same as for the ADA paratransit eligible individuals they are accompanying.

(3) A personal care attendant shall not be charged for complementary paratransit service.

(4) The entity may charge a fare higher than otherwise permitted by this paragraph to a social service agency or other organization for agency trips (i.e., trips guaranteed to the organization).

(d) *Trip purpose restrictions.* The entity shall not impose restrictions or priorities based on trip purpose.

(e) *Hours and days of service.* The complementary paratransit service shall be available throughout the same hours and days as the entity's fixed route service.

(f) *Capacity constraints.* The entity shall not limit the availability of complementary paratransit service to ADA paratransit eligible individuals by any of the following:

(1) Restrictions on the number of trips an individual will be provided;

(2) Waiting lists for access to the service; or

(3) Any operational pattern or practice that significantly limits the availability of service to ADA paratransit eligible persons.

(i) Such patterns or practices include, but are not limited to, the following:

(A) Substantial numbers of significantly untimely pickups for initial or return trips;

(B) Substantial numbers of trip denials or missed trips;

(C) Substantial numbers of trips with excessive trip lengths.

(ii) Operational problems attributable to causes beyond the control of the entity (including, but not limited to, weather or traffic conditions affecting all vehicular traffic that were not anticipated at the time a trip was scheduled) shall not be a basis for determining that such a pattern or practice exists.

(g) *Additional service.* Public entities may provide complementary paratransit service to ADA paratransit eligible individuals exceeding that provided for in this section. However, only the cost of service provided for in this section may be considered in a public entity's request for an undue financial burden waiver under §§ 37.151–37.155 of this part.

[56 FR 45621, Sept. 6, 1991, as amended at 61 FR 25416, May 21, 1996; 71 FR 63266, Oct. 30, 2006]

§ 37.133 Subscription service.

(a) This part does not prohibit the use of subscription service by public entities as part of a complementary paratransit system, subject to the limitations in this section.

(b) Subscription service may not absorb more than fifty percent of the number of trips available at a given time of day, unless there is non-subscription capacity.

(c) Notwithstanding any other provision of this part, the entity may establish waiting lists or other capacity constraints and trip purpose restrictions or priorities for participation in the subscription service only.

§ 37.135 Submission of paratransit plan.

(a) *General.* Each public entity operating fixed route transportation service, which is required by § 37.121 to provide complementary paratransit service, shall develop a paratransit plan.

(b) *Initial submission.* Except as provided in § 37.141 of this part, each entity shall submit its initial plan for compliance with the complementary paratransit service provision by January 26, 1992, to the appropriate location identified in paragraph (f) of this section.

(c) *Annual Updates.* Except as provided in this paragraph, each entity shall submit an annual update to its plan on January 26 of each succeeding year.

(1) If an entity has met and is continuing to meet all requirements for complementary paratransit in §§ 37.121–37.133 of this part, the entity may submit to FTA an annual certification of continued compliance in lieu of a plan update. Entities that have submitted a joint plan under § 37.141 may submit a joint certification under this paragraph. The requirements of §§ 37.137 (a) and (b), 37.138 and 37.139 do not apply

when a certification is submitted under this paragraph.

(2) In the event of any change in circumstances that results in an entity which has submitted a certification of continued compliance falling short of compliance with §§ 37.121–37.133, the entity shall immediately notify FTA in writing of the problem. In this case, the entity shall also file a plan update meeting the requirements of §§ 37.137–37.139 of this part on the next following January 26 and in each succeeding year until the entity returns to full compliance.

(3) An entity that has demonstrated undue financial burden to the FTA shall file a plan update meeting the requirements of §§ 37.137–37.139 of this part on each January 26 until full compliance with §§ 37.121–37.133 is attained.

(4) If FTA reasonably believes that an entity may not be fully complying with all service criteria, FTA may require the entity to provide an annual update to its plan.

(d) *Phase-in of implementation.* Each plan shall provide full compliance by no later than January 26, 1997, unless the entity has received a waiver based on undue financial burden. If the date for full compliance specified in the plan is after January 26, 1993, the plan shall include milestones, providing for measured, proportional progress toward full compliance.

(e) *Plan implementation.* Each entity shall begin implementation of its plan on January 26, 1992.

(f) *Submission locations.* An entity shall submit its plan to one of the following offices, as appropriate:

(1) The individual state administering agency, if it is—

(i) A section 18 recipient;

(ii) A small urbanized area recipient of section 9 funds administered by the State;

(iii) A participant in a coordinated plan, in which all of the participating entities are eligible to submit their plans to the State; or

(2) The FTA Regional Office (as listed in appendix B to this part) for all other entities required to submit a paratransit plan. This includes an FTA recipient under section 9 of the FT Act; entities submitting a joint plan (unless they meet the requirements of paragraph (f)(1)(iii) of this section), and a public entity not an FT Act recipient.

[56 FR 45621, Sept. 6, 1991, as amended at 61 FR 25416, May 21, 1996; 61 FR 26468, May 28, 1996]

§ 37.137 Paratransit plan development.

(a) *Survey of existing services.* Each submitting entity shall survey the area to be covered by the plan to identify any person or entity (public or private) which provides a paratransit or other special transportation service for ADA paratransit eligible individuals in the service area to which the plan applies.

(b) *Public participation.* Each submitting entity shall ensure public participation in the development of its paratransit plan, including at least the following:

(1) *Outreach.* Each submitting entity shall solicit participation in the development of its plan by the widest range of persons anticipated to use its paratransit service. Each entity shall develop contacts, mailing lists and other appropriate means for notification of opportunities to participate in the development of the paratransit plan;

(2) *Consultation with individuals with disabilities.* Each entity shall contact individuals with disabilities and groups representing them in the community. Consultation shall begin at an early stage in the plan development and should involve persons with disabilities in all phases of plan development. All documents and other information concerning the planning procedure and the provision of service shall be available, upon request, to members of the public, except where disclosure would be an unwarranted invasion of personal privacy;

(3) *Opportunity for public comment.* The submitting entity shall make its plan available for review before the plan is finalized. In making the plan available for public review, the entity shall ensure that the plan is available upon request in accessible formats;

(4) *Public hearing.* The entity shall sponsor at a minimum one public hearing and shall provide adequate notice of the hearing, including advertisement in appropriate media, such as newspapers of general and special interest circulation and radio announcements; and

(5) *Special requirements.* If the entity intends to phase-in its paratransit service over a multi-year period, or request a waiver based on undue financial burden, the public hearing shall afford the opportunity for interested citizens to express their views concerning the phase-in, the request, and which service criteria may be delayed in implementation.

(c) *Ongoing requirement.* The entity shall create an ongoing mechanism for the participation of individuals with disabilities in the continued development and assessment of services to persons with disabilities. This includes, but is not limited to, the development of the initial plan, any request for an undue financial burden waiver, and each annual submission.

§ 37.139 Plan contents.

Each plan shall contain the following information:

(a) Identification of the entity or entities submitting the plan, specifying for each—

(1) Name and address; and

(2) Contact person for the plan, with telephone number and facsimile telephone number (FAX), if applicable.

(b) A description of the fixed route system as of January 26, 1992 (or subsequent year for annual updates), including—

(1) A description of the service area, route structure, days and hours of service, fare structure, and population served. This includes maps and tables, if appropriate;

(2) The total number of vehicles (bus, van, or rail) operated in fixed route service (including contracted service), and percentage of accessible vehicles and percentage of routes accessible to and usable by persons with disabilities, including persons who use wheelchairs;

(3) Any other information about the fixed route service that is relevant to establishing the basis for comparability of fixed route and paratransit service.

(c) A description of existing paratransit services, including:

(1) An inventory of service provided by the public entity submitting the plan;

(2) An inventory of service provided by other agencies or organizations, which may in whole or in part be used to meet the requirement for complementary paratransit service; and

(3) A description of the available paratransit services in paragraphs (c)(2) and (c)(3) of this section as they relate to the service criteria described in § 37.131 of this part of service area, response time, fares, restrictions on trip purpose, hours and days of service, and capacity constraints; and to the requirements of ADA paratransit eligibility.

(d) A description of the plan to provide comparable paratransit, including:

(1) An estimate of demand for comparable paratransit service by ADA eligible individuals and a brief description of the demand estimation methodology used;

(2) An analysis of differences between the paratransit service currently provided and what is required under this part by the entity(ies) submitting the plan and other entities, as described in paragraph (c) of this section;

(3) A brief description of planned modifications to existing paratransit and fixed route service and the new paratransit service planned to comply with the ADA paratransit service criteria;

(4) A description of the planned comparable paratransit service as it relates to each of the service criteria described in § 37.131 of this part—service area, absence of restrictions or priorities based on trip purpose, response time, fares, hours and days of service, and lack of capacity constraints. If the paratransit plan is to be phased in, this paragraph shall be coordinated with the information being provided in paragraphs (d)(5) and (d)(6) of this paragraph;

(5) A timetable for implementing comparable paratransit service, with a specific date indicating when the planned service will be completely operational. In no case may full implementation be completed later than January 26, 1997. The plan shall include milestones for implementing phases of the plan, with progress that can be objectively measured yearly;

(6) A budget for comparable paratransit service, including capital and operating expenditures over five years.

(e) A description of the process used to certify individuals with disabilities

as ADA paratransit eligible. At a minimum, this must include—

(1) A description of the application and certification process, including—

(i) The availability of information about the process and application materials inaccessible formats;

(ii) The process for determining eligibility according to the provisions of §§ 37.123–37.125 of this part and notifying individuals of the determination made;

(iii) The entity's system and timetable for processing applications and allowing presumptive eligibility; and

(iv) The documentation given to eligible individuals.

(2) A description of the administrative appeals process for individuals denied eligibility.

(3) A policy for visitors, consistent with § 37.127 of this part.

(f) Description of the public participation process including—

(1) Notice given of opportunity for public comment, the date(s) of completed public hearing(s), availability of the plan in accessible formats, outreach efforts, and consultation with persons with disabilities.

(2) A summary of significant issues raised during the public comment period, along with a response to significant comments and discussion of how the issues were resolved.

(g) Efforts to coordinate service with other entities subject to the complementary paratransit requirements of this part which have overlapping or contiguous service areas or jurisdictions.

(h) The following endorsements or certifications:

(1) A resolution adopted by the board of the entity authorizing the plan, as submitted. If more than one entity is submitting the plan there must be an authorizing resolution from each board. If the entity does not function with a board, a statement shall be submitted by the entity's chief executive;

(2) In urbanized areas, certification by the Metropolitan Planning Organization (MPO) that it has reviewed the plan and that the plan is in conformance with the transportation plan developed under the Federal Transit/Federal Highway Administration joint planning regulation (49 CFR part 613 and 23 CFR part 450). In a service area which is covered by more than one MPO, each applicable MPO shall certify conformity of the entity's plan. The provisions of this paragraph do not apply to non-FTA recipients;

(3) A certification that the survey of existing paratransit service was conducted as required in § 37.137(a) of this part;

(4) To the extent service provided by other entities is included in the entity's plan for comparable paratransit service, the entity must certify that:

(i) ADA paratransit eligible individuals have access to the service;

(ii) The service is provided in the manner represented; and

(iii) Efforts will be made to coordinate the provision of paratransit service by other providers.

(i) A request for a waiver based on undue financial burden, if applicable. The waiver request should include information sufficient for FTA to consider the factors in § 37.155 of this part. If a request for an undue financial burden waiver is made, the plan must include a description of additional paratransit services that would be provided to achieve full compliance with the requirement for comparable paratransit in the event the waiver is not granted, and the timetable for the implementation of these additional services.

(j) *Annual plan updates.* (1) The annual plan updates submitted January 26, 1993, and annually thereafter, shall include information necessary to update the information requirements of this section. Information submitted annually must include all significant changes and revisions to the timetable for implementation;

(2) If the paratransit service is being phased in over more than one year, the entity must demonstrate that the milestones identified in the current paratransit plans have been achieved. If the milestones have not been achieved, the plan must explain any slippage and what actions are being taken to compensate for the slippage.

(3) The annual plan must describe specifically the means used to comply with the public participation requirements, as described in § 37.137 of this part.

§ 37.141 Requirements for a joint paratransit plan.

(a) Two or more entities with overlapping or contiguous service areas or jurisdictions may develop and submit a joint plan providing for coordinated paratransit service. Joint plans shall identify the participating entities and indicate their commitment to participate in the plan.

(b) To the maximum extent feasible, all elements of the coordinated plan shall be submitted on January 26, 1992. If a coordinated plan is not completed by January 26, 1992, those entities intending to coordinate paratransit service must submit a general statement declaring their intention to provide coordinated service and each element of the plan specified in § 37.139 to the extent practicable. In addition, the plan must include the following certifications from each entity involved in the coordination effort:

(1) A certification that the entity is committed to providing ADA paratransit service as part of a coordinated plan.

(2) A certification from each public entity participating in the plan that it will maintain current levels of paratransit service until the coordinated plan goes into effect.

(c) Entities submitting the above certifications and plan elements in lieu of a completed plan on January 26, 1992, must submit a complete plan by July 26, 1992.

(d) Filing of an individual plan does not preclude an entity from cooperating with other entities in the development or implementation of a joint plan. An entity wishing to join with other entities after its initial submission may do so by meeting the filing requirements of this section.

§ 37.143 Paratransit plan implementation.

(a) Each entity shall begin implementation of its complementary paratransit plan, pending notice from FTA. The implementation of the plan shall be consistent with the terms of the plan, including any specified phase-in period.

(b) If the plan contains a request for a wavier based on undue financial burden, the entity shall begin implementation of its plan, pending a determination on its waiver request.

§ 37.145 State comment on plans.

Each state required to receive plans under § 37.135 of this part shall:

(a) Ensure that all applicable section 18 and section 9 recipients have submitted plans.

(b) Certify to FTA that all plans have been received.

(c) Forward the required certification with comments on each plan to FTA. The plans, with comments, shall be submitted to FTA no later than April 1, 1992, for the first year and April 1 annually thereafter.

(d) The State shall develop comments to on each plan, responding to the following points:

(1) Was the plan filed on time?

(2) Does the plan appear reasonable?

(3) Are there circumstances that bear on the ability of the grantee to carry out the plan as represented? If yes, please elaborate.

(4) Is the plan consistent with statewide planning activities?

(5) Are the necessary anticipated financial and capital resources identified in the plan accurately estimated?

§ 37.147 Considerations during FTA review.

In reviewing each plan, at a minimum FTA will consider the following:

(a) Whether the plan was filed on time;

(b) Comments submitted by the state, if applicable;

(c) Whether the plan contains responsive elements for each component required under § 37.139 of this part;

(d) Whether the plan, when viewed in its entirety, provides for paratransit service comparable to the entity's fixed route service;

(e) Whether the entity complied with the public participation efforts required by this part; and

(f) The extent to which efforts were made to coordinate with other public entities with overlapping or contiguous service areas or jurisdictions.

§ 37.149 Disapproved plans.

(a) If a plan is disapproved in whole or in part, FTA will specify which provisions are disapproved. Each entity

shall amend its plan consistent with this information and resubmit the plan to the appropriate FTA Regional Office within 90 days of receipt of the disapproval letter.

(b) Each entity revising its plan shall continue to comply with the public participation requirements applicable to the initial development of the plan (set out in § 37.137 of this part).

§ 37.151 Waiver for undue financial burden.

If compliance with the service criteria of § 37.131 of this part creates an undue financial burden, an entity may request a waiver from all or some of the provisions if the entity has complied with the public participation requirements in § 37.137 of this part and if the following conditions apply:

(a) At the time of submission of the initial plan on January 26, 1992—

(1) The entity determines that it cannot meet all of the service criteria by January 26, 1997; or

(2) The entity determines that it cannot make measured progress toward compliance in any year before full compliance is required. For purposes of this part, measured progress means implementing milestones as scheduled, such as incorporating an additional paratransit service criterion or improving an aspect of a specific service criterion.

(b) At the time of its annual plan update submission, if the entity believes that circumstances have changed since its last submission, and it is no longer able to comply by January 26, 1997, or make measured progress in any year before 1997, as described in paragraph (a)(2) of this section.

§ 37.153 FTA waiver determination.

(a) The Administrator will determine whether to grant a waiver for undue financial burden on a case-by-case basis, after considering the factors identified in § 37.155 of this part and the information accompanying the request. If necessary, the Administrator will return the application with a request for additional information.

(b) Any waiver granted will be for a limited and specified period of time.

(c) If the Administrator grants the applicant a waiver, the Administrator will do one of the following:

(1) Require the public entity to provide complementary paratransit to the extent it can do so without incurring an undue financial burden. The entity shall make changes in its plan that the Administrator determines are appropriate to maximize the complementary paratransit service that is provided to ADA paratransit eligible individuals. When making changes to its plan, the entity shall use the public participation process specified for plan development and shall consider first a reduction in number of trips provided to each ADA paratransit eligible person per month, while attempting to meet all other service criteria.

(2) Require the public entity to provide basic complementary paratransit services to all ADA paratransit eligible individuals, even if doing so would cause the public entity to incur an undue financial burden. Basic complementary paratransit service in corridors defined as provided in § 37.131(a) along the public entity's key routes during core service hours.

(i) For purposes of this section, key routes are defined as routes along which there is service at least hourly throughout the day.

(ii) For purposes of this section, core service hours encompass at least peak periods, as these periods are defined locally for fixed route service, consistent with industry practice.

(3) If the Administrator determines that the public entity will incur an undue financial burden as the result of providing basic complementary paratransit service, such that it is infeasible for the entity to provide basic complementary paratransit service, the Administrator shall require the public entity to coordinate with other available providers of demand responsive service in the area served by the public entity to maximize the service to ADA paratransit eligible individuals to the maximum extent feasible.

§ 37.155 Factors in decision to grant an undue financial burden waiver.

(a) In making an undue financial burden determination, the FTA Administrator will consider the following factors:

(1) Effects on current fixed route service, including reallocation of accessible fixed route vehicles and potential reduction in service, measured by service miles;

(2) Average number of trips made by the entity's general population, on a per capita basis, compared with the average number of trips to be made by registered ADA paratransit eligible persons, on a per capita basis;

(3) Reductions in other services, including other special services;

(4) Increases in fares;

(5) Resources available to implement complementary paratransit service over the period covered by the plan;

(6) Percentage of budget needed to implement the plan, both as a percentage of operating budget and a percentage of entire budget;

(7) The current level of accessible service, both fixed route and paratransit;

(8) Cooperation/coordination among area transportation providers;

(9) Evidence of increased efficiencies, that have been or could be effectuated, that would benefit the level and quality of available resources for complementary paratransit service; and

(10) Unique circumstances in the submitting entity's area that affect the ability of the entity to provide paratransit, that militate against the need to provide paratransit, or in some other respect create a circumstance considered exceptional by the submitting entity.

(b)(1) Costs attributable to complementary paratransit shall be limited to costs of providing service specifically required by this part to ADA paratransit eligible individuals, by entities responsible under this part for providing such service.

(2) If the entity determines that it is impracticable to distinguish between trips mandated by the ADA and other trips on a trip-by-trip basis, the entity shall attribute to ADA complementary paratransit requirements a percentage of its overall paratransit costs. This percentage shall be determined by a statistically valid methodology that determines the percentage of trips that are required by this part. The entity shall submit information concerning its methodology and the data on which its percentage is based with its request for a waiver. Only costs attributable to ADA-mandated trips may be considered with respect to a request for an undue financial burden waiver.

(3) Funds to which the entity would be legally entitled, but which, as a matter of state or local funding arrangements, are provided to another entity and used by that entity to provide paratransit service which is part of a coordinated system of paratransit meeting the requirements of this part, may be counted in determining the burden associated with the waiver request.

§§ 37.157–37.159 [Reserved]

Subpart G—Provision of Service

§ 37.161 Maintenance of accessible features: General.

(a) Public and private entities providing transportation services shall maintain in operative condition those features of facilities and vehicles that are required to make the vehicles and facilities readily accessible to and usable by individuals with disabilities. These features include, but are not limited to, lifts and other means of access to vehicles, securement devices, elevators, signage and systems to facilitate communications with persons with impaired vision or hearing.

(b) Accessibility features shall be repaired promptly if they are damaged or out of order. When an accessibility feature is out of order, the entity shall take reasonable steps to accommodate individuals with disabilities who would otherwise use the feature.

(c) This section does not prohibit isolated or temporary interruptions in service or access due to maintenance or repairs.

§ 37.163 Keeping vehicle lifts in operative condition: Public entities.

(a) This section applies only to public entities with respect to lifts in non-rail vehicles.

(b) The entity shall establish a system of regular and frequent maintenance checks of lifts sufficient to determine if they are operative.

(c) The entity shall ensure that vehicle operators report to the entity, by the most immediate means available, any failure of a lift to operate in service.

(d) Except as provided in paragraph (e) of this section, when a lift is discovered to be inoperative, the entity shall take the vehicle out of service before the beginning of the vehicle's next service day and ensure that the lift is repaired before the vehicle returns to service.

(e) If there is no spare vehicle available to take the place of a vehicle with an inoperable lift, such that taking the vehicle out of service will reduce the transportation service the entity is able to provide, the public entity may keep the vehicle in service with an inoperable lift for no more than five days (if the entity serves an area of 50,000 or less population) or three days (if the entity serves an area of over 50,000 population) from the day on which the lift is discovered to be inoperative.

(f) In any case in which a vehicle is operating on a fixed route with an inoperative lift, and the headway to the next accessible vehicle on the route exceeds 30 minutes, the entity shall promptly provide alternative transportation to individuals with disabilities who are unable to use the vehicle because its lift does not work.

§ 37.165 Lift and securement use.

(a) This section applies to public and private entities.

(b) All common wheelchairs and their users shall be transported in the entity's vehicles or other conveyances. The entity is not required to permit wheelchairs to ride in places other than designated securement locations in the vehicle, where such locations exist.

(c)(1) For vehicles complying with part 38 of this title, the entity shall use the securement system to secure wheelchairs as provided in that Part.

(2) For other vehicles transporting individuals who use wheelchairs, the entity shall provide and use a securement system to ensure that the wheelchair remains within the securement area.

(3) The entity may require that an individual permit his or her wheelchair to be secured.

(d) The entity may not deny transportation to a wheelchair or its user on the ground that the device cannot be secured or restrained satisfactorily by the vehicle's securement system.

(e) The entity may recommend to a user of a wheelchair that the individual transfer to a vehicle seat. The entity may not require the individual to transfer.

(f) Where necessary or upon request, the entity's personnel shall assist individuals with disabilities with the use of securement systems, ramps and lifts. If it is necessary for the personnel to leave their seats to provide this assistance, they shall do so.

(g) The entity shall permit individuals with disabilities who do not use wheelchairs, including standees, to use a vehicle's lift or ramp to enter the vehicle. *Provided*, that an entity is not required to permit such individuals to use a lift Model 141 manufactured by EEC, Inc. If the entity chooses not to allow such individuals to use such a lift, it shall clearly notify consumers of this fact by signage on the exterior of the vehicle (adjacent to and of equivalent size with the accessibility symbol).

[56 FR 45621, Sept. 6, 1991, as amended at 58 FR 63103, Nov. 30, 1993]

§ 37.167 Other service requirements.

(a) This section applies to public and private entities.

(b) On fixed route systems, the entity shall announce stops as follows:

(1) The entity shall announce at least at transfer points with other fixed routes, other major intersections and destination points, and intervals along a route sufficient to permit individuals with visual impairments or other disabilities to be oriented to their location.

(2) The entity shall announce any stop on request of an individual with a disability.

(c) Where vehicles or other conveyances for more than one route serve the same stop, the entity shall provide a means by which an individual with a

visual impairment or other disability can identify the proper vehicle to enter or be identified to the vehicle operator as a person seeking a ride on a particular route.

(d) The entity shall permit service animals to accompany individuals with disabilities in vehicles and facilities.

(e) The entity shall ensure that vehicle operators and other personnel make use of accessibility-related equipment or features required by part 38 of this title.

(f) The entity shall make available to individuals with disabilities adequate information concerning transportation services. This obligation includes making adequate communications capacity available, through accessible formats and technology, to enable users to obtain information and schedule service.

(g) The entity shall not refuse to permit a passenger who uses a lift to disembark from a vehicle at any designated stop, unless the lift cannot be deployed, the lift will be damaged if it is deployed, or temporary conditions at the stop, not under the control of the entity, preclude the safe use of the stop by all passengers.

(h) The entity shall not prohibit an individual with a disability from traveling with a respirator or portable oxygen supply, consistent with applicable Department of Transportation rules on the transportation of hazardous materials (49 CFR subtitle B, chapter 1, subchapter C).

(i) The entity shall ensure that adequate time is provided to allow individuals with disabilities to complete boarding or disembarking from the vehicle.

(j)(1) When an individual with a disability enters a vehicle, and because of a disability, the individual needs to sit in a seat or occupy a wheelchair securement location, the entity shall ask the following persons to move in order to allow the individual with a disability to occupy the seat or securement location:

(i) Individuals, except other individuals with a disability or elderly persons, sitting in a location designated as priority seating for elderly and handicapped persons (or other seat as necessary);

(ii) Individuals sitting in or a fold-down or other movable seat in a wheelchair securement location.

(2) This requirement applies to light rail, rapid rail, and commuter rail systems only to the extent practicable.

(3) The entity is not required to enforce the request that other passengers move from priority seating areas or wheelchair securement locations.

(4) In all signage designating priority seating areas for elderly persons and persons with disabilities, or designating wheelchair securement areas, the entity shall include language informing persons sitting in these locations that they should comply with requests by transit provider personnel to vacate their seats to make room for an individual with a disability. This requirement applies to all fixed route vehicles when they are acquired by the entity or to new or replacement signage in the entity's existing fixed route vehicles.

[56 FR 45621, Sept. 6, 1991, as amended at 58 FR 63103, Nov. 30, 1993]

§ 37.169 Interim requirements for over-the-road bus service operated by private entities.

(a) Private entities operating over-the-road buses, in addition to compliance with other applicable provisions of this part, shall provide accessible service as provided in this section.

(b) The private entity shall provide assistance, as needed, to individuals with disabilities in boarding and disembarking, including moving to and from the bus seat for the purpose of boarding and disembarking. The private entity shall ensure that personnel are trained to provide this assistance safely and appropriately.

(c) To the extent that they can be accommodated in the areas of the passenger compartment provided for passengers' personal effects, wheelchairs or other mobility aids and assistive devices used by individuals with disabilities, or components of such devices, shall be permitted in the passenger compartment. When the bus is at rest at a stop, the driver or other personnel shall assist individuals with disabilities with the stowage and retrieval of mobility aids, assistive devices, or other items that can be accommodated

in the passenger compartment of the bus.

(d) Wheelchairs and other mobility aids or assistive devices that cannot be accommodated in the passenger compartment (including electric wheelchairs) shall be accommodated in the baggage compartment of the bus, unless the size of the baggage compartment prevents such accommodation.

(e) At any given stop, individuals with disabilities shall have the opportunity to have their wheelchairs or other mobility aids or assistive devices stowed in the baggage compartment before other baggage or cargo is loaded, but baggage or cargo already on the bus does not have to be off-loaded in order to make room for such devices.

(f) The entity may require up to 48 hours' advance notice only for providing boarding assistance. If the individual does not provide such notice, the entity shall nonetheless provide the service if it can do so by making a reasonable effort, without delaying the bus service.

§ 37.171 Equivalency requirement for demand responsive service operated by private entities not primarily engaged in the business of transporting people.

A private entity not primarily engaged in the business of transporting people which operates a demand responsive system shall ensure that its system, when viewed in its entirety, provides equivalent service to individuals with disabilities, including individuals who use wheelchairs, as it does to individuals without disabilities. The standards of § 37.105 shall be used to determine if the entity is providing equivalent service.

§ 37.173 Training requirements.

Each public or private entity which operates a fixed route or demand responsive system shall ensure that personnel are trained to proficiency, as appropriate to their duties, so that they operate vehicles and equipment safely and properly assist and treat individuals with disabilities who use the service in a respectful and courteous way, with appropriate attention to the difference among individuals with disabilities.

Subpart H—Over-the-Road Buses (OTRBs)

SOURCE: 63 FR 51690, Sept. 28, 1998, unless otherwise noted.

§ 37.181 Applicability dates.

This subpart applies to all private entities that operate OTRBs. The requirements of the subpart begin to apply to large operators beginning October 30, 2000 and to small operators beginning October 29, 2001.

§ 37.183 Purchase or lease of new OTRBs by operators of fixed-route systems.

The following requirements apply to private entities that are primarily in the business of transporting people, whose operations affect commerce, and that operate a fixed-route system, with respect to OTRBs delivered to them on or after the date on which this subpart applies to them:

(a) *Large operators.* If a large entity operates a fixed-route system, and purchases or leases a new OTRB for or in contemplation of use in that system, it shall ensure that the vehicle is readily accessible to and usable by individuals with disabilities, including individuals who use wheelchairs.

(b) *Small operators.* If a small entity operates a fixed-route system, and purchases or leases a new OTRB for or in contemplation of use in that system, it must do one of the following two things:

(1) Ensure that the vehicle is readily accessible to and usable by individuals with disabilities, including individuals who use wheelchairs; or

(2) Ensure that equivalent service, as defined in § 37.105, is provided to individuals with disabilities, including individuals who use wheelchairs. To meet this equivalent service standard, the service provided by the operator must permit a wheelchair user to travel in his or her own mobility aid.

§ 37.185 Fleet accessibility requirement for OTRB fixed-route systems of large operators.

Each large operator subject to the requirements of § 37.183 shall ensure that—

(a) By October 30, 2006 no less than 50 percent of the buses in its fleet with which it provides fixed-route service are readily accessible to and usable by individuals with disabilities, including individuals who use wheelchairs.

(b) By October 29, 2012, 100 percent of the buses in its fleet with which it provides fixed-route service are readily accessible to and usable by individuals with disabilities, including individuals who use wheelchairs.

(c) *Request for time extension.* An operator may apply to the Secretary for a time extension of the fleet accessibility deadlines of this section. If he or she grants the request, the Secretary sets a specific date by which the operator must meet the fleet accessibility requirement. In determining whether to grant such a request, the Secretary considers the following factors:

(1) Whether the operator has purchased or leased, since October 30, 2000, enough new OTRBs to replace 50 percent of the OTRBs with which it provides fixed-route service by October 30, 2006 or 100 percent of such OTRBs by October 29, 2012;

(2) Whether the operator has purchased or leased, between October 28, 1998 and October 30, 2000, a number of new inaccessible OTRBs significantly exceeding the number of buses it would normally obtain in such a period;

(3) The compliance with all requirements of this part by the operator over the period between October 28, 1998 and the request for time extension.

§ 37.187 Interline service.

(a) When the general public can purchase a ticket or make a reservation with one operator for a fixed-route trip of two or more stages in which another operator provides service, the first operator must arrange for an accessible bus, or equivalent service, as applicable, to be provided for each stage of the trip to a passenger with a disability. The following examples illustrate the provisions of this paragraph (a):

Example 1. By going to Operator X's ticket office or calling X for a reservation, a passenger can buy or reserve a ticket from Point A through to Point C, transferring at intermediate Point B to a bus operated by Operator Y. Operator X is responsible for communicating immediately with Operator Y to ensure that Y knows that a passenger needing accessible transportation or equivalent service, as applicable, is traveling from Point B to Point C. By immediate communication, we mean that the ticket or reservation agent for Operator X, by phone, fax, computer, or other instantaneous means, contacts Operator Y the minute the reservation or ticketing transaction with the passenger, as applicable, has been completed. It is the responsibility of each carrier to know how to contact carriers with which it interlines (e.g., Operator X must know Operator Y's phone number).

Example 2. Operator X fails to provide the required information in a timely manner to Operator Y. Operator X is responsible for compensating the passenger for the consequent unavailability of an accessible bus or equivalent service, as applicable, on the B-C leg of the interline trip.

(b) Each operator retains the responsibility for providing the transportation required by this subpart to the passenger for its portion of an interline trip. The following examples illustrate the provisions of this paragraph (b):

Example 1. In Example 1 to paragraph (a) of this section, Operator X provides the required information to Operator Y in a timely fashion. However, Operator Y fails to provide an accessible bus or equivalent service to the passenger at Point B as the rules require. Operator Y is responsible for compensating the passenger as provided in § 37. 199.

Example 2. Operator X provides the required information to Operator Y in a timely fashion. However, the rules require Operator Y to provide an accessible bus on 48 hours' advance notice (i.e., as a matter of interim service under § 37.193(a) or service by a small mixed-service operator under § 37.191), and the passenger has purchased the ticket or made the reservation for the interline trip only 8 hours before Operator Y's bus leaves from Point B to go to Point C. In this situation, Operator Y is not responsible for providing an accessible bus to the passenger at Point B, any more than that it would be had the passenger directly contacted Operator Y to travel from Point B to Point C.

(c) All fixed-route operators involved in interline service shall ensure that they have the capacity to receive communications at all times concerning interline service for passengers with disabilities. The following examples illustrate the provisions of this paragraph (c):

Example 1. Operator Y's office is staffed only during normal weekday business hours. Operator Y must have a means of receiving communications from carriers with which it

interlines (e.g., telephone answering machine, fax, computer) when no one is in the office.

Example 2. Operator Y has the responsibility to monitor its communications devices at reasonable intervals to ensure that it can act promptly on the basis of messages received. If Operator Y receives a message from Operator X on its answering machine on Friday night, notifying Y of the need for an accessible bus on Monday morning, it has the responsibility of making sure that the accessible bus is there on Monday morning. Operator Y is not excused from its obligation because no one checked the answering machine over the weekend.

§ 37.189 Service requirement for OTRB demand-responsive systems.

(a) This section applies to private entities primarily in the business of transporting people, whose operations affect commerce, and that provide demand-responsive OTRB service. Except as needed to meet the other requirements of this section, these entities are not required to purchase or lease accessible buses in connection with providing demand-responsive service.

(b) Demand-responsive operators shall ensure that, beginning one year from the date on which the requirements of this subpart begin to apply to the entity, any individual with a disability who requests service in an accessible OTRB receives such service. This requirement applies to both large and small operators.

(c) The operator may require up to 48 hours' advance notice to provide this service.

(d) If the individual with a disability does not provide the advance notice the operator requires under paragraph (a) of this section, the operator shall nevertheless provide the service if it can do so by making a reasonable effort.

(e) To meet this requirement, an operator is not required to fundamentally alter its normal reservation policies or to displace another passenger who has reserved a seat on the bus. The following examples illustrate the provisions of this paragraph (e):

Example 1. A tour bus operator requires all passengers to reserve space on the bus three months before the trip date. This requirement applies to passengers with disabilities on the same basis as other passengers. Consequently, an individual passenger who is a wheelchair user would have to request an accessible bus at the time he or she made his reservation, at least three months before the trip date. If the individual passenger with a disability makes a request for space on the trip and an accessible OTRB 48 hours before the trip date, the operator could refuse the request because all passengers were required to make reservations three months before the trip date.

Example 2. A group makes a reservation to charter a bus for a trip four weeks in advance. A week before the trip date, the group discovers that someone who signed up for the trip is a wheelchair user who needs an accessible bus, or someone who later buys a seat in the block of seats the group has reserved needs an accessible bus. A group representative or the passenger with a disability informs the bus company of this need more than 48 hours before the trip date. The bus company must provide an accessible bus.

Example 3. While the operator's normal deadline for reserving space on a charter or tour trip has passed, a number of seats for a trip are unfilled. The operator permits members of the public to make late reservations for the unfilled seats. If a passenger with a disability calls 48 hours before the trip is scheduled to leave and requests a seat and the provision of an accessible OTRB, the operator must meet this request, as long as it does not displace another passenger with a reservation.

Example 4. A tour bus trip is nearly sold out three weeks in advance of the trip date. A passenger with a disability calls 48 hours before the trip is scheduled to leave and requests a seat and the provision of an accessible OTRB. The operator need not meet this request if it will have the effect of displacing a passenger with an existing reservation. If other passengers would not be displaced, the operator must meet this request.

§ 37.191 Special provision for small mixed-service operators.

(a) For purposes of this section, a small mixed-service operator is a small operator that provides both fixed-route and demand-responsive service and does not use more than 25 percent of its buses for fixed-route service.

(b) An operator meeting the criteria of paragraph (a) of this section may conduct all its trips, including fixed-route trips, on an advance-reservation basis as provided for demand-responsive trips in § 37.189. Such an operator is not required to comply with the accessible bus acquisition/equivalent service obligations of § 37.183(b).

§ 37.193 Interim service requirements.

(a) Until 100 percent of the fleet of a large or small operator uses to provide fixed-route service is composed of accessible OTRBs, the operator shall meet the following interim service requirements:

(1) Beginning one year from the date on which the requirements of this subpart begin to apply to the operator, it shall ensure that any individual with a disability that requests service in an accessible OTRB receives such service.

(i) The operator may require up to 48 hours' advance notice to provide this service.

(ii) If the individual with a disability does not provide the advance notice the operator requires, the operator shall nevertheless provide the service if it can do so by making a reasonable effort.

(iii) If the trip on which the person with a disability wishes to travel is already provided by an accessible bus, the operator has met this requirement.

(2) Before a date one year from the date on which this subpart applies to the operator, an operator which is unable to provide the service specified in paragraph (a) of this section shall comply with the requirements of § 37.169.

(3) Interim service under this paragraph (a) is not required to be provided by a small operator who is providing equivalent service to its fixed-route service as provided in § 37.183(b)(2).

(b) Some small fixed-route operators may never have a fleet 100 percent of which consists of accessible buses (e.g., a small fixed-route operator who exclusively or primarily purchases or leases used buses). Such an operator must continue to comply with the requirements of this section with respect to any service that is not provided entirely with accessible buses.

(c) Before a date one year from the date on which this subpart applies to an operator providing demand-responsive service, an operator which is unable to provide the service described in § 37.189 shall comply with the requirements of § 37.169.

§ 37.195 Purchase or lease of OTRBs by private entities not primarily in the business of transporting people.

This section applies to all purchases or leases of new vehicles by private entities which are not primarily engaged in the business of transporting people, with respect to buses delivered to them on or after the date on which this subpart begins to apply to them.

(a) *Fixed-route systems.* If the entity operates a fixed-route system and purchases or leases an OTRB for or in contemplation of use on the system, it shall meet the requirements of § 37.183 (a) or (b), as applicable.

(b) *Demand-responsive systems.* The requirements of § 37.189 apply to demand-responsive systems operated by private entities not primarily in the business of transporting people. If such an entity operates a demand-responsive system, and purchases or leases an OTRB for or in contemplation of use on the system, it is not required to purchase or lease an accessible bus except as needed to meet the requirements of § 37.189.

§ 37.197 Remanufactured OTRBs.

(a) This section applies to any private entity operating OTRBs that takes one of the following actions:

(1) On or after the date on which this subpart applies to the entity, it remanufactures an OTRB so as to extend its useful life for five years or more or makes a solicitation for such remanufacturing; or

(2) Purchases or leases an OTRB which has been remanufactured so as to extend its useful life for five years or more, where the purchase or lease occurs after the date on which this subpart applies to the entity and during the period in which the useful life of the vehicle is extended.

(b) In any situation in which this subpart requires an entity purchasing or leasing a new OTRB to purchase or lease an accessible OTRB, OTRBs acquired through the actions listed in paragraph (a) of this section shall, to the maximum extent feasible, be readily accessible to and usable by individuals with disabilities, including individuals who use wheelchairs.

(c) For purposes of this section, it shall be considered feasible to remanufacture an OTRB so as to be readily accessible to and usable by individuals with disabilities, including individuals who use wheelchairs, unless an engineering analysis demonstrates that including accessibility features required by this part would have a significant adverse effect on the structural integrity of the vehicle.

§ 37.199 [Reserved]

§ 37.201 Intermediate and rest stops.

(a) Whenever an OTRB makes an intermediate or rest stop, a passenger with a disability, including an individual using a wheelchair, shall be permitted to leave and return to the bus on the same basis as other passengers. The operator shall ensure that assistance is provided to passengers with disabilities as needed to enable the passenger to get on and off the bus at the stop (e.g., operate the lift and provide assistance with securement; provide other boarding assistance if needed, as in the case of a wheelchair user who has transferred to a vehicle seat because other wheelchair users occupied all securement locations).

(b) If an OTRB operator owns, leases, or controls the facility at which a rest or intermediate stop is made, or if an OTRB operator contracts with the person who owns, leases, or controls such a facility to provide rest stop services, the OTRB operator shall ensure the facility complies fully with applicable requirements of the Americans with Disabilities Act.

(c) If an OTRB equipped with an inaccessible restroom is making an express run of three hours or more without a rest stop, and a passenger with a disability who is unable to use the inaccessible restroom requests an unscheduled rest stop, the operator shall make a good faith effort to accommodate the request. The operator is not required to make the stop. However, if the operator does not make the stop, the operator shall explain to the passenger making the request the reason for its decision not to do so.

§ 37.203 Lift maintenance.

(a) The entity shall establish a system of regular and frequent maintenance checks of lifts sufficient to determine if they are operative.

(b) The entity shall ensure that vehicle operators report to the entity, by the most immediate means available, any failure of a lift to operate in service.

(c) Except as provided in paragraph (d) of this section, when a lift is discovered to be inoperative, the entity shall take the vehicle out of service before the beginning of the vehicle's next trip and ensure that the lift is repaired before the vehicle returns to service.

(d) If there is no other vehicle available to take the place of an OTRB with an inoperable lift, such that taking the vehicle out of service before its next trip will reduce the transportation service the entity is able to provide, the entity may keep the vehicle in service with an inoperable lift for no more than five days from the day on which the lift is discovered to be inoperative.

§ 37.205 Additional passengers who use wheelchairs.

If a number of wheelchair users exceeding the number of securement locations on the bus seek to travel on a trip, the operator shall assign the securement locations on a first come-first served basis. The operator shall offer boarding assistance and the opportunity to sit in a vehicle seat to passengers who are not assigned a securement location. If the passengers who are not assigned securement locations are unable or unwilling to accept this offer, the operator is not required to provide transportation to them on the bus.

§ 37.207 Discriminatory practices.

It shall be considered discrimination for any operator to—

(a) Deny transportation to passengers with disabilities, except as provided in § 37.5(h);

(b) Use or request the use of persons other than the operator's employees (e.g., family members or traveling companions of a passenger with a disability, medical or public safety personnel) for routine boarding or other

assistance to passengers with disabilities, unless the passenger requests or consents to assistance from such persons;

(c) Require or request a passenger with a disability to reschedule his or her trip, or travel at a time other than the time the passenger has requested, in order to receive transportation as required by this subpart;

(d) Fail to provide reservation services to passengers with disabilities equivalent to those provided other passengers; or

(e) Fail or refuse to comply with any applicable provision of this part.

§ 37.209 Training and other requirements.

OTRB operators shall comply with the requirements of §§ 37.161, 37.165–37.167, and 37.173. For purposes of § 37.173, ''training to proficiency'' is deemed to include, as appropriate to the duties of particular employees, training in proper operation and maintenance of accessibility features and equipment, boarding assistance, securement of mobility aids, sensitive and appropriate interaction with passengers with disabilities, handling and storage of mobility devices, and familiarity with the requirements of this subpart. OTRB operators shall provide refresher training to personnel as needed to maintain proficiency.

§ 37.211 Effect of NHTSA and FHWA safety rules.

OTRB operators are not required to take any action under this subpart that would violate an applicable National Highway Traffic Safety Administration or Federal Highway Administration safety rule.

§ 37.213 Information collection requirements.

(a) This paragraph (a) applies to demand-responsive operators under § 37.189 and fixed-route operators under § 37.193(a)(1) that are required to, and small mixed-service operators under § 37.191 that choose to, provide accessible OTRB service on 48 hours' advance notice.

(1) When the operator receives a request for an accessible bus or equivalent service, the operator shall complete lines 1–9 of the Service Request Form in Appendix A to this subpart. The operator shall transmit a copy of the form to the passenger no later than the end of the next business day following the receipt of the request. The passenger shall be required to make only one request, which covers all legs of the requested trip (e.g., in the case of a round trip, both the outgoing and return legs of the trip; in the case of a multi-leg trip, all connecting legs).

(2) The passenger shall be required to make only one request, which covers all legs of the requested trip (*e.g.*, in the case of a round trip, both the outgoing and return legs of the trip; in the case of a multi-leg trip, all connecting legs). The operator shall transmit a copy of the form to the passenger in one of the following ways:

(i) By first-class United States mail. The operator shall transmit the form no later than the end of the next business day following the request;

(ii) By telephone or email. If the passenger can receive the confirmation by this method, then the operator shall provide a unique confirmation number to the passenger when the request is made and provide a paper copy of the form when the passenger arrives for the requested trip; or

(iii) By facsimile transmission. If the passenger can receive the confirmation by this method, then the operator shall transmit the form within twenty-four hours of the request for transportation.

(3) The operator shall retain its copy of the completed form for five years. The operator shall make these forms available to Department of Transportation or Department of Justice officials at their request.

(4) Beginning October 29, 2001, for large operators, and October 28, 2002, for small operators, and on the last Monday in October in each year thereafter, each operator shall submit a summary of its forms to the Department of Transportation. The summary shall state the number of requests for accessible bus service and the number of times these requests were met. It shall also include the name, address, telephone number, and contact person name for the operator.

(b) This paragraph (b) applies to small fixed route operators who choose

to provide equivalent service to passengers with disabilities under §37.183(b)(2).

(1) The operator shall complete the Service Request Form in Appendix A to this subpart on every occasion on which a passenger with a disability needs equivalent service in order to be provided transportation.

(2) The passenger shall be required to make only one request, which covers all legs of the requested trip (*e.g.*, in the case of a round trip, both the outgoing and return legs of the trip; in the case of a multi-leg trip, all connecting legs). The operator shall transmit a copy of the form to the passenger, and whenever the equivalent service is not provided, in one of the following ways:

(i) By first-class United States mail. The operator shall transmit the form no later than the end of the next business day following the request for equivalent service;

(ii) By telephone or email. If the passenger can receive the confirmation by this method, then the operator shall provide a unique confirmation number to the passenger when the request for equivalent service is made and provide a paper copy of the form when the passenger arrives for the requested trip; or

(iii) By facsimile transmission. If the passenger can receive the confirmation by this method, then the operator shall transmit the form within twenty-four hours of the request for equivalent service.

(3) Beginning on October 28, 2002 and on the last Monday in October in each year therafter, each operator shall submit a summary of its forms to the Department of Transportation. The summary shall state the number of situations in which equivalent service was needed and the number of times such service was provided. It shall also include the name, address, telephone number, and contact person name for the operator.

(c) This paragraph (c) applies to fixed-route operators.

(1) On March 26, 2001, each fixed-route large operator shall submit to the Department a report on how many passengers with disabilities used the lift to board accessible buses for the period of October 1999 to October 2000. For fixed-route operators, the report shall reflect separately the data pertaining to 48-hour advance reservation service and other service.

(2) Beginning on October 29, 2001 and on the last Monday in October in each year thereafter, each fixed-route operator shall submit to the Department, a report on how many passengers with disabilities used the lift to board accessible buses. For fixed-route operators, the report shall reflect separately the data pertaining to 48-hour advance reservation service and other service.

(d) This paragraph (d) applies to each over the road bus operator.

(1) On March 26, 2001, each operator shall submit to the Department, a summary report listing the number of new buses and used buses it has purchased or leased for the period of October 1998 through October 2000, and how many buses in each category are accessible. It shall also include the total number of buses in the operator's fleet and the name, address, telephone number, and contact person name for the operator.

(2) Beginning on October 29, 2001 and on the last Monday in October in each year thereafter, each operator shall submit to the Department, a summary report listing the number of new buses and used buses it has purchased or leased during the preceding year, and how many buses in each category are accessible. It shall also include the total number of buses in the operator's fleet and the name, address, telephone number, and contact person name for the operator.

(e) The information required to be submitted to the Department shall be sent to the following address: Federal Motor Carrier Safety Administration, Office of Data Analysis & Information System 1200 New Jersey Avenue, SE., Washington, D.C. 20590.

[66 FR 9053, Feb. 6, 2001, as amended at 69 FR 40796, July 7, 2004; 73 FR 33329, June 12, 2008]

§37.215 Review of requirements.

(a) Beginning October 28, 2005, the Department will review the requirements of §37.189 and their implementation. The Department will complete this review by October 30, 2006.

(1) As part of this review, the Department will consider factors including, but not necessarily limited to, the following:

(i) The percentage of accessible buses in the demand-responsive fleets of large and small demand-responsive operators.

(ii) The success of small and large demand-responsive operators' service at meeting the requests of passengers with disabilities for accessible buses in a timely manner.

(iii) The ridership of small and large operators' demand-responsive service by passengers with disabilities.

(iv) The volume of complaints by passengers with disabilities.

(v) Cost and service impacts of implementation of the requirements of §37.189.

(2) The Department will make one of the following decisions on the basis of the review:

(i) Retain §37.189 without change; or

(ii) Modify the requirements of §37.189 for large and/or small demand-responsive operators.

(b) Beginning October 30, 2006, the Department will review the requirements of §§37.183, 37.185, 37.187, 37.191 and 37.193(a) and their implementation. The Department will complete this review by October 29, 2007.

(1) As part of this review, the Department will consider factors including, but not necessarily limited to, the following:

(i) The percentage of accessible buses in the fixed-route fleets of large and small fixed-route operators.

(ii) The success of small and large fixed-route operators' interim or equivalent service at meeting the requests of passengers with disabilities for accessible buses in a timely manner.

(iii) The ridership of small and large operators' fixed-route service by passengers with disabilities.

(iv) The volume of complaints by passengers with disabilities.

(v) Cost and service impacts of implementation of the requirements of these sections.

(2) The Department will make one of the following decisions on the basis of the review:

(i) Retain §§37.183, 37.185, 37.187, 37.191, 37.193(a) without change; or

(ii) Modify the requirements of §§37.183, 37.185, 37.187, 37.191, 37.193(a) for large and/or small fixed-route operators.

APPENDIX A TO SUBPART H OF PART 37—SERVICE REQUEST FORM

Form for Advance Notice Requests and Provision of Equivalent Service

1. Operator's name _____
2. Address _____
_____
3. Phone number: _____
4. Passenger's name: _____
5. Address: _____
_____
6. Phone number: _____
7. Scheduled date(s) and time(s) of trip(s): _____
_____
8. Date and time of request: _____
9. Location(s) of need for accessible bus or equivalent service, as applicable: _____
10. Was accessible bus or equivalent service, as applicable, provided for trip(s)? Yes _____ no _____
11. Was there a basis recognized by U.S. Department of transportation regulations for not providing an accessible bus or equivalent service, as applicable, for the trip(s)? Yes _____ no _____

If yes, explain _____
_____

[66 FR 9054, Feb. 6, 2001]

APPENDIX A TO PART 37—MODIFICATIONS TO STANDARDS FOR ACCESSIBLE TRANSPORTATION FACILITIES

The Department of Transportation, in §37.9 of this part, adopts as its regulatory standards for accessible transportation facilities the revised Americans with Disabilities Act Guidelines (ADAGG) issued by the Access Board on July 23, 2004. The ADAGG is codified in the Code of Federal Regulations in Appendices B and D of 36 CFR part 1191. Note the ADAAG may also be found via a hyperlink on the Internet at the following address: *http://www.access-board.gov/ada-aba/final.htm*. Like all regulations, the ADAAG also can be found by using the electronic Code of Federal Regulations at *http://www.gpoaccess.gov/ecfr*. Because the ADAAG has been established as a Federal consensus standard by the Access Board, the Department is not republishing the regulations in their entirety, but is adopting them by cross-reference as permitted under 1 CFR 21.21(c)(4). In a few instances, the Department has modified the language of the ADAAG as it applies to entities subject to 49 CFR part 37. These entities must comply with the modified language in this Appendix rather than the language of Appendices B and D to 36 CFR part 1191.

206.3 LOCATION—MODIFICATION TO 206.3 OF APPENDIX B TO 36 CFR PART 1191

Accessible routes shall coincide with, or be located in the same area as general *circulation paths*. Where *circulation paths* are interior, required *accessible* routes shall also be interior. Elements such as ramps, elevators, or other circulation devices, fare vending or other ticketing areas, and fare collection areas shall be placed to minimize the distance which wheelchair users and other persons who cannot negotiate steps may have to travel compared to the general public.

406.8—MODIFICATION TO 406 OF APPENDIX D TO 36 CFR PART 1191

A curb ramp shall have a detectable warning complying with 705. The detectable warning shall extend the full width of the curb ramp (exclusive of flared sides) and shall extend either the full depth of the curb ramp or 24 inches (610 mm) deep minimum measured from the back of the curb on the ramp surface.

810.2.2 DIMENSIONS—MODIFICATION TO 810.2.2 OF APPENDIX D TO 36 CFR PART 1191

Bus boarding and alighting areas shall provide a clear length of 96 inches (2440 mm), measured perpendicular to the curb or vehicle roadway edge, and a clear width of 60 inches (1525 mm), measured parallel to the vehicle roadway. Public entities shall ensure that the construction of bus boarding and alighting areas comply with 810.2.2, to the extent the construction specifications are within their control.

810.5.3 PLATFORM AND VEHICLE FLOOR COORDINATION—MODIFICATION TO 810.5.3 OF APPENDIX D TO 36 CFR PART 1191

Station platforms shall be positioned to coordinate with vehicles in accordance with the applicable requirements of 36 CFR part 1192. Low-level platforms shall be 8 inches (205 mm) minimum above top of rail. In light rail, commuter rail, and intercity rail systems where it is not operationally or structurally feasible to meet the horizontal gap or vertical difference requirements of part 1192 or 49 CFR part 38, mini-high platforms, carborne or platform-mounted lifts, ramps or bridge plates or similarly manually deployed devices, meeting the requirements of 49 CFR part 38, shall suffice.

EXCEPTION: Where vehicles are boarded from sidewalks or street-level, low-level platforms shall be permitted to be less than 8 inches (205 mm).

[71 FR 63266, Oct. 30, 2006]

APPENDIX B TO PART 37—FTA REGIONAL OFFICES

Region I, Federal Transit Administration, 206 Federal Plaza, Suite 2940, New York, NY 10278

Region II, Federal Transit Administration, Transportation Systems Center, Kendall Square, 55 Broadway, Suite 921, Cambridge, MA 02142

Region III, Federal Transit Administration, 841 Chestnut Street, Suite 714, Philadelphia, PA 19107

Region IV, Federal Transit Administration, 1720 Peachtree Road NW., Suite 400, Atlanta, GA 30309

Region V, Federal Transit Administration, 55 East Monroe Street, Room 1415, Chicago, IL 60603

Region VI, Federal Transit Administration, 819 Taylor Street, Suite 9A32, Ft. Worth, TX 76102

Region VII, Federal Transit Administration, 6301 Rockville Road, Suite 303, Kansas City, MS 64131

Region VIII, Federal Transit Administration, Federal Office Building, 1961 Stout Street, 5th Floor, Denver, CO 80294

Region IX, Federal Transit Administration, 211 Main Street, Room 1160, San Francisco, CA 94105

Region X, Federal Transit Administration, 3142 Federal Building, 915 Second Avenue, Seattle, WA 98174

APPENDIX C TO PART 37—CERTIFICATIONS

Certification of Equivalent Service

The (name of agency) certifies that its demand responsive service offered to individuals with disabilities, including individuals who use wheelchairs, is equivalent to the level and quality of service offered to individuals without disabilities. Such service, when viewed in its entirety, is provided in the most integrated setting feasible and is equivalent with respect to:

(1) Response time;

(2) Fares;

(3) Geographic service area;

(4) Hours and days of service;

(5) Restrictions on trip purpose;

(6) Availability of information and reservation capability; and

(7) Constraints on capacity or service availability.

In accordance with 49 CFR 37.77, public entities operating demand responsive systems for the general public which receive financial assistance under section 18 of the Federal Transit Act must file this certification with the appropriate state program office before procuring any inaccessible vehicle. Such public entities not receiving FTA funds shall

also file the certification with the appropriate state program office. Such public entities receiving FTA funds under any other section of the FT Act must file the certification with the appropriate FTA regional office. This certification is valid for no longer than one year from its date of filing.

(name of authorized official)

(title)

(signature)

MPO Certification of Paratransit Plan

The (name of Metropolitan Planning Organization) hereby certifies that it has reviewed the ADA paratransit plan prepared by (name of submitting entity (ies)) as required under 49 CFR part 37. 139(h) and finds it to be in conformance with the transportation plan developed under 49 CFR part 613 and 23 CFR part 450 (the FTA/FHWA joint planning regulation). This certification is valid for one year.

signature

name of authorized official

title

date

Existing Paratransit Service Survey

This is to certify that (name of public entity (ies)) has conducted a survey of existing paratransit services as required by 49 CFR 37.137 (a).

signature

name of authorized official

title

date

Included Service Certification

This is to certify that service provided by other entities but included in the ADA paratransit plan submitted by (name of submitting entity (ies)) meets the requirements of 49 CFR part 37, subpart F providing that ADA eligible individuals have access to the service; the service is provided in the manner represented; and, that efforts will be made to coordinate the provision of paratransit service offered by other providers.

signature

name of authorized official

title

date

Joint Plan Certification I

This is to certify that (name of entity covered by joint plan) is committed to providing ADA paratransit service as part of this coordinated plan and in conformance with the requirements of 49 CFR part 37, subpart F.

signature

name of authorized official

title

date

Joint Plan Certification II

This is to certify that (name of entity covered by joint plan) will, in accordance with 49 CFR 37.141, maintain current levels of paratransit service until the coordinated plan goes into effect.

signature

name of authorized official

title

date

State Certification that Plans have been Received

This is to certify that all ADA paratransit plans required under 49 CFR 37.139 have been received by (state DOT)

signature

name of authorized official

title

date

APPENDIX D TO PART 37—CONSTRUCTION AND INTERPRETATION OF PROVISIONS OF 49 CFR PART 37

This appendix explains the Department's construction and interpretation of provisions of 49 CFR part 37. It is intended to be used as definitive guidance concerning the meaning and implementation of these provisions. The appendix is organized on a section-by-section basis. Some sections of the rule are not discussed in the appendix, because they are self-

explanatory or we do not currently have interpretive material to provide concerning them.

The Department also provides guidance by other means, such as manuals and letters. The Department intends to update this Appendix periodically to include guidance, provided in response to inquiries about specific situations, that is of general relevance or interest.

AMENDMENTS TO 49 CFR PART 27

Section 27.67(d) has been revised to reference the Access Board facility guidelines (found in appendix A to part 37) as well as the Uniform Federal Accessibility Standard (UFAS). This change was made to ensure consistency between requirements under section 504 and the ADA. Several caveats relating to the application of UFAS (e.g., that spaces not used by the public or likely to result in the employment of individuals with disabilities would not have to meet the standards) have been deleted. It is the Department's understanding that provisions of the Access Board standards and part 37 make them unnecessary.

The Department is aware that there is a transition period between the publication of this rule and the effective date of many of its provisions (e.g., concerning facilities and paratransit services) during which section 504 remains the basic authority for accessibility modifications. In this interval, the Department expects recipients' compliance with section 504 to look forward to compliance with the ADA provisions. That is, if a recipient is making a decision about the shape of its paratransit service between the publication of this rule and January 26, 1992, the decision should be in the direction of service that will help to comply with post-January 1992 requirements. A recipient that severely curtailed its present paratransit service in October, and then asked for a three- or five-year phase-in of service under its paratransit plan, would not be acting consistent with this policy.

Likewise, the Department would view with disfavor any attempt by a recipient to accelerate the beginning of the construction, installation or alteration of a facility to before January 26, 1992, to ''beat the clock'' and avoid the application of this rule's facility standards. The Department would be very reluctant to approve grants, contracts, exemption requests etc., that appear to have this effect. The purpose of the Department's administration of section 504 is to ensure compliance with the national policy stated in the ADA, not to permit avoidance of it.

SUBPART A—GENERAL

Section 37.3 Definitions

The definition of ''commuter authority'' includes a list of commuter rail operators drawn from a statutory reference in the ADA. It should be noted that this list is not exhaustive. Other commuter rail operators (e.g., in Chicago or San Francisco) would also be encompassed by this definition.

The definition of ''commuter bus service'' is important because the ADA does not require complementary paratransit to be provided with respect to commuter bus service operated by public entities. The rationale that may be inferred for the statutory exemption for this kind of service concerns its typical characteristics (e.g., no attempt to comprehensively cover a service area, limited route structure, limited origins and destinations, interface with another mode of transportation, limited purposes of travel). These characteristics can be found in some transportation systems other than bus systems oriented toward work trips. For example, bus service that is used as a dedicated connecter to commuter or intercity rail service, certain airport shuttles, and university bus systems share many or all of these characteristics. As explained further in the discussion of subpart B, the Department has determined that it is appropriate to cover these services with the requirements applicable to commuter bus systems.

The definitions of ''designated public transportation'' and ''specified public transportation'' exclude transportation by aircraft. Persons interested in matters concerning access to air travel for individuals with disabilities should refer to 14 CFR part 382, the Department's regulation implementing the Air Carrier Access Act. Since the facility requirements of this part refer to facilities involved in the provision of designated or specified public transportation, airport facilities are not covered by this part. DOJ makes clear that public and private airport facilities are covered under its title II and title III regulations, respectively.

The examples given in the definition of ''facility'' all relate to ground transportation. We would point out that, since transportation by passenger vessels is covered by this rule and by DOJ rules, such vessel-related facilities as docks, wharfs, vessel terminals, etc. fall under this definition. It is intended that specific requirements for vessels and related facilities will be set forth in future rulemaking.

The definitions of ''fixed route system'' and ''demand responsive system'' derive directly from the ADA's definitions of these terms. Some systems, like a typical city bus system or a dial-a-ride van system, fit clearly into one category or the other. Other systems may not so clearly fall into one of the categories. Nevertheless, because how a system is categorized has consequences for the requirements it must meet, entities must determine, on a case-by-case basis, into which category their systems fall.

In making this determination, one of the key factors to be considered is whether the individual, in order to use the service, must request the service, typically by making a call.

With fixed route service, no action by the individual is needed to initiate public transportation. If an individual is at a bus stop at the time the bus is scheduled to appear, then that individual will be able to access the transportation system. With demand-reponsive service, an additional step must be taken by the individual before he or she can ride the bus, i.e., the individual must make a telephone call.

(S. Rept. 101–116 at 54).

Other factors, such as the presence or absence of published schedules, or the variation of vehicle intervals in anticipation of differences in usage, are less important in making the distinction between the two types of service. If a service is provided along a given route, and a vehicle will arrive at certain times regardless of whether a passenger actively requests the vehicle, the service in most cases should be regarded as fixed route rather than demand responsive.

At the same time, the fact that there is an interaction between a passenger and transportation service does not necessarily make the service demand responsive. For many types of service (e.g., intercity bus, intercity rail) which are clearly fixed route, a passenger has to interact with an agent to buy a ticket. Some services (e.g., certain commuter bus or commuter rail operations) may use flag stops, in which a vehicle along the route does not stop unless a passenger flags the vehicle down. A traveler staying at a hotel usually makes a room reservation before hopping on the hotel shuttle. This kind of interaction does not make an otherwise fixed route service demand responsive.

On the other hand, we would regard a system that permits user-initiated deviations from routes or schedules as demand-responsive. For example, if a rural public transit system (e.g., a section 18 recipient) has a few fixed routes, the fixed route portion of its system would be subject to the requirements of subpart F for complementary paratransit service. If the entity changed its system so that it operated as a route-deviation system, we would regard it as a demand responsive system. Such a system would not be subject to complementary paratransit requirements.

The definition of ''individual with a disability'' excludes someone who is currently engaging in the illegal use of drugs, when a covered entity is acting on the basis of such use. This concept is more important in employment and public accommodations contexts than it is in transportation, and is discussed at greater length in the DOJ and EEOC rules. Essentially, the definition says that, although drug addiction (i.e., the status or a diagnosis of being a drug abuser) is a disability, no one is regarded as being an individual with a disability on the basis of current illegal drug use.

Moreover, even if an individual has a disability, a covered entity can take action against the individual if that individual is currently engaging in illegal drug use. For example, if a person with a mobility or vision impairment is ADA paratransit eligible, but is caught possessing or using cocaine or marijuana on a paratransit vehicle, the transit provider can deny the individual further eligibility. If the individual has successfully undergone rehabilitation or is no longer using drugs, as explained in the preamble to the DOJ rules, the transit provider could not continue to deny eligibility on the basis that the individual was a former drug user or still was diagnosed as a person with a substance abuse problem.

We defined ''paratransit'' in order to note its specialized usage in the rule. Part 37 uses this term to refer to the complementary paratransit service comparable to public fixed route systems which must be provided. Typically, paratransit is provided in a demand responsive mode. Obviously, the rule refers to a wide variety of demand responsive services that are not ''paratransit,'' in this specialized sense.

The ADA's definition of ''over-the-road bus'' may also be somewhat narrower than the common understanding of the term. The ADA definition focuses on a bus with an elevated passenger deck over a baggage compartment (i.e., a ''Greyhound-type'' bus). Other types of buses commonly referred to as ''over-the-road buses,'' which are sometimes used for commuter bus or other service, do not come within this definition. Only buses that do come within the definition are subject to the over-the-road bus exception to accessibility requirements in Title III of the ADA.

For terminological clarity, we want to point out that two different words are used in ADA regulations to refer to devices on which individuals with hearing impairments communicate over telephone lines. DOJ uses the more traditional term ''telecommunications device for the deaf'' (TDD). The Access Board uses a newer term, ''text telephone.'' The DOT rule uses the terms interchangably.

The definition of ''transit facility'' applies only with reference to the TDD requirement of appendix A to this Part. The point of the definition is to exempt from TDD requirements open structures, like bus shelters, or facilities which are not used primarily as transportation stops or terminals. For example, a drug store in a small town may sell intercity bus tickets, and people waiting for the bus may even wait for the bus inside the store. But the drug store's raison d'etre is

not to be a bus station. Its transportation function is only incidental. Consequently, its obligations with respect to TDDs would be those required of a place of public accommodation by DOJ rules.

A ''used vehicle'' means a vehicle which has prior use; prior, that is, to its acquisition by its present owner or lessee. The definition is not relevant to existing vehicles in one's own fleet, which were obtained before the ADA vehicle accessibility requirements took effect.

A ''vanpool'' is a voluntary commuter ridesharing arrangement using a van with a seating capacity of more than seven persons, including the driver. Carpools are not included in the definition. There are some systems using larger vehicles (e.g., buses) that operate, in effect, as vanpools. This definition encompasses such systems. Vanpools are used for daily work trips, between commuters' homes (or collection points near them) and work sites (or drop points near them). Drivers are themselves commuters who are either volunteers who receive no compensation for their efforts or persons who are reimbursed by other riders for the vehicle, operating, and driving costs.

The definition of ''wheelchair'' includes a wide variety of mobility devices. This inclusiveness is consistent with the legislative history of the ADA (See S. Rept. 101–116 at 48). While some mobility devices may not look like many persons' traditional idea of a wheel chair, three and four wheeled devices, of many varied designs, are used by individuals with disabilities and must be transported. The definition of ''common wheelchair,'' developed by the Access Board, is intended to help transit providers determine which wheelchairs they have to carry. The definition involves an ''envelope'' relating to the Access Board requirements for vehicle lifts.

A lift conforming to Access Board requirements is 30″×48″ and capable of lifting a wheelchair/occupant combination of up to 600 pounds. Consequently, a common wheelchair is one that fits these size and weight dimensions. Devices used by individuals with disabilities that do not fit this envelope (e.g., may ''gurneys'') do not have to be carried.

Section 37.5 Nondiscrimination

This section states the general nondiscrimination obligation for entities providing transportation service. It should be noted that virtually all public and private entities covered by this regulation are also covered by DOJ regulations, which have more detailed statements of general nondiscrimination obligations.

Under the ADA, an entity may not consign an individual with disabilities to a separate, ''segregated,'' service for such persons, if the individual can in fact use the service for the general public. This is true even if the individual takes longer, or has more difficulty, than other persons in using the service for the general public.

One instance in which this principal applies concerns the use of designated priority seats (e.g., the so-called ''elderly and handicapped'' seats near the entrances to buses). A person with a disability (e.g., a visual impairment) may choose to take advantage of this accommodation or not. If not, it is contrary to rule for the entity to insist that the individual must sit in the priority seats.

The prohibition on special charges applies to charges for service to individuals with disabilities that are higher than charges for the same or comparable services to other persons. For example, if a shuttle service charges $20.00 for a ride from a given location to the airport for most people, it could not charge $40.00 because the passenger had a disability or needed to use the shuttle service's lift-equipped van. Higher mileage charges for using an accessible vehicle would likewise be inconsistent with the rule. So would charging extra to carry a service animal accompanying an individual with a disability.

If a taxi company charges $1.00 to stow luggage in the trunk, it cannot charge $2.00 to stow a folding wheelchair there. This provision does not mean, however, that a transportation provider cannot charge nondiscriminatory fees to passengers with disabilities. The taxi company in the above example can charge a passenger $1.00 to stow a wheelchair in the trunk; it is not required to waive the charge. This section does not prohibit the fares for paratransit service which transit providers are allowed to charge under §37.131(d).

A requirement for an attendant is inconsistent with the general nondiscrimination principle that prohibits policies that unnecessarily impose requirements on individuals with disabilities that are not imposed on others. Consequently, such requirements are prohibited. An entity is not required to provide attendant services (e.g., assistance in toileting, feeding, dressing), etc.

This provision must also be considered in light of the fact that an entity may refuse service to someone who engages in violent, seriously disruptive, or illegal conduct. If an entity may legitimately refuse service to someone, it may condition service to him on actions that would mitigate the problem. The entity could require an attendant as a condition of providing service it otherwise had the right to refuse.

The rule also points out that involuntary conduct related to a disability that may offend or annoy other persons, but which does not pose a direct treat, is not a basis for refusal of transportation. For example, some persons with Tourette's syndrome may make involuntary profane exclamations. These may be very annoying or offensive to others,

but would not be a ground for denial of service. Nor would it be consistent with the nondiscrimination requirements of this part to deny service based on fear or misinformation about the disability. For example, a transit provider could not deny service to a person with HIV disease because its personnel or other passengers are afraid of being near people with that condition.

This section also prohibits denials of service or the placing on services of conditions inconsistent with this part on individuals with disabilities because of insurance company policies or requirements. If an insurance company told a transit provider that it would withdraw coverage, or raise rates, unless a transit provider refused to carry persons with disabilities, or unless the provider refused to carry three-wheeled scooters, this would not excuse the provider from providing the service as mandate by this part. This is not a regulatory requirement on insurance companies, but simply says that covered entities must comply with this part, even in the face of difficulties with their insurance companies.

Section 37.7 Standards for Accessible Vehicles

This section makes clear that, in order to meet accessibility requirements of this rule, vehicles must comply with Access Board standards, incorporated in DOT rules as 49 CFR part 38. Paragraph (b) of §37.7 spells out a procedure by which an entity (public or private) can deviate from provisions of part 38 with respect to vehicles. The entity can make a case to the Administrator that it is unable to comply with a particular portion of part 38, as written, for specified reasons, and that it is providing comparable compliance by some alternative method. The entity would have to describe how its alternative mode of compliance would meet or exceed the level of access to or usability of the vehicle that compliance with part 38 would otherwise provide.

It should be noted that equivalent facilitation does not provide a means to get a waiver of accessibility requirements. Rather, it is a way in which comparable (not a lesser degree of) accessibility can be provided by other means. The entity must consult with the public through some means of public participation in devising its alternative form of compliance, and the public input must be reflected in the submission to the Administrator (or the Federal Railroad Administrator in appropriate cases, such as a request concerning Amtrak). The Administrator will make a case-by-case decision about whether compliance with part 38 was achievable and, if not, whether the proffered alternative complies with the equivalent facilitation standard. DOT intends to consult with the Access Board in making these determinations.

This equivalent facilitation provision can apply to buses or other motor vehicles as well as to rail cars and vehicles. An example of what could be an equivalent facilitation would concern rail cars which would leave too wide a horizontal gap between the door and the platform. If the operator used a combination of bridgeplates and personnel to bridge the gap, it might be regarded as an equivalent facilitation in appropriate circumstances.

Section 37.7(c) clarifies which specifications must be complied with for over-the-road buses purchased by public entities (under subpart D of part 37) or private entities standing in the shoes of the public entity (as described in §37.23 of part 37). This section is necessary to make clear that over-the-road coaches must be accessible, when they are purchased by or in furtherance of a contract with a public entity. While the October 4, 1990 rule specified that over-the-road coaches must be accessible under these circumstances, we had not previously specified what constitutes accessibility.

Accordingly, this paragraph specifies that an over-the-road bus must have a lift which meets the performance requirements of a regular bus lift (see §38.23) and must meet the interim accessibility features specified for all over-the-road buses in part 3, subpart G.

Section 37.9 Standards for Transportation Facilities

This section makes clear that, in order to meet accessibility requirements of this rule, vehicles must comply with appendix A to part 37, which incorporates the Access Board facility guidelines.

Paragraph (b) of §37.9 provides that, under certain circumstances, existing accessibility modifications to key station facilities do not need to be modified further in order to conform to appendix A. This is true even if the standards under which the facility was modified differ from the Access Board guidelines or provide a lesser standard of accessibility.

To qualify for this ''grandfathering,'' alterations must have been before January 26, 1992. As in other facility sections of the rule, an alteration is deemed to begin with the issuance of a notice to proceed or work order. The existing modifications must conform to ANSI A–117.1, Specifications for Making Buildings and Facilities Accessible to and Usable by the Physically Handicapped 1980, or the Uniform Federal Accessibility Standard. (UFAS).

For example, if an entity used a Federal grant or loan or money to make changes to a building, it would already have had to comply with the Uniform Federal Accessibility Standards. Likewise, if a private entity, acting without any Federal money in the project, may have complied with the ANSI A117.1 standard. So long as the work was

done in conformity with the standard that was in effect when the work was done, the alteration will be considered accessible.

However, because one modification was made to a facility under one of these standards, the entity still has a responsibility to make other modifications needed to comply with applicable accessibility requirements. For example, if an entity has made some modifications to a key station according to one of these older standards, but the modifications do not make the key station entirely accessible as this rule requires, then additional modifications would have to be made according to the standards of appendix A. Suppose this entity has put an elevator into the station to make it accessible to individuals who use wheelchairs. If the elevator does not fully meet appendix A standards, but met the applicable ANSI standard when it was installed, it would not need further modifications now. But if it had not already done so, the entity would have to install a tactile strip along the platform edge in order to make the key station fully accessible as provided in this rule. The tactile strip would have to meet appendix A requirements.

The rule specifically provides that ''grandfathering'' applies only to alterations of individual elements and spaces and only to the extent that provisions covering those elements or spaces are found in UFAS or AHSI A117.1. For example, alterations to the telephones in a key station may have been carried out in order to lower them to meet the requirements of UFAS, but telecommunications devices for the deaf (TDDs) were not installed. (Neither UFAS nor the ANSI standard include requirements concerning TDDs). However, because appendix A does contain TDD requirements, the key station must now be altered in accordance with the standards for TDDs. Similarly, earlier alteration of an entire station in accordance with UFAS or the ANSI standard would not relieve an entity from compliance with any applicable provision concerning the gap between the platform between the platform and the vehicle in a key station, because neither of these two standards addresses the interface between vehicle and platform.

New paragraph (c) of this section clarifies a provision of the Access Board's standards concerning the construction of bus stop pads at bus stops. The final Access Board standard (found at section 10.2.1(1) of appendix A to part 37) has been rewritten slightly to clear up confusion about the perceived necessary construction of a bus stop pad. Section 10.2.1(1) does not require that anyone build a bus stop pad; it does specify what a bus stop pad must look like, if it is constructed. The further clarifying language in §37.9(c) explains that public entities must exert control over the construction of bus stop pads if they have the ability to do so. The Access Board, as well as DOT, recognize that most physical improvements related to bus stops are out of the control of the transit provider. Paragraph (c) of §37.9 merely notes that where a transit provider does have control over the construction, it must exercise that control to ensure that the pad meets these specifications.

One further clarification concerning the implication of this provision deals with a bus loading island at which buses pull up on both sides of the island. It would be possible to read the bus pad specification to require the island to be a minimum of 84 inches wide (two widths of a bus stop pad), so that a lift could be deployed from buses on both sides of the island at the same time. A double-wide bus pad, however, is likely to exceed available space in most instances.

Where there is space, of course, building a double-wide pad is one acceptable option under this rule. However, the combination of a pad of normal width and standard operational practices may also suffice. (Such practices could be offered as an equivalent facilitation.) For example, buses on either side of the island could stop at staggered locations (i.e., the bus on the left side could stop several feet ahead of the bus on the right side), so that even when buses were on both sides of the island at once, their lifts could be deployed without conflict. Where it is possible, building the pad a little longer than normal size could facilitate such an approach. In a situation where staggered stop areas are not feasible, an operational practice of having one bus wait until the other's lift cycle had been completed could do the job. Finally, the specification does not require that a pad be built at all. If there is nothing that can be done to permit lift deployment on both sides of an island, the buses can stop on the street, or some other location, so long as the lift is deployable.

Like §37.7, this section contains a provision allowing an entity to request approval for providing accessibility through an equivalent facilitation.

Section 37.11 Administrative Enforcement

This section spells out administrative means of enforcing the requirements of the ADA. Recipients of Federal financial assistance from DOT (whether public or private entities) are subject to DOT's section 504 enforcement procedures. The existing procedures, including administrative complaints to the DOT Office of Civil Rights, investigation, attempts at conciliation, and final resort to proceedings to cut off funds to a noncomplying recipient, will continue to be used.

In considering enforcement matters, the Department is guided by a policy that emphasizes compliance. The aim of enforcement action, as we see it, is to make sure that entities meet their obligations, not to impose

sanctions for their own sake. The Department's enforcement priority is on failures to comply with basic requirements and ''pattern or practice'' kinds of problems, rather than on isolated operational errors.

Under the DOJ rules implementing title II of the ADA (28 CFR part 35), DOT is a ''designated agency'' for enforcement of complaints relating to transportation programs of public entities, even if they do not receive Federal financial assistance. When it receives such a complaint, the Department will investigate the complaint, attempt conciliation and, if conciliation is not possible, take action under section 504 and/or refer the matter to the DOJ for possible further action.

Title III of the ADA does not give DOT any administrative enforcement authority with respect to private entities whose transportation services are subject to part 37. In its title III rule (28 CFR part 36), DOJ assumes enforcement responsibility for all title III matters. If the Department of Transportation receives complaints of violations of part 37 by private entities, it will refer the matters to the DOJ.

It should be pointed out that the ADA includes other enforcement options. Individuals have a private right of action against entities who violate the ADA and its implementing regulations. The DOJ can take violators to court. These approaches are not mutually exclusive with the administrative enforcement mechanisms described in this section. An aggrieved individual can complain to DOT about an alleged transportation violation and go to court at the same time. Use of administrative enforcement procedures is not, under titles II and III, an administrative remedy that individuals must exhaust before taking legal action.

We also would point out that the ADA does not assert any blanket preemptive authority over state or local nondiscrimination laws and enforcement mechanisms. While requirements of the ADA and this regulation would preempt conflicting state or local provisions (e.g., a building code or zoning ordinance that prevents compliance with appendix A or other facility accessibility requirements, a provision of local law that said bus drivers could not leave their seats to help secure wheelchair users), the ADA and this rule do not prohibit states and localities from legislating in areas relating to disability. For example, if a state law requires a higher degree of service than the ADA, that requirement could still be enforced. Also, states and localities may continue to enforce their own parallel requirements. For example, it would be a violation of this rule for a taxi driver to refuse to pick up a person based on that person's disability. Such a refusal may also be a violation of a county's taxi rules, subjecting the violator to a fine or suspension of operating privileges. Both ADA and local remedies could proceed in such a case.

Labor-management agreements cannot stand in conflict with the requirements of the ADA and this rule. For example, if a labor-management agreement provides that vehicle drivers are not required to provide assistance to persons with disabilities in a situation in which this rule requires such assistance, then the assistance must be provided notwithstanding the agreement. Labor and management do not have the authority to agree to violate requirements of Federal law.

Section 37.13 Effective Date for Certain Vehicle Lift Specifications.

This section contains an explicit statement of the effective date for vehicle lift platform specifications. The Department has decided to apply the new part 38 lift platform specifications to solicitations after January 25, 1992. As in the October 4, 1990, rule implementing the acquisition requirements; the date of a solicitation is deemed to be the closing date for the submission of bids or offers in a procurement.

SUBPART B—APPLICABILITY

Section 37.21 Applicability—General

This section emphasizes the broad applicability of part 37. Unlike section 504, the ADA and its implementing rules apply to entities whether or not they receive Federal financial assistance. They apply to private and public entities alike. For entities which do receive Federal funds, compliance with the ADA and part 37 is a condition of compliance with section 504 and 49 CFR part 27, DOT's section 504 rule.

Virtually all entities covered by this rule also are covered by DOJ rules, either under 28 CFR part 36 as state and local program providers or under 28 CFR part 35 as operators of places of public accommodation. Both sets of rules apply; one does not override the other. The DOT rules apply only to the entity's transportation facilities, vehicles, or services; the DOJ rules may cover the entity's activities more broadly. For example, if a public entity operates a transit system and a zoo, DOT's coverage would stop at the transit system's edge, while DOJ's rule would cover the zoo as well.

DOT and DOJ have coordinated their rules, and the rules have been drafted to be consistent with one another. Should, in the context of some future situation, there be an apparent inconsistency between the two rules, the DOT rule would control within the sphere of transportation services, facilities and vehicles.

Section 37.23 Service Under Contract

This section requires private entities to ''stand in the shoes'' of public entities with whom they contract to provide transportation services. It ensures that, while a public entity may contract out its service, it may not contract away its ADA responsibilities. The requirement applies primarily to vehicle acquisition requirements and to service provision requirements.

If a public entity wishes to acquire vehicles for use on a commuter route, for example, it must acquire accessible vehicles. It may acquire accessible over-the-road buses, it may acquire accessible full-size transit buses, it may acquire accessible smaller buses, or it may acquire accessible vans. It does not matter what kind of vehicles it acquires, so long as they are accessible. On the other hand, if the public entity wants to use inaccessible buses in its existing fleet for the commuter service, it may do so. All replacement vehicles acquired in the future must, of course, be accessible.

Under this provision, a private entity which contracts to provide this commuter service stands in the shoes of the public entity and is subject to precisely the same requirements (it is not required to do more than the public entity). If the private entity acquires vehicles used to provide the service, the vehicles must be accessible. If it cannot, or chooses not to, acquire an accessible vehicle of one type, it can acquire an accessible vehicle of another type. Like the public entity, it can provide the service with inaccessible vehicles in its existing fleet.

The import of the provision is that it requires a private entity contracting to provide transportation service to a public entity to follow the rules applicable to the public entity. For the time being, a private entity operating in its own right can purchase a new over-the-road bus inaccessible to individuals who use wheelchairs. When that private entity operates service under contract to the public entity, however, it is just as obligated as the public entity itself to purchase an accessible bus for use in that service, whether or not it is an over-the-road bus.

The ''stand in the shoes'' requirement applies not only to vehicles acquired by private entities explicitly under terms of an executed contract to provide service to a public entity, but also to vehicles acquired ''in contemplation of use'' for service under such a contract. This language is included to ensure good faith compliance with accessibility requirements for vehicles acquired before the execution of a contract. Whether a particular acquisition is in contemplation of use on a contract will be determined on a case-by-case basis. However, acquiring a vehicle a short time before a contract is executed and then using it for the contracted service is an indication that the vehicle was acquired in contemplation of use on the contract, as is acquiring a vehicle obstensibly for other service provided by the entity and then regularly rotating it into service under the contract.

The ''stand in the shoes'' requirement is applicable only to the vehicles and service (public entity service requirements, like §37.163, apply to a private entity in these situations) provided under contract to a public entity. Public entity requirements clearly do not apply to all phases of a private entity's operations, just because it has a contract with a public entity. For example, a private bus company, if purchasing buses for service under contract to a public entity, must purchase accessible buses. The same company, to the extent permitted by the private entity provisions of this part, may purchase inaccessible vehicles for its tour bus operations.

The Department also notes that the ''stands in the shoes'' requirement may differ depending on the kind of service involved. The public entity's ''shoes'' are shaped differently, for example, depending on whether the public entity is providing fixed route or demand responsive service to the general public. In the case of demand responsive service, a public entity is not required to buy an accessible vehicle if its demand responsive system, when viewed in its entirety, provides service to individuals with disabilities equivalent to its service to other persons. A private contractor providing a portion of this paratransit service would not necessarily have to acquire an accessible vehicle if this equivalency test is being met by the system as a whole. Similarly, a public entity can, after going through a ''good faith efforts'' search, acquire inaccessible buses. A private entity under contract to the public can do the same. ''Stand in the shoes'' may also mean that, under some circumstances, a private contractor need not acquire accessible vehicles. If a private company contracts with a public school district to provide school bus service, it is covered, for that purpose, by the exemption for public school transportation.

In addition, the requirement that a private entity play by the rules applicable to a public entity can apply in situations involving an ''arrangement or other relationship'' with a public entity other than the traditional contract for service. For example, a private utility company that operates what is, in essence, a regular fixed route public transportation system for a city, and which receives section 3 or 9 funds from FTA via an agreement with a state or local government agency, would fall under the provisions of this section. The provider would have to comply with the vehicle acquisition, paratransit, and service requirements that would apply to the public entity through which it receives the FTA funds, if that public entity operated the system itself. The Department

would not, however, construe this section to apply to situations in which the degree of FTA funding and state and local agency involvement is considerably less, or in which the system of transportation involved is not a *de facto* surrogate for a traditional public entity fixed route transit system serving a city (e.g., a private non-profit social service agency which receives FTA section 16(b)(2) funds to purchase a vehicle).

This section also requires that a public entity not diminish the percentage of accessible vehicles in its fleet through contracting. For example, suppose a public entity has 100 buses in its fleet, of which 20 are accessible, meaning that 20 percent of its fleet is accessible. The entity decides to add a fixed route, for which a contractor is engaged. The contractor is supplying ten of its existing inaccessible buses for the fixed route. To maintain the 20 percent accessibility ratio, there would have to be 22 accessible buses out of the 110 buses now in operation in carrying out the public entity's service. The public entity could maintain its 20 percent level of accessibility through any one or more of a number of means, such as having the contractor to provide two accessible buses, retrofitting two if its own existing buses, or accelerating replacement of two of its own inaccessible buses with accessible buses.

This rule applies the ''stand in the shoes'' principle to transactions wholly among private entities as well. For example, suppose a taxi company (a private entity primarily engaged in the business of transporting people) contracts with a hotel to provide airport shuttle van service. With respect to that service, the taxi company would be subject to the requirements for private entities not primarily in the business of transporting people, since it would be ''standing in the shoes'' of the hotel for that purpose.

Section 37.25 University Transportation Systems

Private university-operated transportation systems are subject to the requirements of this rule for private entities not primarily engaged in the business of transporting people. With one important exception, public university-operated transportation systems are subject to the requirements of the rule for public entities. The nature of the systems involved—demand-responsive or fixed route—determines the precise requirements involved.

For public university fixed route systems, public entity requirements apply. In the case of fixed route systems, the requirements for commuter bus service would govern. This has the effect of requiring the acquisition of accessible vehicles and compliance with most other provisions of the rule, but does not require the provision of complementary paratransit or submitting a paratransit plan. As a result, private and public universities will have very similar obligations under the rule.

Section 37.27 Transportation for Elementary and Secondary Education Systems

This section restates the statutory exemption from public entity requirements given to public school transportation. This extension also applies to transportation of preschool children to Head Start or special education programs which receive Federal assistance. It also applies to arrangements permitting pre-school children of school bus drivers to ride a school bus or allowing teenage mothers to be transported to day care facilities at a school or along a school bus route so that their mothers may continue to attend school (See H. Rept. 101–485, pt. 1 at 27). The situation for private schools is more complex. According to the provision, a private elementary or secondary school's transportation system is exempt from coverage under this rule if all three of the following conditions are met: (1) The school receives Federal financial assistance; (2) the school is subject to section 504; and (3) the school's transportation system provides transportation services to individuals with disabilities, including wheelchair users, equivalent to those provided to individuals without disabilities. The test of equivalency is the same as that for other private entities, and is described under §37.105. If the school does not meet all these criteria, then it is subject to the requirements of Part 37 for private entities not primarily engaged in the business of transporting people.

The Department notes that, given the constitutional law on church-state separation, it is likely that church-affiliated private schools do not receive Federal financial assistance. To the extent that these schools' transportation systems are operated by religious entities or entities controlled by religious organizations, they are not subject to the ADA at all, so this section does not apply to them.

Section 37.29 Private Providers of Taxi Service

This section first recites that providers of taxi service are private entities primarily engaged in the business of transporting people which provide demand responsive service. For purposes of this section, other transportation services that involve calling for a car and a driver to take one places (e.g., limousine services, of the kind that provide luxury cars and chauffeurs for senior proms and analogous adult events) are regarded as taxi services.

Under the ADA, no private entity is required to purchase an accessible automobile. If a taxi company purchases a larger vehicle, like a van, it is subject to the same rules as any other private entity primarily engaged

in the business of transporting people which operates a demand responsive service. That is, unless it is already providing equivalent service, any van it acquires must be accessible. Equivalent service is measured according to the criteria of §37.105. Taxi companies are not required to acquire vehicles other than automobiles to add accessible vehicles to their fleets.

Taxi companies are subject to nondiscrimination obligations. These obligations mean, first, that a taxi service may not deny a ride to an individual with a disability who is capable of using the taxi vehicles. It would be discrimination to pass up a passenger because he or she was blind or used a wheelchair, if the wheelchair was one that could be stowed in the cab and the passenger could transfer to a vehicle seat. Nor could a taxi company insist that a wheelchair user wait for a lift-equipped van if the person could use an automobile.

It would be discrimination for a driver to refuse to assist with stowing a wheelchair in the trunk (since taxi drivers routinely assist passengers with stowing luggage). It would be discrimination to charge a higher fee or fare for carrying a person with a disability than for carrying a non-disabled passenger, or a higher fee for stowing a wheelchair than for stowing a suitcase. (Charging the same fee for stowing a wheelchair as for stowing a suitcase would be proper, however.) The fact that it may take somewhat more time and effort to serve a person with a disability than another passenger does not justify discriminatory conduct with respect to passengers with disabilities.

State or local governments may run user-side subsidy arrangements for the general public (e.g., taxi voucher systems for senior citizens or low-income persons). Under the DOJ title II rule, these programs would have to meet ''program accessibility'' requirements, which probably would require that accessible transportation be made available to senior citizens or low-income persons with disabilities. This would not directly require private taxi providers who accept the vouchers to purchase accessible vehicles beyond the requirements of this rule, however.

Section 37.31 Vanpools

This provision applies to public vanpool systems the requirements for public entities operating demand responsive systems for the general public. A public vanpool system is one operated by a public entity, or in which a public entity owns or purchases or leases the vehicles. Lesser degrees of public involvement with an otherwise private ride-sharing arrangement (e.g., provision of parking spaces, HOV lanes, coordination or clearinghouse services) do not convert a private into a public system.

The requirement for a public vanpool system is that it purchase or lease an accessible vehicle unless it can demonstrate that it provides equivalent service to individuals with disabilities, including individuals who use wheelchairs, as it provides to individuals without disabilities. For a public vanpool system, the equivalency requirement would be met if an accessible vehicle is made available to and used by a vanpool when an individual with a disability needs such a vehicle to participate. Public vanpool systems may meet this requirement through obtaining a percentage of accessible vehicles that is reasonable in light of demand for them by participants, but this is not required, so long as the entity can respond promptly to requests for participation in a vanpool with the provision of an accessible van when needed.

There is no requirement for private vanpools, defined as a voluntary arrangement in which the driver is compensated only for expenses.

Section 37.33 Airport Transportation Systems

Fixed route transportation systems operated by public airports are regarded by this section as fixed route commuter bus systems. As such, shuttles among terminals and parking lots, connector systems among the airport and a limited number of other local destinations must acquire accessible buses, but are not subject to complementary paratransit requirements. (If a public airport operates a demand responsive system for the general public, it would be subject to the rules for demand responsive systems for the general public.)

It should be noted that this section applies only to transportation services that are operated by public airports themselves (or by private contractors who stand in their shoes). When a regular urban mass transit system serves the airport, the airport is simply one portion of its service area, treated for purposes of this rule like the rest of its service area.

Virtually all airports are served by taxi companies, who are subject to §37.29 at airports as elsewhere. In addition, many airports are served by jitney or shuttle systems. Typically, these systems operate in a route-deviation or similar variable mode in which there are passenger-initiated decisions concerning destinations. We view such systems as demand responsive transportation operated by private entities primarily engaged in the business of transporting people.

Since many of these operators are small businesses, it may be difficult for them to meet equivalency requirements on their own without eventually having all or nearly all accessible vehicles, which could pose economic problems. One suggested solution to this problem is for the operators serving a given airport to form a pool or consortium arrangement, in which a number of shared accessible vehicles would meet the transportations of individuals with disabilities. As in

other forms of transportation, such an arrangement would have to provide service in a nondiscriminatory way (e.g., in an integrated setting, no higher fares for accessible service).

Section 37.35 Supplemental Service for Other Transportation Modes

This section applies to a number of situations in which an operator of another transportation mode uses bus or other service to connect its service with limited other points.

One instance is when an intercity railroad route is set up such that the train stops outside the major urban center which is the actual destination for many passengers. Examples mentioned to us include bus service run by Amtrak from a stop in Columbus, Wisconsin, to downtown Madison, or from San Jose to San Francisco. Such service is fixed route, from the train station to a few points in the metropolitan area, with a schedule keyed to the train schedule. It would be regarded as commuter bus service, meaning that accessible vehicles would have to be acquired but complementary paratransit was not required.

Another instance is one in which a commuter rail operator uses fixed route bus service as a dedicated connection to, or extension of, its rail service. The service may go to park and ride lots or other destinations beyond the vicinity of the rail line. Again, this service shares the characteristics of commuter bus service that might be used even if the rail line were not present, and does not attempt to be a comprehensive mass transit bus service for the area.

Of course, there may be instances in which a rail operator uses demand responsive instead of fixed route service for a purpose of this kind. In that case, the demand responsive system requirements of the rule would apply.

Private entities (i.e., those operating places of public accommodation) may operate similar systems, as when a cruise ship operator provides a shuttle or connector between an airport and the dock. This service is covered by the rules governing private entities not primarily engaged in the business of transporting people. Fixed route or demand responsive rules apply, depending on the characteristics of the system involved.

One situation not explicitly covered in this section concerns *ad hoc* transportation arranged, for instance, by a rail operator when the train does not wind up at its intended destination. For example, an Amtrak train bound for Philadelphia may be halted at Wilmington by a track blockage between the two cities. Usually, the carrier responds by providing bus service to the scheduled destination or to the next point where rail service can resume.

The service that the carrier provides in this situation is essentially a continuation by other means of its primary service. We view the obligation of the rail operator as being to ensure that all passengers, including individuals with disabilities, are provided service to the destination in a nondiscriminatory manner. This includes, for instance, providing service in the most integrated setting appropriate to the needs of the individual and service that gets a passenger with a disability to the destination as soon as other passengers.

Section 37.37 Other Applications

The ADA specifically defines ''public entity.'' Anything else is a ''private entity.'' The statute does not include in this definition a private entity that receives a subsidy or franchise from a state or local government or is regulated by a public entity. Only through the definition of ''operates'' (see discussion of §37.23) do private entities' relationships to public entities subject private entities to the requirements for public entities. Consequently, in deciding which provisions of the rule to apply to an entity in other than situations covered by §37.23, the nature of the entity—public or private—is determinative.

Transportation service provided by public accommodations is viewed as being provided by private entities not primarily engaged in the business of transporting people. Either the provisions of this part applicable to demand responsive or fixed route systems apply, depending on the nature of a specific system at a specific location. The distinction between fixed route and demand responsive systems is discussed in connection with the definitions section above. It is the responsibility of each private entity, in the first instance, to assess the nature of each transportation system on a case-by-case basis and determine the applicable rules.

On the other hand, conveyances used for recreational purposes, such as amusement park rides, ski lifts, or historic rail cars or trolleys operated in museum settings, are not viewed as transportation under this rule at all. Other conveyances may fit into this category as well.

The criterion for determining what requirements apply is whether the conveyances are primarily an aspect of the recreational experience itself or a means of getting from Point A to Point B. At a theme park, for instance, a large roller coaster (though a ''train'' of cars on a track) is a public accommodation not subject to this rule; the tram that transports the paying customers around the park, with a stop at the roller coaster, is a transportation system subject to the ''private, not primarily'' provisions of this part.

Employer-provided transportation for employees is not covered by this part, but by EEOC rules under title I of the ADA. (Public entities are also subject to DOJ's title II

rules with respect to employment.) This exclusion from part 37 applies to transportation services provided by an employer (whether access to motor pool vehicles, parking shuttles, employer-sponsored van pools) that is made available solely to its own employees. If an employer provides service to its own employees and other persons, such as workers of other employers or customers, it would be subject to the requirements of this part from private entities not primarily engaged in the business of transporting people or public entities, as applicable.

The rule looks to the private entity actually providing the transportation service in question in determining whether the ''private, primarily'' or ''private, not primarily'' rules apply. For example, Conglomerate, Inc., owns a variety of agribusiness, petrochemical, weapons system production, and fast food corporations. One of its many subsidiaries, Green Tours, Inc., provides charter bus service for people who want to view national parks, old-growth forests, and other environmentally significant places. It is probably impossible to say in what business Conglomerate, Inc. is primarily engaged, but it clearly is not transporting people. Green Tours, Inc., on the other hand, is clearly primarily engaged in the business of transporting people, and the rule treats it as such.

On the other hand, when operating a transportation service off to the side of to the main business of a public accommodation (e.g., a hotel shuttle), the entity as a whole would be considered. Even if some dedicated employees are used to provide the service, shuttles and other systems provided as a means of getting to, from, or around a public accommodation remain solidly in the ''private, not primarily'' category.

SUBPART C—TRANSPORTATION FACILITIES

Section 37.41 Construction of Transportation Facilities by Public Entities

Section 37.41 contains the general requirement that all new facilities constructed after January 25, 1992, be accessible to and usable by individuals with disabilities. This provision tracks the statute closely, and is analogous to a provision in the DOJ regulations for private entities. Section 226 of the ADA provides little discretion in this requirement.

The requirement is keyed to construction which ''begins'' after January 25, 1992. The regulation defines ''begin'' to mean when a notice to proceed order has been issued. This term has a standard meaning in the construction industry, as an instruction to the contractor to proceed with the work.

Questions have been raised concerning which standards apply before January 26, 1992. There are Federal requirements that apply to all recipients of federal money, depending on the circumstances.

First, if an entity is a Federal recipient and uses Federal dollars to construct the facility, regulations implementing section 504 of the Rehabilitation Act of 1973 (29 U.S.C. 794), require the recipient to comply with the Uniform Federal Accessibility Standards.

Second, since the Civil Rights Restoration Act of 1987 (Pub. L. 100–259), an operation of a recipient of federal funds would also have to comply with section 504, even though the activity was not paid for with Federal funds. Thus, the Uniform Federal Accessibility Standards would apply to this construction as well.

As mentioned above, the Department intends, in the period before January 26, 1991, to view compliance with section 504 in light of compliance with ADA requirements (this point applies to alterations as well as new construction). Consequently, in reviewing requests for grants, contract approvals, exemptions, etc., (whether with respect to ongoing projects or new, experimental, or one-time efforts), the Department will, as a policy matter, seek to ensure compliance with ADA standards.

Section 37.43 Alteration of Transportation Facilities by Public Entities

This section sets out the accessibility requirements that apply when a public entity undertakes an alteration of an existing facility. In general, the section requires that any alteration, to the maximum extent feasible, results in the altered area being accessible to and usable by individuals with disabilities, including persons who use wheelchairs. The provisions follow closely those adopted by the DOJ, in its regulations implementing title III of the ADA.

The section requires specific activities whenever an alteration of an existing facility is undertaken.

First, if the alteration is made to a primary function area, (or access to an area containing a primary function), the entity shall make the alteration in such a way as to ensure that the path of travel to the altered area and the restrooms, telephones and drinking fountains servicing the altered area are readily accessible to and usable by individuals with disabilities, including individuals who use wheelchairs.

Second, alterations to drinking fountains, telephones, and restrooms do not have to be completed if the cost and scope of making them accessible is disproportionate.

Third, the requirement goes into effect for alterations begun after January 25, 1992.

Fourth, the term ''maximum extent feasible'' means that all changes that are possible must be made. The requirement to make changes to the maximum extent feasible derives from clear legislative history. The Senate Report states—

The phrase ''to the maximum extent feasible'' has been included to allow for the occasional case in which the nature of an existing facility is such as to make it virtually impossible to renovate the building in a manner that results in its being entirely accessible to and usable by individuals with disabilities. In all such cases, however, the alteration should provide the maximum amount of physical accessibility feasible.

Thus, for example the term ''to the maximum extent feasible'' should be construed as not requiring entities to make building alterations that have little likelihood of being accomplished without removing or altering a load-bearing structural member unless the load-bearing structural member is otherwise being removed or altered as part of the alteration. (S. Rept. 101–116, at 68).

Fifth, primary function means a major activity for which the facility is intended. Primary function areas include waiting areas, ticket purchase and collection areas, train or bus platforms, baggage checking and return areas, and employment areas (with some exceptions stated in the rule, for areas used by service personnel that are very difficult to access).

Sixth, ''path of travel'' means a continuous, unobstructed way of pedestrian passage by means of which the altered area may be approached, entered, and exited, and which connects the altered area with an exterior approach and includes restrooms, telephones, and drinking fountains serving the altered area. If changes to the path of travel are disproportionate, then only those changes which are not disproportionate are to be completed.

Seven, the final rule specifies that costs exceeding 20 percent would be disproportionate. This is consistent with the DOJ. In determining costs, the Department intends costs to be based on changes to the passenger service area that is scheduled for alteration.

Finally, the Department has defined the term ''begin'', in the context of begin an alteration that is subject to the alteration provision to mean when a notice to proceed or work order is issued. Two terms are used (instead of only notice to proceed in the context of new construction) because many alterations may be carried out by the entity itself, in which case the only triggering event would be a work order or similar authorization to begin.

In looking at facility concepts like ''disproportionality'' and ''to the maximum extent feasible,'' the Department will consider any expenses related to accessibility for passengers. It is not relevant to consider non-passenger related improvements (e.g., installing a new track bed) or to permit ''gold-plating'' (attributing to accessibility costs the expense of non-related improvements, such as charging to accessibility costs the price of a whole new door, when only adding a new handle to the old door was needed for accessibility).

Section 37.47 Key Stations in Light and Rapid Rail Systems

Section 37.49 Designation of Responsible Person(s) for Intercity and Commuter Rail Stations

This section sets forth a mechanism for determining who bears the legal and financial responsibility for accessibility modifications to a commuter and/or intercity rail station. The final provision of the section is the most important. It authorizes all concerned parties to come to their own agreement concerning the allocation of responsibility. Such an agreement can allocate responsibility in any way acceptable to the parties. The Department strongly encourages parties to come to such an agreement.

In the absence of such an agreement, a statutory/regulatory scheme allocates responsibility. In the first, and simplest, situation posed by the statute, a single public entity owns more than 50 percent of the station. In this case, the public entity is the responsible person and nobody else is required to bear any of the responsibility.

In the second situation, a private entity owns more than 50 percent of the station. The private entity need not bear any of the responsibility for making the station accessible. A public entity owner of the station, who does not operate passenger railroad service through the station, is not required to bear any of the responsibility for making the station accessible. The total responsibility is divided between passenger railroads operating service through the station, on the basis of respective passenger boardings. If there is only one railroad operating service through the station, it bears the total responsibility.

The Department believes that reference to passenger boardings is the most equitable way of dividing responsibility among railroads, since the number of people drawn to the station by each is likely to reflect ''cost causation'' quite closely. The Department notes, however, that, as passenger boarding percentages change over time, the portion of responsibility assigned to each party also may change. Station modifications may involve long-term capital investment and planning, while passenger boarding percentages are more volatile. Some railroads may stop serving a station, while others may begin service, during the period of time before modifications to the station are complete. To help accommodate such situations, the rule refers to passenger boardings ''over the entire period during which the station is made accessible.''

This language is intended to emphasize that as circumstances change, the parties involved have the responsibility to adjust their

arrangements for cost sharing. For example, suppose Railroad A has 30 percent of the passenger boardings in year 1, but by year 10 has 60 percent of the boardings. It would not be fair for Railroad A to pay only 30 percent of the costs of station modifications occurring in later years. Ultimately, the total cost burden for modifying the station over (for example) 20 years would be allocated on the share of the total number or boardings attributable to each railroad over the whole 20 year period, in order to avoid such unfairness.

The third, and most complicated, situation is one in which no party owns 50 percent of the station. For example, consider the following hypothetical situation:

Party	Ownership percentage	Boardings percentage
Private freight RR	40	0
City	30	0
Amtrak	0	25
Commuter A	30	50
Commuter B	0	25

The private freight railroad drops out of the calculation of who is responsible. All of the responsibility would be allocated among four public entities: the city (a public entity who does not operate railroad service), Amtrak, and the two commuter railroads. Half the responsibility would go to public entity owners of the station (whether or not they are railroads who run passenger service through the station). The other half of the responsibility would go to railroads who run passenger service through the station (whether or not they are station owners).

On the ownership side of the equation, the city and Commuter A each own half of that portion of the station that is not owned by the private freight railroad. Therefore, the two parties divide up the ownership half of the responsibility equally. Based on their ownership interest, each of these two parties bears 25 percent of the responsibility for the entire station. Note that, should ownership percentages or owners change over the period during which the station is to be made accessible, these percentages may change. It is ownership percentage over this entire period that ultimately determines the percentage of responsibility.

On the passenger rail operations side of the equation, 50 percent of passenger boardings are attributable to Commuter A and 25 percent each to Commuter B and Amtrak. Therefore, half of this portion of the responsibility belongs to Commuter A, while a quarter share each goes to the other railroads. This means that, based on passenger boardings, 25 percent of the responsibility goes to Commuter A, 12.5 percent to Commuter B, and 12.5 percent to Amtrak. Again, it is the proportion of passenger boardings over the entire length of the period during which the station is made accessible that ultimately determines the percentage of responsibility.

In this hypothetical, Commuter A is responsible for a total of 50 percent of the responsibility for the station. Commuter A is responsible for 25 percent of the responsibility because of its role as a station owner and another 25 percent because of its operation of passenger rail service through the station.

The Department recognizes that there will be situations in which application of this scheme will be difficult (e.g., involving problems with multiple owners of a station whose ownership percentages may be difficult to ascertain). The Department again emphasizes that agreement among the parties is the best way of resolving these problems, but we are willing to work with the parties to ensure a solution consistent with this rule.

Section 37.51 Key Stations in Commuter Rail Systems

These sections require that key stations in light, rapid, and commuter rail systems be made accessible as soon as practicable, but no later than July 26, 1993. Being made accessible, for this purpose, means complying with the applicable provisions of appendix A to this part. ''As soon as practicable'' means that, if modification can be made before July 26, 1993, they must be. A rail operator that failed to make a station accessible by July 1993 would be in noncompliance with the ADA and this rule, except in a case where an extension of time had been granted.

What is a key station? A key station is one designated as such by the commuter authority or light/rapid rail operator, through the planning process and public participation process set forth in this section. The five criteria listed in the regulation are intended to guide the selection process but, while the entity must take these criteria into account (and this consideration must be reflected in the planning process and documents), they are not mandatory selection standards. That is, it is not required that every station that meets one of the criteria be designated as a key station. Since the criteria are not mandatory selection standards, the understanding of their terms is also a matter appropriately left to the planning process. A tight, legalistic definition is not necessary in the context of factors intended for consideration. For instance, what constitutes a major activity center or how close a station needs to be to another station to not be designated as key depend largely on local factors that it would not be reasonable to specify in this rule.

Given the wide discretion permitted to rail operators in identifying key stations, there would be no objection to identifying as a key station a new (presumably accessible) station now under construction. Doing so would

involve consideration of the key station criteria and would be subject to the planning/public participation process.

If an extension to a rail system (e.g., a commuter system) is made, such that the system comes to include existing inaccessible stations that have not previously been part of the system, the Department construes the ADA to require application of key station accessibility in such a situation. The same would be true for a new start commuter rail system that began operations using existing stations. Key station planning, designation of key stations, and with being consistent with the ADA would be required. The Department would work with the commuter authority involved on a case-by-case basis to determine applicable time limits for accessibility, consistent with the time frames of the ADA.

The entity must develop a compliance plan, subject to the public participation and planning process set forth in paragraph (d) of each of these sections. Note that this plan must be completed by July 26, 1992, not January 26, 1992, as in the case of paratransit plans. The key station plans must be submitted to FTA at that time. (The statute does not require FTA approval of the plans, however.).

A rail operator may request an extension of the July 1993 completion deadline for accessibility modifications to one or more key stations. The extension for light and rapid rail stations can be up to July 2020, though two thirds of the key stations (per the legislative history of the statute, selected in a way to maximize accessibility to the whole system) must be accessible by July 2010.

Commuter rail stations can be extended up to July 2010.

Requests for extension of time must be submitted by July 26, 1992. FTA will review the requests on a station-by-station basis according to the statutory criterion, which is whether making the station accessible requires extraordinarily expensive alterations. An extraordinarily expensive alteration is raising the entire platform, installing an elevator, or making another alteration of similar cost and magnitude. If another means of making a station accessible (e.g., installation of a mini-high platform in a station where it is not necessary to install an elevator or to provide access to the platform for wheelchair users), then an extension can be granted only if the rail operator shows that the cost and magnitude of the alteration is similar to that of an elevator installation or platform raising.

The rule does not include a specific deadline for FTA consideration of an extension request. However, since we are aware that, in the absence of an extension request, accessibility must be completed by July 1993, we will endeavor to complete review of plans as soon as possible, to give as much lead time as possible to local planning and implementation efforts.

Once an extension is granted, the extension applies to all accessibility modifications in the station. However, the rail operator should not delay non-extraordinarily expensive modifications to the station. The key station plan and any extension request should include a schedule for phasing in non-extraordinarily expensive modifications to the station. For example, even if a key station is not going to be accessible to wheelchair users for 15 years, pending the installation of an elevator, the rail operator can improve its accessibility to persons with visual impairments by installing tactile strips.

An extension cannot be granted except for a particular station which needs an extraordinarily expensive modification. An extension cannot be granted non-extraordinarily expensive changes to Station B because the extraordinarily expensive changes to Station A will absorb many resources. Non-extraordinarily expensive changes, however costly considered collectively for a system, are not, under the statute, grounds for granting an extension to one or more stations or the whole system. Only particular stations where an extraordinarily expensive modification must be made qualify for extensions.

The FTA Administrator can approve, modify, or disapprove any request for an extension. For example, it is not a forgone conclusion that a situation for which an extension is granted will have the maximum possible extension granted. If it appears that the rail operator can make some stations accessible sooner, FTA can grant an extension for a shorter period (e.g., 2005 for a particular station rather than 2010).

Section 37.53 Exception for New York and Philadelphia

Consistent with the legislative history of the ADA, this section formally recognizes the selection of key stations in two identified litigation settlement agreements in New York and Philadelphia as in compliance with the ADA. Consequently, the entities involved can limit their key station planning process to issues concerning the timing of key station accessibility. The section references also §37.9, which provides that key station accessibility alterations which have already been made, or which are begun before January 26, 1992, and which conform to specified prior standards, do not have to be re-modified. On the other hand, alterations begun after January 25, 1992 (including forthcoming key station modifications under the New York and Philadelphia agreements), must meet the requirements of appendix A to this part.

This is an exception only for the two specified agreements. There are no situations in which other cities can take advantage of this provision. Nor are the provisions of the two

agreements normative for other cities. Other cities must do their own planning, with involvement from local citizens, and cannot rely on agreements unique to New York and Philadelphia to determine the appropriate number of percentage of key stations or other matters.

Section 37.57 Required Cooperation

This section implements §242(e)(2)(C) of the ADA, which treats as discrimination a failure, by an owner or person in control of an intercity rail station, to provide reasonable cooperation to the responsible persons' efforts to comply with accessibility requirements. For example, the imposition by the owner of an unreasonable insurance bond from the responsible person as a condition of making accessibility modifications would violate this requirement. See H. Rept. 101–485 at 53.

The statute also provides that failure of the owner or person in control to cooperate does not create a defense to a discrimination suit against the responsible person, but the responsible person would have a third party action against the uncooperative owner or person in control. The rule does not restate this portion of the statute in the regulation, since it would be implemented by the courts if such an action is brought. Since cooperation is also a regulatory requirement, however, the Department could entertain a section 504 complaint against a recipient of Federal funds who failed to cooperate.

The House Energy and Commerce Committee provided as an example of an action under this provision a situation in which a failure to cooperate leads to a construction delay, which in turn leads to a lawsuit by an individual with disabilities against the responsible person for missing an accessibility deadline. The responsible person could not use the lack of cooperation as a defense in the lawsuit, but the uncooperative party could be made to indemnify the responsible person for damages awarded the plaintiff. Also, a responsible person could obtain an injunction to force the recalcitrant owner or controller of the station to permit accessibility work to proceed. (*Id.*)

This provision does not appear to be intended to permit a responsible person to seek contribution for a portion of the cost of accessibility work from a party involved with the station whom the statute and §37.49 do not identify as a responsible person. It simply provides a remedy for a situation in which someone impedes the responsible person's efforts to comply with accessibility obligations.

Section 37.59 Differences in Accessibility Completion Date Requirements

Portions of the same station may have different accessibility completion date requirements, both as the result of different statutory time frames for different kinds of stations and individual decisions made on requests for extension. The principle at work in responding to such situations is that if part of a station may be made accessible after another part, the ''late'' part of the work should not get in the way of people's use of modifications resulting from the ''early'' part.

For example, the commuter part of a station may have to be made accessible by July 1993 (e.g., there is no need to install an elevator, and platform accessibility can be achieved by use of a relatively inexpensive mini-high platform). The Amtrak portion of the same station, by statute, is required to be accessible as soon as practicable, but no later than July 2010. If there is a common entrance to the station, that commuter rail passengers and Amtrak passengers both use, or a common ticket counter, it would have to be accessible by July 1993. If there were a waiting room used by Amtrak passengers but not commuter passengers (who typically stand and wait on the platform at this station), it would not have to be accessible by July 1993, but if the path from the common entrance to the commuter platform went through the waiting room, the path would have to be an accessible path by July 1993.

Section 37.61 Public Transportation Programs and Activities in Existing Facilities

This section implements section 228(a) of the ADA and establishes the general requirement for entities to operate their transportation facilities in a manner that, when viewed in its entirety, is accessible to and usable by individuals with disabilities. The section clearly excludes from this requirement access by persons in wheelchairs, unless these changes would be necessitated by the alterations or key station provisions.

This provision is intended to cover activities and programs of an entity that do not rise to the level of alteration. Even if an entity is not making alterations to a facility, it has a responsibility to conduct its program in an accessible manner. Examples of possible activities include user friendly farecards, schedules, of edge detection on rail platforms, adequate lighting, telecommunication display devices (TDDs) or text telephones, and other accommodations for use by persons with speech and hearing impairments, signage for people with visual impairments, continuous pathways for persons with visual and ambulatory impairments, and public address systems and clocks.

The Department did not prescribe one list of things that would be appropriate for all stations. For example, we believe that tactile strips are a valuable addition to platforms which have drop-offs. We also believe that most larger systems, to the extent they

publish schedules, should make those schedules readily available in alternative formats. We encourage entities to find this another area which benefits from its commitment to far-reaching public participation efforts.

SUBPART D—ACQUISITION OF ACCESSIBLE VEHICLES BY PUBLIC ENTITIES

Section 37.71 Purchase or Lease of New Non-Rail Vehicles by Public Entities Operating Fixed Route Systems

This section sets out the basic acquisition requirements for a public entity purchasing a new vehicle. Generally, the section requires any public entity who purchases or leases a new vehicle to acquire an accessible vehicle. There is a waiver provision if lifts are unavailable and these provisions track the conditions in the ADA. One statutory condition, that the public entity has made a good faith effort to locate a qualified manufacturer to supply the lifts, presumes a direct relationship between the transit provider and the lift manufacturer. In fact, it is the bus manufacturer, rather than the transit provider directly, who would have the task of looking for a supplier of lifts to meet the transit provider's specifications. The task must still be performed, but the regulation does not require the transit provider to obtain actual information about available lifts. Rather the bus manufacturer obtains the information and provides this assurance to the entity applying for the waiver, and the entity may rely on this representation. More specifically, the regulation requires that each waiver request must include a copy of the written solicitation (showing that it requested lift-equipped vehicles) and written responses from lift manufacturers to the vehicle manufacturer documenting their inability to provide the lifts. The information from the lift manufacturer must also include when the lifts will be available.

In addition, the waiver request must include copies of advertisements in trade publications and inquiries to trade associations seeking lifts for the buses. The public entity also must include a full justification for the assertion that a delay in the bus procurement sufficient to obtain a lift-equipped bus would significantly impair transportation services in the community. There is no length of time that would be a *per se* delay constituting a ''significant impairment''. It will be more difficult to obtain a waiver if a relatively short rather than relatively lengthy delay is involved. A showing of timetables, absent a showing of significant impairment of actual transit services, would not form a basis for granting a waiver.

Any waiver granted by the Department under this provision will be a conditional waiver. The conditions are intended to ensure that the waiver provision does not create a loophole in the accessible vehicle acquisition requirement that Congress intended to impose. The ADA requires a waiver to be limited in duration and the rule requires a termination date to be included. The date will be established on the basis of the information the Department receives concerning the availability of lifts in the waiver request and elsewhere. In addition, so that a waiver does not become open-ended, it will apply only to a particular procurement. If a transit agency wants a waiver for a subsequent delivery of buses in the procurement, or another procurement entirely, it will have to make a separate waiver request.

For example, if a particular order of buses is delivered over a period of time, each delivery would be the potential subject of a waiver request. First, the entity would request a waiver for the first shipment of buses. If all of the conditions are met, the waiver would be granted, with a date specified to coincide with the due date of the lifts. When the lifts become available those buses would have to be retrofitted with the lifts. A subsequent delivery of buses—on the same order—would have to receive its own waiver, subject to the same conditions and specifications of the first waiver.

The purpose of the waiver, as the Department construes it, is to address a situation in which (because of a sudden increase in the number of lift-equipped buses requested) lift manufacturers are unable to produce enough lifts to meet the demand in a timely fashion.

Section 37.73 Purchase or Lease of Used Non-Rail Vehicles by Public Entities Operating a Fixed Route System

The basic rule is that an acquisition of a used vehicle would have to be for an accessible vehicle.

There is an exception, however, for situations in which the transit provider makes a good faith effort to obtain accessible used vehicles but does not succeed in finding them. The ADA requires transit agencies to purchase accessible used vehicles, providing a ''demonstrated good faith efforts'' exception to the requirement. The reports of the Senate Committee on Labor and Human Resources and the House Committee on Education and Labor offered the following guidance on what ''good faith efforts'' involve:

The phrase ''demonstrated good faith efforts'' is intended to require a nationwide search and not a search limited to a particular region. For instance, it would not be enough for a transit operator to contact only the manufacturer where the transit authority usually does business to see if there are accessible used buses. It involves the transit authority advertising in a trade magazine, i.e., Passenger Transport, or contacting the transit trade association, American Public Transit Association (APTA), to determine whether accessible used vehicles are available. It is the Committee's expectation that

as the number of buses with lifts increases, the burden on the transit authority to demonstrate its inability to purchase accessible vehicles despite good faith efforts will become more and more difficult to satisfy. S. Rept. 101–116 at 49; H. Rept. 101–485 at 90.

Consistent with this guidance, this section requires that good faith efforts include specifying accessible vehicles in bid solicitations. The section also requires that the entity retain for two years documentation of that effort, and that the information be available to FTA and the public.

It does not meet the good faith efforts requirement to purchase inaccessible, rather than accessible, used buses, just because the former are less expensive, particularly if the difference is a difference attributable to the presence of a lift. There may be situations in which good faith efforts involve buying fewer accessible buses in preference to more inaccessible buses.

The public participation requirements involved in the development of the paratransit plans for all fixed route operators requires an ongoing relationship, including extensive outreach, to the community likely to be using its accessible service. We believe that it will be difficult to comply with the public participation requirements and not involve the affected community in the decisions concerning the purchase or lease of used accessible vehicles.

There is an exception to these requirements for donated vehicles. Not all ''zero dollar'' transfers are donations, however. The legislative history to this provision provides insight.

It is not the Committee's intent to make the vehicle accessibility provisions of this title applicable to vehicles donated to a public entity. The Committee understands that it is not usual to donate vehicles to a public entity. However, there could be instances where someone could conceivably donate a bus to a public transit operator in a will. In such a case, the transit operators should not be prevented from accepting a gift.

The Committee does not intend that this limited exemption for donated vehicles be used to circumvent the intent of the ADA. For example, a local transit authority could not arrange to be the recipient of donated inaccessible buses. This would be a violation of the ADA. S. Rpt. 101–116, at 46; H. Rpt. 101–486, at 87.

Entities interested in accepting donated vehicles must submit a request to FTA to verify that the transaction is a donation.

There is one situation, in which a vehicle has prior use is not treated as a used vehicle. If a vehicle has been remanufactured, and it is within the period of the extension of its useful life, it is not viewed as a used vehicle (see H. Rept. 101–485, Pt 1 at 27). During this period, such a vehicle may be acquired by another entity without going through the good faith efforts process. This is because, at the time of its remanufacture, the bus would have been made as accessible if feasible. When the vehicle has completed its extended useful life (e.g., the beginning of year six when its useful life has extended five years), it becomes subject to used bus requirements.

Section 37.75 Remanufacture of Non-Rail Vehicles and Purchase or Lease of Remanufactured Non-rail Vehicles by Public Entities Operating Fixed Route Systems

This section tracks the statute closely, and contains the following provisions. First, it requires any public entity operating a fixed route system to purchase an accessible vehicle if the acquisition occurs after August 25, 1990, if the vehicle is remanufactured after August 25, 1990, or the entity contracts or undertakes the remanufacture of a vehicle after August 25, 1990. The ADA legislative history makes it clear that remanufacture is to include changes to the structure of the vehicle which extend the useful life of the vehicle for five years. It clearly is not intended to capture things such as engine overhauls and the like.

The term remanufacture, as used in the ADA context, is different from the use of the term in previously issued FTA guidance. The term has a specific meaning under the ADA: there must be structural work done to the vehicle and the work must extend the vehicle's useful life by five years.

The ADA imposes no requirements on what FTA traditionally considers bus rehabilitation. Such work involves rebuilding a bus to original specifications and focuses on mechanical systems and interiors. Often this work includes replacing components. It is less extensive than remanufacture.

The statute, and the rule, includes an exception for the remanufacture of historical vehicles. This exception applies to the remanufacture of or purchase of a remanufactured vehicle that (1) is of historic character; (2) operates solely on a segment of a fixed route system which is on the National Register of Historic Places; and (3) making the vehicle accessible would significantly alter the historic character of the vehicle. The exception only extends to the remanufacture that would alter the historic character of the vehicle. All modifications that can be made without altering the historic character (such as slip resistant flooring) must be done.

Section 37.77 Purchase or Lease of New Non-Rail Vehicles by Public Entities Operating a Demand Responsive System for the General Public

Section 224 of the ADA requires that a public entity operating a demand responsive system purchase or lease accessible new vehicles, for which a solicitation is made after August 25, 1990, unless the system, when

viewed in its entirety, provides a level of service to individuals with disabilities, including individuals who use wheelchairs, equivalent to the level of service provided to individuals without disabilities. This section is the same as the October 4, 1990 final rule which promulgated the immediately effective acquisition requirements of the ADA.

The Department has been asked to clarify what ''accessible when viewed in its entirety'' means in the context of a demand responsive system being allowed to purchase an inaccessible vehicle. First, it is important to note that this exception applies only to demand responsive systems (and not fixed route systems). The term ''equivalent service'' was discussed during the passage of the ADA. Material from the legislative history indicates that ''when viewed in its entirety/equivalent service'' means that ''when all aspects of a transportation system are analyzed, equal opportunities for each individual with a disability to use the transportation system must exist. (H. Rept. 101–184, Pt. 2, at 95; S. Rept. 101–116 at 54). For example, both reports said that ''the time delay between a phone call to access the demand responsive system and pick up the individual is not greater because the individual needs a lift or ramp or other accommodation to access the vehicle.'' (*Id.*)

Consistent with this, the Department has specified certain service criteria that are to be used when determining if the service is equivalent. As in previous rulemakings on this provision, the standards (which include service area, response time, fares, hours and days of service, trip purpose restrictions, information and reservations capability, and other capacity constraints) are not absolute standards. They do not say, for example, that a person with a disability must be picked up in a specified number of hours. The requirement is that there must be equivalent service for all passengers, whether or not they have a disability. If the system provides service to persons without disabilities within four hours of a call for service, then passengers with disabilities must be afforded the same service.

The Department has been asked specifically where an entity should send its ''equivalent level of service'' certifications. We provide the following: Equivalent level of service certifications should be submitted to the state program office if you are a public entity receiving FTA funds through the state. All other entities should submit their equivalent level of service certifications to the FTA regional office (listed in appendix B of this part). Certifications must be submitted before the acquisition of the vehicles.

Paragraph (e) of this section authorizes a waiver for the unavailability of lifts. Since demand responsive systems need not purchase accessible vehicles if they can certify equivalent service, the Department has been asked what this provision is doing in this section.

Paragraph (e) applies in the case in which an entity operates a demand responsive system, which is not equivalent, and the entity cannot find accessible vehicles to acquire. In this case, the waiver provisions applicable to a fixed route entity purchasing or leasing inaccessible new vehicles applies to the demand responsive operator as well.

Section 37.79 Purchase or Lease of New Rail Vehicles by Public Entities Operating Rapid or Light Rail Systems

This section echoes the requirement of §37.71—all new rail cars must be accessible.

Section 37.81 Purchase or Lease of Used Rail Vehicles by Public Entities Operating Rapid or Light Rail Systems

This section lays out the requirements for a public entity acquiring a used rail vehicle. The requirements and standards are the same as those specified for non-rail vehicles in §37.73. While we recognize it may create difficulties for entities in some situations, the statute does not include any extension or short-term leases. The Department will consider, in a case-by-case basis, how the good faith efforts requirement would apply in the case of an agreement between rail carriers to permit quick-response, short-term leases of cars over a period of time.

Section 37.83 Remanufacture of Rail Vehicles and Purchase or Lease of Remanufactured Rail Vehicles by Public Entities Operating Rapid or Light Rail System

This section parallels the remanufacturing section for buses, including the exception for historical vehicles. With respect to an entity having a class of historic vehicles that may meet the standards for the historic vehicle exception (e.g., San Francisco cable cars), the Department would not object to a request for application of the exception on a system-wide, as approved to car-by-car, basis.

Section 37.85 Purchase or Lease of New Intercity and Commuter Rail Cars

This section incorporates the statutory requirement that new intercity and commuter rail cars be accessible. The specific accessibility provisions of the statute (for example, there are slightly different requirements for intercity rail cars versus commuter rail cars) are specified in part 38 of this regulation. These standards are adopted from the voluntary guidelines issues by the Access Board. The section basically parallels the acquisition requirements for buses and other vehicles. It should be noted that the definition of commuter rail operator clearly allows for additional operators to qualify as commuter, since the definition describes the

functional characteristics of an operator, as well as listing existing commuter rail operators.

We would point out that the ADA applies this requirement to all new vehicles. This includes not only vehicles and systems that currently are being operated in the U.S., but new, experimental, or imported vehicles and systems. The ADA does not stand in the way of new technology, but it does require that new technology, and the benefits it brings, be accessible to all persons, including those with disabilities. This point applies to all vehicle acquisition provisions of this regulation, whether for rail or non-rail, private or public, fixed route or demand responsive vehicles and systems.

Section 37.87 Purchase or Lease of Used Intercity and Commuter Rail Cars

The section also parallels closely the requirements in the ADA for the purchase or lease of accessible used rail vehicles. We acknowledge that, in some situations, the statutory requirement for to make good faith efforts to acquire accessible used vehicles may create difficulties for rail operators attempting to lease rail cars quickly for a short time (e.g., as fill-ins for cars which need repairs). In some cases, it may be possible to mitigate these difficulties through means such as making good faith efforts with respect to an overall agreement between two rail operators to make cars available to one another when needed, rather than each time a car is provided under such an agreement.

Section 37.89 Remanufacture of Intercity and Commuter Rail Cars

This section requires generally that remanufactured cars be made accessible, to the maximum extent feasible. Feasible is defined in paragraph (c) of the section to be ''unless an engineering analysis demonstrates that remanufacturing the car to be accessible would have a significant adverse effect on the structural integrity of the car.'' Increased cost is not a reason for viewing other sections of this subpart concerning remanufactured vehicles.

In addition, this section differs from the counterpart sections for non-rail vehicles and light and rapid rail vehicles in two ways. First, the extension of useful life needed to trigger the section is ten rather than five years. Second, there is no historic vehicle exception. Both of these differences are statutory.

Remanufacture of vehicles implies work that extends their expected useful life of the vehicle. A mid-life overhaul, not extending the total useful life of the vehicle, would not be viewed as a remanufacture of the vehicle.

Section 37.93 One Car Per Train Rule

This section implements the statutory directive that all rail operators (light, rapid, commuter and intercity) have at least one car per train accessible to persons with disabilities, including individuals who use wheelchairs by July 26, 1995. (See ADA sections 242(a)(1), 242(b)(1), 228(b)(1).) Section 37.93 contains this general requirement. In some cases, entities will meet the one-car-per train rule through the purchase of new cars. In this case, since all new rail vehicles have to be accessible, compliance with this provision is straightforward.

However, certain entities may not be purchasing any new vehicles by July 26, 1995, or may not be purchasing enough vehicles to ensure that one car per train is accessible. In these cases, these entities will have to retrofit existing cars to meet this requirement. What a retrofitted car must look like to meet the requirement has been decided by the Access Board. These standards are contained in part 38 of this rule.

We would point that, consistent with the Access Board standards, a rail system using mini-high platforms or wayside lifts is not required, in most circumstances, to ''double-stop'' in order to give passengers a chance to board the second or subsequent car in a train at the mini-high platform or way-side lift. The only exception to this would be a situation in which all the wheelchair positions spaces in the first car were occupied. In this case, the train would have to double-stop to allow a wheelchair user to board, rather than passing the person by when there was space available in other than the first car.

Section 37.95 Ferries and Other Passenger Vessels

Although at this time there are no specific requirements for vessels, ferries and other passenger vessels operated by public entities are subject to the requirements of §37.5 of this part and applicable requirements of 28 CFR part 35, the DOJ rule under title II of the ADA.

SUBPART E—ACQUISITION OF ACCESSIBLE VEHICLES BY PRIVATE ENTITIES

Section 37.101 Purchase or Lease of Non-Rail Vehicles by Private Entities Not Primarily Engaged in the Business of Transporting People

Section 37.103 Purchase or Lease of New Non-Rail Vehicles by Private Entities Primarily Engaged in the Business of Transporting People

Section 37.105 Equivalent Service Standard

The first two sections spell out the distinctions among the different types of service elaborated in the ADA and requirements

that apply to them. For clarity, we provide the following chart.

PRIVATE ENTITIES "NOT PRIMARILY ENGAGED"

System type	Vehicle capacity	Requirement
Fixed Route	Over 16	Acquire accessible vehicle.
Fixed Route	16 or less	Acquire accessible vehicle, or equivalency.
Demand Responsive.	Over 16	Acquire accessible vehicle, or equivalency.
Demand Responsive.	16 or less	Equivalency—see §37.171.

PRIVATE ENTITIES "PRIMARILY ENGAGED"

System type	Vehicle type/capacity	Requirement
Fixed route	All new vehicles except auto, van with less than 8 capacity, or over the road bus.	Acquire accessible vehicle.
Demand responsive.	Same as above	Acquire accessible vehicle, or equivalency.
Either fixed route or demand responsive.	New vans with a capacity of less than 8.	Same as above.

Equivalency, for purposes of these requirements, is spelled out in §37.105. It is important to note that some portions of this section (referring to response time, reservations capacity, and restrictions on trip purpose) apply only to demand responsive systems. Another provision (schedules/headways) applies only to fixed route systems. This is because these points of comparison apply only to one or the other type system. The remaining provisions apply to both kinds of systems.

In applying the provisions this section, it is important to note that they are only points of comparison, not substantive criteria. For example, unlike the response time criterion of §37.131, this section does not require that a system provide any particular response time. All it says is that, in order for there to be equivalency, if the demand responsive system gets a van to a non-disabled person in 2 hours, or 8 hours, or a week and a half after a call for service, the system must get an accessible van to a person with a disability in 2 hours, or 8 hours, or a week and a half.

The vehicle acquisition and equivalency provisions work together in the following way. A private entity is about to acquire a vehicle for a transportation service in one of the categories to which equivalency is relevant. The entity looks at its present service (considered without regard to the vehicle it plans to acquire). Does the present service meet the equivalency standard? (In answering this question, the point of reference is the next potential customer who needs an accessible vehicle. The fact that such persons have not called in the past is irrelevant). If not, the entity is required to acquire an accessible vehicle. If so, the entity may acquire an accessible or an inaccessible vehicle. This process must be followed every time the entity purchases or leases a vehicle. Given changes in the mixes of both customers and vehicles, the answer to the question about equivalency will probably not be the same for an entity every time it is asked.

One difference between the requirements for "private, not primarily" and "private, primarily" entities is that the requirements apply to all vehicles purchased or leased for the former, but only to new vehicles for the latter. This means that entities in the latter category are not required to acquire accessible vehicles when they purchase or lease used vehicles. Another oddity in the statute which entities should note is that the requirement for "private, primarily" entities to acquire accessible vans with less than eight passenger capacity (or provide equivalent service) does not become effective until after February 25, 1992 (This also date also applies no private entities "primarily engaged" which purchase passenger rail cars). All other vehicle acquisition requirements became effective after August 25, 1990.

The Department views the line between "private, primarily" and "private, not primarily" entities as being drawn with respect to the bus, van, or other service which the entity is providing. For example, there is an obvious sense in which an airline or car rental company is primarily engaged in the business of transporting people. If the airline or car rental agency runs a shuttle bus from the airport terminal to a downtown location or a rental car lot, however, the Department views that shuttle service as covered by the "private, not primarily" requirements of the rule (see discussion of the Applicability sections above). This is because the airline or car rental agency is not primarily engaged in the business of providing transportation by bus or van. The relationship of the bus or van service to an airline's main business is analogous to that of a shuttle to a hotel. For this purpose, it is of only incidental interest that the main business of the airline is flying people around the country instead of putting them up for the night.

Section 37.109 Ferries and Other Passenger Vessels

Although at this time there are no specific requirements for vessels, ferries and other passenger vessels operated by private entities are subject to the requirements of §37.5 of this part and applicable requirements of 28 CFR part 36, the DOJ rule under title III of the ADA.

SUBPART F—PARATRANSIT AS A COMPLEMENT TO FIXED ROUTE SERVICE

Section 37.121 Requirement for Comparable Complementary Paratransit Service

This section sets forth the basic requirement that all public entities who operate a fixed route system have to provide paratransit service that is both comparable and complementary to the fixed route service. By ''complementary,'' we mean service that acts as a ''safety net'' for individuals with disabilities who cannot use the fixed route system. By ''comparable,'' we mean service that meets the service criteria of this subpart.

This requirement applies to light and rapid rail systems as well as to bus systems, even when rail and bus systems share all or part of the same service area. Commuter bus, commuter rail and intercity rail systems do not have to provide paratransit, however. The remaining provisions of subpart F set forth the details of the eligibility requirements for paratransit, the service criteria that paratransit systems must meet, the planning process involved, and the procedures for applying for waivers based on undue financial burden.

Paratransit may be provided by a variety of modes. Publicly operated dial-a-ride vans, service contracted out to a private paratransit provider, user-side subsidy programs, or any combination of these and other approaches is acceptable. Entities who feel it necessary to apply for an undue financial burden waiver should be aware that one of the factors FTA will examine in evaluating waiver requests is efficiencies the provider could realize in its paratransit service. Therefore, it is important for entities in this situation to use the most economical and efficient methods of providing paratransit they can devise.

It is also important for them to establish and consistently implement strong controls against fraud, waste and abuse in the paratransit system. Fraud, waste and abuse can drain significant resources from a system and control of these problems is an important ''efficiency for any paratransit system. It will be difficult for the Department to grant an undue financial burden waiver to entities which do not have a good means of determining if fraud, waste and abuse are problems and adequate methods of combating these problems, where they are found to exist.

Section 37.123 ADA Paratransit Eligibility—Standards

General Provisions

This section sets forth the minimum requirements for eligibility for complementary paratransit service. All fixed route operators providing complementary paratransit must make service available at least to individuals meeting these standards. The ADA does not prohibit providing paratransit service to anyone. Entities may provide service to additional persons as well. Since only service to ADA eligible persons is required by the rule, however, only the costs of this service can be counted in the context of a request for an undue financial burden waiver.

When the rule says that ADA paratransit eligibility shall be strictly limited to persons in the eligible categories, then, it is not saying that entities are in any way precluded from serving other people. It is saying that the persons who must be provided service, and counting the costs of providing them service, in context of an undue burden waiver, are limited to the regulatory categories.

TEMPORARY DISABILITIES

Eligibility may be based on a temporary as well as a permanent disability. The individual must meet one of the three eligibility criteria in any case, but can do so for a limited period of time. For example, if an individual breaks both legs and is in two casts for several weeks, becomes a wheelchair user for the duration, and the bus route that would normally take him to work is not accessible, the individual could be eligible under the second eligibility category. In granting eligibility to such a person, the entity should establish an expiration date for eligibility consistent with the expected end of the period disability.

TRIP-BY-TRIP ELIGIBILITY

A person may be ADA paratransit eligible for some trips but not others. Eligibility does not inhere in the individual or his or her disability, as such, but in meeting the functional criteria of inability to use the fixed route system established by the ADA. This inability is likely to change with differing circumstances.

For example, someone whose impairment-related condition is a severe sensitivity to temperatures below 20 degrees is not prevented from using fixed route transit when the temperature is 75 degrees. Someone whose impairment-related condition is an inability to maneuver a wheelchair through snow is not prevented from using fixed route transit when there is no snow on the ground. Someone with a cognitive disability may have learned to take the same bus route to a supported employment job every day. This individual is able to navigate the system for work purposes and therefore would not be eligible for paratransit for work trips. But the individual may be unable to get to other destinations on the bus system without getting lost, and would be eligible for paratransit for non-work trips. Someone who normally drives his own car to a rail system park and ride lot may have a specific impairment related condition preventing him from getting

to the station when his car is in the shop. A person who can use accessible fixed route service can go to one destination on an accessible route; another destination would require the use of an inaccessible route. The individual would be eligible for the latter but not the former.

In many cases, though the person is eligible for some trips but not others, eligibility determinations would not have to be made literally on a trip-by-trip basis. It may often be possible to establish the conditions on eligibility as part of the initial eligibility determination process. Someone with a temperature sensitivity might be granted seasonal eligibility. Somebody who is able to navigate the system for work but not nonwork trips could have this fact noted in his or her eligibility documentation. Likewise, someone with a variable condition (e.g., multiple sclerosis, HIV disease, need for kidney dialysis) could have their eligibility based on the underlying condition, with paratransit need for a particular trip dependent on self-assessment or a set of medical standards (e.g., trip within a certain amount of time after a dialysis session). On the other hand, persons in the second eligibility category (people who can use accessible fixed route service where it exists) would be given service on the basis of the particular route they would use for a given trip.

Because entities are not precluded from providing service beyond that required by the rule, an entity that believes it is too difficult to administer a program of trip-by-trip eligibility is not required to do so. Nothing prevents an entity from providing all requested trips to a person whom the ADA requires to receive service for only some trips. In this case, if the entity intends to request an undue financial burden waiver, the entity, as provided in the undue burden provisions of this rule, must estimate, by a statistically valid technique, the percentage of its paratransit trips that are mandated by the ADA. Only that percentage of its total costs will be counted in considering the undue burden waiver request.

CATEGORY 1 ELIGIBILITY

The first eligibility category includes, among others, persons with mental or visual impairments who, as a result, cannot ''navigate the system.'' This eligibility category includes people who cannot board, ride, or disembark from an accessible vehicle ''without the assistance of another individual.'' This means that, if an individual needs an attendant to board, ride, or disembark from an accessible fixed route vehicles (including ''navigating the system''), the individual is eligible for paratransit. One implication of this language is that an individual does not lose paratransit eligibility based on ''inability to navigate the system'' because the individual chooses to travel with a friend on the paratransit system (even if the friend could help the person navigate the fixed route system). Eligibility in this category is based on ability to board, ride, and disembark independently.

Mobility training (e.g., of persons with mental or visual impairments) may help to improve the ability of persons to navigate the system or to get to a bus stop. Someone who is successfully mobility trained to use the fixed route system for all or some trips need not be provided paratransit service for those trips. The Department encourages entities to sponsor such training as a means of assisting individuals to use fixed route rather than paratransit.

CATEGORY 2 ELIGIBILITY

The second eligibility criterion is the broadest, with respect to persons with mobility impairments, but its impact should be reduced over time as transit systems become more accessible. This category applies to persons who could use accessible fixed route transportation, but accessible transportation is not being used at the time, and on the route, the persons would travel. This concept is route based, not system based.

Speaking first of bus systems, if a person is traveling from Point A to Point B on route 1, and route 1 is accessible, the person is not eligible for paratransit for the trip. This is true even though other portions of the system are still inaccessible. If the person is traveling from Point A to Point C on route 2, which is not accessible, the person is eligible for that trip. If the person is traveling from Point A to Point B on accessible route 1, with a transfer at B to go on inaccessible route 3 to Point D, then the person is eligible for the second leg of the trip. (The entity could choose to provide a paratransit trip from A to D or a paratransit or on-call bus trip from B to D.)

For purposes of this standard, we view a route as accessible when all buses scheduled on the route are accessible. Otherwise, it is unlikely that an accessible vehicle could be provided ''within a reasonable period of [a] time'' when the individual wants to travel, as the provision requires. We recognize that some systems' operations may not be organized in a way that permits determining whether a given route is accessible, even though a route-by-route determination appears to be contemplated by the statute. In such cases, it may be that category 2 eligibility would persist until the entire system was eligible.

With respect to a rail system, an individual is eligible under this standard if, on the route or line he or she wants to use, there is not yet one car per train accessible or if key stations are not yet accessible. This eligibility remains even if bus systems covering the area served by the rail system have

become 100 percent accessible. This is necessary because people use rail systems for different kinds of trips than bus systems. It would often take much more in the way of time, trouble, and transfers for a person to go on the buses of one or more transit authorities than to have a direct trip provided by the rail operator. Since bus route systems are often designed to feed rail systems rather than duplicate them, it may often be true that ''you can't get there from here'' relying entirely on bus routes or the paratransit service area that parallels them.

If the lift on a vehicle cannot be deployed at a particular stop, an individual is eligible for paratransit under this category with respect to the service to the inaccessible stop. If on otherwise accessible route 1, an individual wants to travel from Point A to Point E, and the lift cannot be deployed at E, the individual is eligible for paratransit for the trip. (On-call bus would not work as a mode of providing this trip, since a bus lift will not deploy at the stop.) This is true even though service from Point A to all other points on the line is fully accessible. In this circumstance, the entity should probably think seriously about working with the local government involved to have the stop moved or made accessible.

When we say that a lift cannot be deployed, we mean literally that the mechanism will not work at the location to permit a wheelchair user or other person with a disability to disembark or that the lift will be damaged if it is used there. It is not consistent with the rule for a transit provider to declare a stop off-limits to someone who uses the lift while allowing other passengers to use the stop. However, if temporary conditions not under the operator's control (e.g., construction, an accident, a landslide) make it so hazardous for anyone to disembark that the stop is temporarily out of service for all passengers may the operator refuse to allow a passenger to disembark using the lift.

CATEGORY 3 ELIGIBILITY

The third eligibility criterion concerns individuals who have a specific impairment-related condition which prevents them from getting to or from a stop or station. As noted in the legislative history of the ADA, this is intended to be a ''very narrow exception'' to the general rule that difficulty in traveling to or from boarding or disembarking locations is not a basis for eligibility.

What is a specific impairment-related condition? The legislative history mentions four examples: Chronic fatigue, blindness, a lack of cognitive ability to remember and follow directions, or a special sensitivity to temperature. Impaired mobility, severe communications disabilities (e.g., a combination of serious vision and hearing impairments), cardiopulmonary conditions, or various other serious health problems may have similar effects. The Department does not believe that it is appropriate, or even possible, to create an exhaustive list.

What the rule uses as an eligibility criterion is not just the existence of a specific impairment-related condition. To be a basis for eligibility, the condition must prevent the individual from traveling to a boarding location or from a disembarking location. The word ''prevent'' is very important. For anyone, going to a bus stop and waiting for a bus is more difficult and less comfortable than waiting for a vehicle at one's home. This is likely to be all the more true for an individual with a disability. But for many persons with disabilities, in many circumstances, getting to a bus stop is possible. If an impairment related condition only makes the job of accessing transit more difficult than it might otherwise be, but does not prevent the travel, then the person is not eligible.

For example, in many areas, there are not yet curb cuts. A wheelchair user can often get around this problem by taking a less direct route to a destination than an ambulatory person would take. That involves more time, trouble, and effort than for someone without a mobility impairment. But the person can still get to the bus stop. On the basis of these architectural barriers, the person would not be eligible.

Entities are cautioned that, particularly in cases involving lack of curb cuts and other architectural barrier problems, assertions of eligibility should be given tight scrutiny. Only if it is apparent from the facts of a particular case that an individual cannot find a reasonable alternative path to a location should eligibility be granted.

If we add a foot of snow to the scenario, then the same person taking the same route may be unable to get to the bus stop. It is not the snow alone that stops him; it is the interaction of the snow and the fact that the individual has a specific-impairment related condition that requires him to push a wheelchair through the snow that prevents the travel.

Inevitably, some judgment is required to distinguish between situations in which travel is prevented and situations in which it is merely made more difficult. In the Department's view, a case of ''prevented travel'' can be made not only where travel is literally impossible (e.g., someone cannot find the bus stop, someone cannot push a wheelchair through the foot of snow or up a steep hill) but also where the difficulties are so substantial that a reasonable person with the impairment-related condition in question would be deterred from making the trip.

The regulation makes the interaction between an impairment-related condition and the environmental barrier (whether distance, weather, terrain, or architectural barriers) the key to eligibility determinations. This is

an individual determination. Depending on the specifics of their impairment-related condition, one individual may be able to get from his home to a bus stop under a given set of conditions, while his next-door neighbor may not.

COMPANIONS

The ADA requires entities to provide paratransit to one person accompanying the eligible individual, with others served on a space-available basis. The one individual who is guaranteed space on the vehicle can be anyone—family member, business associate, friend, date, etc. The provider cannot limit the eligible individual's choice of type of companion. The transit authority may require that the eligible individual reserve a space for the companion when the individual reserves his or her own ride. This one individual rides even if this means that there is less room for other eligible individuals. Additional individuals beyond the first companion are carried only on a space available basis; that is, they do not displace other ADA paratransit eligible individuals.

A personal care attendant (i.e., someone designated or employed specifically to help the eligible individual meet his or her personal needs) always may ride with the eligible individual. If there is a personal care attendant on the trip, the eligible individual may still bring a companion, plus additional companions on a space available basis. The entity may require that, in reserving the trip, the eligible individual reserve the space for the attendant.

To prevent potential abuse of this provision, the rule provides that a companion (e.g., friend or family member) does not count as a personal care attendant unless the eligible individual regularly makes use of a personal care attendant and the companion is actually acting in that capacity. As noted under §37.125, a provider may require that, as part of the initial eligibility certification process, an individual indicate whether he or she travels with a personal care attendant. If someone does not indicate the use of an attendant, then any individual accompanying him or her would be regarded simply as a companion.

To be viewed as ''accompanying'' the eligible individual, a companion must have the same origin and destination points as the eligible individual. In appropriate circumstances, entities may also wish to provide service to a companion who has either an origin or destination, but not both, with the eligible individual (e.g., the individual's date is dropped off at her own residence on the return trip from a concert).

Section 37.125 ADA Paratransit Eligibility—Process

This section requires an eligibilty process to be established by each operator of complementary paratransit. The details of the process are to be devised through the planning and public participation process of this subpart. The process may not impose unreasonable administrative burdens on applicants, and, since it is part of the entity's nondiscrimination obligations, may not involve ''user fees'' or application fees to the applicant.

The process may include functional criteria related to the substantive eligibility criteria of §37.123 and, where appropriate, functional evaluation or testing of applicants. The substantive eligibility process is not aimed at making a medical or diagnostic determination. While evaluation by a physician (or professionals in rehabilitation or other relevant fields) may be used as part of the process, a diagnosis of a disability is not dispositive. What is needed is a determination of whether, as a practical matter, the individual can use fixed route transit in his or her own circumstances. That is a transportation decision primarily, not a medical decision.

The goal of the process is to ensure that only people who meet the regulatory criteria, strictly applied, are regarded as ADA paratransit eligible. The Department recognizes that transit entities may wish to provide service to other persons, which is not prohibited by this rule. However, the eligibility process should clearly distinguish those persons who are ADA eligible from those who are provided service on other grounds. For example, eligibility documentation must clearly state whether someone is ADA paratransit eligible or eligible on some other basis.

Often, people tend to think of paratransit exclusively in terms of people with mobility impairments. Under the ADA, this is not accurate. Persons with visual impairments may be eligible under either the first or third eligibility categories. To accommodate them, all documents concerning eligibility must be made available in one or more accessible formats, on request. Accessible formats include computer disks, braille documents, audio cassettes, and large print documents. A document does not necessarily need to be made available in the format a requester prefers, but it does have to be made available in a format the person can use. There is no use giving a computer disk to someone who does not have a computer, for instance, or a braille document to a person who does not read braille.

When a person applies for eligibility, the entity will provide all the needed forms and instructions. These forms and instructions

may include a declaration of whether the individual travels with a personal care attendant. The entity may make further inquiries concerning such a declaration (e.g., with respect to the individual's actual need for a personal care attendant).

When the application process is complete—all necessary actions by the applicant taken—the entity should process the application in 21 days. If it is unable to do so, it must begin to provide service to the applicant on the 22nd day, as if the application had been granted. Service may be terminated only if and when the entity denies the application. All determinations shall be in writing; in the case of a denial, reasons must be specified. The reasons must specifically relate the evidence in the matter to the eligibility criteria of this rule and of the entity's process. A mere recital that the applicant can use fixed route transit is not sufficient.

For people granted eligibility, the documentation of eligibility shall include at least the following information:

—The individual's name
—The name of the transit provider
—The telephone number of the entity's paratransit coordinator
—An expiration date for eligibility
—Any conditions or limitations on the individual's eligibility, including the use of a personal care attendant.

The last point refers to the situation in which a person is eligible for some trips but not others. Or if the traveler is authorized to have a personal care attendant ride free of charge. For example, the documentation may say that the individual is eligible only when the temperature falls below a certain point, or when the individual is going to a destination not on an accessible bus route, or for non-work trips, etc.

As the mention of an expiration date implies, certification is not forever. The entity may recertify eligibility at reasonable intervals to make sure that changed circumstances have not invalidated or changed the individual's eligibility. In the Department's view, a reasonable interval for recertification is probably between one and three years. Less than one year would probably be too burdensome for consumers; over three years would begin to lose the point of doing recertifications. The recertification interval should be stated in the entity's plan. Of course, a user of the service can apply to modify conditions on his or her eligibility at any time.

The administrative appeal process is intended to give applicants who have been denied eligibility the opportunity to have their cases heard by some official other than the one who turned them down in the first place. In order to have appropriate separation of functions—a key element of administrative due process—not only must the same person not decide the case on appeal, but that person, to the extent practicable, should not have been involved in the first decision (e.g., as a member of the same office, or a supervisor or subordinate of the original decisionmaker). When, as in the case of a small transit operator, this degree of separation is not feasible, the second decisionmaker should at least be ''bubbled'' with respect to the original decision (i.e., not have participated in the original decision or discussed it with the original decisionmaker). In addition, there must be an opportunity to be heard in person as well as the chance to present written evidence and arguments. All appeals decisions must be in writing, stating the reasons for the decision.

To prevent the filing of stale claims, the entity may establish a 60 day ''statute of limitations'' on filing of appeals, the time starting to run on the date the individual is notified on the negative initial decision. After the appeals process has been completed (i.e., the hearing and/or written submission completed), the entity should make a decision within 30 days. If it does not, the individual must be provided service beginning the 31st day, until and unless an adverse decision is rendered on his or her appeal.

Under the eligibility criteria of the rule, an individual has a right to paratransit if he or she meets the eligibility criteria. As noted in the discussion of the nondiscrimination section, an entity may refuse service to anindividual with a disability who engages in violent, seriously disruptive, or illegal conduct, using the same standards for exclusion that would apply to any other person who acted in such an inappropriate way.

The rule also allows an entity to establish a process to suspend, for a reasonable period of time, the provision of paratransit service to an ADA eligible person who establishes a pattern or practice of missing scheduled trips. The purpose of this process would be to deter or deal with chronic ''no-shows.'' The sanction system—articulated criteria for the imposition of sanctions, length of suspension periods, details of the administrative process, etc.—would be developed through the public planning and participation process for the entity's paratransit plan, and the result reflected in the plan submission to FTA.

It is very important to note that sanctions could be imposed only for a ''pattern or practice'' of missed trips. A pattern or practice involves intentional, repeated or regular actions, not isolated, accidental, or singular incidents. Moreover, only actions within the control of the individual count as part of a pattern or practice. Missed trips due to operator error are not attributable to the individual passenger for this purpose. If the vehicle arrives substantially after the scheduled pickup time, and the passenger has given up on the vehicle and taken a taxi or gone down

the street to talk to a neighbor, that is not a missed trip attributable to the passenger. If the vehicle does not arrive at all, or is sent to the wrong address, or to the wrong entrance to a building, that is not a missed trip attributable to the passenger. There may be other circumstances beyond the individual's control (e.g., a sudden turn for the worse in someone with a variable condition, a sudden family emergency) that make it impracticable for the individual to travel at the scheduled time and also for the individual to notify the entity in time to cancel the trip before the vehicle comes. Such circumstances also would not form part of a sanctionable pattern or practice.

Once an entity has certified someone as eligible, the individual's eligibility takes on the coloration of a property right. (This is not merely a theoretical statement. If one depends on transportation one has been found eligible for to get to a job, and the eligibility is removed, one may lose the job. The same can be said for access to medical care or other important services.) Consequently, before eligibility may be removed ''for cause'' under this provision, the entity must provide administrative due process to the individual.

If the entity proposes to impose sanctions on someone, it must first notify the individual in writing (using accessible formats where necessary). The notice must specify the basis of the proposed action (e.g., Mr. Smith scheduled trips for 8 a.m. on May 15, 2 p.m. on June 3, 9 a.m. on June 21, and 9:20 p.m. on July 10, and on each occasion the vehicle appeared at the scheduled time and Mr. Smith was nowhere to be found) and set forth the proposed sanction (e.g., Mr. Smith would not receive service for 15 days).

The entity would provide the individual an opportunity to be heard (i.e., an in-person informal hearing before a decisionmaker) as well as to present written and oral information and arguments. All relevant entity records and personnel would be made available to the individual, and other persons could testify. It is likely that, in many cases, an important factual issue would be whether a missed trip was the responsibility of the provider or the passenger, and the testimony of other persons and the provider's records or personnel are likely to be relevant in deciding this issue. While the hearing is intended to be informal, the individual could bring a representative (e.g., someone from an advocacy organization, an attorney).

The individual may waive the hearing and proceed on the basis of written presentations. If the individual does not respond to the notice within a reasonable time, the entity may make, in effect, a default finding and impose sanctions. If there is a hearing, and the individual needs paratransit service to attend the hearing, the entity must provide it. We would emphasize that, prior to a finding against the individual after this due process procedure, the individual must continue to receive service. The entity cannot suspend service while the matter is pending.

The entity must notify the individual in writing about the decision, the reasons for it, and the sanctions imposed, if any. Again, this information would be made available in accessible formats. In the case of a decision adverse to the individual, the administrative appeals process of this section would apply. The sanction would be stayed pending an appeal.

There are means other than sanctions, however, by which a transit provider can deal with a ''no-show'' problem in its system. Providers who use ''real time scheduling'' report that this technique is very effective in reducing no-shows and cancellations, and increasing the mix of real time scheduling in a system can probably be of benefit in this area. Calling the customer to reconfirm a reasonable time before pickup can head off some problems, as can educating consumers to call with cancellations ahead of time. Training of dispatch and operator personnel can help to avoid miscommunications that lead to missed trips.

Section 37.127 Complementary Paratransit for Visitors

This section requires each entity having a complementary paratransit system to provide service to visitors from out of town on the same basis as it is provided to local residents. By ''on the same basis,'' we mean under all the same conditions, service criteria, etc., without distinction. For the period of a visit, the visitor is treated exactly like an eligible local user, without any higher priority being given to either.

A visitor is defined as someone who does not reside in the jurisdiction or jurisdictions served by the public entity or other public entities with which it coordinates paratransit service. For example, suppose a five-county metropolitan area provides coordinated paratransit service under a joint plan. A resident of any of the five counties would not be regarded as a visitor in any of them. Note that the rule talks in terms of ''jurisdiction'' rather than ''service area.'' If an individual lives in XYZ County, but outside the fixed route service area of that county's transit provider, the individual is still not a visitor for purposes of paratransit in PQR County, if PQR is one of the counties with which XYZ provides coordinated paratransit service.

A visitor can become eligible in one of two ways. The first is to present documentation from his or her ''home'' jurisdiction's paratransit system. The local provider will give ''full faith and credit'' to the ID card or other documentation from the other entity. If the individual has no such documentation, the local provider may require the provision

of proof of visitor status (i.e., proof of residence somewhere else) and, if the individual's disability is not apparent, proof of the disability (e.g., a letter from a doctor or rehabilitation professional). Once this documentation is presented and is satisfactory, the local provider will make service available on the basis of the individual's statement that he or she is unable to use the fixed route transit system.

The local provider need serve someone based on visitor eligibility for no more than 21 days. After that, the individual is treated the same as a local person for eligibility purposes. This is true whether the 21 days are consecutive or parceled out over several shorter visits. The local provider may require the erstwhile visitor to apply for eligibility in the usual local manner. A visitor who expects to be around longer than 21 days should apply for regular eligibility as soon as he arrives. The same approach may be used for a service of requested visits totaling 21 days or more in a relating compact period of time. Preferably, this application process should be arranged before the visitor arrives, by letter, telephone or fax, so that a complete application can be processed expeditiously.

Section 37.129 Types of Service

The basic mode of service for complementary paratransit is demand responsive, origin-to-destination service. This service may be provided for persons in any one of the three eligibility categories, and must always be provided to persons in the first category (e.g., people who cannot navigate the system). The local planning process should decide whether, or in what circumstances, this service is to be provided as door-to-door or curb-to-curb service.

For persons in the second eligibility category (e.g., persons who can use accessible buses, but do not have an accessible bus route available to take them to their destination), origin-to-destination service can be used. Alternatively, the entity can provide either of two other forms of service. One is on-call bus, in which the individual calls the provider and arranges for one or more accessible buses to arrive on the routes he needs to use at the appropriate time. On-call bus service must meet all the service criteria of §37.131, except that on-call buses run only on fixed routes and the fare charged can be only the fixed route fare that anyone pays on the bus (including discounts).

The second option is ''feeder paratransit'' to an accessible fixed route that will take the individual to his or her destination. Feeder paratransit, again, would have to meet all the criteria of §37.131. With respect to fares, the paratransit fare could be charged, but the individual would not be double charged for the trip. That is, having paid the paratransit fare, the transfer to the fixed route would be free.

For persons in the third eligibility category (e.g., persons who can use fixed route transit but who, because of a specific impairment-related condition, cannot get to or from a stop), the ''feeder paratransit'' option, under the conditions outlined above, is available. For some trips, it might be necessary to arrange for feeder service at both ends of the fixed route trip. Given the more complicated logistics of such arrangements, and the potential for a mistake that would seriously inconvenience the passenger, the transit provider should consider carefully whether such a ''double feeder'' system, while permissible, is truly workable in its system (as opposed to a simpler system that used feeder service only at one end of a trip when the bus let the person off at a place from which he or she could independently get to the destination). There may be some situations in which origin to destination service is easier and less expensive.

Section 37.131 Service Criteria for Complementary Paratransit Service Area

The basic bus system service area is a corridor with a width of ¾ of a mile on each side of each fixed route. At the end of a route, there is a semicircular ''cap'' on the corridor, consisting of a three-quarter mile radius from the end point of the route to the parallel sides of the corridor.

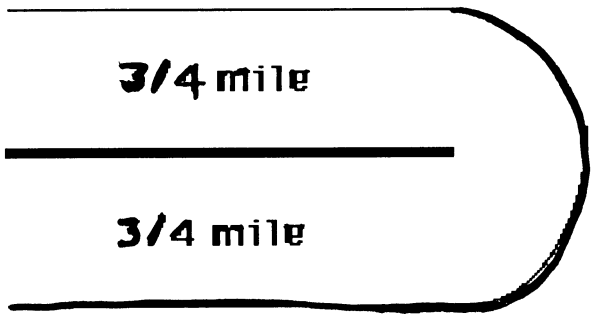

Complementary paratransit must provide service to any origin or destination point within a corridor fitting this description around any route in the bus system. Note that this does not say that an eligible user must live within a corridor in order to be eligible. If an individual lives outside the corridor, and can find a way of getting to a pickup point within the corridor, the service must pick him up there. The same holds true at the destination end of the trip.

Another concept involved in this service criterion is the core service area. Imagine a bus route map of a typical city. Color the bus routes and their corridors blue, against the white outline map. In the densely populated areas of the city, the routes (which, with their corridors attached, cut 1½ mile swaths) merge together into a solid blue mass. There are few, if any, white spots left uncovered, and they are likely to be very small. Paratransit would serve all origins and destinations in the solid blue mass.

But what of the little white spots surrounded by various bus corridors? Because it would make sense to avoid providing service to such small isolated areas, the rule requires paratransit service there as well. So color them in too.

Outside the core area, though, as bus routes follow radial arteries into the suburbs and exurbs (we know real bus route maps are more complicated than this, but we simplify for purposes of illustration), there are increasingly wide white areas between the blue corridors, which may have corridors on either side of them but are not small areas completely surrounded by corridors. These white spaces are not part of the paratransit service area and the entity does not have to serve origins and destinations there. However, if, through the planning process, the entity wants to enlarge the width of one or more of the blue corridors from the ¾ of a mile width, it can do so, to a maximum of 1½ miles on each side of a route. The cost of service provided within such an expanded corridor can be counted in connection with an undue financial burden waiver request.

There may be a part of the service area where part of one of the corridors overlaps a political boundary, resulting in a requirement to serve origins and destinations in a neighboring jurisdiction which the entity lacks legal authority to service. The entity is not required to serve such origins and destinations, even though the area on the other side of the political boundary is within a corridor. This exception to the service area criterion does not automatically apply whenever there is a political boundary, only when there is a legal bar to the entity providing service on the other side of the boundary.

The rule requires, in this situation, that the entity take all practicable steps to get around the problem so that it can provide service throughout its service area. The entity should work with the state or local governments involved, via coordination plans, reciprocity agreements, memoranda of understanding or other means to prevent political boundaries from becoming barriers to the travel of individuals with disabilities.

The definition of the service area for rail systems is somewhat different, though many of the same concepts apply.

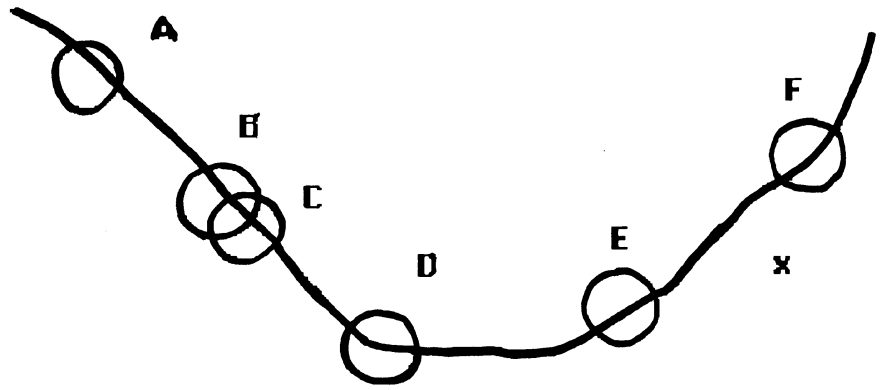

Around each station on the line (whether or not a key station), the entity would draw a circle with a radius of ¾ mile. Some circles may touch or overlap. The series of circles is the rail system's service area. (We recognize that, in systems where stations are close together, this could result in a service area that approached being a corridor like that of a bus line.) The rail system would provide paratransit service from any point in one circle to any point in any other circle. The entity would not have to provide service to two points within the same circle, since a trip between two points in the vicinity of the same station is not a trip that typically would be taken by train. Nor would the entity have to provide service to spaces between the circles. For example, a train trip would not get close to point x; one would have to take a bus or other mode of transportation to get from station E or F to point x. A paratransit system comparable to the rail service area would not be required to take someone there either.

Rail systems typically provide trips that are not made, or cannot be made conveniently, on bus systems. For example, many rail systems cross jurisdictional boundaries that bus systems often do not. One can travel from Station A to a relatively distant Station E on a rail system in a single trip, while a bus trip between the same points, if possible at all, may involve a number of indirect routings and transfers, on two bus systems that may not interface especially well.

Rail operators have an obligation to provide paratransit equivalents of trips between circles to persons who cannot use fixed route rail systems because they cannot navigate the system, because key stations or trains are not yet accessible, or because they cannot access stations from points within the circles because of a specific impairment-related condition. For individuals who are eligible in category 2 because they need an accessible key station to use the system, the paratransit obligation extends only to transportation among ''circles'' centered on designated key stations (since, even when the key station plan is fully implemented, these individuals will be unable to use non-key stations).

It is not sufficient for a rail operator to refer persons with disabilities to an accessible bus system in the area. The obligation to provide paratransit for a rail system is independent of the operations of any bus system serving the same area, whether operated by the same entity that operates the rail system or a different entity. Obviously, it will be advantageous for bus and rail systems to coordinate their paratransit efforts, but a coordinated system would have to ensure coverage of trips comparable to rail trips that could not conveniently be taken on the fixed route bus system.

RESPONSE TIME

Under this provision, an entity must make its reservation service available during the hours its administrative offices are open. If those offices are open 9 to 5, those are the hours during which the reservations service must be open, even if the entity's transit service operated 6 a.m. to midnight. On days prior to a service day on which the administrative offices are not open at all (e.g., a Sunday prior to a Monday service day), the reservation service would also be open 9 to 5. Note that the reservation service on any day

does not have to be provided directly by a ''real person.'' An answering machine or other technology can suffice.

Any caller reaching the reservation service during the 9 to 5 period, in this example, could reserve service for any time during the next 6 a.m. to 12 midnight service day. This is the difference between ''next day scheduling'' and a system involving a 24-hour prior reservation requirement, in which a caller would have to reserve a trip at 7 a.m. today if he or she wanted to travel at 7 a.m. tomorrow. The latter approach is not adequate under this rule.

The entity may use real time scheduling for all or part of its service. Like the Moliere character who spoke prose all his life without knowing it, many entities may already be using some real time scheduling (e.g., for return trips which are scheduled on a when-needed basis, as opposed to in advance). A number of transit providers who have used real time scheduling believe that it is more efficient on a per-trip basis and reduces cancellations and no-shows significantly. We encourage entities to consider this form of service.

Sometimes users want to schedule service well in advance, to be sure of traveling when they want to. The rule tells providers to permit reservations to be made as much as 14 days in advance. In addition, though an entity may negotiate with a user to adjust pick-up and return trip times to make scheduling more efficient, the entity cannot insist on scheduling a trip more than one hour earlier or later than the individual desires to travel. Any greater deviation from desired trip would exceed the bounds of comparability.

FARES

To calculate the proper paratransit fare, the entity would determine the route(s) that an individual would take to get from his or her origin to his or her destination on the fixed route system. At the time of day the person was traveling, what is the fare for that trip on those routes? Applicable charges like transfer fees or premium service charges may be added to the amount, but discounts (e.g., the half-fare discount for off-peak fixed route travel by elderly and handicapped persons) would not be subtracted. The transit provider could charge up to twice the resulting amount for the paratransit trip.

The mode through which paratransit is provided does not change the method of calculation. For example, if paratransit is provided via user side subsidy taxi service rather than publicly operated dial-a-ride van service, the cost to the user could still be only twice the applicable fixed route fare. The system operates the same regardless of whether the paratransit trip is being provided in place of a bus or a rail trip the user cannot make on the fixed route system. Where bus and rail systems are run by the same provider (or where the same bus provider runs parallel local and express buses along the same route), the comparison would be made to the mode on which a typical fixed route user would make the particular trip, based on schedule, length, convenience, avoidance of transfers, etc.

Companions are charged the same fare as the eligible individual they are accompanying. Personal care attendants ride free.

One exception to the fare requirement is made for social service agency (or other organization-sponsored) trips. This exception, which allows the transit provider to negotiate a price with the agency that is more than twice the relevant fixed route fare, applies to ''agency trips,'' by which we mean trips which are guaranteed to the agency for its use. That is, if an agency wants 12 slots for a trip to the mall on Saturday for clients with disabilities, the agency makes the reservation for the trips in its name, the agency will be paying for the transportation, and the trips are reserved to the agency, for whichever 12 people the agency designates, the provider may then negotiate any price it can with the agency for the trips. We distinguish this situation from one in which an agency employee, as a service, calls and makes an individual reservation in the name of a client, where the client will be paying for the transportation.

RESTRICTIONS AND PRIORITIES BASED ON TRIP PURPOSE

This is a simple and straightforward requirement. There can be no restrictions or priorities based on trip purpose in a comparable complementary paratransit system. When a user reserves a trip, the entity will need to know the origin, destination, time of travel, and how many people are traveling. The entity does not need to know why the person is traveling, and should not even ask.

HOURS AND DAYS OF SERVICE

This criterion says simply that if a person can travel to a given destination using a given fixed route at a given time of day, an ADA paratransit eligible person must be able to travel to that same destination on paratransit at that time of day. This criterion recognizes that the shape of the service area can change. Late at night, for example, it is common for certain routes not to be run. Those routes, and their paratransit corridors, do not need to be served with paratransit when the fixed route system is not running on them. One couldn't get to destinations in that corridor by fixed route at those times, so paratransit service is not necessary either.

It should be pointed out that service during low-demand times need not be by the same paratransit mode as during higher usage periods. For example, if a provider

uses its own paratransit vans during high demand periods, it could use a private contractor or user-side subsidy provider during low demand periods. This would presumably be a more efficient way of providing late night service. A call-forwarding device for communication with the auxiliary carrier during these low demand times would be perfectly acceptable, and could reduce administrative costs.

CAPACITY CONSTRAINTS

This provision specifically prohibits two common mechanisms that limit use of a paratransit system so as to constrain demand on its capacity. The first is a waiting list. Tyically, a waiting list involves a determination by a provider that it can provide service only to a given number of eligible persons. Other eligible persons are not able to receive service until one of the people being served moves away or otherwise no longer uses the service. Then the persons on the waiting list can move up. The process is analogous to the wait that persons in some cities have to endure to be able to buy season tickets to a sold-out slate of professional football games.

The second mechanism specifically mentioned is a number limit on the trips a passenger can take in a given period of time. It is a kind of rationing in which, for example, if one has taken his quota of 30 trips this month, he cannot take further trips for the rest of the month.

In addition, this paragraph prohibits any operational pattern or practice that significantly limits the availability of service of ADA paratransit eligible persons. As discussed under §37.125 in the context of missed trips by passengers, a ''pattern or practice'' involves, regular, or repeated actions, not isolated, accidental, or singular incidents. A missed trip, late arrival, or trip denial now and then does not trigger this provision.

Operational problems outside the control of the entity do not count as part of a pattern or practice under this provision. For example, if the vehicle has an accident on the way to pick up a passenger, the late arrival would not count as part of a pattern or practice. If something that could not have been anticipated at the time the trip was scheduled (e.g., a snowstorm, an accident or hazardous materials incident that traps the paratransit vehicle, like all traffic on a certain highway, for hours), the resulting missed trip would not count as part of a pattern or practice. On the other hand, if the entity regularly does not maintain its vehicles well, such that frequent mechanical breakdowns result in missed trips or late arrivals, a pattern or practice may exist. This is also true in a situation in which scheduling practices fail to take into account regularly occurring traffic conditions (e.g., rush hour traffic jams), resulting in frequent late arrivals.

The rule mentions three specific examples of operational patterns or practices that would violate this provision. The first is a pattern or practice of substantial numbers of significantly untimely pickups (either for initial or return trips). To violate this provision, there must be both a substantial number of late arrivals and the late arrivals in question must be significant in length. For example, a DOT Inspector General's (IG) report on one city's paratransit system disclosed that around 30 percent of trips were between one and five hours late. Such a situation would trigger this provision. On the other hand, only a few instances of trips one to five hours late, or many instances of trips a few minutes late, would not trigger this provision.

The second example is substantial numbers of trip denials or missed trips. For example, if on a regular basis the reservation phone lines open at 5 a.m. and callers after 7 a.m. are all told that they cannot travel, or the phone lines shut down after 7 a.m. and a recorded message says to call back the next day, or the phone lines are always so busy that no one can get through, this provision would be triggered. (Practices of this kind would probably violate the response time criterion as well.) Also, if, on a regular basis, the entity misses a substantial number of trips (e.g., a trip is scheduled, the passenger is waiting, but the vehicle never comes, goes to the wrong address, is extremely late, etc.), it would violate this provision.

The third example is substantial numbers of trips with excessive trip lengths. Since paratransit is a shared ride service, paratransit rides between Point A and Point B will usually take longer, and involve more intermediate stops, than a taxi ride between the same two points. However, when the number of intermediate stops and the total trip time for a given passenger grows so large as to make use of the system prohibitively inconvenient, then this provision would be triggered. For example, the IG report referred to above mentioned a situation in which 9 percent of riders had one way trips averaging between two and four hours, with an average of 16 intermediate stops. Such a situation would probably trigger this provision.

Though these three examples probably cover the most frequently cited problems in paratransit operations that directly or indirectly limit the provision of service that is theoretically available to eligible persons, the list is not exhaustive. Other patterns or practices could trigger this provision. For example, the Department has heard about a situation in which an entity's paratransit contractor was paid on a per-trip basis, regardless of the length of the trip. The contractor therefore had an economic incentive

to provide as many trips as possible. As a result, the contractor accepted short trips and routinely denied longer trips. This would be a pattern or practice contrary to this provision (and contrary to the service area provision as well).

ADDITIONAL SERVICE

This provision emphasizes that entities may go beyond the requirements of this section in providing service to ADA paratransit individuals. For example, no one is precluded from offering service in a larger service area, during greater hours than the fixed route system, or without charge. However, costs of such additional service do not count with respect to undue financial burden waiver requests. Where a service criterion itself incorporates a range of actions the entity may take (e.g., providing wide corridors outside the urban core, using real time scheduling), however, costs of providing that optional service may be counted for undue financial burden waiver request purposes.

Section 37.133 Subscription Service

As part of its paratransit service, an entity may include a subscription service component. However, at any given time of day, this component may not absorb more than 50 percent of available capacity on the total system. For example, if, at 8 a.m., the system can provide 400 trips, no more than 200 of these can be subscription trips.

The one exception to this rule would occur in a situation in which there is excess non-subscription capacity available. For example, if over a long enough period of time to establish a pattern, there were only 150 non-subscription trips requested at 8 a.m., the provider could begin to provide 250 subscription trips at that time. Subsequently, if non-subscription demand increased over a period of time, such that the 50 trips were needed to satisfy a regular non-subscription demand at that time, and overall system capacity had not increased, the 50 trips would have to be returned to the non-subscription category. During times of high subscription demand, entities could use the trip time negotiation discretion of §37.131(c)(2) to shift some trips to other times.

Because subscription service is a limited subcomponent of paratransit service, the rule permits restrictions to be imposed on its use that could not be imposed elsewhere. There may be a waiting list for provision of subscription service or the use of other capacity constraints. Also, there may be restrictions or priorities based on trip purpose. For example, subscription service under peak work trip times could be limited to work trips. We emphasize that these limitations apply only to subscription service. It is acceptable for a provider to put a person on a waiting list for access to subscription service at 8 a.m. for work trips; the same person could not be wait-listed for access to paratransit service in general.

Section 37.135 Submission of Paratransit Plans

This section contains the general requirements concerning the submission of paratransit plans. Each public entity operating fixed route service is required to develop and submit a plan for paratransit service. Where you send your plans depends on the type of entity you are. There are two categories of entities which should submit their plans to states—(1) FTA recipients and (2) entities who are administered by the state on behalf of FTA.

These FTA grantees submit their plans to the states because the agency would like the benefit of the states' expertise before final review. The states' role is as a commenter, not as a reviewer.

This section also specifies annual progress reports concerning the meeting of previously approved milestones, any slippage (with the reasons for it and plans to catch up), and any significant changes in the operator's environment, such as the withdrawal from the marketplace of a private paratransit provider or whose service the entity has relied upon to provide part of its paratransit service.

Paragraph (d) of this section specifies a maximum time period for the phase-in of the implementation of paratransit plans. The Department recognizes that it is not reasonable to expect paratransit systems to spring into existence fully formed, like Athena from the head of Zeus. Under this paragraph, all entities must be in full compliance with all paratransit provisions by January 26, 1997, unless the entity has received a waiver from FTA based on undue financial burden (which applies only to the service criteria of §37.131, not to eligibility requirements or other paratransit provisions).

While the rule assumes that most entities will take a year to fully implement these provisions, longer than a year requires the paratransit plans to submit milestones that are susceptible to objective verification. Not all plans will be approved with a five-year lead-in period. Consistent with the proposed rule, the Department intends to look at each plan individually to see what is required for implementation in each case. DOT may approve only a shorter phase-in period in a given case.

Section 37.137 Paratransit Plan Development

Section 35.137 establishes three principal requirements in the development of paratransit plans.

First is the requirement to survey existing paratransit services within the service area. This is required by section 223(c)(8) of the ADA. While the ADA falls short of explicitly

requiring coordination, clearly this is one of the goals. The purpose of the survey is to determine what is being provided already, so that a transit provider can accurately assess what additional service is needed to meet the service criteria for comparable paratransit service. The plan does not have to discuss private paratransit providers whose services will not be used to help meet paratransit requirements under this rule. However, the public entity will need to know specifically what services are being provided by whom if the entity is to count the transportation toward the overall need.

Since the public entity is required to provide paratransit to all ADA paratransit eligible individuals, there is some concern that currently provided service may be cut back or eliminated. It is possible that this may happen and such action would have a negative effect on transportation provided to persons with disabilities in general. The Department urges each entity required to submit a plan to work with current providers of transportation, not only to determine what transportation services they provide, but also to continue to provide service into the foreseeable future.

Second, §37.137 specifies requirements for public participation. First, the entity must perform outreach, to ensure that a wide range of persons anticipated to use the paratransit service know about and have the opportunity to participate in the development of the plan. Not only must the entity identify who these individuals or groups are, the entity also must contact the people at an early stage in the development process.

The other public participation requirements are straightforward. There must be a public hearing and an opportunity to comment. The hearing must be accessible to those with disabilities, and notice of the hearing must be accessible as well. There is a special efforts test identified in this paragraph for comments concerning a multi-year phase-in of a paratransit plan.

The final general requirement of the section specifies that efforts at public participation must be made permanent through some mechanism that provides for participation in all phases of paratransit plan development and submission. The Department is not requiring that there be an advisory committee established, although this is one method of institutionalizing participation. The Department is not as interested in the specific structure used to ensure public participation as we are interested in the effectiveness of the effort.

The Department believes that public participation is a key element in the effective implementation of the ADA. The ADA is an opportunity to develop programs that will ensure the integration of all persons into not just the transportation system of America, but all of the opportunities transportation makes possible. This opportunity is not without tremendous challenges to the transit providers. It is only through dialogue, over the long term, that usable, possible plans can be developed and implemented.

Section 37.139 Plan Contents

This section contains substantive categories of information to be contained in the paratransit plan: Information on current and changing fixed route service; inventory of existing paratransit service; discussion of the discrepancies between existing paratransit and what is required under this regulation; a discussion of the public participation requirements and how they have been met; the plan for paratransit service; the budget for paratransit services; efforts to coordinate with other transportation providers; a description of the process in place or to be used to register ADA paratransit eligible individuals; a description of the documentation provided to each individual verifying eligibility; and a request for a waiver based on undue financial burden, if applicable. The final rule contains a reorganized and slightly expanded section on plan contents, reflecting requests to be more explicit, rather than less explicit.

The list of required elements is the same for all entities required to submit paratransit plans. There is no document length requirement, however. Each entity (or group plan) is unique and we expect the plans to reflect this. While we would like the plan elements presented in the order listed in this section, the contents most likely will vary greatly, depending on the size, geographic area, budget, complexity of issues, etc. of the particular submitting agency.

This section and §37.139 provide for a maximum phase-in period of five years, with an assumed one-year phase-in for all paratransit programs. (The required budget has been changed to five years as well.) The Department has established a maximum five-year phase-in in the belief that not all systems will require that long, but that some, particularly those which had chosen to meet compliance with section 504 requirements with accessible fixed route service, may indeed need five years.

We are confident that, through the public participation process, entities can develop a realistic plan for full compliance with the ADA. To help ensure this, the paratransit plan contents section now requires that any plan which projects full compliance after January 26, 1993 must include milestones which can be measured and which result in steady progress toward full compliance. For example, it is possible that the first part of year one is used to ensure comprehensive registration of all eligible persons with disabilities, training of transit provider staffs and the development and dissemination of information to users and potential users in

accessible formats and some modest increase in paratransit service is provided. A plan would not be permitted to indicate that no activity was possible in the first year, but proportionately more progress could be planned for later years than for the first year. Implementation must begin in January 1992.

Each plan, including its proposed phase-in period, will be the subject of examination by FTA. Not all providers who request a five-year phase-in will receive approval for a five-year phase-in. The plan must be careful, therefore, to explain what current services are, what the projections are, and what methods are in place to determine and provide accountability for progress toward full compliance.

We have been asked for assistance in assessing what the demand for paratransit service will be. FTA's ADA Paratransit Manual provides detailed assistance in this and many other areas of the plan development process.

The ADA itself contained a figure of 43 million persons with disabilities. It should be pointed out that many of these may not necessarily be eligible for ADA paratransit service. The Department's regulatory impact analysis discussing the probable costs involved in implementing this rule places the possible percentage of population who would be eligible for paratransit service at between 1.4 and 1.9 percent. This figure can vary depending on the type and variety of services you have available, or on such things as climate, proximity to medical care, family, etc. that a person with a disability may need. Clearly estimating demand is one of the most critical elements in the plan, since it will be used to make decisions about all of the various service criteria.

Section 37.139 contains a new paragraph (j), spelling out in more detail requirements related to the annual submission of plans. Since there is now the possibility for five-year phase-ins, the annual plan demonstrates the progress made to date, and explains any delays.

Section 37.141 Requirements If a Joint Plan is Submitted

The Department believes that, particularly in large, multi-provider regions, a coordinated regional paratransit plan and system are extremely important. Such coordination can do much to ensure that the most comprehensive transportation can be provided with the most efficient use of available resources. We recognize that the effort of putting together such a coordinated system can be a lengthy one. This section is intended to facilitate the process of forming such a coordinated system.

If a number of entities wish to submit a joint plan for a coordinated system, they must, like other entities, submit a document by January 26, 1992. At a minimum, this document must include the following:

(1) A general statement that the participating entities intend to file a joint coordinated plan;

(2) A certification from each participating entity that it is committed to providing paratransit as a part of a coordinated plan;

(3) A certification from each participating entity that it will maintain at least current levels of paratransit service until the coordinated paratransit service called for by the joint plan is implemented;

(4) As many elements of the plan as possible.

These provisions ensure that significant planning will precede, and plan implementation will begin by, January 26, 1992, without precluding entities from cooperating because it was not possible to complete coordinating different public entities by that date. The entities involved in a joint plan are required to submit all elements of their plan by July 26, 1992.

The final provision in the section notes that an entity may later join a coordinated plan, even if it has filed its own plan on January 26, 1992. An entity must submit its own plan by January 26, 1992, if it has not provided a certification of participation in a joint plan.). In this case, the entity must provide the assurances and certifications required of all of the other participating entities.

The Department fully expects that many jurisdictions filing joint plans will be able to do so by January 26, 1992. For those who cannot, the regulatory provision ensures that there will be no decrease in paratransit service. Further, since we anticipate coordinated service areas to provide more effective service, complete implementation of a joint plan could be more rapid than if each entity was providing service on its own.

Entities submitting a joint plan do not have any longer than any other entities to fully implement complementary paratransit service. In any case, all plans (joint or single) must be fully implemented by January 26, 1997, absent a waiver for undue financial burden (which would, in the case of a joint plan, be considered on a joint basis).

Section 37.143 Paratransit Plan Implementation

As already discussed under §37.135, the states will receive FTA recipient plans for section 18 recipients administered by the State or any small urbanized area recipient of section 9 funds administered by a state. Public entities who do not receive FTA funds will submit their plans directly to the applicable Regional Office (listed in appendix B to the rule).

The role of the state is to accept the plans on behalf of FTA, to ensure that all plans are submitted to it and forward the plans, with

any comments on the plans, to FTA. This comment is very important for FTA to receive, since states administer these programs on behalf of FTA. Each state's specific knowledge of FTA grantees it administers will provide helpful information to FTA in making its decisions.

The rule lists five questions the states must answer when they forward the plans. These questions are gauged to capitalize on the working knowledge the states possess on the grantees. FTA will send a more specific letter of instruction to each state explaining its role.

Section 37.147 FTA Review of Plans

This provision spells out factors FTA will consider in reviewing each plan, including whether the submission is complete, whether the plan complies with the substance of the ADA regulation, whether the entity complied with the public participation requirements in developing the plan, efforts by the entity to coordinate with other entities in a plan submission, and any comments submitted by the states.

These elements are not the only items that will be reviewed by FTA. Every portion of the plan will be reviewed and assessed for compliance with the regulation. This section merely highlights those provisions thought most important by the Department.

Section 37.151 Waiver for Undue Financial Burden

The Department has adopted a five-year phase-in for paratransit service. Under this scheme, each entity required to provide paratransit service will be able to design a phase-in of its service specifically geared to local circumstances. While all jurisdictions will not receive approval for plans with a five year phase-in, each entity will be able to request what it needs based on local circumstances. Generally, the section allows an entity to request a wavier at any time it determines that it will not be able to meet a five-year phase-in or make measured progress toward its full compliance date specified in its original plan.

A waiver for undue financial burden should be requested if one of the following circumstances applies. First, when the entity submits its first plan on January 26, 1992, if the entity knows it will not be able to reach full compliance within five years, or if the entity cannot make measured progress the first year it may submit a waiver request. The entity also should apply for a waiver, if, during plan implementation, there are changed circumstances which make it unlikely that compliance will be possible.

The concept of measured progress should be given its plain meaning. It is not acceptable to submit a plan which shows significant progress in implementing a plan in years four and five, but no progress in years one and two. Similarly, the progress must be susceptible to objective verification. An entity cannot merely ''work toward'' developing a particular aspect of a plan.

The Department intends that undue burden waiver requests will be given close scrutiny, and waiver will not be granted highly. In reviewing requests, however, as the legislative history indicates, FTA will look at the individual financial constraints within which each public entity operates its fixed route system. ''Any determination of undue financial burden cannot have assumed the collection of additional revenues, such as those received through increases in local taxes or legislative appropriations, which would not have otherwise been made available to the fixed route operator.'' (H. Rept. 101–485, Pt. 1, at 31)

Section 37.153 FTA Waiver Determination

If the FTA Administrator grants a waiver for undue financial burden, the waiver will be for a specified period of time and the Administrator will determine what the entity must do to meet its responsibilities under the ADA. Each determination will involve a judgment of what is appropriate on a case-by-case basis. Since each waiver will be granted based on individual circumstances, the Department does not deem it appropriate to specify a generally applicable duration for a waiver.

When a waiver is granted, the rule calls for entities to look first at limiting the number of trips provided to each individual as a means of providing service that does not create an undue burden. This capacity constraint, unlike manipulations of other service criteria, will not result in a degradation of the quality of service. An entity intending to submit an undue burden waiver request should take this approach into account in its planning process.

It should be noted that requiring an entity to provide paratransit service at least during core hours along key routes is one option that the Administrator has available in making a decision about the service to be provided. This requirement stems from the statutory provision that the Administrator can require the entity to provide a minimum level of service, even if to do so would be an undue financial burden. Certainly part of a request for a waiver could be a locally endorsed alternative to this description of basic service. The rule states explicitly the Administrator's discretion to return the application for more information if necessary.

Section 37.155 Factors in Decision To Grant an Undue Financial Burden Waiver

Factors the Administrator will consider in making a decision whether to grant an

undue financial burden waiver request include effects on current fixed route service, reductions in other services, increases in fares, resources available to implement complementary paratransit over the period of the plan, current level of accessible service (fixed route and paratransit), cooperation among transit providers, evidence of increased efficiencies that have been or could be used, any unique circumstances that may affect the entity's ability to provide paratransit service, the level of per capita service being provided, both to the population as a whole and what is being or anticipated to be provided to persons who are eligible and registered to receive ADA paratransit service.

This final element allows some measure of comparability, regardless of the specific service criteria and should assist in a general assessment of level of effort.

It is only the costs associated with providing paratransit service to ADA-paratransit eligible persons that can be counted in assessing whether or not there is an undue financial burden. Two cost factors are included in the considerations which enhance the Administrator's ability to assess real commitment to these paratransit provisions.

First, the Department will allow a statistically valid methodology for estimating number of trips mandated by the ADA. While the regulation calls for a trip-by-trip determination of eligibility, this provision recognizes that this is not possible for some systems, particularly the large systems. Since only those trips provided to a person when he or she is ADA eligible may be counted in determining an undue financial burden, this provision is necessary.

Second, in determining costs to be counted toward providing paratransit service, paragraph (b)(3) allows an entity to include in its paratransit budget dollars to which it is legally entitled, but which, as a matter of state or local funding arrangements, are provided to another entity that is actually providing the paratransit service.

For example, a state government may provide a certain formula allocation of the revenue from a certain tax to each jurisdiction for use in providing transportation service at the local level. The funds, depending on local arrangements, may flow either to a transit authority—a regulated entity under this rule—or to a city or county government. If the funds go to the transit authority, they clearly may be counted in an undue burden calculation. In addition, however, this provision also allows funds that flow through the city or county government to be counted in the undue burden calculation, since they are basically the same funds and should not be treated differently based on the accident of previously-determined local arrangements. On the other hand, this provision does not allow funds of a private non-profit or other organization who uses Department of Health and Human Services grant or private contributions to be counted toward the entity's financial commitment to paratransit.

SUBPART G—PROVISION OF SERVICE

Section 37.161 Maintenance of Accessible Features—General

This section applies to all entities providing transportation services, public and private. It requires those entities to maintain in operative condition those features or facilities and equipment that make facilities and vehicles accessible to and usable by individuals with disabilities.

The ADA requires that, to the maximum extent feasible, facilities be accessible to and usable by individuals with disabilities. This section recognizes that it is not sufficient to provide features such as lift-equipped vehicles, elevators, communications systems to provide information to people with vision or hearing impairments, etc. if these features are not maintained in a manner that enables individuals with disabilities to use them. Inoperative lifts or elevators, locked accessible doors, accessible paths of travel that are blocked by equipment or boxes of materials are not accessible to or usable by individuals with disabilities.

The rule points out that temporary obstructions or isolated instances of mechanical failure would not be considered violations of the ADA or this rule. Repairs must be made ''promptly.'' The rule does not, and probably could not, state a time limit for making particular repairs, given the variety of circumstances involved. However, repairing accessible features must be made a high priority. Allowing obstructions or out of order accessibility equipment to persist beyond a reasonable period of time would violate this Part, as would mechanical failures due to improper or inadequate maintenance. Failure of the entity to ensure that accessible routes are free of obstruction and properly maintained, or failure to arrange prompt repair of inoperative elevators, lifts, or other accessibility-related equipment, would also violate this part.

The rule also requires that accommodations be made to individuals with disabilities who would otherwise use an inoperative accessibility feature. For example, when a rail system discovers that an elevator is out of order, blocking access to one of its stations, it could accommodate users of the station by announcing the problem at other stations to alert passengers and offer accessible shuttle bus service around the temporarily inaccessible station. If a public address system were out of order, the entity could designate personnel to provide information to customers with visual impairments.

Section 37.163 Keeping Vehicle Lifts in Operative Condition—Public Entities

This section applies only to public entities. Of course, like vehicle acquisition requirements and other provisions applying to public entities, these requirements also apply when private entities ''stand in the shoes'' of public entities in contracting situations, as provided in §37.23.

This section's first requirement is that the entity establish a system of regular and frequent maintenance checks of lifts sufficient to determine if they are operative.

Vehicle and equipment maintenance is an important component of successful accessible service. In particular, an aggressive preventive maintenance program for lifts is essential. Lifts remain rather delicate pieces of machinery, with many moving parts, which often must operate in a harsh environment of potholes, dust and gravel, variations in temperature, snow, slush, and deicing compounds. It is not surprising that they sometimes break down.

The point of a preventive maintenance program is to prevent breakdowns, of course. But it is also important to catch broken lifts as soon as possible, so that they can be repaired promptly. Especially in a bus system with relatively low lift usage, it is possible that a vehicle could go for a number of days without carrying a passenger who uses the lift. It is highly undesirable for the next passenger who needs a lift to be the person who discovers that the lift is broken, when a maintenance check by the operator could have discovered the problem days earlier, resulting in its repair.

Therefore, the entity must have a system for regular and frequent checks, sufficient to determine if lifts are actually operative. This is not a requirement for the lift daily. (Indeed, it is not, as such, a requirement for lift cycling at all. If there is another means available of checking the lift, it may be used.) If alternate day checks, for example, are sufficient to determine that lifts are actually working, then they are permitted. If a lift is used in service on a given day, that may be sufficient to determine that the lift is operative with respect to the next day. It would be a violation of this part, however, for the entity to neglect to check lifts regularly and frequently, or to exhibit a pattern of lift breakdowns in service resulting in stranded passengers when the lifts had not been checked before the vehicle failed to provide required accessibility to passengers that day.

When a lift breaks down in service, the driver must let the entity know about the problem by the most immediate means available. If the vehicle is equipped with a radio or telephone, the driver must call in the problem on the spot. If not, then the driver would have to make a phone call at the first opportunity (e.g., from a phone booth during the turnaround time at the end of the run). It is not sufficient to wait until the end of the day and report the problem when the vehicle returns to the barn.

When a lift is discovered to be inoperative, either because of an in-service failure or as the result of a maintenance check, the entity must take the vehicle out of service before the beginning of its next service day (with the exception discussed below) and repair the lift before the vehicle is put back into service. In the case of an in-service failure, this means that the vehicle can continue its runs on that day, but cannot start a new service day before the lift is repaired. If a maintenance check in the evening after completion of a day's run or in the morning before a day's runs discloses the problem, then the bus would not go into service until the repair had taken place.

The Department realizes that, in the years before bus fleets are completely accessible, taking buses with lifts out of service for repairs in this way would probably result in an inaccessible spare bus being used on the route, but at least attention would have to be paid quickly to the lift repair, resulting in a quicker return to service of a working accessible bus.

The rule provides an exception for those situations in which there is no spare vehicle (either accessible or inaccessible) available to take the place of the vehicle with an operative lift, such that putting the latter vehicle into the shop would result in a reduction of service to the public (e.g., a scheduled run on a route could not be made). The Department would emphasize that the exception does not apply when there is any spare vehicle available.

Where the exception does apply, the provider may keep the vehicle with the inoperative lift in service for a maximum of three days (for providers operating in an area of over 50,000 population) or five days (for providers operating in an area of 50,000 population or less). After these times have elapsed, the vehicle must go into the shop, not to return until the lift is repaired. Even during the three- or five-day period, if an accessible spare bus becomes available at any time, it must be used in place of the bus with the inoperative lift or an inaccessible spare that is being used in its place.

In a fixed route system, if a bus is operating without a working lift (either on the day when the lift fails in service or as the result of the exception discussed above) and headways between accessible buses on the route on which the vehicle is operating exceed 30 minutes, the entity must accommodate passengers who would otherwise be inconvenienced by the lack of an accessible bus. This accommodation would be by a paratransit or other special vehicle that would pick up passengers with disabilities

who cannot use the regular bus because its lift is inoperative. Passengers who need lifts in this situation would, in effect, be ADA paratransit eligible under the second eligibility category. However, since they would have no way of knowing that the bus they sought to catch would not be accessible that day, the transit authority must actively provide alternative service to them. This could be done, for example, by having a ''shadow'' accessible service available along the route or having the bus driver call in the minute he saw an accessible passenger he could not pick up (including the original passenger stranded by an in-service lift failure), with a short (i.e., less than 30-minute) response from an accessible vehicle dispatched to pick up the stranded passenger. To minimize problems in providing such service, when a transit authority is using the ''no spare vehicles'' exception, the entity could place the vehicle with the inoperative lift on a route with headways between accessible buses shorter than 30 minutes.

Section 37.165 Lift and Securement Use

This provision applies to both public and private entities.

All people using common wheelchairs (an inclusive term for mobility devices that fit on lifts meeting Access Board guideline dimensions—30″ by 48″ and a maximum of 600 pounds for device and user combined—which includes three-wheeled scooters and other so-called non-traditional mobility devices) are to be allowed to ride the entity's vehicles.

Entities may require wheelchair users to ride in designated securement locations. That is, the entity is not required to carry wheelchair users whose wheelchairs would have to park in an aisle or other location where they could obstruct other persons' passage or where they could not be secured or restrained. An entity's vehicle is not required to pick up a wheelchair user when the securement locations are full, just as the vehicle may pass by other passengers waiting at the stop if the bus is full.

The entity may require that wheelchair users make use of securement systems for their mobility devices. The entity, in other words, can require wheelchair users to ''buckle up'' their mobility devices. The entity is required, on a vehicle meeting part 38 standards, to use the securement system to secure wheelchairs as provided in that part. On other vehicles (e.g., existing vehicles with securement systems which do not comply with Part 38 standards), the entity must provide and use a securement system to ensure that the mobility device remains within the securement area. This latter requirement is a mandate to use best efforts to restrain or confine the wheelchair to the securement area. The entity does the best it can, given its securement technology and the nature of the wheelchair. The Department encourages entities with relatively less adequate securement systems on their vehicles, where feasible, to retrofit the vehicles with better securement systems, that can successfully restrain a wide variety of wheelchairs. It is our understanding that the cost of doing so is not enormous.

An entity may not, in any case, deny transportation to a common wheelchair and its user because the wheelchair cannot be secured or restrained by a vehicle's securement system, to the entity's satisfaction.

Entities have often recommended or required that a wheelchair user transfer out of his or her own device into a vehicle seat. Under this rule, it is no longer permissible to require such a transfer. The entity may provide information on risks and make a recommendation with respect to transfer, but the final decision on whether to transfer is up to the passenger.

The entity's personnel have an obligation to ensure that a passenger with a disability is able to take advantage of the accessibility and safety features on vehicles. Consequently, the driver or other personnel must provide assistance with the use of lifts, ramps, and securement devices. For example, the driver must deploy the lift properly and safely. If the passenger cannot do so independently, the driver must assist the passenger with using the securement device. On a vehicle which uses a ramp for entry, the driver may have to assist in pushing a manual wheelchair up the ramp (particularly where the ramp slope is relatively steep). All these actions my involve a driver leaving his seat. Even in entities whose drivers traditionally do not leave their seats (e.g., because of labor-management agreements or company rules), this assistance must be provided. This rule overrides any requirements to the contrary.

Wheelchair users—especially those using electric wheelchairs often have a preference for entering a lift platform and vehicle in a particular direction (e.g., backing on or going on frontwards). Except where the only way of successfully maneuvering a device onto a vehicle or into its securement area, or an overriding safety concern (i.e., a direct threat) requires one way of doing this or another, the transit provider should respect the passenger's preference. We note that most electric wheelchairs are usually not equipped with rearview mirrors, and that many persons who use them are not able to rotate their heads sufficiently to see behind. When an electric wheelchair must back up a considerable distance, this can have unfortunate results for other people's toes.

People using canes or walkers and other standees with disabilities who do not use wheelchairs but have difficulty using steps (e.g., an elderly person who can walk on a plane without use of a mobility aid but cannot raise his or her legs sufficiently to climb

bus steps) must also be permitted to use the lift, on request.

Section 37.167 Other Service Requirements

The requirements in this section apply to both public and private entities.

On fixed route systems, the entity must announce stops. These stops include transfer points with other fixed routes. This means that any time a vehicle is to stop where a passenger can get off and transfer to another bus or rail line (or to another form of transportation, such as commuter rail or ferry), the stop would be announced. The announcement can be made personally by the vehicle operator or can be made by a recording system. If the vehicle is small enough so that the operator can make himself or herself heard without a P.A. system, it is not necessary to use the system.

Announcements also must be made at major intersections or destination points. The rule does not define what major intersections or destination points are. This is a judgmental matter best left to the local planning process. In addition, the entity must make announcements at sufficient intervals along a route to orient a visually impaired passenger to his or her location. The other required announcements may serve this function in many instances, but if there is a long distance between other announcements, fill-in orientation announcements would be called for. The entity must announce any stop requested by a passenger with a disability, even if it does not meet any of the other criteria for announcement.

When vehicles from more than one route serve a given stop or station, the entity must provide a means to assist an individual with a visual impairment or other disability in determining which is the proper vehicle to enter. Some entities have used external speakers. FTA is undertaking a study to determine what is the best available technology in this area. Some transit properties have used colored mitts, or numbered cards, to allow passengers to inform drivers of what route they wanted to use. The idea is to prevent, at a stop where vehicles from a number of routes arrive, a person with a visual impairment from having to ask every driver whether the bus is the right one. The rule does not prescribe what means is to be used, only that some effective means be provided.

Service animals shall always be permitted to accompany their users in any private or public transportation vehicle or facility. One of the most common misunderstandings about service animals is that they are limited to being guide dogs for persons with visual impairments. Dogs are trained to assist people with a wide variety of disabilities, including individuals with hearing and mobility impairments. Other animals (e.g., monkeys) are sometimes used as service animals as well. In any of these situations, the entity must permit the service animal to accompany its user.

Part 38 requires a variety of accessibility equipment. This section requires that the entity use the equipment it has. For example, it would be contrary to this provision for a transit authority to bolt its bus lifts shut because transit authority had difficulty maintaining the lifts. It does little good to have a public address system on a vehicle if the operator does not use it to make announcements (except, as noted above, in the situation where the driver can make himself or herself heard without recourse to amplification.)

Entities must make communications and information available, using accessible formats and technology (e.g., Braille, large print, TDDs) to obtain information about transportation services. Someone cannot adequately use the bus system if schedule and route information is not available in a form he or she can use. If there is only one phone line on which ADA paratransit eligible individuals can reserve trips, and the line is chronically busy, individuals cannot schedule service. Such obstacles to the use of transportation service are contrary to this section. (The latter could, in some circumstances, be viewed as a capacity constraint.)

It is inconsistent with this section for a transit provider to refuse to let a passenger use a lift at any designated stop, unless the lift is physically unable to deploy or the lift would be damaged if it did deploy (see discussion under §37.123). In addition, if a temporary situation at the stop (e.g., construction, an accident, a landslide) made the stop unsafe for anyone to use, the provider could decline to operate the lift there (just as it refused to open the door for other passengers at the same point). The provider could not, however, declare a stop ''off limits'' to persons with disabilities that is used for other persons. If the transit authority has concerns about barriers or safety hazards that peculiarly affect individuals with disabilities that would use the stop, it should consider making efforts to move the stop.

Under DOT hazardous materials rules, a passenger may bring a portable medical oxygen supply on board a vehicle. Since the hazardous materials rules permit this, transit providers cannot prohibit it. For further information on hazardous materials rules, as they may affect transportation of assistive devices, entities may contact the Department's Research and Special Programs Administration, Office of Hazardous Materials Transportation (202–366–0656).

One concern that has been expressed is that transportation systems (particularly some rail systems) may make it difficult for persons with disabilities to board or disembark from vehicles by very rapidly closing doors on the vehicles before individuals with

disabilities (who may move more slowly through crowds in the vehicle or platform than other persons) have a chance to get on or off the vehicle. Doing so is contrary to the rule; operators must make appropriate provision to give individuals with disabilities adequate time to board or disembark.

Section 37.169 Interim Requirements for Over-the-Road Bus Service Operated by Private Entities

Private over-the-road bus (OTRB) service is, first of all, subject to all the other private entity requirements of the rule. The requirements of this section are in addition to the other applicable provisions.

Boarding assistance is required. The Department cannot require any particular boarding assistance devices at this time. Each operator may decide what mode of boarding assistance is appropriate for its operation. We agree with the discussion in the DOJ Title II rule's preamble that carrying is a disfavored method of providing assistance to an individual with a disability. However, since accessible private OTRBs cannot be required by this rule, there may be times when carrying is the only available means of providing access to an OTRB, if the entity does not exercise its discretion to provide an alternative means. It is required by the rule that any employee who provides boarding assistance—above all, who may carry or otherwise directly physically assist a passenger—must be trained to provide this assistance appropriately and safely.

The baggage priority provision for wheelchairs and other assistive devices involves a similar procedure to that established in the Department's Air Carrier Access Act rule (14 CFR part 382). In brief, it provides that, at any given stop, a person with a wheelchair or other assistive device would have the device loaded before other items at this stop. An individual traveling with a wheelchair is not similarly situated to a person traveling with luggage. For the wheelchair user, the wheelchair is an essential mobility device, without which travel is impossible. The rationale of this provision is that, while no one wants his or her items left behind, carrying the wheelchair is more important to its user than ordinary luggage to a traveler. If it comes to an either/or choice (the wheelchair user's luggage would not have any priority over other luggage, however). There would be no requirement, under this provision, for ''bumping'' baggage already on the bus from previous stops in order to make room for the wheelchair.

The entity could require advance notice from a passenger in only one circumstance. If a passenger needed boarding assistance, the entity could require up to 48 hours' advance notice for the purpose of providing needed assistance. While advance notice requirements are generally undesirable, this appears to be a case in which a needed accommodation may be able to be provided successfully only if the transportation provider knows in advance that some extra staffing is needed to accomplish it. While the primary need for advance notice appears to be in the situation of an unstaffed station, there could be other situations in which advance notice was needed in order to ensure that the accommodation could be made. Entities should not ask for advance notice in all cases, but just in those cases in which it is really needed for this purpose. Even if advance notice is not provided, the entity has the obligation to provide boarding assistance if it can be provided with available staff.

Section 37.171 Equivalency Requirement for Demand Responsive Service Operated by Private Entities Not Primarily in the Business of Transporting People

This provision is a service requirement closely related to the private entity requirements for §§37.101–37.105 of this part. Entities in this category are always required to provide equivalent service, regardless of what they are doing with respect to the acquisition of vehicles. The effect of this provision may be to require some entities to arrange, either through acquiring their own accessible vehicles or coordinating with other providers, to have accessible vehicles available to meet the equivalency standards of §37.105 or otherwise to comply with those standards.

Section 37.173 Training

A well-trained workforce is essential in ensuring that the accessibility-related equipment and accommodations required by the ADA actually result in the delivery of good transportation service to individuals with disabilities. The utility of training was recognized by Congress as well. (*See* S. Rept. 100–116 at 48.) At the same time, we believe that training should be conducted in an efficient and effective manner, with appropriate flexibility allowed to the organizations that must carry it out. Each transportation provider is to design a training program which suits the needs of its particular operation. While we are confident of this approach, we are mindful that the apparent lack of training has been a source of complaint to FTA and transit providers. Good training is difficult and it is essential.

Several points of this section deserve emphasis. First, the requirements for training apply to private as well as to public providers, of demand responsive as well as of fixed route service. Training is just as necessary for the driver of a taxicab, a hotel shuttle, or a tour bus as it is for a driver in an FTA-funded city bus system.

Second, training must be to proficiency. The Department is not requiring a specific course of training or the submission of a

training plan for DOT approval. However, every employee of a transportation provider who is involved with service to persons with disabilities must have been trained so that he or she knows what needs to be done to provide the service in the right way. When it comes to providing service to individuals with disabilities, ignorance is no excuse for failure.

While there is no specific requirement for recurrent or refresher training, there is an obligation to ensure that, at any given time, employees are trained to proficiency. An employee who has forgotten what he was told in past training sessions, so that he or she does not know what needs to be done to serve individuals with disabilities, does not meet the standard of being trained to proficiency.

Third, training must be appropriate to the duties of each employee. A paratransit dispatcher probably must know how to use a TDD and enough about various disabilities to know what sort of vehicle to dispatch. A bus driver must know how to operate lifts and securement devices properly. A mechanic who works on lifts must know how to maintain them. Cross-training, while useful in some instances, is not required, so long as each employee is trained to proficiency in what he or she does with respect to service to individuals with disabilities.

Fourth, the training requirement goes both to technical tasks and human relations. Employees obviously need to know how to run equipment the right way. If an employee will be assisting wheelchair users in transferring from a wheelchair to a vehicle seat, the employee needs training in how to do this safely. But every public contact employee also has to understand the necessity of treating individuals with disabilities courteously and respectfully, and the details of what that involves.

One of the best sources of information on how best to train personnel to interact appropriately with individuals with disabilities is the disability community itself. Consequently, the Department urges entities to consult with disability organizations concerning how to train their personnel. Involving these groups in the process of establishing training programs, in addition to providing useful information, should help to establish or improve working relationships among transit providers and disability groups that, necessarily, will be of long duration. We note that several transit providers use persons with disabilities to provide the actual training. Others have reported that role playing is an effective method to instill an appreciation of the particular perspective of one traveling with a disability.

Finally, one of the important points in training concerns differences among individuals with disabilities. All individuals with disabilities, of course, are not alike. The appropriate ways one deals with persons with various kinds of disabilities (e.g., mobility, vision, hearing, or mental impairments) are likely to differ and, while no one expects bus drivers to be trained as disability specialists, recognizing relevant differences and responding to them appropriately is extremely significant. Public entities who contract with private entities to have service provided—above all, complementary paratransit—are responsible for ensuring that contractor personnel receive the appropriate training.

Appendix A to Part 37—Standards for Accessible Transportation Facilities

Sections 504(a) and (b) of the Americans with Disabilities Act (ADA) require the Access Board to adopt accessibility guidelines; sections 204(c) and 306(c) of the ADA require the Department of Transportation to adopt regulatory standards ''consistent with the minimum guidelines and requirements'' issued by the Access Board. In the original 1991 publication of part 37, the Department complied with this requirement by reproducing the Access Board's Americans with Disabilities Act Accessibility Guidelines (ADAAG) in their entirety as Appendix A.

The Access Board revised ADAAG in July 2004. ADAAG, including technical amendments issued in July 2005, is codified in Appendices B and D to 36 CFR part 1191. In order to avoid duplication of material that the Access Board has already included in the CFR, and which is now readily available on the Internet, the Department has adopted ADAAG by cross-reference in part 37, rather than reproducing the lengthy Access Board publication. However, there are certain provisions of ADAAG that the Department is modifying for clarity or to preserve requirements that have been in effect under the existing standards. Under the ADA, the Department, in adopting standards, has the discretion to depart from the language of ADAAG as long as the Department's standards remain consistent with the Access Board's minimum guidelines. In addition, this appendix provides additional guidance concerning some sections of the DOT standards as they apply to transportation facilities.

Section 201.1

The basic scoping requirement requires all areas of newly designed and newly constructed buildings and facilities to be accessible. Former §4.1.1(5) provided a ''structural impracticability'' exception to the requirements for new buildings and facilities. The Access Board deleted this exception to avoid duplication with an existing requirement to the same effect in Department of Justice regulations (see 28 CFR §36.401(c)). For consistency with the approach taken by the Access Board and Department of Justice, and to ensure consistency between facilities subject to Titles II and III of the ADA under

part 37, the Department has added the language of the Department of Justice regulation to §37.41 of this part.

Section 206.3

This section concerns the location of accessible paths. The Department is retaining language from former §10.3.1(1), which provides that ''Elements such as ramps, elevators, or other circulation devices, fare vending or other ticketing areas, and fare collection areas shall be placed to minimize the distance which wheelchair users and other persons who cannot negotiate steps may have to travel compared to the general public.'' This concept, in our view, is implicit in the language of §206.3. However, we believe it is useful to make explicit the concept that, in transportation facilities such as rail stations, important facility elements are placed so as to minimize the distance persons with disabilities must travel to use them. This requirement is intended to affect decisions about where to locate entrances, boarding locations (e.g., where a mini-high platform is used for boarding), and other key elements of a facility.

Section 406.8

To maintain the *status quo* with respect to detectable warnings in pedestrian facilities, the Department is adding a provision (not found in the current version of the new ADAAG) requiring curb ramps to have detectable warnings.

Section 810.2.2

The Department recognizes that there will be some situations in which the full dimensions of a bus boarding and alighting area complying with the §810.2.2 may not be able to be achieved (e.g., there is less than 96 inches of perpendicular space available from the curb or roadway edge, because of buildings or terrain features). The Department is adding language from former §37.9 (c) of this part, which provides that ''Public entities shall ensure the construction of bus boarding and alighting areas comply with 810.2.2, to the extent the construction specifications are within their control.'' Where it is not feasible to fully comply with §810.2.2, the Department expects compliance to the greatest extent feasible.

We note that there may be some instances in which it will be necessary to make operational adjustments where sufficient clearance is not available to permit the deployment of lifts or ramps on vehicles. For example, a bus driver could position the bus at a nearby point—even if not the precise location of the designated stop—so that a passenger needing a lift or ramp to get on or off the bus can do so. To avoid the need for such operational adjustments, it is important to place bus shelters, signs, etc. so that they do not intrude into the required clearances.

Section 810.5.3

This section concerns coordination between rail platforms and rail vehicles. The Department is adding language from the former §10.3.1 (9) (Exception 2), which provides that ''In light rail, commuter rail, and intercity rail systems where it is not operationally or structurally feasible to meet the horizontal gap or vertical difference requirements, mini-high platforms, car-borne or platform-mounted lifts, ramps or bridge plates or similarly manually deployed devices, meeting the requirements of 49 CFR Part 38 shall be permitted.''

In September 2005, the Department issued guidance concerning the relationship of its ADA and 504 rules in the context of rail platform accessibility This guidance emphasized that access to all cars of a train is significant because, if passengers with disabilities are unable to enter all cars from the platform, the passengers will have access only to segregated service. This would be inconsistent with the nondiscrimination mandate of the ADA. It would also, in the case of Federal Transit Administration (FTA) and Federal Railroad Administration (FRA)-assisted projects (including Amtrak), be inconsistent with the requirement of the Department's section 504 regulation (49 CFR §27.7), which requires service in the most integrated setting reasonably achievable. This guidance states the Department's views of the meaning of its existing rules, and the Department will continue to use this guidance in applying the provisions of this rule.

The Department notes that a related section of 49 CFR part 38 has been the source of some misunderstanding. Section 38.71(b)(2) provides that ''Vehicles designed for, and operated on, pedestrian malls, city streets, or other areas where level-entry boarding is not practicable shall provide wayside or car-borne lifts, mini-high platforms, or other means of access in compliance with §38.83 (b) or (c) of this part.'' The Department has received some suggestions that this provision should be interpreted to mean that, if there is any portion of a system in which level-entry boarding is not practicable, then the *entire* system can use some method other than level-entry boarding. Such an interpretation is incorrect. The authority to use alternatives to level-entry boarding pertains only to those portions of a system in which rail vehicles are ''operated on'' an area where level-entry boarding is not practicable.

For example, suppose a light rail system's first three stops are on a pedestrian/transit mall where it is infeasible to provide level-entry boarding. The transit system could use car-borne lifts, mini-high platforms, etc. to

provide access at those three stops. The system's next ten stops are part of a right-of-way in which level-entry boarding is practicable. In such a case, level-entry boarding would have to be provided at those ten stops. There is nothing inappropriate about the same system having different means of boarding in different locations, in such a case.

We also caution against a potential misunderstanding of the sentence in §810.5.3 that provides that ''Low-level platforms shall be 8 inches minimum (205 mm) above top of rail.'' This does not mean that high-level platforms are prohibited or that low-level platforms are the only design consistent with the rules. It simply means that where low-level platforms are otherwise permitted, such platforms must be at least 8 inches above the top of rail, except where vehicles are boarded from the street or a sidewalk.

[56 FR 45621, Sept. 6, 1991, as amended at 61 FR 25416, May 21, 1996; 71 FR 63266, Oct. 30, 2006]

PART 38—AMERICANS WITH DISABILITIES ACT (ADA) ACCESSIBILITY SPECIFICATIONS FOR TRANSPORTATION VEHICLES

Subpart A—General

Sec.
38.1 Purpose.
38.2 Equivalent facilitation.
38.3 Definitions.
38.4 Miscellaneous instructions.

Subpart B—Buses, Vans and Systems

38.21 General.
38.23 Mobility aid accessibility.
38.25 Doors, steps and thresholds.
38.27 Priority seating signs.
38.29 Interior circulation, handrails and stanchions.
38.31 Lighting.
38.33 Fare box.
38.35 Public information system.
38.37 Stop request.
38.39 Destination and route signs.

Subpart C—Rapid Rail Vehicles and Systems

38.51 General.
38.53 Doorways.
38.55 Priority seating signs.
38.57 Interior circulation, handrails and stanchions.
38.59 Floor surfaces.
38.61 Public information system.
38.63 Between-car barriers.

Subpart D—Light Rail Vehicles and Systems

38.71 General.
38.73 Doorways.
38.75 Priority seating signs.
38.77 Interior circulation, handrails and stanchions.
38.79 Floors, steps and thresholds.
38.81 Lighting.
38.83 Mobility aid accessibility.
38.85 Between-car barriers.
38.87 Public information system.

Subpart E—Commuter Rail Cars and Systems

38.91 General.
38.93 Doorways.
38.95 Mobility aid accessibility.
38.97 Interior circulation, handrails and stanchions.
38.99 Floors, steps and thresholds.
38.101 Lighting.
38.103 Public information system.
38.105 Priority seating signs.
38.107 Restrooms.
38.109 Between-car barriers.

Subpart F—Intercity Rail Cars and Systems

38.111 General.
38.113 Doorways.
38.115 Interior circulation, handrails and stanchions.
38.117 Floors, steps and thresholds.
38.119 Lighting.
38.121 Public information system.
38.123 Restrooms.
38.125 Mobility aid accessibility.
38.127 Sleeping compartments.

Subpart G—Over-the-Road Buses and Systems

38.151 General.
38.153 Doors, steps and thresholds.
38.155 Interior circulation, handrails and stanchions.
38.157 Lighting.
38.159 Mobility aid accessibility.
38.161 Moveable aisle armrests.

Subpart H—Other Vehicles and Systems

38.171 General.
38.173 Automated guideway transit vehicles and systems.
38.175 High-speed rail cars, monorails and systems.
38.177 Ferries, excursion boats and other vessels. [Reserved]
38.179 Trams, and similar vehicles, and systems.

FIGURES TO PART 38
APPENDIX TO PART 38—GUIDANCE MATERIAL

AUTHORITY: 42 U.S.C. 12101–12213; 49 U.S.C. 322.

SOURCE: 56 FR 45756, Sept. 6, 1991, unless otherwise noted.

Subpart A—General

§ 38.1 Purpose.

This part provides minimum guidelines and requirements for accessibility standards in part 37 of this title for transportation vehicles required to be accessible by the Americans With Disabilities Act (ADA) of 1990 (42 U.S.C. 1201 *et seq.*).

§ 38.2 Equivalent facilitation.

Departures from particular technical and scoping requirements of these guidelines by use of other designs and technologies are permitted where the alternative designs and technologies used will provide substantially equivalent or greater access to and usability of the vehicle. Departures are to be considered on a case-by-case basis under procedures set forth in § 37.7 of this title.

§ 38.3 Definitions.

See § 37.3 of this title.

§ 38.4 Miscellaneous instructions.

(a) *Dimensional conventions.* Dimensions that are not noted as minimum or maximum are absolute.

(b) *Dimensional tolerances.* All dimensions are subject to conventional engineering tolerances for material properties and field conditions, including normal anticipated wear not exceeding accepted industry-wide standards and practices.

(c) *Notes.* The text of these guidelines does not contain notes or footnotes. Additional information, explanations, and advisory materials are located in the Appendix.

(d) *General terminology.* (1) *Comply with* means meet one or more specification of these guidelines.

(2) *If* or *if * * * then* denotes a specification that applies only when the conditions described are present.

(3) *May* denotes an option or alternative.

(4) *Shall* denotes a mandatory specification or requirement.

(5) *Should* denotes an advisory specification or recommendation.

Subpart B—Buses, Vans and Systems

§ 38.21 General.

(a) New, used or remanufactured buses and vans (except over-the-road buses covered by subpart G of this part), to be considered accessible by regulations in part 37 of this title shall comply with the applicable provisions of this subpart.

(b) If portions of the vehicle are modified in a way that affects or could affect accessibility, each such portion shall comply, to the extent practicable, with the applicable provisions of this subpart. This provision does not require that inaccessible buses be retrofitted with lifts, ramps or other boarding devices.

§ 38.23 Mobility aid accessibility.

(a) *General.* All vehicles covered by this subpart shall provide a level-change mechanism or boarding device (e.g., lift or ramp) complying with paragraph (b) or (c) of this section and sufficient clearances to permit a wheelchair or other mobility aid user to reach a securement location. At least two securement locations and devices, complying with paragraph (d) of this section, shall be provided on vehicles in excess of 22 feet in length; at least one securement location and device, complying with paragraph (d) of this section, shall be provided on vehicles 22 feet in length or less.

(b) *Vehicle lift*—(1) *Design load.* The design load of the lift shall be at least 600 pounds. Working parts, such as cables, pulleys, and shafts, which can be expected to wear, and upon which the lift depends for support of the load, shall have a safety factor of at least six, based on the ultimate strength of the material. Nonworking parts, such as platform, frame, and attachment hardware which would not be expected to wear, shall have a safety factor of at least three, based on the ultimate strength of the material.

(2) *Controls*—(i) *Requirements.* The controls shall be interlocked with the vehicle brakes, transmission, or door, or shall provide other appropriate mechanisms or systems, to ensure that the vehicle cannot be moved when the lift is not stowed and so the lift cannot

be deployed unless the interlocks or systems are engaged. The lift shall deploy to all levels (i.e., ground, curb, and intermediate positions) normally encountered in the operating environment. Where provided, each control for deploying, lowering, raising, and stowing the lift and lowering the roll-off barrier shall be of a momentary contact type requiring continuous manual pressure by the operator and shall not allow improper lift sequencing when the lift platform is occupied. The controls shall allow reversal of the lift operation sequence, such as raising or lowering a platform that is part way down, without allowing an occupied platform to fold or retract into the stowed position.

(ii) *Exception.* Where the lift is designed to deploy with its long dimension parallel to the vehicle axis and which pivots into or out of the vehicle while occupied (i.e., ''rotary lift''), the requirements of this paragraph prohibiting the lift from being stowed while occupied shall not apply if the stowed position is within the passenger compartment and the lift is intended to be stowed while occupied.

(3) *Emergency operation.* The lift shall incorporate an emergency method of deploying, lowering to ground level with a lift occupant, and raising and stowing the empty lift if the power to the lift fails. No emergency method, manual or otherwise, shall be capable of being operated in a manner that could be hazardous to the lift occupant or to the operator when operated according to manufacturer's instructions, and shall not permit the platform to be stowed or folded when occupied, unless the lift is a rotary lift and is intended to be stowed while occupied.

(4) *Power or equipment failure.* Platforms stowed in a vertical position, and deployed platforms when occupied, shall have provisions to prevent their deploying, falling, or folding any faster than 12 inches/second or their dropping of an occupant in the event of a single failure of any load carrying component.

(5) *Platform barriers.* The lift platform shall be equipped with barriers to prevent any of the wheels of a wheelchair or mobility aid from rolling off the platform during its operation. A movable barrier or inherent design feature shall prevent a wheelchair or mobility aid from rolling off the edge closest to the vehicle until the platform is in its fully raised position. Each side of the lift platform which extends beyond the vehicle in its raised position shall have a barrier a minimum 1½ inches high. Such barriers shall not interfere with maneuvering into or out of the aisle. The loading-edge barrier (outer barrier) which functions as a loading ramp when the lift is at ground level, shall be sufficient when raised or closed, or a supplementary system shall be provided, to prevent a power wheelchair or mobility aid from riding over or defeating it. The outer barrier of the lift shall automatically raise or close, or a supplementary system shall automatically engage, and remain raised, closed, or engaged at all times that the platform is more than 3 inches above the roadway or sidewalk and the platform is occupied. Alternatively, a barrier or system may be raised, lowered, opened, closed, engaged, or disengaged by the lift operator, provided an interlock or inherent design feature prevents the lift from rising unless the barrier is raised or closed or the supplementary system is engaged.

(6) *Platform surface.* The platform surface shall be free of any protrusions over ¼ inch high and shall be slip resistant. The platform shall have a minimum clear width of 28½ inches at the platform, a minimum clear width of 30 inches measured from 2 inches above the platform surface to 30 inches above the platform, and a minimum clear length of 48 inches measured from 2 inches above the surface of the platform to 30 inches above the surface of the platform. (See Fig. 1)

(7) *Platform gaps.* Any openings between the platform surface and the raised barriers shall not exceed ⅝ inch in width. When the platform is at vehicle floor height with the inner barrier (if applicable) down or retracted, gaps between the forward lift platform edge and the vehicle floor shall not exceed ½ inch horizontally and ⅝ inch vertically. Platforms on semi-automatic lifts may have a hand hold not exceeding 1½ inches by 4½ inches located between the edge barriers.

(8) *Platform entrance ramp.* The entrance ramp, or loading-edge barrier used as a ramp, shall not exceed a slope of 1:8, measured on level ground, for a maximum rise of 3 inches, and the transition from roadway or sidewalk to ramp may be vertical without edge treatment up to ¼ inch. Thresholds between ¼ inch and ½ inch high shall be beveled with a slope no greater than 1:2.

(9) *Platform deflection.* The lift platform (not including the entrance ramp) shall not deflect more than 3 degrees (exclusive of vehicle roll or pitch) in any direction between its unloaded position and its position when loaded with 600 pounds applied through a 26 inch by 26 inch test pallet at the centroid of the platform.

(10) *Platform movement.* No part of the platform shall move at a rate exceeding 6 inches/second during lowering and lifting an occupant, and shall not exceed 12 inches/second during deploying or stowing. This requirement does not apply to the deployment or stowage cycles of lifts that are manually deployed or stowed. The maximum platform horizontal and vertical acceleration when occupied shall be 0.3g.

(11) *Boarding direction.* The lift shall permit both inboard and outboard facing of wheelchair and mobility aid users.

(12) *Use by standees.* Lifts shall accommodate persons using walkers, crutches, canes or braces or who otherwise have difficulty using steps. The platform may be marked to indicate a preferred standing position.

(13) *Handrails.* Platforms on lifts shall be equipped with handrails on two sides, which move in tandem with the lift, and which shall be graspable and provide support to standees throughout the entire lift operation. Handrails shall have a usable component at least 8 inches long with the lowest portion a minimum 30 inches above the platform and the highest portion a maximum 38 inches above the platform. The handrails shall be capable of withstanding a force of 100 pounds concentrated at any point on the handrail without permanent deformation of the rail or its supporting structure. The handrail shall have a cross-sectional diameter between 1¼ inches and 1½ inches or shall provide an equivalent grasping surface, and have eased edges with corner radii of not less than ⅛ inch. Handrails shall be placed to provide a minimum 1½ inches knuckle clearance from the nearest adjacent surface. Handrails shall not interfere with wheelchair or mobility aid maneuverability when entering or leaving the vehicle.

(c) *Vehicle ramp*—(1) *Design load.* Ramps 30 inches or longer shall support a load of 600 pounds, placed at the centroid of the ramp distributed over an area of 26 inches by 26 inches, with a safety factor of at least 3 based on the ultimate strength of the material. Ramps shorter than 30 inches shall support a load of 300 pounds.

(2) *Ramp surface.* The ramp surface shall be continuous and slip resistant; shall not have protrusions from the surface greater than ¼ inch high; shall have a clear width of 30 inches; and shall accommodate both four-wheel and three-wheel mobility aids.

(3) *Ramp threshold.* The transition from roadway or sidewalk and the transition from vehicle floor to the ramp may be vertical without edge treatment up to ¼ inch. Changes in level between ¼ inch and ½ inch shall be beveled with a slope no greater than 1:2.

(4) *Ramp barriers.* Each side of the ramp shall have barriers at least 2 inches high to prevent mobility aid wheels from slipping off.

(5) *Slope.* Ramps shall have the least slope practicable and shall not exceed 1:4 when deployed to ground level. If the height of the vehicle floor from which the ramp is deployed is 3 inches or less above a 6-inch curb, a maximum slope of 1:4 is permitted; if the height of the vehicle floor from which the ramp is deployed is 6 inches or less, but greater than 3 inches, above a 6-inch curb, a maximum slope of 1:6 is permitted; if the height of the vehicle floor from which the ramp is deployed is 9 inches or less, but greater than 6 inches, above a 6-inch curb, a maximum slope of 1:8 is permitted; if the height of the vehicle floor from which the ramp is deployed is greater than 9 inches above a 6-inch curb, a slope of 1:12 shall be achieved. Folding or telescoping ramps are permitted provided

they meet all structural requirements of this section.

(6) *Attachment.* When in use for boarding or alighting, the ramp shall be firmly attached to the vehicle so that it is not subject to displacement when loading or unloading a heavy power mobility aid and that no gap between vehicle and ramp exceeds ⅝ inch.

(7) *Stowage.* A compartment, securement system, or other appropriate method shall be provided to ensure that stowed ramps, including portable ramps stowed in the passenger area, do not impinge on a passenger's wheelchair or mobility aid or pose any hazard to passengers in the event of a sudden stop or maneuver.

(8) *Handrails.* If provided, handrails shall allow persons with disabilities to grasp them from outside the vehicle while starting to board, and to continue to use them throughout the boarding process, and shall have the top between 30 inches and 38 inches above the ramp surface. The handrails shall be capable of withstanding a force of 100 pounds concentrated at any point on the handrail without permanent deformation of the rail or its supporting structure. The handrail shall have a cross-sectional diameter between 1¼ inches and 1½ inches or shall provide an equivalent grasping surface, and have eased edges with corner radii of not less than ⅛ inch. Handrails shall not interfere with wheelchair or mobility aid maneuverability when entering or leaving the vehicle.

(d) *Securement devices*—(1) *Design load.* Securement systems on vehicles with GVWRs of 30,000 pounds or above, and their attachments to such vehicles, shall restrain a force in the forward longitudinal direction of up to 2,000 pounds per securement leg or clamping mechanism and a minimum of 4,000 pounds for each mobility aid. Securement systems on vehicles with GVWRs of up to 30,000 pounds, and their attachments to such vehicles, shall restrain a force in the forward longitudinal direction of up to 2,500 pounds per securement leg or clamping mechanism and a minimum of 5,000 pounds for each mobility aid.

(2) *Location and size.* The securement system shall be placed as near to the accessible entrance as practicable and shall have a clear floor area of 30 inches by 48 inches. Such space shall adjoin, and may overlap, an access path. Not more than 6 inches of the required clear floor space may be accommodated for footrests under another seat provided there is a minimum of 9 inches from the floor to the lowest part of the seat overhanging the space. Securement areas may have fold-down seats to accommodate other passengers when a wheelchair or mobility aid is not occupying the area, provided the seats, when folded up, do not obstruct the clear floor space required. (See Fig. 2)

(3) *Mobility aids accommodated.* The securement system shall secure common wheelchairs and mobility aids and shall either be automatic or easily attached by a person familiar with the system and mobility aid and having average dexterity.

(4) *Orientation.* In vehicles in excess of 22 feet in length, at least one securement device or system required by paragraph (a) of this section shall secure the wheelchair or mobility aid facing toward the front of the vehicle. Additional securement devices or systems shall secure the wheelchair or mobility aid facing forward, or rearward with a padded barrier, extending from a height of 38 inches from the vehicle floor to a height of 56 inches from the vehicle floor with a width of 18 inches, laterally centered immediately in back of the seated individual. In vehicles 22 feet in length or less, the required securement device may secure the wheelchair or mobility aid either facing toward the front of the vehicle or facing rearward, with a padded barrier as described. Additional securement locations shall be either forward or rearward facing with a padded barrier. Such barriers need not be solid provided equivalent protection is afforded.

(5) *Movement.* When the wheelchair or mobility aid is secured in accordance with manufacturer's instructions, the securement system shall limit the movement of an occupied wheelchair or mobility aid to no more than 2 inches in any direction under normal vehicle operating conditions.

(6) *Stowage.* When not being used for securement, or when the securement

area can be used by standees, the securement system shall not interfere with passenger movement, shall not present any hazardous condition, shall be reasonably protected from vandalism, and shall be readily accessed when needed for use.

(7) *Seat belt and shoulder harness.* For each wheelchair or mobility aid securement device provided, a passenger seat belt and shoulder harness, complying with all applicable provisions of part 571 of this title, shall also be provided for use by wheelchair or mobility aid users. Such seat belts and shoulder harnesses shall not be used in lieu of a device which secures the wheelchair or mobility aid itself.

§ 38.25 Doors, steps and thresholds.

(a) *Slip resistance.* All aisles, steps, floor areas where people walk and floors in securement locations shall have slip-resistant surfaces.

(b) *Contrast.* All step edges, thresholds and the boarding edge of ramps or lift platforms shall have a band of color(s) running the full width of the step or edge which contrasts from the step tread and riser, or lift or ramp surface, either light-on-dark or dark-on-light.

(c) *Door height.* For vehicles in excess of 22 feet in length, the overhead clearance between the top of the door opening and the raised lift platform, or highest point of a ramp, shall be a minimum of 68 inches. For vehicles of 22 feet in length or less, the overhead clearance between the top of the door opening and the raised lift platform, or highest point of a ramp, shall be a minimum of 56 inches.

§ 38.27 Priority seating signs.

(a) Each vehicle shall contain sign(s) which indicate that seats in the front of the vehicle are priority seats for persons with disabilities, and that other passengers should make such seats available to those who wish to use them. At least one set of forward-facing seats shall be so designated.

(b) Each securement location shall have a sign designating it as such.

(c) Characters on signs required by paragraphs (a) and (b) of this section shall have a width-to-height ratio between 3:5 and 1:1 and a stroke width-to-height ratio between 1:5 and 1:10, with a minimum character height (using an upper case ''X'') of 5/8 inch, with ''wide'' spacing (generally, the space between letters shall be 1/16 the height of upper case letters), and shall contrast with the background either light-on-dark or dark-on-light.

§ 38.29 Interior circulation, handrails and stanchions.

(a) Interior handrails and stanchions shall permit sufficient turning and maneuvering space for wheelchairs and other mobility aids to reach a securement location from the lift or ramp.

(b) Handrails and stanchions shall be provided in the entrance to the vehicle in a configuration which allows persons with disabilities to grasp such assists from outside the vehicle while starting to board, and to continue using such assists throughout the boarding and fare collection process. Handrails shall have a cross-sectional diameter between 1¼ inches and 1½ inches or shall provide an equivalent grasping surface, and have eased edges with corner radii of not less than 1/8 inch. Handrails shall be placed to provide a minimum 1½ inches knuckle clearance from the nearest adjacent surface. Where onboard fare collection devices are used on vehicles in excess of 22 feet in length, a horizontal passenger assist shall be located across the front of the vehicle and shall prevent passengers from sustaining injuries on the fare collection device or windshield in the event of a sudden deceleration. Without restricting the vestibule space, the assist shall provide support for a boarding passenger from the front door through the boarding procedure. Passengers shall be able to lean against the assist for security while paying fares.

(c) For vehicles in excess of 22 feet in length, overhead handrail(s) shall be provided which shall be continuous except for a gap at the rear doorway.

(d) Handrails and stanchions shall be sufficient to permit safe boarding, onboard circulation, seating and standing assistance, and alighting by persons with disabilities.

(e) For vehicles in excess of 22 feet in length with front-door lifts or ramps,

vertical stanchions immediately behind the driver shall either terminate at the lower edge of the aisle-facing seats, if applicable, or be ''dog-legged'' so that the floor attachment does not impede or interfere with wheelchair footrests. If the driver seat platform must be passed by a wheelchair or mobility aid user entering the vehicle, the platform, to the maximum extent practicable, shall not extend into the aisle or vestibule beyond the wheel housing.

(f) For vehicles in excess of 22 feet in length, the minimum interior height along the path from the lift to the securement location shall be 68 inches. For vehicles of 22 feet in length or less, the minimum interior height from lift to securement location shall be 56 inches.

§ 38.31 Lighting.

(a) Any stepwell or doorway immediately adjacent to the driver shall have, when the door is open, at least 2 foot-candles of illumination measured on the step tread or lift platform.

(b) Other stepwells and doorways, including doorways in which lifts or ramps are installed, shall have, at all times, at least 2 foot-candles of illumination measured on the step tread, or lift or ramp, when deployed at the vehicle floor level.

(c) The vehicle doorways, including doorways in which lifts or ramps are installed, shall have outside light(s) which, when the door is open, provide at least 1 foot-candle of illumination on the street surface for a distance 3 feet (915 mm) perpendicular to the bottom step tread or lift outer edge. Such light(s) shall be shielded to protect the eyes of entering and exiting passengers.

[56 FR 45756, Sept. 6, 1991, as amended at 63 FR 51697, 51702, Sept. 28, 1998]

§ 38.33 Fare box.

Where provided, the farebox shall be located as far forward as practicable and shall not obstruct traffic in the vestibule, especially wheelchairs or mobility aids.

§ 38.35 Public information system.

(a) Vehicles in excess of 22 feet in length, used in multiple-stop, fixed-route service, shall be equipped with a public address system permitting the driver, or recorded or digitized human speech messages, to announce stops and provide other passenger information within the vehicle.

(b) [Reserved]

§ 38.37 Stop request.

(a) Where passengers may board or alight at multiple stops at their option, vehicles in excess of 22 feet in length shall provide controls adjacent to the securement location for requesting stops and which alerts the driver that a mobility aid user wishes to disembark. Such a system shall provide auditory and visual indications that the request has been made.

(b) Controls required by paragraph (a) of this section shall be mounted no higher than 48 inches and no lower than 15 inches above the floor, shall be operable with one hand and shall not require tight grasping, pinching, or twisting of the wrist. The force required to activate controls shall be no greater than 5 lbf (22.2 N).

§ 38.39 Destination and route signs.

(a) Where destination or route information is displayed on the exterior of a vehicle, each vehicle shall have illuminated signs on the front and boarding side of the vehicle.

(b) Characters on signs required by paragraph (a) of this section shall have a width-to-height ratio between 3:5 and 1:1 and a stroke width-to-height ratio between 1:5 and 1:10, with a minimum character height (using an upper case ''X'') of 1 inch for signs on the boarding side and a minimum character height of 2 inches for front ''headsigns'', with ''wide'' spacing (generally, the space between letters shall be 1/16 the height of upper case letters), and shall contrast with the background, either dark-on-light or light-on-dark.

Subpart C—Rapid Rail Vehicles and Systems

§ 38.51 General.

(a) New, used and remanufactured rapid rail vehicles, to be considered accessible by regulations in part 37 of this title, shall comply with this subpart.

(b) If portions of the vehicle are modified in a way that affects or could affect accessibility, each such portion shall comply, to the extent practicable, with the applicable provisions of this subpart. This provision does not require that inaccessible vehicles be retrofitted with lifts, ramps or other boarding devices.

(c) Existing vehicles which are retrofitted to comply with the ''one-car-per-train rule'' of § 37.93 of this title shall comply with §§ 38.55, 38.57(b), 38.59 of this part and shall have, in new and key stations, at least one door complying with §§ 38.53 (a)(1), (b) and (d) of this part. Removal of seats is not required. Vehicles previously designed and manufactured in accordance with the accessibility requirements of part 609 of this title or the Secretary of Transportation regulations implementing section 504 of the Rehabilitation Act of 1973 that were in effect before October 7, 1991, and which can be entered and used from stations in which they are to be operated, may be used to satisfy the requirements of § 37.93 of this title.

§ 38.53 Doorways.

(a) *Clear width.* (1) Passenger doorways on vehicle sides shall have clear openings at least 32 inches wide when open.

(2) If doorways connecting adjoining cars in a multi-car train are provided, and if such doorway is connected by an aisle with a minimum clear width of 30 inches to one or more spaces where wheelchair or mobility aid users can be accommodated, then such doorway shall have a minimum clear opening of 30 inches to permit wheelchair and mobility aid users to be evacuated to an adjoining vehicle in an emergency.

(b) *Signage.* The International Symbol of Accessibility shall be displayed on the exterior of accessible vehicles operating on an accessible rapid rail system unless all vehicles are accessible and are not marked by the access symbol. (See Fig. 6.)

(c) *Signals.* Auditory and visual warning signals shall be provided to alert passengers of closing doors.

(d) *Coordination with boarding platform*—(1) *Requirements.* Where new vehicles will operate in new stations, the design of vehicles shall be coordinated with the boarding platform design such that the horizontal gap between each vehicle door at rest and the platform shall be no greater than 3 inches and the height of the vehicle floor shall be within plus or minus ⅝ inch of the platform height under all normal passenger load conditions. Vertical alignment may be accomplished by vehicle air suspension or other suitable means of meeting the requirement.

(2) *Exception.* New vehicles operating in existing stations may have a floor height within plus or minus 1½ inches of the platform height. At key stations, the horizontal gap between at least one door of each such vehicle and the platform shall be no greater than 3 inches.

(3) *Exception.* Retrofitted vehicles shall be coordinated with the platform in new and key stations such that the horizontal gap shall be no greater than 4 inches and the height of the vehicle floor, under 50% passenger load, shall be within plus or minus 2 inches of the platform height.

§ 38.55 Priority seating signs.

(a) Each vehicle shall contain sign(s) which indicate that certain seats are priority seats for persons with disabilities, and that other passengers should make such seats available to those who wish to use them.

(b) Characters on signs required by paragraph (a) of this section shall have a width-to-height ratio between 3:5 and 1:1 and a stroke width-to-height ratio between 1:5 and 1:10, with a minimum character height (using an upper case ''X'') of ⅝ inch, with ''wide'' spacing (generally, the space between letters shall be 1/16 the height of upper case letters), and shall contrast with the background, either light-on-dark or dark-on-light.

§ 38.57 Interior circulation, handrails and stanchions.

(a) Handrails and stanchions shall be provided to assist safe boarding, onboard circulation, seating and standing assistance, and alighting by persons with disabilities.

(b) Handrails, stanchions, and seats shall allow a route at least 32 inches wide so that at least two wheelchair or

mobility aid users can enter the vehicle and position the wheelchairs or mobility aids in areas, each having a minimum clear space of 48 inches by 30 inches, which do not unduly restrict movement of other passengers. Space to accommodate wheelchairs and mobility aids may be provided within the normal area used by standees and designation of specific spaces is not required. Particular attention shall be given to ensuring maximum maneuverability immediately inside doors. Ample vertical stanchions from ceiling to seat-back rails shall be provided. Vertical stanchions from ceiling to floor shall not interfere with wheelchair or mobility aid user circulation and shall be kept to a minimum in the vicinity of doors.

(c) The diameter or width of the gripping surface of handrails and stanchions shall be 1¼ inches to 1½ inches or provide an equivalent gripping surface and shall provide a minimum 1½ inches knuckle clearance from the nearest adjacent surface.

§ 38.59 Floor surfaces.

Floor surfaces on aisles, places for standees, and areas where wheelchair and mobility aid users are to be accommodated shall be slip-resistant.

§ 38.61 Public information system.

(a)(1) *Requirements.* Each vehicle shall be equipped with a public address system permitting transportation system personnel, or recorded or digitized human speech messages, to announce stations and provide other passenger information. Alternative systems or devices which provide equivalent access are also permitted. Each vehicle operating in stations having more than one line or route shall have an external public address system to permit transportation system personnel, or recorded or digitized human speech messages, to announce train, route, or line identification information.

(2) *Exception.* Where station announcement systems provide information on arriving trains, an external train speaker is not required.

(b) [Reserved]

§ 38.63 Between-car barriers.

(a) *Requirement.* Suitable devices or systems shall be provided to prevent, deter or warn individuals from inadvertently stepping off the platform between cars. Acceptable solutions include, but are not limited to, pantograph gates, chains, motion detectors or similar devices.

(b) *Exception.* Between-car barriers are not required where platform screens are provided which close off the platform edge and open only when trains are correctly aligned with the doors.

Subpart D—Light Rail Vehicles and Systems

§ 38.71 General.

(a) New, used and remanufactured light rail vehicles, to be considered accessible by regulations in part 37 of this title shall comply with this subpart.

(b)(1) Vehicles intended to be operated solely in light rail systems confined entirely to a dedicated right-of-way, and for which all stations or stops are designed and constructed for revenue service after the effective date of standards for design and construction in §§ 37.21 and 37.23 of this title shall provide level boarding and shall comply with §§ 38.73(d)(1) and 38.85 of this part.

(2) Vehicles designed for, and operated on, pedestrian malls, city streets, or other areas where level boarding is not practicable shall provide wayside or car-borne lifts, mini-high platforms, or other means of access in compliance with § 38.83 (b) or (c) of this part.

(c) If portions of the vehicle are modified in a way that affects or could affect accessibility, each such portion shall comply, to the extent practicable, with the applicable provisions of this subpart. This provision does not require that inaccessible vehicles be retrofitted with lifts, ramps or other boarding devices.

(d) Existing vehicles retrofitted to comply with the ''one-car-per-train rule'' at § 37.93 of this title shall comply with § 38.75, § 38.77(c), § 38.79(a) and § 38.83(a) of this part and shall have, in new and key stations, at least one door

which complies with §§ 38.73 (a)(1), (b) and (d) of this part. Vehicles previously designed and manufactured in accordance with the accessibility requirements of part 609 of this title or the Secretary of Transportation regulations implementing section 504 of the Rehabilitation Act of 1973 that were in effect before October 7, 1991, and which can be entered and used from stations in which they are to be operated, may be used to satisfy the requirements of § 37.93 of this title.

§ 38.73 Doorways.

(a) *Clear width*—(1) All passenger doorways on vehicle sides shall have minimum clear openings of 32 inches when open.

(2) If doorways connecting adjoining cars in a multi-car train are provided, and if such doorway is connected by an aisle with a minimum clear width of 30 inches to one or more spaces where wheelchair or mobility aid users can be accommodated, then such doorway shall have a minimum clear opening of 30 inches to permit wheelchair and mobility aid users to be evacuated to an adjoining vehicle in an emergency.

(b) *Signage.* The International Symbol of Accessibility shall be displayed on the exterior of each vehicle operating on an accessible light rail system unless all vehicles are accessible and are not marked by the access symbol (see fig. 6).

(c) *Signals.* Auditory and visual warning signals shall be provided to alert passengers of closing doors.

(d) *Coordination with boarding platform*—(1) *Requirements.* The design of level-entry vehicles shall be coordinated with the boarding platform or mini-high platform design so that the horizontal gap between a vehicle at rest and the platform shall be no greater than 3 inches and the height of the vehicle floor shall be within plus or minus ⅝ inch of the platform height. Vertical alignment may be accomplished by vehicle air suspension, automatic ramps or lifts, or any combination.

(2) *Exception.* New vehicles operating in existing stations may have a floor height within plus or minus 1½ inches of the platform height. At key stations, the horizontal gap between at least one door of each such vehicle and the platform shall be no greater than 3 inches.

(3) *Exception.* Retrofitted vehicles shall be coordinated with the platform in new and key stations such that the horizontal gap shall be no greater than 4 inches and the height of the vehicle floor, under 50% passenger load, shall be within plus or minus 2 inches of the platform height.

(4) *Exception.* Where it is not operationally or structurally practicable to meet the horizontal or vertical requirements of paragraphs (d) (1), (2) or (3) of this section, platform or vehicle devices complying with § 38.83(b) or platform or vehicle mounted ramps or bridge plates complying with § 38.83(c) shall be provided.

§ 38.75 Priority seating signs.

(a) Each vehicle shall contain sign(s) which indicate that certain seats are priority seats for persons with disabilities, and that other passengers should make such seats available to those who wish to use them.

(b) Where designated wheelchair or mobility aid seating locations are provided, signs shall indicate the location and advise other passengers of the need to permit wheelchair and mobility aid users to occupy them.

(c) Characters on signs required by paragraphs (a) or (b) of this section shall have a width-to-height ratio between 3:5 and 1:1 and a stroke width-to-height ratio between 1:5 and 1:10, with a minimum character height (using an upper case ''X'') of ⅝ inch, with ''wide'' spacing (generally, the space between letters shall be 1/16 the height of upper case letters), and shall contrast with the background, either light-on-dark or dark-on-light.

§ 38.77 Interior circulation, handrails and stanchions.

(a) Handrails and stanchions shall be sufficient to permit safe boarding, onboard circulation, seating and standing assistance, and alighting by persons with disabilities.

(b) At entrances equipped with steps, handrails and stanchions shall be provided in the entrance to the vehicle in

a configuration which allows passengers to grasp such assists from outside the vehicle while starting to board, and to continue using such handrails or stanchions throughout the boarding process. Handrails shall have a cross-sectional diameter between 1¼ inches and 1½ inches or shall provide an equivalent grasping surface, and have eased edges with corner radii of not less than ⅛ inch. Handrails shall be placed to provide a minimum 1½ inches knuckle clearance from the nearest adjacent surface. Where on-board fare collection devices are used, a horizontal passenger assist shall be located between boarding passengers and the fare collection device and shall prevent passengers from sustaining injuries on the fare collection device or windshield in the event of a sudden deceleration. Without restricting the vestibule space, the assist shall provide support for a boarding passenger from the door through the boarding procedure. Passengers shall be able to lean against the assist for security while paying fares.

(c) At all doors on level-entry vehicles, and at each entrance accessible by lift, ramp, bridge plate or other suitable means, handrails, stanchions, passenger seats, vehicle driver seat platforms, and fare boxes, if applicable, shall be located so as to allow a route at least 32 inches wide so that at least two wheelchair or mobility aid users can enter the vehicle and position the wheelchairs or mobility aids in areas, each having a minimum clear space of 48 inches by 30 inches, which do not unduly restrict movement of other passengers. Space to accommodate wheelchairs and mobility aids may be provided within the normal area used by standees and designation of specific spaces is not required. Particular attention shall be given to ensuring maximum maneuverability immediately inside doors. Ample vertical stanchions from ceiling to seat-back rails shall be provided. Vertical stanchions from ceiling to floor shall not interfere with wheelchair or mobility aid circulation and shall be kept to a minimum in the vicinity of accessible doors.

§ 38.79 Floors, steps and thresholds.

(a) Floor surfaces on aisles, step treads, places for standees, and areas where wheelchair and mobility aid users are to be accommodated shall be slip-resistant.

(b) All thresholds and step edges shall have a band of color(s) running the full width of the step or threshold which contrasts from the step tread and riser or adjacent floor, either light-on-dark or dark-on-light.

§ 38.81 Lighting.

(a) Any stepwell or doorway with a lift, ramp or bridge plate immediately adjacent to the driver shall have, when the door is open, at least 2 foot-candles of illumination measured on the step tread or lift platform.

(b) Other stepwells, and doorways with lifts, ramps or bridge plates, shall have, at all times, at least 2 foot-candles of illumination measured on the step tread or lift or ramp, when deployed at the vehicle floor level.

(c) The doorways of vehicles not operating at lighted station platforms shall have outside lights which provide at least 1 foot-candle of illumination on the station platform or street surface for a distance of 3 feet perpendicular to all points on the bottom step tread. Such lights shall be located below window level and shielded to protect the eyes of entering and exiting passengers.

§ 38.83 Mobility aid accessibility.

(a)(1) *General.* All new light rail vehicles, other than level entry vehicles, covered by this subpart shall provide a level-change mechanism or boarding device (e.g., lift, ramp or bridge plate) complying with either paragraph (b) or (c) of this section and sufficient clearances to permit at least two wheelchair or mobility aid users to reach areas, each with a minimum clear floor space of 48 inches by 30 inches, which do not unduly restrict passenger flow. Space to accommodate wheelchairs and mobility aids may be provided within the normal area used by standees and designation of specific spaces is not required.

(2) *Exception.* If lifts, ramps or bridge plates meeting the requirements of this

section are provided on station platforms or other stops required to be accessible, or mini-high platforms complying with §38.73(d) of this part are provided, the vehicle is not required to be equipped with a car-borne device. Where each new vehicle is compatible with a single platform-mounted access system or device, additional systems or devices are not required for each vehicle provided that the single device could be used to provide access to each new vehicle if passengers using wheelchairs or mobility aids could not be accommodated on a single vehicle.

(b) *Vehicle lift*—(1) *Design load.* The design load of the lift shall be at least 600 pounds. Working parts, such as cables, pulleys, and shafts, which can be expected to wear, and upon which the lift depends for support of the load, shall have a safety factor of at least six, based on the ultimate strength of the material. Nonworking parts, such as platform, frame, and attachment hardware which would not be expected to wear, shall have a safety factor of at least three, based on the ultimate strength of the material.

(2) *Controls*—(i) *Requirements.* The controls shall be interlocked with the vehicle brakes, propulsion system, or door, or shall provide other appropriate mechanisms or systems, to ensure that the vehicle cannot be moved when the lift is not stowed and so the lift cannot be deployed unless the interlocks or systems are engaged. The lift shall deploy to all levels (i.e., ground, curb, and intermediate positions) normally encountered in the operating environment. Where provided, each control for deploying, lowering, raising, and stowing the lift and lowering the roll-off barrier shall be of a momentary contact type requiring continuous manual pressure by the operator and shall not allow improper lift sequencing when the lift platform is occupied. The controls shall allow reversal of the lift operation sequence, such as raising or lowering a platform that is part way down, without allowing an occupied platform to fold or retract into the stowed position.

(ii) *Exception.* Where physical or safety constraints prevent the deployment at some stops of a lift having its long dimension perpendicular to the vehicle axis, the transportation entity may specify a lift which is designed to deploy with its long dimension parallel to the vehicle axis and which pivots into or out of the vehicle while occupied (i.e., ''rotary lift''). The requirements of paragraph (b)(2)(i) of this section prohibiting the lift from being stowed while occupied shall not apply to a lift design of this type if the stowed position is within the passenger compartment and the lift is intended to be stowed while occupied.

(iii) *Exception.* The brake or propulsion system interlocks requirement does not apply to a station platform mounted lift provided that a mechanical, electrical or other system operates to ensure that vehicles do not move when the lift is in use.

(3) *Emergency operation.* The lift shall incorporate an emergency method of deploying, lowering to ground level with a lift occupant, and raising and stowing the empty lift if the power to the lift fails. No emergency method, manual or otherwise, shall be capable of being operated in a manner that could be hazardous to the lift occupant or to the operator when operated according to manufacturer's instructions, and shall not permit the platform to be stowed or folded when occupied, unless the lift is a rotary lift intended to be stowed while occupied.

(4) *Power or equipment failure.* Lift platforms stowed in a vertical position, and deployed platforms when occupied, shall have provisions to prevent their deploying, falling, or folding any faster than 12 inches/second or their dropping of an occupant in the event of a single failure of any load carrying component.

(5) *Platform barriers.* The lift platform shall be equipped with barriers to prevent any of the wheels of a wheelchair or mobility aid from rolling off the lift during its operation. A movable barrier or inherent design feature shall prevent a wheelchair or mobility aid from rolling off the edge closest to the vehicle until the lift is in its fully raised position. Each side of the lift platform which extends beyond the vehicle in its raised position shall have a barrier a minimum 1½ inches high. Such barriers shall not interfere with maneuvering into or out of the aisle. The

loading-edge barrier (outer barrier) which functions as a loading ramp when the lift is at ground level, shall be sufficient when raised or closed, or a supplementary system shall be provided, to prevent a power wheelchair or mobility aid from riding over or defeating it. The outer barrier on the outboard of the lift shall automatically rise or close, or a supplementary system shall automatically engage, and remain raised, closed, or engaged at all times that the lift is more than 3 inches above the station platform or roadway and the lift is occupied. Alternatively, a barrier or system may be raised, lowered, opened, closed, engaged or disengaged by the lift operator provided an interlock or inherent design feature prevents the lift from rising unless the barrier is raised or closed or the supplementary system is engaged.

(6) *Platform surface.* The lift platform surface shall be free of any protrusions over ¼ inch high and shall be slip resistant. The lift platform shall have a minimum clear width of 28½ inches at the platform, a minimum clear width of 30 inches measured from 2 inches above the lift platform surface to 30 inches above the surface, and a minimum clear length of 48 inches measured from 2 inches above the surface of the platform to 30 inches above the surface. (See Fig. 1)

(7) *Platform gaps.* Any openings between the lift platform surface and the raised barriers shall not exceed ⅝ inch wide. When the lift is at vehicle floor height with the inner barrier (if applicable) down or retracted, gaps between the forward lift platform edge and vehicle floor shall not exceed ½ inch horizontally and ⅝ inch vertically. Platforms on semi-automatic lifts may have a hand hold not exceeding 1½ inches by 4½ inches located between the edge barriers.

(8) *Platform entrance ramp.* The entrance ramp, or loading-edge barrier used as a ramp, shall not exceed a slope of 1:8 measured on level ground, for a maximum rise of 3 inches, and the transition from the station platform or roadway to ramp may be vertical without edge treatment up to ¼ inch. Thresholds between ¼ inch and ½ inch high shall be beveled with a slope no greater than 1:2.

(9) *Platform deflection.* The lift platform (not including the entrance ramp) shall not deflect more than 3 degrees (exclusive of vehicle roll) in any direction between its unloaded position and its position when loaded with 600 pounds applied through a 26 inch by 26 inch test pallet at the centroid of the lift platform.

(10) *Platform movement.* No part of the platform shall move at a rate exceeding 6 inches/second during lowering and lifting an occupant, and shall not exceed 12 inches/second during deploying or stowing. This requirement does not apply to the deployment or stowage cycles of lifts that are manually deployed or stowed. The maximum platform horizontal and vertical acceleration when occupied shall be 0.3g.

(11) *Boarding direction.* The lift shall permit both inboard and outboard facing of wheelchairs and mobility aids.

(12) *Use by standees.* Lifts shall accommodate persons using walkers, crutches, canes or braces or who otherwise have difficulty using steps. The lift may be marked to indicate a preferred standing position.

(13) *Handrails.* Platforms on lifts shall be equipped with handrails, on two sides, which move in tandem with the lift which shall be graspable and provide support to standees throughout the entire lift operation. Handrails shall have a usable component at least 8 inches long with the lowest portion a minimum 30 inches above the platform and the highest portion a maximum 38 inches above the platform. The handrails shall be capable of withstanding a force of 100 pounds concentrated at any point on the handrail without permanent deformation of the rail or its supporting structure. Handrails shall have a cross-sectional diameter between 1¼ inches and 1½ inches or shall provide an equivalent grasping surface, and have eased edges with corner radii of not less than ⅛ inch. Handrails shall be placed to provide a minimum 1½ inches knuckle clearance from the nearest adjacent surface. Handrails shall not interfere with wheelchair or mobility aid maneuverability when entering or leaving the vehicle.

(c) *Vehicle ramp or bridge plate*—(1) *Design load*. Ramps or bridge plates 30 inches or longer shall support a load of 600 pounds, placed at the centroid of the ramp or bridge plate distributed over an area of 26 inches, with a safety factor of at least 3 based on the ultimate strength of the material. Ramps or bridge plates shorter than 30 inches shall support a load of 300 pounds.

(2) *Ramp surface*. The ramp or bridge plate surface shall be continuous and slip resistant, shall not have protrusions from the surface greater then ¼ inch, shall have a clear width of 30 inches, and shall accommodate both four-wheel and three-wheel mobility aids.

(3) *Ramp threshold*. The transition from roadway or station platform and the transition from vehicle floor to the ramp or bridge plate may be vertical without edge treatment up to ¼ inch. Changes in level between ¼ inch and ½ inch shall be beveled with a slope no greater than 1:2.

(4) *Ramp barriers*. Each side of the ramp or bridge plate shall have barriers at least 2 inches high to prevent mobility aid wheels from slipping off.

(5) *Slope*. Ramps or bridge plates shall have the least slope practicable. If the height of the vehicle floor, under 50% passenger load, from which the ramp is deployed is 3 inches or less above the station platform a maximum slope of 1:4 is permitted; if the height of the vehicle floor, under 50% passenger load, from which the ramp is deployed is 6 inches or less, but more than 3 inches, above the station platform a maximum slope of 1:6 is permitted; if the height of the vehicle floor, under 50% passenger load, from which the ramp is deployed is 9 inches or less, but more than 6 inches, above the station platform a maximum slope of 1:8 is permitted; if the height of the vehicle floor, under 50% passenger load, from which the ramp is deployed is greater than 9 inches above the station platform a slope of 1:12 shall be achieved. Folding or telescoping ramps are permitted provided they meet all structural requirements of this section.

(6) *Attachment*—(i) *Requirement*. When in use for boarding or alighting, the ramp or bridge plate shall be attached to the vehicle, or otherwise prevented from moving such that it is not subject to displacement when loading or unloading a heavy power mobility aid and that any gaps between vehicle and ramp or bridge plate, and station platform and ramp or bridge plate, shall not exceed ⅝ inch.

(ii) *Exception*. Ramps or bridge plates which are attached to, and deployed from, station platforms are permitted in lieu of vehicle devices provided they meet the displacement requirements of paragraph (c)(6)(i) of this section.

(7) *Stowage*. A compartment, securement system, or other appropriate method shall be provided to ensure that stowed ramps or bridge plates, including portable ramps or bridges plates stowed in the passenger area, do not impinge on a passenger's wheelchair or mobility aid or pose any hazard to passengers in the event of a sudden stop.

(8) *Handrails*. If provided, handrails shall allow persons with disabilities to grasp them from outside the vehicle while starting to board, and to continue to use them throughout the boarding process, and shall have the top between 30 inches and 38 inches above the ramp surface. The handrails shall be capable of withstanding a force of 100 pounds concentrated at any point on the handrail without permanent deformation of the rail or its supporting structure. The handrail shall have a cross- sectional diameter between 1¼ inches and 1½ inches or shall provide an equivalent grasping surface, and have ''eased'' edges with corner radii of not less than ⅛ inch. Handrails shall not interfere with wheelchair or mobility aid maneuverability when entering or leaving the vehicle.

§ 38.85 Between-car barriers.

Where vehicles operate in a high-platform, level-boarding mode, devices or systems shall be provided to prevent, deter or warn individuals from inadvertently stepping off the platform between cars. Appropriate devices include, but are not limited to, pantograph gates, chains, motion detectors or other suitable devices.

§ 38.87 Public information system.

(a) Each vehicle shall be equipped with an interior public address system

permitting transportation system personnel, or recorded or digitized human speech messages, to announce stations and provide other passenger information. Alternative systems or devices which provide equivalent access are also permitted.

(b) [Reserved]

Subpart E—Commuter Rail Cars and Systems

§ 38.91 General.

(a) New, used and remanufactured commuter rail cars, to be considered accessible by regulations in part 37 of this title, shall comply with this subpart.

(b) If portions of the car are modified in such a way that it affects or could affect accessibility, each such portion shall comply, to the extent practicable, with the applicable provisions of this subpart. This provision does not require that inaccessible cars be retrofitted with lifts, ramps or other boarding devices.

(c)(1) Commuter rail cars shall comply with §§ 38.93(d) and 38.109 of this part for level boarding wherever structurally and operationally practicable.

(2) Where level boarding is not structurally or operationally practicable, commuter rail cars shall comply § 38.95 of this part.

(d) Existing vehicles retrofitted to comply with the ''one-car-per-train rule'' at § 37.93 of this title shall comply with §§ 38.93(e), 38.95(a) and 38.107 of this part and shall have, in new and key stations at least one door on each side from which passengers board which complies with § 38.93(d) of this part. Vehicles previously designed and manufactured in accordance with the program accessibility requirements of section 504 of the Rehabilitation Act of 1973, or implementing regulations of the Secretary of Transportation that were in effect before October 7, 1991; and which can be entered and used from stations in which they are to be operated, may be used to satisfy the requirements of § 37.93 of this title.

§ 38.93 Doorways.

(a) *Clear width.* (1) At least one door on each side of the car from which passengers board opening onto station platforms and at least one adjacent doorway into the passenger coach compartment, if provided, shall have a minimum clear opening of 32 inches.

(2) If doorways connecting adjoining cars in a multi-car train are provided, and if such doorway is connected by an aisle with a minimum clear width of 30 inches to one or more spaces where wheelchair or mobility aid users can be accommodated, then such doorway shall have, to the maximum extent practicable in accordance with the regulations issued under the Federal Railroad Safety Act of 1970 (49 CFR parts 229 and 231), a clear opening of 30 inches.

(b) *Passageways.* A route at least 32 inches wide shall be provided from doors required to be accessible by paragraph (a)(1) of this section to seating locations complying with § 38.95(d) of this part. In cars where such doorways require passage through a vestibule, such vestibule shall have a minimum width of 42 inches. (See Fig. 3.)

(c) *Signals.* If doors to the platform close automatically or from a remote location, auditory and visual warning signals shall be provided to alert passengers or closing doors.

(d) *Coordination with boarding platform*—(1) *Requirements.* Cars operating in stations with high platforms, or mini-high platforms, shall be coordinated with the boarding platform design such that the horizontal gap between a car at rest and the platform shall be no greater than 3 inches and the height of the car floor shall be within plus or minus ⅝ inch of the platform height. Vertical alignment may be accomplished by car air suspension, platform lifts or other devices, or any combination.

(2) *Exception.* New vehicles operating in existing stations may have a floor height within plus or minus 1½ inches of the platform height. At key stations, the horizontal gap between at least one accessible door of each such vehicle and the platform shall be no greater than 3 inches.

(3) *Exception.* Where platform setbacks do not allow the horizontal gap or vertical alignment specified in paragraph (d)(1) or (d)(2) of this section, car, platform or portable lifts complying with § 38.95(b) of this part, or car

or platform ramps or bridge plates, complying with §38.95(c) of this part, shall be provided.

(4) *Exception.* Retrofitted vehicles shall be coordinated with the platform in new and key stations such that the horizontal gap shall be no greater than 4 inches and the height of the vehicle floor, under 50% passenger load, shall be within plus or minus 2 inches of the platform height.

(e) *Signage.* The International Symbol of Accessibility shall be displaced on the exterior of all doors complying with this section unless all cars are accessible and are not marked by the access symbol (see Fig. 6). Appropriate signage shall also indicate which accessible doors are adjacent to an accessible restroom, if applicable.

§38.95 Mobility aid accessibility.

(a)(1) *General.* All new commuter rail cars, other than level entry cars, covered by this subpart shall provide a level-change mechanism or boarding device (e.g., lift, ramp or bridge plate) complying with either paragraph (b) or (c) of this section; sufficient clearances to permit a wheelchair or mobility aid user to reach a seating location; and at least two wheelchair or mobility aid seating locations complying with paragraph (d) of this section.

(2) *Exception.* If portable or platform lifts, ramps or bridge plates meeting the applicable requirements of this section are provided on station platforms or other stops required to be accessible, or mini-high platforms complying with §38.93(d) are provided, the car is not required to be equipped with a car-borne device. Where each new car is compatible with a single platform-mounted access system or device, additional systems or devices are not required for each car provided that the single device could be used to provide access to each new car if passengers using wheelchairs or mobility aids could not be accommodated on a single car.

(b) *Car Lift*—(1) *Design load.* The design load of the lift shall be at least 600 pounds. Working parts, such as cables, pulleys, and shafts, which can be expected to wear, and upon which the lift depends for support of the load, shall have a safety factor of at least six, based on the ultimate strength of the material. Nonworking parts, such as platform, frame, and attachment hardware which would not be expected to wear, shall have a safety factor of at least three, based on the ultimate strength of the material.

(2) *Controls*—(i) *Requirements.* The controls shall be interlocked with the car brakes, propulsion system, or door, or shall provide other appropriate mechanisms or systems, to ensure that the car cannot be moved when the lift is not stowed and so the lift cannot be deployed unless the interlocks or systems are engaged. The lift shall deploy to all platform levels normally encountered in the operating environment. Where provided, each control for deploying, lowering, raising, and stowing the lift and lowering the roll-off barrier shall be of a monetary contact type requiring continuous manual pressure by the operator and shall not allow improper lift sequencing when the lift platform is occupied. The controls shall allow reversal of the lift operation sequence, such as raising or lowering a platform that is part way down, without allowing an occupied platform to fold or retract into the stowed position.

(ii) *Exception.* Where physical or safety constraints prevent the deployment at some stops of a lift having its long dimension perpendicular to the car axis, the transportation entity may specify a lift which is designed to deploy with its long dimension parallel to the car axis and which pivots into or out of the car while occupied (i.e., ''rotary lift''). The requirements of paragraph (b)(2)(i) of this section prohibiting the lift from being stowed while occupied shall not apply to a lift design of this type if the stowed position is within the passenger compartment and the lift is intended to be stowed while occupied.

(iii) *Exception.* The brake or propulsion system interlock requirement does not apply to a platform mounted or portable lift provided that a mechanical, electrical or other system operates to ensure that cars do not move when the lift is in use.

(3) *Emergency operation.* The lift shall incorporate an emergency method of deploying, lowering to ground or platform level with a lift occupant, and

raising and stowing the empty lift if the power to the lift fails. No emergency method, manual or otherwise, shall be capable of being operated in a manner that could be hazardous to the lift occupant or to the operator when operated according to manufacturer's instructions, and shall not permit the platform to be stowed or folded when occupied, unless the lift is a rotary lift intended to be stowed while occupied.

(4) *Power or equipment failure.* Platforms stowed in a vertical position, and deployed platforms when occupied, shall have provisions to prevent their deploying, falling, or folding any faster than 12 inches/second or their dropping of an occupant in the event of a single failure of any load carrying component.

(5) *Platform barriers.* The lift platform shall be equipped with barriers to prevent any of the wheels of a wheelchair or mobility aid from rolling off the lift during its operation. A movable barrier or inherent design feature shall prevent a wheelchair or mobility aid from rolling off the edge closest to the car until the lift is in its fully raised position. Each side of the lift platform which, in its raised position, extends beyond the car shall have a barrier a minimum 1½ inches high. Such barriers shall not interfere with maneuvering into or out of the car. The loading-edge barrier (outer barrier) which functions as a loading ramp when the lift is at ground or station platform level, shall be sufficient when raised or closed, or a supplementary system shall be provided, to prevent a power wheelchair or mobility aid from riding over or defeating it. The outer barrier of the lift shall automatically rise or close, or a supplementary system shall automatically engage, and remain raised, closed, or engaged at all times that the lift platform is more than 3 inches above the station platform and the lift is occupied. Alternatively, a barrier or system may be raised, lowered, opened, closed, engaged or disengaged by the lift operator provided an interlock or inherent design feature prevents the lift from rising unless the barrier is raised or closed or the supplementary system is engaged.

(6) *Platform surface.* The lift platform surface shall be free of any protrusions over ¼ inch high and shall be slip resistant. The lift platform shall have a minimum clear width of 28½ inches at the platform, a minimum clear width of 30 inches measured from 2 inches above the lift platform surface to 30 inches above the surface, and a minimum clear length of 48 inches measured from 2 inches above the surface of the platform to 30 inches above the surface. (See Fig. 1)

(7) *Platform gaps.* Any openings between the lift platform surface and the raised barriers shall not exceed ⅝ inch wide. When the lift is at car floor height with the inner barrier down (if applicable) or retracted, gaps between the forward lift platform edge and car floor shall not exceed ½ inch horizontally and ⅝ inch vertically.

(8) *Platform entrance ramp.* The entrance ramp, or loading-edge barrier used as a ramp, shall not exceed a slope of 1:8, when measured on level ground, for a maximum rise of 3 inches, and the transition from station platform to ramp may be vertical without edge treatment up to ¼ inch. Thresholds between ¼ inch and ½ inch high shall be beveled with a slope no greater than 1:2.

(9) *Platform deflection.* The lift platform (not including the entrance ramp) shall not deflect more than 3 degrees (exclusive of vehicle roll) in any direction between its unloaded position and its position when loaded with 600 pounds applied through a 26 inch by 26 inch test pallet at the centroid of the lift platform.

(10) *Platform movement.* No part of the platform shall move at a rate exceeding 6 inches/second during lowering and lifting an occupant, and shall not exceed 12 inches/second during deploying or stowing. This requirement does not apply to the deployment or stowage cycles of lifts that are manually deployed or stowed. The maximum platform horizontal and vertical acceleration when occupied shall be 0.3g.

(11) *Boarding direction.* The lift shall permit both inboard and outboard facing of wheelchairs and mobility aids.

(12) *Use by standees.* Lifts shall accommodate persons using walkers, crutches, canes or braces or who otherwise have difficulty using steps. The

lift may be marked to indicate a preferred standing position.

(13) *Handrails.* Platforms on lifts shall be equipped with handrails, on two sides, which move in tandem with the lift which shall be graspable and provide support to standees throughout the entire lift operation. Handrails shall have a usable component at least 8 inches long with the lowest portion a minimum 30 inches above the platform and the highest portion a maximum 38 inches above the platform. The handrails shall be capable of withstanding a force of 100 pounds concentrated at any point on the handrail without permanent deformation of the rail or its supporting structure. The handrail shall have a cross-sectional diameter between 1¼ inches and 1½ inches or shall provide an equivalent grasping surface, and have eased edges with corner radii of not less than ⅛ inch. Handrails shall be placed to provide a minimum 1½ inches knuckle clearance from the nearest adjacent surface. Handrails shall not interfere with wheelchair or mobility aid maneuverability when entering or leaving the car.

(c) *Car ramp or bridge plate*—(1) *Design load.* Ramps or bridge plates 30 inches or longer shall support a load of 600 pounds, placed at the centroid of the ramp or bridge plate distributed over an area of 26 inches by 26 inches, with a safety factor of at least 3 based on the ultimate strength of the material. Ramps or bridge plates shorter than 30 inches shall support a load of 300 pounds.

(2) *Ramp surface.* The ramp or bridge plate surface shall be continuous and slip resistant, shall not have protrusions from the surface greater than ¼ inch high, shall have a clear width of 30 inches and shall accommodate both four-wheel and three-wheel mobility aids.

(3) *Ramp threshold.* The transition from station platform to the ramp or bridge plate and the transition from car floor to the ramp or bridge plate may be vertical without edge treatment up to ¼ inch. Changes in level between ¼ inch and ½ inch shall be beveled with a slope no greater than 1:2.

(4) *Ramp barriers.* Each side of the ramp or bridge plate shall have barriers at least 2 inches high to prevent mobility aid wheels from slipping off.

(5) *Slope.* Ramps or bridge plates shall have the least slope practicable. If the height of the vehicle floor, under 50% passenger load, from which the ramp is deployed is 3 inches or less above the station platform a maximum slope of 1:4 is permitted; if the height of the vehicle floor, under 50% passenger load, from which the ramp is deployed is 6 inches or less, but more than 3 inches, above the station platform a maximum slope of 1:6 is permitted; if the height of the vehicle floor, under 50% passenger load, from which the ramp is deployed is 9 inches or less, but more than 6 inches, above the station platform a maximum slope of 1:8 is permitted; if the height of the vehicle floor, under 50% passenger load, from which the ramp is deployed is greater than 9 inches above the station platform a slope of 1:12 shall be achieved. Folding or telescoping ramps are permitted provided they meet all structural requirements of this section.

(6) *Attachment*—(i) *Requirement.* When in use for boarding or alighting, the ramp or bridge plate shall be attached to the vehicle, or otherwise prevented from moving such that it is not subject to displacement when loading or unloading a heavy power mobility aid and that any gaps between vehicle and ramp or bridge plate, and station platform and ramp or bridge plate, shall not exceed ⅝ inch.

(ii) *Exception.* Ramps or bridge plates which are attached to, and deployed from, station platforms are permitted in lieu of car devices provided they meet the displacement requirements of paragraph (c)(6)(i) of this section.

(7) *Stowage.* A compartment, securement system, or other appropriate method shall be provided to ensure that stowed ramps or bridge plates, including portable ramps or bridge plates stowed in the passenger area, do not impinge on a passenger's wheelchair or mobility aid or pose any hazard to passengers in the event of a sudden stop.

(8) *Handrails.* If provided, handrails shall allow persons with disabilities to grasp them from outside the car while starting to board, and to continue to use them throughout the boarding process, and shall have the top between

30 inches and 38 inches above the ramp surface. The handrails shall be capable of withstanding a force of 100 pounds concentrated at any point on the handrail without permanent deformation of the rail or its supporting structure. The handrail shall have a cross-sectional diameter between 1¼ inches and 1½ inches or shall provide an equivalent grasping surface, and have eased edges with corner radii of not less than ⅛ inch. Handrails shall not interfere with wheelchair or mobility aid maneuverability when entering or leaving the car.

(d) *Mobility aid seating location.* Spaces for persons who wish to remain in their wheelchairs or mobility aids shall have a minimum clear floor space 48 inches by 30 inches. Such spaces shall adjoin, and may overlap, an accessible path. Not more than 6 inches of the required clear floor space may be accommodated for footrests under another seat provided there is a minimum of 9 inches from the floor to the lowest part of the seat overhanging the space. Seating spaces may have fold-down or removable seats to accommodate other passengers when a wheelchair or mobility aid user is not occupying the area, provided the seats, when folded up, do not obstruct the clear floor space required. (See Fig. 2.)

§ 38.97 Interior circulation, handrails and stanchions.

(a) Where provided, handrails or stanchions within the passenger compartment shall be placed to permit sufficient turning and maneuvering space for wheelchairs and other mobility aids to reach a seating location, complying with § 38.95(d) of this part, from an accessible entrance. The diameter or width of the gripping surface of interior handrails and stanchions shall be 1¼ inches to 1½ inches or shall provide an equivalent gripping surface. Handrails shall be placed to provide a minimum 1½ inches knuckle clearance from the nearest adjacent surface.

(b) Where provided, handrails or stanchions shall be sufficient to permit safe boarding, on-board circulation, seating and standing assistance, and alighting by persons with disabilities.

(c) At entrances equipped with steps, handrails or stanchions shall be provided in the entrance to the car in a configuration which allows passengers to grasp such assists from outside the car while starting to board, and to continue using such assists throughout the boarding process, to the extent permitted by part 231 of this title.

§ 38.99 Floors, steps and thresholds.

(a) Floor surfaces on aisles, step treads, places for standees, and areas where wheelchair and mobility aid users are to be accommodated shall be slip-resistant.

(b) All thresholds and step edges shall have a band of color(s) running the full width of the step or threshold which contrasts from the step tread and riser or adjacent floor, either light-on-dark or dark-on-light.

§ 38.101 Lighting.

(a) Any stepwell or doorway with a lift, ramp or bridge plate shall have, when the door is open, at least 2 footcandles of illumination measured on the step tread, ramp, bridge plate, or lift platform.

(b) The doorways of cars not operating at lighted station platforms shall have outside lights which, when the door is open, provide at least 1 footcandle of illumination on the station platform surface for a distance of 3 feet perpendicular to all points on the bottom step tread edge. Such lights shall be shielded to protect the eyes of entering and exiting passengers.

§ 38.103 Public information system.

(a) Each car shall be equipped with an interior public address system permitting transportation system personnel, or recorded or digitized human speech messages, to announce stations and provide other passenger information. Alternative systems or devices which provide equivalent access are also permitted.

(b) [Reserved]

§ 38.105 Priority seating signs.

(a) Each car shall contain sign(s) which indicate that certain seats are priority seats for persons with disabilities and that other passengers should make such seats available to those who wish to use them.

(b) Characters on signs required by paragraph (a) shall have a width-to-height ratio between 3:5 and 1:1 and a stroke width-to-height ratio between 1:5 and 1:10, with a minimum character height (using an upper case ''X'') of 5/8 inch, with ''wide'' spacing (generally, the space between letters shall be 1/16 the height of upper case letters), and shall contrast with the background either light-on-dark or dark-on-light.

§ 38.107 Restrooms.

(a) If a restroom is provided for the general public, it shall be designed so as to allow a person using a wheelchair or mobility aid to enter and use such restroom as specified in paragraphs (a)(1) through (5) of this section.

(1) The minimum clear floor area shall be 35 inches by 60 inches. Permanently installed fixtures may overlap this area a maximum of 6 inches, if the lowest portion of the fixture is a minimum of 9 inches above the floor, and may overlap a maximum of 19 inches, if the lowest portion of the fixture is a minimum of 29 inches above the floor, provided such fixtures do not interfere with access to the water closet. Fold-down or retractable seats or shelves may overlap the clear floor space at a lower height provided they can be easily folded up or moved out of the way.

(2) The height of the water closet shall be 17 inches to 19 inches measured to the top of the toilet seat. Seats shall not be sprung to return to a lifted position.

(3) A grab bar at least 24 inches long shall be mounted behind the water closet, and a horizontal grab bar at least 40 inches long shall be mounted on at least one side wall, with one end not more than 12 inches from the back wall, at a height between 33 inches and 36 inches above the floor.

(4) Faucets and flush controls shall be operable with one hand and shall not require tight grasping, pinching, or twisting of the wrist. The force required to activate controls shall be no greater than 5 lbf (22.2 N). Controls for flush valves shall be mounted no more than 44 inches above the floor.

(5) Doorways on the end of the enclosure, opposite the water closet, shall have a minimum clear opening width of 32 inches. Doorways on the side wall shall have a minimum clear opening width of 39 inches. Door latches and hardware shall be operable with one hand and shall not require tight grasping, pinching, or twisting of the wrist.

(b) Restrooms required to be accessible shall be in close proximity to at least one seating location for persons using mobility aids and shall be connected to such a space by an unobstructed path having a minimum width of 32 inches.

§ 38.109 Between-car barriers.

Where vehicles operate in a high-platform, level-boarding mode, and where between-car bellows are not provided, devices or systems shall be provided to prevent, deter or warn individuals from inadvertently stepping off the platform between cars. Appropriate devices include, but are not limited to, pantograph gates, chains, motion detectors or other suitable devices.

Subpart F—Intercity Rail Cars and Systems

§ 38.111 General.

(a) New, used and remanufactured intercity rail cars, to be considered accessible by regulations in part 37 of this title shall comply with this subpart to the extent required for each type of car as specified below.

(1) Single-level rail passenger coaches and food service cars (other than single-level dining cars) shall comply with §§ 38.113 through 38.123 of this part. Compliance with § 38.125 of this part shall be required only to the extent necessary to meet the requirements of paragraph (d) of this section.

(2) Single-level dining and lounge cars shall have at least one connecting doorway complying with § 38.113(a)(2) of this part connected to a car accessible to persons using wheelchairs or mobility aids, and at least one space complying with §§ 38.125(d) (2) and (3) of this part, to provide table service to a person who wishes to remain in his or her wheelchair, and space to fold and store a wheelchair for a person who wishes to transfer to an existing seat.

(3) Bi-level dining cars shall comply with §§ 38.113(a)(2), 38.115(b), 38.117(a), and 38.121 of this part.

(4) Bi-level lounge cars shall have doors on the lower level, on each side of the car from which passengers board, complying with §38.113, a restroom complying with §38.123, and at least one space complying with §38.125(d) (2) and (3) to provide table service to a person who wishes to remain in his or her wheelchair and space to fold and store a wheelchair for a person who wishes to transfer to an existing seat.

(5) Restrooms, complying with §38.123 shall be provided in single-level rail passenger coaches and food services cars adjacent to the accessible seating locations required by paragraph (d) of this section. Accessible restrooms are required in dining and lounge cars only if restrooms are provided for other passengers.

(6) Sleeper cars shall comply with §§38.113 (b) through (d), 38.115 through 38.121, and 38.125, of this part, and have at least one compartment which can be entered and used by a person using a wheelchair or mobility aid and complying with §38.127 of this part.

(b)(1) If physically and operationally practicable, intercity rail cars shall comply with §38.113(d) of this part for level boarding.

(2) Where level boarding is not structurally or operationally practicable, intercity rail cars shall comply with §38.125.

(c) If portions of the car are modified in a way that it affects or could affect accessibility, each such portion shall comply, to the extent practicable, with the applicable provisions of this subpart. This provision does not require that inaccessible cars be retrofitted with lifts, ramps or other boarding devices.

(d) Passenger coaches or food service cars shall have the number of spaces complying with §38.125(d)(2) of this part and the number of spaces complying with §38.125(d)(3) of this part, as required by §37.91 of this title.

(e) Existing cars retrofitted to meet the seating requirements of §37.91 of this title shall comply with §38.113(e), §38.123, §38.125(d) of this part and shall have at least one door on each side from which passengers board complying with §38.113(d) of this part. Existing cars designed and manufactured to be accessible in accordance with the Secretary of Transportation regulations implementing section 504 of the Rehabilitation Act of 1973 that were in effect before October 7, 1991, shall comply with §38.125(a) of this part.

§38.113 Doorways.

(a) *Clear width*. (1) At least one doorway, on each side of the car from which passengers board, of each car required to be accessible by §38.111(a) and where the spaces required by §38.111(d) of this part are located, and at least one adjacent doorway into coach passenger compartments shall have a minimum clear opening width of 32 inches.

(2) Doorways at ends of cars connecting two adjacent cars, to the maximum extent practicable in accordance with regulations issued under the Federal Railroad Safety Act of 1970 (49 CFR parts 229 and 231), shall have a clear opening width of 32 inches to permit wheelchair and mobility aid users to enter into a single-level dining car, if available.

(b) *Passageway*. Doorways required to be accessible by paragraph (a) of this section shall permit access by persons using mobility aids and shall have an unobstructed passageway at least 32 inches wide leading to an accessible sleeping compartment complying with §38.127 of this part or seating locations complying with §38.125(d) of this part. In cars where such doorways require passage through a vestibule, such vestibule shall have a minimum width of 42 inches. (see Fig. 4)

(c) *Signals*. If doors to the platform close automatically or from a remote location, auditory and visual warning signals shall be provided to alert passengers of closing doors.

(d) *Coordination with boarding platforms*—(1) *Requirements*. Cars which provide level-boarding in stations with high platforms shall be coordinated with the boarding platform or mini-high platform design such that the horizontal gap between a car at rest and the platform shall be no greater than 3 inches and the height of the car floor shall be within plus or minus 5/8 inch of the platform height. Vertical alignment may be accomplished by car air suspension, platform lifts or other devices, or any combination.

(2) *Exception.* New cars operating in existing stations may have a floor height within plus or minus 1½ inches of the platform height.

(3) *Exception.* Where platform setbacks do not allow the horizontal gap or vertical alignment specified in paragraph (d) (1) or (2), platform or portable lifts complying with §38.125(b) of this part, or car or platform bridge plates, complying with §38.125(c) of this part, may be provided.

(4) *Exception.* Retrofitted vehicles shall be coordinated with the platform in existing stations such that the horizontal gap shall be no greater than 4 inches and the height of the vehicle floor, under 50% passenger load, shall be within plus or minus 2 inches of the platform height.

(e) *Signage.* The International Symbol of Accessibility shall be displayed on the exterior of all doors complying with this section unless all cars and doors are accessible and are not marked by the access symbol (see fig. 6). Appropriate signage shall also indicate which accessible doors are adjacent to an accessible restroom, if applicable.

[56 FR 45756, Sept. 6, 1991, as amended at 58 FR 63103, Nov. 30, 1993]

§38.115 Interior circulation, handrails and stanchions.

(a) Where provided, handrails or stanchions within the passenger compartment shall be placed to permit sufficient turning and maneuvering space for wheelchairs and other mobility aids to reach a seating location, complying with §38.125(d) of this part, from an accessible entrance. The diameter or width of the gripping surface of interior handrails and stanchions shall be 1¼ inches to 1½ inches or shall provide an equivalent gripping surface. Handrails shall be placed to provide a minimum 1½ inches knuckle clearance from the nearest adjacent surface.

(b) Where provided, handrails and stanchions shall be sufficient to permit safe boarding, on-board circulation, seating and standing assistance, and alighting by persons with disabilities.

(c) At entrances equipped with steps, handrails or stanchions shall be provided in the entrance to the car in a configuration which allows passengers to grasp such assists from outside the car while starting to board, and to continue using such assists throughout the boarding process, to the extent permitted by part 231 of this title.

§38.117 Floors, steps and thresholds.

(a) Floor surfaces on aisles, step treads and areas where wheelchair and mobility aid users are to be accommodated shall be slip-resistant.

(b) All step edges and thresholds shall have a band of color(s) running the full width of the step or threshold which contrasts from the step tread and riser or adjacent floor, either light-on-dark or dark-on-light.

§38.119 Lighting.

(a) Any stepwell, or doorway with a lift, ramp or bridge plate, shall have, when the door is open, at least 2 footcandles of illumination measured on the step tread, ramp, bridge plate or lift platform.

(b) The doorways of cars not operating at lighted station platforms shall have outside lights which, when the door is open, provide at least 1 footcandle of illumination on the station platform surface for a distance of 3 feet perpendicular to all points on the bottom step tread edge. Such lights shall be shielded to protect the eyes of entering and exiting passengers.

§38.121 Public information system.

(a) Each car shall be equipped with a public address system permitting transportation system personnel, or recorded or digitized human speech messages, to announce stations and provide other passenger information. Alternative systems or devices which provide equivalent access are also permitted.

(b) [Reserved]

§38.123 Restrooms.

(a) If a restroom is provided for the general public, and an accessible restroom is required by §38.111 (a) and (e) of this part, it shall be designed so as to allow a person using a wheelchair or mobility aid to enter and use such restroom as specified in paragraphs (a) (1) through (5) of this section.

(1) The minimum clear floor area shall be 35 inches by 60 inches. Permanently installed fixtures may overlap this area a maximum of 6 inches, if the lowest portion of the fixture is a minimum of 9 inches above the floor, and may overlap a maximum of 19 inches, if the lowest portion of the fixture is a minimum of 29 inches above the floor. Fixtures shall not interfere with access to and use of the water closet. Fold-down or retractable seats or shelves may overlap the clear floor space at a lower height provided they can be easily folded up or moved out of the way.

(2) The height of the water closet shall be 17 inches to 19 inches measured to the top of the toilet seat. Seats shall not be sprung to return to a lifted position.

(3) A grab bar at least 24 inches long shall be mounted behind the water closet, and a horizontal grab bar at least 40 inches long shall be mounted on at least one side wall, with one end not more than 12 inches from the back wall, at a height between 33 inches and 36 inches above the floor.

(4) Faucets and flush controls shall be operable with one hand and shall not require tight grasping, pinching, or twisting of the wrist. The force required to activate controls shall be no greater than 5 lbf (22.2 N). Controls for flush valves shall be mounted no more than 44 inches above the floor.

(5) Doorways on the end of the enclosure, opposite the water closet, shall have a minimum clear opening width of 32 inches. Doorways on the side wall shall have a minimum clear opening width of 39 inches. Door latches and hardware shall be operable with one hand and shall not require tight grasping, pinching, or twisting of the wrist.

(b) Restrooms required to be accessible shall be in close proximity to at least one seating location for persons using mobility aids complying with §38.125(d) of this part and shall be connected to such a space by an unobstructed path having a minimum width of 32 inches.

§38.125 Mobility aid accessibility.

(a)(1) *General.* All intercity rail cars, other than level entry cars, required to be accessible by §§38.111 (a) and (e) of this subpart shall provide a level-change mechanism or boarding device (e.g., lift, ramp or bridge plate) complying with either paragraph (b) or (c) of this section and sufficient clearances to permit a wheelchair or other mobility aid user to reach a seating location complying with paragraph (d) of this section.

(2) *Exception.* If portable or platform lifts, ramps or bridge plates meeting the applicable requirements of this section are provided on station platforms or other stops required to be accessible, or mini-high platforms complying with §38.113(d) are provided, the car is not required to be equipped with a carborne device.

(b) *Car Lift*—(1) *Design load.* The design load of the lift shall be at least 600 pounds. Working parts, such as cables, pulleys, and shafts, which can be expected to wear, and upon which the lift depends for support of the load, shall have a safety factor of at least six, based on the ultimate strength of the material. Nonworking parts, such as platform, frame, and attachment hardware which would not be expected to wear, shall have a safety factor of at least three, based on the ultimate strength of the material.

(2) *Controls*—(i) *Requirements.* The controls shall be interlocked with the car brakes, propulsion system, or door, or shall provide other appropriate mechanisms or systems, to ensure that the car cannot be moved when the lift is not stowed and so the lift cannot be deployed unless the interlocks or systems are engaged. The lift shall deploy to all platform levels normally encountered in the operating environment. Where provided, each control for deploying, lowering, raising, and stowing the lift and lowering the roll-off barrier shall be of a monetary contact type requiring continuous manual pressure by the operator and shall not allow improper lift sequencing when the lift platform is occupied. The controls shall allow reversal of the lift operation sequence, such as raising or lowering a platform that is part way down, without allowing an occupied platform to fold or retract into the stowed position.

(ii) *Exception.* Where physical or safety constraints prevent the deployment at some stops of a lift having its long

dimension perpendicular to the car axis, the transportation entity may specify a lift which is designed to deploy with its long dimension parallel to the car axis and which pivots into or out of the car while occupied (i.e., ''rotary lift''). The requirements of paragraph (b)(2)(i) of this section prohibiting the lift from being stowed while occupied shall not apply to a lift design of this type if the stowed position is within the passenger compartment and the lift is intended to be stowed while occupied.

(iii) *Exception.* The brake or propulsion system interlocks requirement does not apply to platform mounted or portable lifts provided that a mechanical, electrical or other system operates to ensure that cars do not move when the lift is in use.

(3) *Emergency operation.* The lift shall incorporate an emergency method of deploying, lowering to ground or station platform level with a lift occupant, and raising and stowing the empty lift if the power to the lift fails. No emergency method, manual or otherwise, shall be capable of being operated in a manner that could be hazardous to the lift occupant or to the operator when operated according to manufacturer's instructions, and shall not permit the platform to be stowed or folded when occupied, unless the lift is a rotary lift and is intended to be stowed while occupied.

(4) *Power or equipment failure.* Platforms stowed in a vertical position, and deployed platforms when occupied, shall have provisions to prevent their deploying, falling, or folding any faster than 12 inches/second or their dropping of an occupant in the event of a single failure of any load carrying component.

(5) *Platform barriers.* The lift platform shall be equipped with barriers to prevent any of the wheels of a wheelchair or mobility aid from rolling off the lift during its operation. A movable barrier or inherent design feature shall prevent a wheelchair or mobility aid from rolling off the edge closest to the car until the lift is in its fully raised position. Each side of the lift platform which, in its raised position, extends beyond the car shall have a barrier a minimum 1½ inches high. Such barriers shall not interfere with maneuvering into or out of the car. The loading-edge barrier (outer barrier) which functions as a loading ramp when the lift is at ground or station platform level, shall be sufficient when raised or closed, or a supplementary system shall be provided, to prevent a power wheelchair or mobility aid from riding over or defeating it. The outer barrier of the lift shall automatically rise or close, or a supplementary system shall automatically engage, and remain raised, closed, or engaged at all times that the lift platform is more than 3 inches above the station platform and the lift is occupied. Alternatively, a barrier or system may be raised, lowered, opened, closed, engaged or disengaged by the lift operator provided an interlock or inherent design feature prevents the lift from rising unless the barrier is raised or closed or the supplementary system is engaged.

(6) *Platform surface.* The lift platform surface shall be free of any protrusions over ¼ inch high and shall be slip resistant. The lift platform shall have a minimum clear width of 28½ inches at the platform, a minimum clear width of 30 inches measured from 2 inches above the lift platform surface to 30 inches above the surface, and a minimum clear length of 48 inches measured from 2 inches above the surface of the platform to 30 inches above the surface. (See Fig. 1.)

(7) *Platform gaps.* Any openings between the lift platform surface and the raised barriers shall not exceed ⅝ inch wide. When the lift is at car floor height with the inner barrier (if applicable) down or retracted, gaps between the forward lift platform edge and car floor shall not exceed ½ inch horizontally and ⅝ inch vertically.

(8) *Platform entrance ramp.* The entrance ramp, or loading-edge barrier used as a ramp, shall not exceed a slope of 1:8, when measured on level ground, for a maximum rise of 3 inches, and the transition from station platform to ramp may be vertical without edge treatment up to ¼ inch. Thresholds between ¼ inch and ½ inch high shall be beveled with a slope no greater than 1:2.

(9) *Platform deflection.* The lift platform (not including the entrance ramp)

shall not deflect more than 3 degrees (exclusive of car roll) in any direction between its unloaded position and its position when loaded with 600 pounds applied through a 26 inch by 26 inch test pallet at the centroid of the lift platform.

(10) *Platform movement.* No part of the platform shall move at a rate exceeding 6 inches/second during lowering and lifting an occupant, and shall not exceed 12 inches/second during deploying or stowing. This requirement does not apply to the deployment or stowage cycles of lifts that are manually deployed or stowed. The maximum platform horizontal and vertical acceleration when occupied shall be 0.3g.

(11) *Boarding direction.* The lift shall permit both inboard and outboard facing of wheelchairs and mobility aids.

(12) *Use by standees.* Lifts shall accommodate persons using walkers, crutches, canes or braces or who otherwise have difficulty using steps. The lift may be marked to indicate a preferred standing position.

(13) *Handrails.* Platforms on lifts shall be equipped with handrails, on two sides, which move in tandem with the lift, and which shall be graspable and provide support to standees throughout the entire lift operation. Handrails shall have a usable component at least 8 inches long with the lowest portion a minimum 30 inches above the platform and the highest portion a maximum 38 inches above the platform. The handrails shall be capable of withstanding a force of 100 pounds concentrated at any point on the handrail without permanent deformation of the rail or its supporting structure. The handrail shall have a cross-sectional diameter between 1¼ inches and 1½ inches or shall provide an equivalent grasping surface, and have eased edges with corner radii of not less than ⅛ inch. Handrails shall be placed to provide a minimum 1½ inches knuckle clearance from the nearest adjacent surface. Handrails shall not interfere with wheelchair or mobility aid maneuverability when entering or leaving the car.

(c) *Car ramp or bridge plate*—(1) *Design load.* Ramps or bridge plates 30 inches or longer shall support a load of 600 pounds, placed at the centroid of the ramp or bridge plate distributed over an area of 26 inches by 26 inches, with a safety factor of at least 3 based on the ultimate strength of the material. Ramps or bridge plates shorter than 30 inches shall support a load of 300 pounds.

(2) *Ramp surface.* The ramp or bridge plate surface shall be continuous and slip resistant, shall not have protrusions from the surface greater than ¼ inch high, shall have a clear width of 30 inches and shall accommodate both four-wheel and three-wheel mobility aids.

(3) *Ramp threshold.* The transition from station platform to the ramp or bridge plate and the transition from car floor to the ramp or bridge plate may be vertical without edge treatment up to ¼ inch. Changes in level between ¼ inch and ½ inch shall be beveled with a slope no greater than 1:2.

(4) *Ramp barriers.* Each side of the ramp or bridge plate shall have barriers at least 2 inches high to prevent mobility aid wheels from slipping off.

(5) *Slope.* Ramps or bridge plates shall have the least slope practicable. If the height of the vehicle floor, under 50% passenger load, from which the ramp is deployed is 3 inches or less above the station platform a maximum slope of 1:4 is permitted; if the height of the vehicle floor, under 50% passenger load, from which the ramp is deployed is 6 inches or less, but more than 3 inches, above the station platform a maximum slope of 1:6 is permitted; if the height of the vehicle floor, under 50% passenger load, from which the ramp is deployed is 9 inches or less, but more than 6 inches, above the station platform a maximum slope of 1:8 is permitted; if the height of the vehicle floor, under 50% passenger load, from which the ramp is deployed is greater than 9 inches above the station platform a slope of 1:12 shall be achieved. Folding or telescoping ramps are permitted provided they meet all structural requirements of this section.

(6) *Attachment*—(i) *Requirement.* When in use for boarding or alighting, the ramp or bridge plate shall be attached to the vehicle, or otherwise prevented from moving such that it is not subject to displacement when loading or unloading a heavy power mobility aid and

that any gaps between vehicle and ramp or bridge plate, and station platform and ramp or bridge plate, shall not exceed ⅝ inch.

(ii) *Exception.* Ramps or bridge plates which are attached to, and deployed from, station platforms are permitted in lieu of car devices provided they meet the displacement requirements of paragraph (c)(6)(i) of this section.

(7) *Stowage.* A compartment, securement system, or other appropriate method shall be provided to ensure that stowed ramps or bridge plates, including portable ramps or bridge plates stowed in the passenger area, do not impinge on a passenger's wheelchair or mobility aid or pose any hazard to passengers in the event of a sudden stop.

(8) *Handrails.* If provided, handrails shall allow persons with disabilities to grasp them from outside the car while starting to board, and to continue to use them throughout the boarding process, and shall have the top between 30 inches and 38 inches above the ramp surface. The handrails shall be capable of withstanding a force of 100 pounds concentrated at any point on the handrail without permanent deformation of the rail or its supporting structure. The handrail shall have a cross-sectional diameter between 1¼ inches and 1½ inches or shall provide an equivalent grasping surface, and have eased edges with corner radii of not less than ⅛ inch. Handrails shall not interfere with wheelchair or mobility aid maneuverability when entering or leaving the car.

(d) *Seating*—(1) *Requirements.* All intercity rail cars required to be accessible by §§ 38.111 (a) and (e) of this subpart shall provide at least one, but not more than two, mobility aid seating location(s) complying with paragraph (d)(2) of this section; and at least one, but not more than two, seating location(s) complying with paragraph (d)(3) of this section which adjoin or overlap an accessible route with a minimum clear width of 32 inches.

(2) *Wheelchair or mobility aid spaces.* Spaces for persons who wish to remain in their wheelchairs or mobility aids shall have a minimum clear floor space 48 inches by 30 inches. Such spaces shall adjoin, and may overlap, an accessible path. Not more than 6 inches of the required clear floor space may be accommodated for footrests under another seat provided there is a minimum of 9 inches from the floor to the lowest part of the seat overhanging the space. Seating spaces may have fold-down or removable seats to accommodate other passengers when a wheelchair or mobility aid user is not occupying the area, provided the seats, when folded up, do not obstruct the clear floor space provided (See Fig. 2).

(3) *Other spaces.* Spaces for individuals who wish to transfer shall include a regular coach seat or dining car booth or table seat and space to fold and store the passenger's wheelchair.

[56 FR 45756, Sept. 6, 1991, as amended at 58 FR 63103, Nov. 30, 1993]

§ 38.127 Sleeping compartments.

(a) Sleeping compartments required to be accessible shall be designed so as to allow a person using a wheelchair or mobility aid to enter, maneuver within and approach and use each element within such compartment. (See Fig. 5.)

(b) Each accessible compartment shall contain a restroom complying with § 38.123(a) which can be entered directly from such compartment.

(c) Controls and operating mechanisms (e.g., heating and air conditioning controls, lighting controls, call buttons, electrical outlets, etc.) shall be mounted no more than 48 inches, and no less than 15 inches, above the floor and shall have a clear floor area directly in front a minimum of 30 inches by 48 inches. Controls and operating mechanisms shall be operable with one hand and shall not require tight grasping, pinching, or twisting of the wrist.

Subpart G—Over-the-Road Buses and Systems

§ 38.151 General.

(a) New, used and remanufactured over-the-road buses, to be considered accessible by regulations in part 37 of this title, shall comply with this subpart.

(b) Over-the-road buses covered by § 37.7 (c) of this title shall comply with § 38.23 and this subpart.

§ 38.153 Doors, steps and thresholds.

(a) Floor surfaces on aisles, step treads and areas where wheelchair and mobility aid users are to be accommodated shall be slip-resistant.

(b) All step edges shall have a band of color(s) running the full width of the step which contrasts from the step tread and riser, either dark-on-light or light-on-dark.

(c)(1) Doors shall have a minimum clear width when open of 30 inches (760 mm), measured from the lowest step to a height of at least 48 inches (1220 mm), from which point they may taper to a minimum width of 18 inches (457 mm). The clear width may be reduced by a maximum of 4 inches (100 mm) by protrusions of hinges or other operating mechanisms.

(2) *Exception.* Where compliance with the door width requirement of paragraph (c)(1) of this section is not feasible, the minimum door width shall be 27 in (685 mm).

(d) The overhead clearance between the top of the lift door opening and the sill shall be the maximum practicable but not less than 65 inches (1651 mm).

[56 FR 45756, Sept. 6, 1991, as amended at 63 FR 51698, 51702, Sept. 28, 1998]

§ 38.155 Interior circulation, handrails and stanchions.

(a) Handrails and stanchions shall be provided in the entrance to the vehicle in a configuration which allows passengers to grasp such assists from outside the vehicle while starting to board, and to continue using such handrails or stanchions throughout the boarding process. Handrails shall have a cross-sectional diameter between 1¼ inches and 1½ inches or shall provide an equivalent grasping surface, and have eased edges with corner radii of not less than ⅛ inch. Handrails shall be placed to provide a minimum 1½ inches knuckle clearance from the nearest adjacent surface. Where on-board fare collection devices are used, a horizontal passenger assist shall be located between boarding passengers and the fare collection device and shall prevent passengers from sustaining injuries on the fare collection device or windshield in the event of a sudden deceleration. Without restricting the vestibule space, the assist shall provide support for a boarding passenger from the door through the boarding procedure. Passengers shall be able to lean against the assist for security while paying fares.

(b) Where provided within passenger compartments, handrails or stanchions shall be sufficient to permit safe on-board circulation, seating and standing assistance, and alighting by persons with disabilities.

§ 38.157 Lighting.

(a) Any stepwell or doorway immediately adjacent to the driver shall have, when the door is open, at least 2 foot-candles of illumination measured on the step tread.

(b) The vehicle doorway shall have outside light(s) which, when the door is open, provide at least 1 foot-candle of illumination on the pathway to the door for a distance of 3 feet (915 mm) to the bottom step tread or lift outer edge. Such light(s) shall be shielded to protect the eyes of entering and exiting passengers.

[56 FR 45756, Sept. 6, 1991, as amended at 63 FR 51698, 51702, Sept. 28, 1998]

§ 38.159 Mobility aid accessibility.

(a)(1) *General.* All vehicles covered by this subpart shall provide a level-change mechanism or boarding device (e.g., lift or ramp) complying with paragraph (b) or (c) of this section and sufficient clearances to permit a wheelchair or other mobility aid user to reach a securement location. At least two securement locations and devices, complying with paragraph (d) of this section, shall be provided.

(2) *Exception.* If portable or station-based lifts, ramps or bridge plates meeting the applicable requirements of this section are provided at stations or other stops required to be accessible under regulations issued by the Department of Transportation, the bus is not required to be equipped with a vehicle-borne device.

(b) *Vehicle lift*—(1) *Design load.* The design load of the lift shall be at least 600 pounds (2665 N). Working parts, such as cables, pulleys, and shafts, which can be expected to wear, and upon which the lift depends for support of the load, shall have a safety factor

of at least six, based on the ultimate strength of the material. Nonworking parts, such as platform, frame and attachment hardware which would not be expected to wear, shall have a safety factor of at least three, based on the ultimate strength of the material.

(2) *Controls*—(i) *Requirements.* The controls shall be interlocked with the vehicle brakes, transmission, or door, or shall provide other appropriate mechanisms or systems, to ensure that the vehicle cannot be moved when the lift is not stowed and so the lift cannot be deployed unless the interlocks or systems are engaged. The lift shall deploy to all levels (i.e., ground, curb, and intermediate positions) normally encountered in the operating environment. Where provided, each control for deploying, lowering, raising, and stowing the lift and lowering the roll-off barrier shall be of a momentary contact type requiring continuous manual pressure by the operator and shall not allow improper lift sequencing when the lift platform is occupied. The controls shall allow reversal of the lift operation sequence, such as raising or lowering a platform that is part way down, without allowing an occupied platform to fold or retract into the stowed position.

(ii) *Exception.* Where the lift is designed to deploy with its long dimension parallel to the vehicle axis and which pivots into or out of the vehicle while occupied (i.e., ''rotary lift''), the requirements of this paragraph (b)(2) prohibiting the lift from being stowed while occupied shall not apply if the stowed position is within the passenger compartment and the lift is intended to be stowed while occupied.

(3) *Emergency operation.* The lift shall incorporate an emergency method of deploying, lowering to ground level with a lift occupant, and raising and stowing the empty lift if the power to the lift fails. No emergency method, manual or otherwise, shall be capable of being operated in a manner that could be hazardous to the lift occupant or to the operator when operated according to manufacturer's instructions, and shall not permit the platform to be stowed or folded when occupied, unless the lift is a rotary lift and is intended to be stowed while occupied.

(4) *Power or equipment failure.* Platforms stowed in a vertical position, and deployed platforms when occupied, shall have provisions to prevent their deploying, falling, or folding any faster than 12 inches/second (305 mm/sec) or their dropping of an occupant in the event of a single failure of any load carrying component.

(5) *Platform barriers.* The lift platform shall be equipped with barriers to prevent any of the wheels of a wheelchair or mobility aid from rolling off the platform during its operation. A movable barrier or inherent design feature shall prevent a wheelchair or mobility aid from rolling off the edge closest to the vehicle until the platform is in its fully raised position. Each side of the lift platform which extends beyond the vehicle in its raised position shall have a barrier a minimum 1½ inches (13 mm) high. Such barriers shall not interfere with maneuvering into or out of the aisle. The loading-edge barrier (outer barrier) which functions as a loading ramp when the lift is at ground level, shall be sufficient when raised or closed, or a supplementary system shall be provided, to prevent a power wheelchair or mobility aid from riding over or defeating it. The outer barrier of the lift shall automatically raise or close, or a supplementary system shall automatically engage, and remain raised, closed, or engaged at all times that the platform is more than 3 inches (75 mm) above the roadway or sidewalk and the platform is occupied. Alternatively, a barrier or system may be raised, lowered, opened, closed, engaged, or disengaged by the lift operator, provided an interlock or inherent design feature prevents the lift from rising unless the barrier is raised or closed or the supplementary system is engaged.

(6) *Platform surface.* The platform surface shall be free of any protrusions of ¼ inch (6.5 mm) high and shall be slip resistant. The platform shall have a minimum clear width of 28½ inches (725 mm) at the platform, a minimum clear width of 30 inches (760 mm) measured from 2 inches (50 mm) above the platform surface to 30 inches (760 mm) above the platform, and a minimum clear length of 48 inches (1220 mm) measured from 2 inches (50 mm) above

the surface of the platform to 30 inches (760 mm) above the surface of the platform. (See Figure 1 to this part.)

(7) *Platform gaps.* Any openings between the platform surface and the raised barriers shall not exceed ⅝ inch (16 mm) in width. When the platform is at vehicle floor height with the inner barrier (if applicable) down or retracted, gaps between the forward lift platform edge and the vehicle floor shall not exceed ½ inch (13 mm) horizontally and ⅝ inch (16 mm) vertically. Platforms on semi-automatic lifts may have a hand hold not exceeding 1½ inches (28 mm) by 4½ inches (113 mm) located between the edge barriers.

(8) *Platform entrance ramp.* The entrance ramp, or loading-edge barrier used as a ramp, shall not exceed a slope of 1:8, measured on level ground, for a maximum rise of 3 inches (75 mm), and the transition from roadway or sidewalk to ramp may be vertical without edge treatment up to ¼ inch (6.5 mm) . Thresholds between ¼ inch (6.5 mm) and ½ inch (13 mm) high shall be beveled with a slope no greater than 1:2.

(9) *Platform deflection.* The lift platform (not including the entrance ramp) shall not deflect more than 3 degrees (exclusive of vehicle roll or pitch) in any direction between its unloaded position and its position when loaded with 600 pounds (2665 N) applied through a 26 inch (660 mm) by 26 inch test pallet at the centroid of the platform.

(10) *Platform movement.* No part of the platform shall move at a rate exceeding 6 inches/second (150 mm/sec) during lowering and lifting an occupant, and shall not exceed 12 inches/second (300 mm/sec) during deploying or stowing. This requirement does not apply to the deployment or stowage cycles of lifts that are manually deployed or stowed. The maximum platform horizontal and vertical acceleration when occupied shall be 0.3g.

(11) *Boarding direction.* The lift shall permit both inboard and outboard facing of wheelchair and mobility aid users.

(12) *Use by standees.* Lifts shall accommodate persons using walkers, crutches, canes or braces or who otherwise have difficulty using steps. The platform may be marked to indicate a preferred standing position.

(13) *Handrails.* Platforms on lifts shall be equipped with handrails on two sides, which move in tandem with the lift, and which shall be graspable and provide support to standees throughout the entire lift operation. Handrails shall have a usable component at least 8 inches (200 mm) long with the lowest portion a minimum 30 inches (760 mm) above the platform and the highest portion a maximum 38 inches (965 mm) above the platform. The handrails shall be capable of withstanding a force of 100 pounds (445 N) concentrated at any point on the handrail without permanent deformation of the rail or its supporting structure. The handrail shall have a cross-sectional diameter between 1¼ inches (32 mm) and 1½ inches (38 mm) or shall provide an equivalent grasping surface, and have eased edges with corner radii of not less than ⅝ inch (3.5 mm). Handrails shall be placed to provide a minimum 1½ inches (38 mm) knuckle clearance from the nearest adjacent surface. Handrails shall not interfere with wheelchair or mobility aid maneuverability when entering or leaving the vehicle.

(c) *Vehicle ramp*—(1) *Design load.* Ramps 30 inches (760 mm) or longer shall support a load of 600 pounds (2665 N), placed at the centroid of the ramp distributed over an area of 26 inches by 26 inches (660 mm by 660 mm), with a safety factor of at least 3 based on the ultimate strength of the material. Ramps shorter than 30 inches (760 mm) shall support a load of 300 pounds (1332 N).

(2) *Ramp surface.* The ramp surface shall be continuous and slip resistant; shall not have protrusions from the surface greater than ¼ inch (6.5 mm) high; shall have a clear width of 30 inches (760 mm); and shall accommodate both four-wheel and three-wheel mobility aids.

(3) *Ramp threshold.* The transition from roadway or sidewalk and the transition from vehicle floor to the ramp may be vertical without edge treatment up to ¼ inch (6.5 mm). Changes in level between ¼ inch (6.5 mm) and ½ inch (13 mm) shall be beveled with a slope no greater than 1:2.

(4) *Ramp barriers.* Each side of the ramp shall have barriers at least 2 inches (50 mm) high to prevent mobility aid wheels from slipping off.

(5) *Slope.* Ramps shall have the least slope practicable and shall not exceed 1:4 when deployed to ground level. If the height of the vehicle floor from which the ramp is deployed is 3 inches (75 mm) or less above a 6 inch (150 mm) curb, a maximum slope of 1:4 is permitted; if the height of the vehicle floor from which the ramp is deployed is 6 inches (150 mm) or less, but greater than 3 inches (75 mm), above a 6 inch (150 mm) curb, a maximum slope of 1:6 is permitted; if the height of the vehicle floor from which the ramp is deployed is 9 inches (225 mm) or less, but greater than 6 inches (150 mm), above a 6 inch curb, a maximum slope of 1:8 is permitted; if the height of the vehicle floor from which the ramp is deployed is greater than 9 inches (225 mm) above a 6 inch (150 mm) curb, a slope of 1:12 shall be achieved. Folding or telescoping ramps are permitted provided they meet all structural requirements of this section.

(6) *Attachment.* When in use for boarding or alighting, the ramp shall be firmly attached to the vehicle so that it is not subject to displacement when loading or unloading a heavy power mobility aid and that no gap between vehicle and ramp exceeds ⅝ inch (16 mm).

(7) *Stowage.* A compartment, securement system, or other appropriate method shall be provided to ensure that stowed ramps, including portable ramps stowed in the passenger area, do not impinge on a passenger's wheelchair or mobility aid or pose any hazard to passengers in the event of a sudden stop or maneuver.

(8) *Handrails.* If provided, handrails shall allow persons with disabilities to grasp them from outside the vehicle while starting to board, and to continue to use them throughout the boarding process, and shall have the top between 30 inches (760 mm) above the ramp surface. The handrails shall be capable of withstanding a force of 100 pounds (445 N) concentrated at any point on the handrail without permanent deformation of the rail or its supporting structure. The handrail shall have a cross-sectional diameter between 1¼ inches (32 mm) and 1½ inches (38 mm) or shall provide an equivalent grasping surface, and have eased edges with corner radii of not less than ⅛ inch (3.5 mm). Handrails shall not interfere with wheelchair or mobility aid maneuverability when entering or leaving the vehicle.

(d) *Securement devices*—(1) *Design load.* Securement systems, and their attachments to vehicles, shall restrain a force in the forward longitudinal direction of up to 2,000 pounds (8,880 N) per securement leg or clamping mechanism and a minimum of 4,000 pounds (17,760 N) for each mobility aid.

(2) *Location and size.* The securement system shall be placed as near to the accessible entrance as practicable and shall have a clear floor area of 30 inches (760 mm) by 48 inches (1220 mm). Such space shall adjoin, and may overlap, an access path. Not more than 6 inches (150 mm) of the required clear floor space may be accommodated for footrests under another seat, modesty panel, or other fixed element provided there is a minimum of 9 inches (230 mm) from the floor to the lowest part of the seat overhanging the space. Securement areas may have fold-down seats to accommodate other passengers when a wheelchair or mobility aid is not occupying the area, provided the seats, when folded up, do not obstruct the clear floor space required. (See Figure 2 to this part.)

(3) *Mobility aids accommodated.* The securement system shall secure common wheelchairs and mobility aids and shall either be automatic or easily attached by a person familiar with the system and mobility aid and having average dexterity.

(4) *Orientation.* At least one securement device or system required by paragraph (a) of this section shall secure the wheelchair or mobility aid facing toward the front of the vehicle. Additional securement devices or systems shall secure the wheelchair or mobility aid facing forward or rearward. Where the wheelchair or mobility aid is secured facing the rear of the vehicle, a padded barrier shall be provided. The padded barrier shall extend from a height of 38 inches (965 mm) from the vehicle floor to a height of 56

inches (1420 mm) from the vehicle floor with a width of 18 inches (455 mm), laterally centered immediately in back of the seated individual. Such barriers need not be solid provided equivalent protection is afforded.

(5) *Movement.* When the wheelchair or mobility aid is secured in accordance with manufacturer's instructions, the securement system shall limit the movement of an occupied wheelchair or mobility aid to no more than 2 inches (50 mm) in any direction under normal vehicle operating conditions.

(6) *Stowage.* When not being used for securement, or when the securement area can be used by standees, the securement system shall not interfere with passenger movement, shall not present any hazardous condition, shall be reasonably protected from vandalism, and shall be readily accessed when needed for use.

(7) *Seat belt and shoulder harness.* For each wheelchair or mobility aid securement device provided, a passenger seat belt and shoulder harness, complying with all applicable provisions of the Federal Motor Vehicle Safety Standards (49 CFR part 571), shall also be provided for use by wheelchair or mobility aid users. Such seat belts and shoulder harnesses shall not be used in lieu of a device which secures the wheelchair or mobility aid itself.

[63 FR 51698, 51703, Sept. 28, 1998]

§ 38.161 Moveable aisle armrests.

A minimum of 50% of aisle seats, including all moveable or removable seats at wheelchair or mobility aide securement locations, shall have an armrest on the aisle side which can be raised, removed, or retracted to permit easy entry or exit.

[63 FR 51700, 51703, Sept. 28, 1998]

Subpart H—Other Vehicles and Systems

§ 38.171 General.

(a) New, used and remanufactured vehicles and conveyances for systems not covered by other subparts of this part, to be considered accessible by regulations in part 37 of this title shall comply with this subpart.

(b) If portions of the vehicle or conveyance are modified in a way that affects or could affect accessibility, each such portion shall comply, to the extent practicable, with the applicable provisions of this subpart. This provision does not require that inaccessible vehicles be retrofitted with lifts, ramps or other boarding devices.

(c) Requirements for vehicles and systems not covered by this part shall be determined on a case-by-case basis by the Department of Transportation in consultation with the U.S. Architectural and Transportation Barriers Compliance Board (Access Board).

§ 38.173 Automated guideway transit vehicles and systems.

(a) Automated Guideway Transit (AGT) vehicles and systems, sometimes called ''people movers'', operated in airports and other areas where AGT vehicles travel at slow speed (i.e., at a speed of no more than 20 miles per hour at any location on their route during normal operation), shall comply with the provisions of § 38.53 (a) through (c), and §§ 38.55 through 38.61 of this part for rapid rail vehicles and systems.

(b) Where the vehicle covered by paragraph (a) will operate in an accessible station, the design of vehicles shall be coordinated with the boarding platform design such that the horizontal gap between a vehicle door at rest and the platform shall be no greater than 1 inch and the height of the vehicle floor shall be within plus or minus ½ inch of the platform height under all normal passenger load conditions. Vertical alignment may be accomplished by vehicle air suspension or other suitable means of meeting the requirement.

(c) In stations where open platforms are not protected by platform screens, a suitable device or system shall be provided to prevent, deter or warn individuals from stepping off the platform between cars. Acceptable devices include, but are not limited to, pantograph gates, chains, motion detectors or other appropriate devices.

(d) Light rail and rapid rail AGT vehicles and systems shall comply with subparts D and C of this part, respectively. AGT systems whose vehicles travel at a speed of more than 20 miles

per hour at any location on their route during normal operation are covered under this paragraph rather than under paragraph (a) of this section.

[56 FR 45756, Sept. 6, 1991, as amended at 61 FR 25416, May 21, 1996]

§ 38.175 High-speed rail cars, monorails and systems.

(a) All cars for high-speed rail systems, including but not limited to those using ''maglev'' or high speed steel-wheel-on-steel rail technology, and monorail systems operating primarily on dedicated rail (i.e., not used by freight trains) or guideway, in which stations are constructed in accordance with part 37, subpart C of this title, shall be designed for high-platform, level boarding and shall comply with §38.111(a) of this part for each type of car which is similar to intercity rail, §§38.111(d), 38.113 (a) through (c) and (e), 38.115 (a) and (b), 38.117 (a) and (b), 38.121 through 38.123, 38.125(d), and 38.127 (if applicable) of this part. The design of cars shall be coordinated with the boarding platform design such that the horizontal gap between a car door at rest and the platform shall be no greater than 3 inches and the height of the car floor shall be within plus or minus ⅝ inch of the platform height under all normal passenger load conditions. Vertical alignment may be accomplished by car air suspension or other suitable means of meeting the requirement. All doorways shall have, when the door is open, at least 2 footcandles of illumination measured on the door threshold.

(b) All other high-speed rail cars shall comply with the similar provisions of subpart F of this part.

§ 38.177 Ferries, excursion boats and other vessels. [Reserved]

§ 38.179 Trams, and similar vehicles, and systems

(a) New and used trams consisting of a tractor unit, with or without passenger accommodations, and one or more passenger trailer units, including but not limited to vehicles providing shuttle service to remote parking areas, between hotels and other public accommodations, and between and within amusement parks and other recreation areas, shall comply with this section. For purposes of determining applicability of 49 CFR 37.101, 37.103, or 37.105 the capacity of such a vehicle or ''train'' shall consist of the total combined seating capacity of all units, plus the driver, prior to any modification for accessibility.

(b) Each tractor unit which accommodates passengers and each trailer unit shall comply with §38.25 and §38.29 of this part. In addition, each such unit shall comply with §38.23 (b) or (c) and shall provide at least one space for wheelchair or mobility aid users complying with §38.23(d) of this part unless the complete operating unit consisting of tractor and one or more trailers can already accommodate at least two wheelchair or mobility aid users.

FIGURES TO PART 38

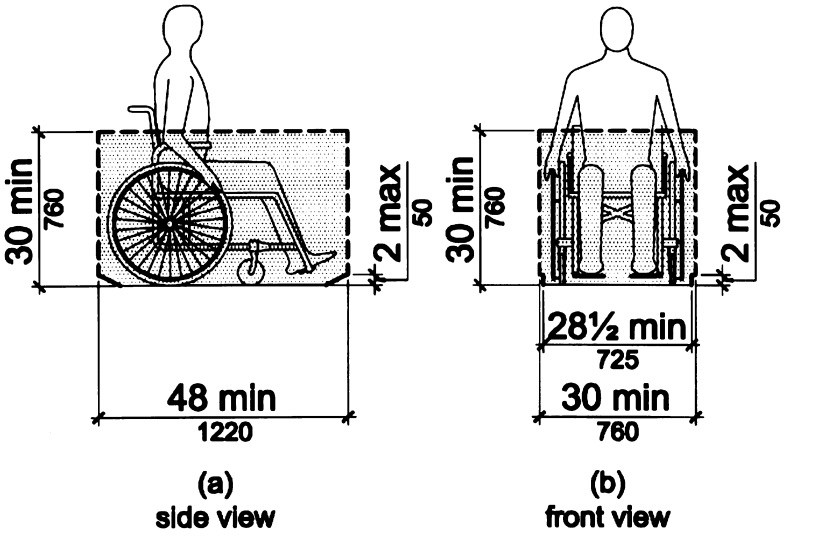

Figure 1
Wheelchair or Mobility Aid Envelope

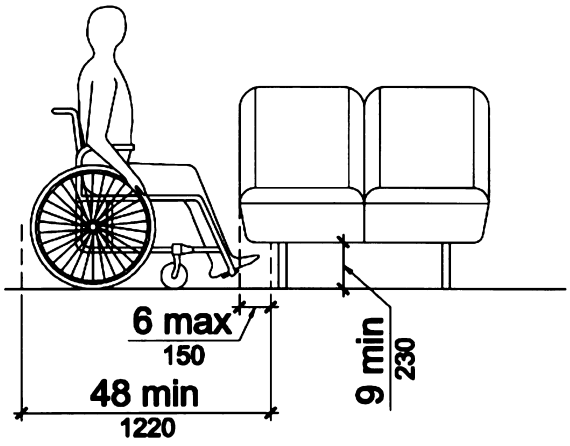

Figure 2
Toe Clearance Under a Fixed Element

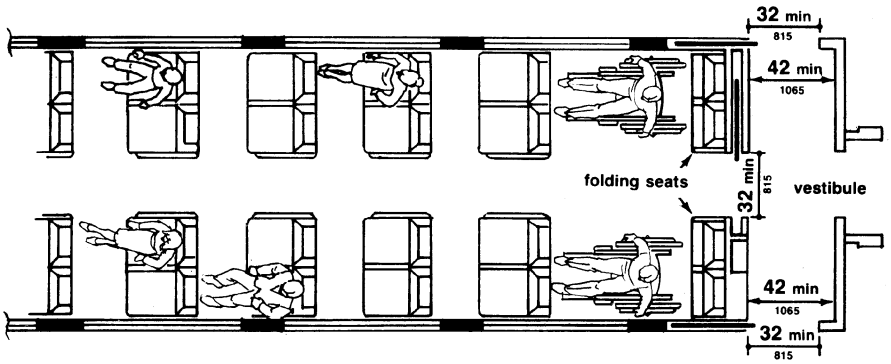

Fig. 3
Commuter Rail Car (without restrooms)

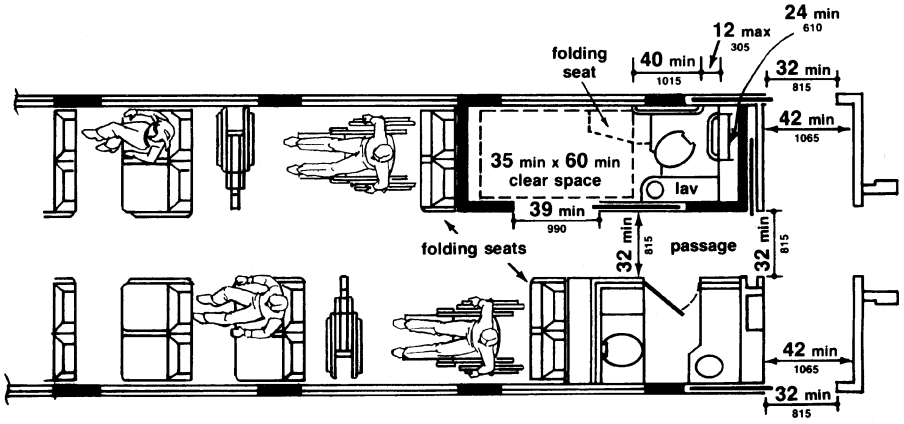

Fig. 4
Intercity Rail Car (with accessible restroom)

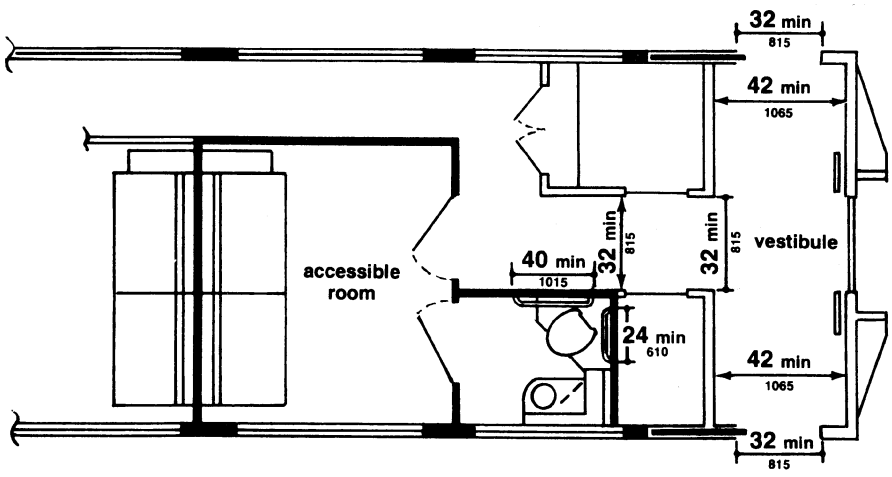

Fig. 5
Intercity Rail Car (with accessible sleeping compartment)

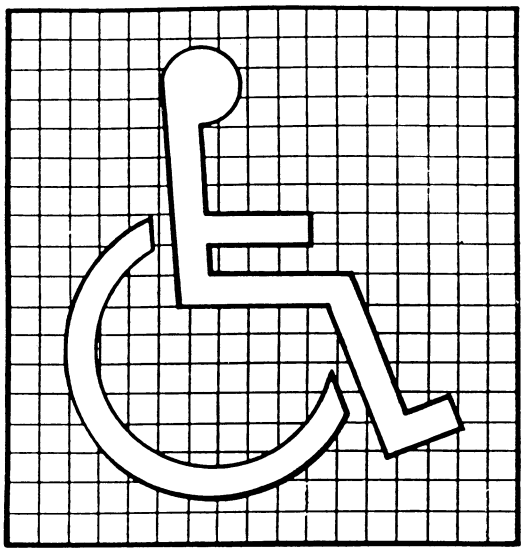

(a)
Proportions

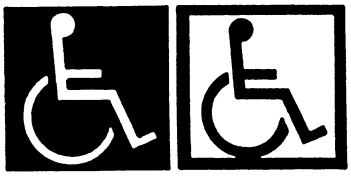

(b)
Display Conditions

Fig. 6
International Symbol of Accessibility

[56 FR 45756, Sept. 6, 1991, as amended at 63 FR 51700, 51703, Sept. 28, 1998]

APPENDIX TO PART 38—GUIDANCE MATERIAL

This appendix contains materials of an advisory nature and provides additional information that should help the reader to understand the minimum requirements of the standards or to design vehicles for greater accessibility. Each entry is applicable to all subparts of this part except where noted. Nothing in this appendix shall in any way obviate any obligation to comply with the requirements of the standards themselves.

I. Slip Resistant Surface—Aisles, Steps, Floor Areas Where People Walk, Floor Areas in Securement Locations, Lift Platforms, Ramps

Slip resistance is based on the frictional force necessary to keep a shoe heel or crutch tip from slipping on a walking surface under conditions likely to be found on the surface. While the dynamic coefficient of friction during walking varies in a complex and nonuniform way, the static coefficient of friction, which can be measured in several ways, provides a close approximation of the slip resistance of a surface. Contrary to popular belief, some slippage is necessary to walking,

especially for persons with restricted gaits; a truly ''non-slip'' surface could not be negotiated.

The Occupational Safety and Health Administration recommends that walking surfaces have a static coefficient of friction of 0.5. A research project sponsored by the Architectural and Transportation Barriers Compliance Board (Access Board) conducted tests with persons with disabilities and concluded that a higher coefficient of friction was needed by such persons. A static coefficient of friction of 0.6 is recommended for steps, floors, and lift platforms and 0.8 for ramps.

It is recognized that the coefficient of friction varies considerably due to the presence of contaminants, water, floor finishes, and other factors not under the control of transit providers and may be difficult to measure. Nevertheless, many common materials suitable for flooring are now labeled with information on the static coefficient of friction. While it may not be possible to compare one product directly with another, or to guarantee a constant measure, transit operators or vehicle designers and manufacturers are encouraged to specify materials with appropriate values. As more products include information on slip resistance, improved uniformity in measurement and specification is likely. The Access Board's advisory guidelines on Slip Resistant Surfaces provides additional information on this subject.

II. Color Contrast—Step Edges, Lift Platform Edges

The material used to provide contrast should contrast by at least 70%. Contrast in percent is determined by:

Contrast=[B − B)/B]×100

Where B=light reflectance value (LRV) of the lighter area

and B=light reflectance value (LRV) of the darker area.

Note that in any application both white and black are never absolute; thus, B never equals 100 and B is always greater than 0.

III. Handrails and Stanchions

In addition to the requirements for handrails and stanchions for rapid, light, and commuter rail vehicles, consideration should be given to the proximity of handrails or stanchions to the area in which wheelchair or mobility aid users may position themselves. When identifying the clear floor space where a wheelchair or mobility aid user can be accommodated, it is suggested that at least one such area be adjacent or in close proximity to a handrail or stanchion. Of course, such a handrail or stanchion cannot encroach upon the required 32 inch width required for the doorway or the route leading to the clear floor space which must be at least 30 by 48 inches in size.

IV. Priority Seating Signs and Other Signage

A. *Finish and Contrast.* The characters and background of signs should be eggshell, matte, or other non-glare finish. An eggshell finish (11 to 19 degree gloss on 60 degree glossimeter) is recommended. Characters and symbols shall contrast with their background—either light characters on a dark background or dark characters on a light background. Research indicates that signs are more legible for persons with low vision when characters contrast with their background by at least 70 percent. Contrast in percent shall be determined by:

Contrast=[B − B)/B]×100

Where B=light reflectance value (LRV) of the lighter area

and B=light reflectance value (LRV) of the darker area.

Note that in any application both white and black are never absolute; thus, B never equals 100 and B is always greater than 0.

The greatest readability is usually achieved through the use of light-colored characters or symbols on a dark background.

B. *Destination and Route Signs.* (The following specifications, which are required for buses (§38.39), are recommended for other types of vehicles, particularly light rail vehicles, were appropriate.)

1. Where destination or route information is displayed on the exterior of a vehicle, each vehicle shall have illuminated signs on the front and boarding side of the vehicle.

2. Characters on signs required by paragraph IV.B.1 of this appendix shall have a width-to-height ratio between 3:5 and 1:1 and a stroke width-to-height ratio between 1:5 and 1:10, with a minimum character height (using an upper case ''X'') of 1 inch for signs on the boarding side and a minimum character height of 2 inches for front ''headsigns,'' with ''wide'' spacing (generally, the space between letters shall be 1/16 the height of upper case letters), and shall contrast with the background, either dark-on-light or light-on-dark, or as recommended above.

C. *Designation of Accessible Vehicles.* The International Symbol of Accessibility should be displayed as shown in Figure 6.

V. Public Information Systems

This section has been reserved and there currently is no requirement that vehicles be equipped with an information system which is capable of providing the same or equivalent information to persons with hearing loss. While the Department assesses available and soon-to-be available technology during a study to be conducted during Fiscal Year 1992, entities are encouraged to employ whatever services, signage or alternative systems or devices that provide equivalent access and are available. Two possible types

of devices are visual display systems and listening systems. However, it should be noted that while visual display systems accommodate persons who are deaf or are hearing impaired, assistive listening systems aid only those with a partial loss of hearing.

A. *Visual Display Systems.* Announcements may be provided in a visual format by the use of electronic message boards or video monitors.

Electronic message boards using a light emitting diode (LED) or ''flip-dot'' display are currently provided in some transit stations and terminals and may be usable in vehicles. These devices may be used to provide real time or pre-programmed messages; however, real time message displays require the availability of an employee for keyboard entry of the information to be announced.

Video monitor systems, such as visual paging systems provided in some airports (e.g., Baltimore-Washington International Airport), are another alternative. The Architectural and Transportation Barriers Compliance Board (Access Board) can provide technical assistance and information on these systems (''Airport TDD Access: Two Case Studies,'' (1990)).

B. *Assistive Listening Systems.* Assistive listening systems (ALS) are intended to augment standard public address and audio systems by providing signals which can be received directly by persons with special receivers or their own hearing aids and which eliminate or filter background noise. Magnetic induction loops, infra-red and radio frequency systems are types of listening systems which are appropriate for various applications.

An assistive listening system appropriate for transit vehicles, where a group of persons or where the specific individuals are not known in advance, may be different from the system appropriate for a particular individual provided as an auxiliary aid or as part of a reasonable accommodation. The appropriate device for an individual is the type that individual can use, whereas the appropriate system for a station or vehicle will necessarily be geared toward the ''average'' or aggregate needs of various individuals. Earphone jacks with variable volume controls can benefit only people who have slight hearing loss and do not help people who use hearing aids. At the present time, magnetic induction loops are the most feasible type of listening system for people who use hearing aids equipped with ''T-coils'', but people without hearing aids or those with hearing aids not equipped with inductive pick-ups cannot use them without special receivers. Radio frequency systems can be extremely effective and inexpensive. People without hearing aids can use them, but people with hearing aids need a special receiver to use them as they are presently designed. If hearing aids had a jack to allow a by-pass of microphones, then radio frequency systems would be suitable for people with and without hearing aids. Some listening systems may be subject to interference from other equipment and feedback from hearing aids of people who are using the systems. Such interference can be controlled by careful engineering design that anticipates feedback sources in the surrounding area.

The Architectural and Transportation Barriers Compliance Board (Access Board) has published a pamphlet on Assistive Listening Systems which lists demonstration centers across the country where technical assistance can be obtained in selecting and installing appropriate systems. The State of New York has also adopted a detailed technical specification which may be useful.

VI. Over-the-Road Buses

A. *Door Width.* Achieving a 30 inch wide front door on an over-the-road bus is considered not feasible if doing so would necessitate reduction of the bus approach angle, relocating the front axle rearward, or increasing the bus overall length.

B. *Restrooms.* The following is provided to assist manufacturers and designers to create restrooms which can be used by people with disabilities. These specifications are derived from requirements for rail vehicles and represent compromises between space needed for use and constraints imposed by vehicle dimensions. As a result, some persons with disabilities cannot use a restroom which meets these specifications and operators who do provide such restrooms should provide passengers with disabilities sufficient advance information about design so that those passengers can assess their ability to use them. Designers should provide additional space beyond these minimum specifications whenever possible.

(1) If an accessible restroom is provided, it should be designed so as to allow a person using a wheelchair or mobility aid to enter and use such restroom as specified in paragraphs (1)(a) through (e) of section VI.B of this appendix.

(a) The minimum clear floor area should be 35 inches (890 mm) by 60 inches (1525 mm). Permanently installed fixtures may overlap this area a maximum of 6 inches (150 mm), if the lowest portion of the fixture is a minimum of 9 inches (230 mm) above the floor, and may overlap a maximum of 19 inches (485 mm), if the lowest portion of the fixture is a minimum of 29 inches (740 mm) above the floor, provided such fixtures do not interfere with access to the water closet. Fold-down or retractable seats or shelves may overlap the clear floor space at a lower height provided they can be easily folded up or moved out of the way.

(b) The height of the water closet should be 17 inches (430 mm) to 19 inches (485 mm) measured to the top of the toilet seat. Seats

should not be sprung to return to a lifted position.

(c) A grab bar at least 24 inches (610 mm) long should be mounted behind the water closet, and a horizontal grab bar at least 40 inches (1015 mm) long should be mounted on at least one side wall, with one end not more than 12 inches (305 mm) from the back wall, at a height between 33 inches (840 mm) and 36 inches (915 mm) above the floor.

(d) Faucets and flush controls should be operable with one hand and should not require tight grasping, pinching, or twisting of the wrist. The force required to activate controls should be no greater than 5 lbs (22.2 N). Controls for flush valves should be mounted no more than 44 inches (1120 mm) above the floor.

(e) Doorways on the end of the enclosure, opposite the water closet, should have a minimum clear opening width of 32 inches (815 mm). Door latches and hardware should be operable with one hand and should not require tight grasping, pinching, or twisting of the wrist.

(2) Accessible restrooms should be in close proximity to at least one seating location for persons using mobility aids and should be connected to such a space by an unobstructed path having a minimum width of 32 inches (815 mm).

C. *Visibility Through a Window.* Care should be taken so that the lift does not obscure the vision of the person occupying the securement position.

[56 FR 45756, Sept. 6, 1991, as amended at 63 FR 51702, 51703, Sept. 28, 1998]

PART 40—PROCEDURES FOR TRANSPORTATION WORKPLACE DRUG AND ALCOHOL TESTING PROGRAMS

Subpart A—Administrative Provisions

Sec.
40.1 Who does this regulation cover?
40.3 What do the terms used in this regulation mean?
40.5 Who issues authoritative interpretations of this regulation?
40.7 How can you get an exemption from a requirement in this regulation?

Subpart B—Employer Responsibilities

40.11 What are the general responsibilities of employers under this regulation?
40.13 How do DOT drug and alcohol tests relate to non-DOT tests?
40.15 May an employer use a service agent to meet DOT drug and alcohol testing requirements?
40.17 Is an employer responsible for obtaining information from its service agents?
40.19 [Reserved]
40.21 May an employer stand down an employee before the MRO has completed the verification process?
40.23 What actions do employers take after receiving verified test results?
40.25 Must an employer check on the drug and alcohol testing record of employees it is intending to use to perform safety-sensitive duties?
40.26 What form must an employer use to report Management Information System (MIS) data to a DOT agency?
40.27 May an employer require an employee to sign a consent or release in connection with the DOT drug and alcohol testing program?
40.29 Where is other information on employer responsibilities found in this regulation?

Subpart C—Urine Collection Personnel

40.31 Who may collect urine specimens for DOT drug testing?
40.33 What training requirements must a collector meet?
40.35 What information about the DER must employers provide to collectors?
40.37 Where is other information on the role of collectors found in this regulation?

Subpart D—Collection Sites, Forms, Equipment and Supplies Used in DOT Urine Collections

40.41 Where does a urine collection for a DOT drug test take place?
40.43 What steps must operators of collection sites take to protect the security and integrity of urine collections?
40.45 What form is used to document a DOT urine collection?
40.47 May employers use the CCF for non-Federal collections or non-Federal forms for DOT collections?
40.49 What materials are used to collect urine specimens?
40.51 What materials are used to send urine specimens to the laboratory?

Subpart E—Urine Specimen Collections

40.61 What are the preliminary steps in the collection process?
40.63 What steps does the collector take in the collection process before the employee provides a urine specimen?
40.65 What does the collector check for when the employee presents a specimen?
40.67 When and how is a directly observed collection conducted?
40.69 How is a monitored collection conducted?
40.71 How does the collector prepare the specimens?

40.73 How is the collection process completed?

Subpart F—Drug Testing Laboratories

40.81 What laboratories may be used for DOT drug testing?
40.83 How do laboratories process incoming specimens?
40.85 What drugs do laboratories test for?
40.87 What are the cutoff concentrations for initial and confirmation tests?
40.89 What is validity testing, and are laboratories required to conduct it?
40.91 What validity tests must laboratories conduct on primary specimens?
40.93 What criteria do laboratories use to establish that a specimen is dilute or substituted?
40.95 What are the adulterant cutoff concentrations for initial and confirmation tests?
40.96 What criteria do laboratories use to establish that a specimen is invalid?
40.97 What do laboratories report and how do they report it?
40.99 How long does the laboratory retain specimens after testing?
40.101 What relationship may a laboratory have with an MRO?
40.103 What are the requirements for submitting blind specimens to a laboratory?
40.105 What happens if the laboratory reports a result different from that expected for a blind specimen?
40.107 Who may inspect laboratories?
40.109 What documentation must the laboratory keep, and for how long?
40.111 When and how must a laboratory disclose statistical summaries and other information it maintains?
40.113 Where is other information concerning laboratories found in this regulation?

Subpart G—Medical Review Officers and the Verification Process

40.121 Who is qualified to act as an MRO?
40.123 What are the MRO's responsibilities in the DOT drug testing program?
40.125 What relationship may an MRO have with a laboratory?
40.127 What are the MRO's functions in reviewing negative test results?
40.129 What are the MRO's functions in reviewing laboratory confirmed non-negative drug test results?
40.131 How does the MRO or DER notify an employee of the verification process after receiving laboratory confirmed non-negative drug test results?
40.133 Without interviewing the employee, under what circumstances may the MRO verify a test result as positive, or as a refusal to test because of adulteration or substitution, or as cancelled because the test was invalid?
40.135 What does the MRO tell the employee at the beginning of the verification interview?
40.137 On what basis does the MRO verify test results involving marijuana, cocaine, amphetamines, or PCP?
40.139 On what basis does the MRO verify test results involving opiates?
40.141 How does the MRO obtain information for the verification decision?
40.143 [Reserved]
40.145 On what basis does the MRO verify test results involving adulteration or substitution?
40.147 [Reserved]
40.149 May the MRO change a verified drug test result?
40.151 What are MROs prohibited from doing as part of the verification process?
40.153 How does the MRO notify employees of their right to a test of the split specimen?
40.155 What does the MRO do when a negative or positive test result is also dilute?
40.157 [Reserved]
40.159 What does the MRO do when a drug test result is invalid?
40.160 What does the MRO do when a valid test result cannot be produced and a negative result is required?
40.161 What does the MRO do when a drug test specimen is rejected for testing?
40.162 What must MROs do with multiple verified results for the same testing event?
40.163 How does the MRO report drug test results?
40.165 To whom does the MRO transmit reports of drug test results?
40.167 How are MRO reports of drug results transmitted to the employer?
40.169 Where is other information concerning the role of MROs and the verification process found in this regulation?

Subpart H—Split Specimen Tests

40.171 How does an employee request a test of a split specimen?
40.173 Who is responsible for paying for the test of a split specimen?
40.175 What steps does the first laboratory take with a split specimen?
40.177 What does the second laboratory do with the split specimen when it is tested to reconfirm the presence of a drug or drug metabolite?
40.179 What does the second laboratory do with the split specimen when it is tested to reconfirm an adulterated test result?
40.181 What does the second laboratory do with the split specimen when it is tested to reconfirm a substituted test result?

40.183 What information do laboratories report to MROs regarding split specimen results?
40.185 Through what methods and to whom must a laboratory report split specimen results?
40.187 What does the MRO do with split specimen laboratory results?
40.189 Where is other information concerning split specimens found in this regulation?

Subpart I—Problems in Drug Tests

40.191 What is a refusal to take a DOT drug test, and what are the consequences?
40.193 What happens when an employee does not provide a sufficient amount of urine for a drug test?
40.195 What happens when an individual is unable to provide a sufficient amount of urine for a pre-employment follow-up or return-to-duty test because of a permanent or long-term medical condition?
40.197 What happens when an employer receives a report of a dilute specimen?
40.199 What problems always cause a drug test to be cancelled?
40.201 What problems always cause a drug test to be cancelled and may result in a requirement for another collection?
40.203 What problems cause a drug test to be cancelled unless they are corrected?
40.205 How are drug test problems corrected?
40.207 What is the effect of a cancelled drug test?
40.208 What problem requires corrective action but does not result in the cancellation of a test?
40.209 What procedural problems do not result in the cancellation of a test and do not require correction?

Subpart J—Alcohol Testing Personnel

40.211 Who conducts DOT alcohol tests?
40.213 What training requirements must STTs and BATs meet?
40.215 What information about the DER do employers have to provide to BATs and STTs?
40.217 Where is other information on the role of STTs and BATs found in this regulation?

Subpart K—Testing Sites, Forms, Equipment and Supplies Used in Alcohol Testing

40.221 Where does an alcohol test take place?
40.223 What steps must be taken to protect the security of alcohol testing sites?
40.225 What form is used for an alcohol test?
40.227 May employers use the ATF for non-DOT tests, or non-DOT forms for DOT tests?
40.229 What devices are used to conduct alcohol screening tests?
40.231 What devices are used to conduct alcohol confirmation tests?
40.233 What are the requirements for proper use and care of EBTs?
40.235 What are the requirements for proper use and care of ASDs?

Subpart L—Alcohol Screening Tests

40.241 What are the first steps in any alcohol screening test?
40.243 What is the procedure for an alcohol screening test using an EBT or non-evidential breath ASD?
40.245 What is the procedure for an alcohol screening test using a saliva ASD or a breath tube ASD?
40.247 What procedures does the BAT or STT follow after a screening test result?

Subpart M—Alcohol Confirmation Tests

40.251 What are the first steps in an alcohol confirmation test?
40.253 What are the procedures for conducting an alcohol confirmation test?
40.255 What happens next after the alcohol confirmation test result?

Subpart N—Problems in Alcohol Testing

40.261 What is a refusal to take an alcohol test, and what are the consequences?
40.263 What happens when an employee is unable to provide a sufficient amount of saliva for an alcohol screening test?
40.265 What happens when an employee is unable to provide a sufficient amount of breath for an alcohol test?
40.267 What problems always cause an alcohol test to be cancelled?
40.269 What problems cause an alcohol test to be cancelled unless they are corrected?
40.271 How are alcohol testing problems corrected?
40.273 What is the effect of a cancelled alcohol test?
40.275 What is the effect of procedural problems that are not sufficient to cancel an alcohol test?
40.277 Are alcohol tests other than saliva or breath permitted under these regulations?

Subpart O—Substance Abuse Professionals and the Return-to-Duty Process

40.281 Who is qualified to act as a SAP?
40.283 How does a certification organization obtain recognition for its members as SAPs?
40.285 When is a SAP evaluation required?

40.287 What information is an employer required to provide concerning SAP services to an employee who has a DOT drug and alcohol regulation violation?
40.289 Are employers required to provide SAP and treatment services to employees?
40.291 What is the role of the SAP in the evaluation, referral, and treatment process of an employee who has violated DOT agency drug and alcohol testing regulations?
40.293 What is the SAP's function in conducting the initial evaluation of an employee?
40.295 May employees or employers seek a second SAP evaluation if they disagree with the first SAP's recommendations?
40.297 Does anyone have the authority to change a SAP's initial evaluation?
40.299 What is the SAP's role and what are the limits on a SAP's discretion in referring employees for education and treatment?
40.301 What is the SAP's function in the follow-up evaluation of an employee?
40.303 What happens if the SAP believes the employee needs additional treatment, aftercare, or support group services even after the employee returns to safety-sensitive duties?
40.305 How does the return-to-duty process conclude?
40.307 What is the SAP's function in prescribing the employee's follow-up tests?
40.309 What are the employer's responsibilities with respect to the SAP's directions for follow-up tests?
40.311 What are requirements concerning SAP reports?
40.313 Where is other information on SAP functions and the return-to-duty process found in this regulation?

Subpart P—Confidentiality and Release of Information

40.321 What is the general confidentiality rule for drug and alcohol test information?
40.323 May program participants release drug or alcohol test information in connection with legal proceedings?
40.325 [Reserved]
40.327 When must the MRO report medical information gathered in the verification process?
40.329 What information must laboratories, MROs, and other service agents release to employees?
40.331 To what additional parties must employers and service agents release information?
40.333 What records must employers keep?

Subpart Q—Roles And Responsibilities of Service Agents

40.341 Must service agents comply with DOT drug and alcohol testing requirements?
40.343 What tasks may a service agent perform for an employer?
40.345 In what circumstances may a C/TPA act as an intermediary in the transmission of drug and alcohol testing information to employers?
40.347 What functions may C/TPAs perform with respect administering testing?
40.349 What records may a service agent receive and maintain?
40.351 What confidentiality requirements apply to service agents?
40.353 What principles govern the interaction between MROs and other service agents?
40.355 What limitations apply to the activities of service agents?

Subpart R—Public Interest Exclusions

40.361 What is the purpose of a public interest exclusion (PIE)?
40.363 On what basis may the Department issue a PIE?
40.365 What is the Department's policy concerning starting a PIE proceeding?
40.367 Who initiates a PIE proceeding?
40.369 What is the discretion of an initiating official in starting a PIE proceeding?
40.371 On what information does an initiating official rely in deciding whether to start a PIE proceeding?
40.373 Before starting a PIE proceeding, does the initiating official give the service agent an opportunity to correct problems?
40.375 How does the initiating official start a PIE proceeding?
40.377 Who decides whether to issue a PIE?
40.379 How do you contest the issuance of a PIE?
40.381 What information do you present to contest the proposed issuance of a PIE?
40.383 What procedures apply if you contest the issuance of a PIE?
40.385 Who bears the burden of proof in a PIE proceeding?
40.387 What matters does the Director decide concerning a proposed PIE?
40.389 What factors may the Director consider?
40.391 What is the scope of a PIE?
40.393 How long does a PIE stay in effect?
40.395 Can you settle a PIE proceeding?
40.397 When does the Director make a PIE decision?
40.399 How does the Department notify service agents of its decision?
40.401 How does the Department notify employers and the public about a PIE?
40.403 Must a service agent notify its clients when the Department issues a PIE?

40.405 May the Federal courts review PIE decisions?
40.407 May a service agent ask to have a PIE reduced or terminated?
40.409 What does the issuance of a PIE mean to transportation employers?
40.411 What is the role of the DOT Inspector General's office?
40.413 How are notices sent to service agents?

APPENDIX A TO PART 40—DOT STANDARDS FOR URINE COLLECTION KITS
APPENDIX B TO PART 40—DOT DRUG TESTING SEMI-ANNUAL LABORATORY REPORT TO EMPLOYERS
APPENDIX C TO PART 40—APPENDIX C TO PART 40—DOT DRUG TESTING SEMI-ANNUAL LABORATORY REPORT TO DOT
APPENDIX D TO PART 40—REPORT FORMAT: SPLIT SPECIMEN FAILURE TO RECONFIRM
APPENDIX E TO PART 40—SAP EQUIVALENCY REQUIREMENTS FOR CERTIFICATION ORGANIZATIONS
APPENDIX F TO PART 40—DRUG AND ALCOHOL TESTING INFORMATION THAT C/TPAS MAY TRANSMIT TO EMPLOYERS
APPENDIX G TO PART 40—ALCOHOL TESTING FORM (ATF)
APPENDIX H TO PART 40—DOT DRUG AND ALCOHOL TESTING MANAGEMENT INFORMATION SYSTEM (MIS) DATA COLLECTION FORM

AUTHORITY: 49 U.S.C. 102, 301, 322, 5331, 20140, 31306, and 45101 *et seq.*; 49 U.S.C. 322.

SOURCE: 65 FR 79526, Dec. 19, 2000, unless otherwise noted.

EDITORIAL NOTE: Nomenclature changes to part 40 appear at 73 FR 33329, June 12, 2008.

Subpart A—Administrative Provisions

§ 40.1 Who does this regulation cover?

(a) This part tells all parties who conduct drug and alcohol tests required by Department of Transportation (DOT) agency regulations how to conduct these tests and what procedures to use.

(b) This part concerns the activities of transportation employers, safety-sensitive transportation employees (including self-employed individuals, contractors and volunteers as covered by DOT agency regulations), and service agents.

(c) Nothing in this part is intended to supersede or conflict with the implementation of the Federal Railroad Administration's post-accident testing program (see 49 CFR 219.200).

§ 40.3 What do the terms used in this regulation mean?

In this part, the terms listed in this section have the following meanings:

Adulterated specimen. A urine specimen containing a substance that is not a normal constituent or containing an endogenous substance at a concentration that is not a normal physiological concentration.

Affiliate. Persons are affiliates of one another if, directly or indirectly, one controls or has the power to control the other, or a third party controls or has the power to control both. Indicators of control include, but are not limited to: interlocking management or ownership; shared interest among family members; shared facilities or equipment; or common use of employees. Following the issuance of a public interest exclusion, an organization having the same or similar management, ownership, or principal employees as the service agent concerning whom a public interest exclusion is in effect is regarded as an affiliate. This definition is used in connection with the public interest exclusion procedures of Subpart R of this part.

Air blank. In evidential breath testing devices (EBTs) using gas chromatography technology, a reading of the device's internal standard. In all other EBTs, a reading of ambient air containing no alcohol.

Alcohol. The intoxicating agent in beverage alcohol, ethyl alcohol or other low molecular weight alcohols, including methyl or isopropyl alcohol.

Alcohol concentration. The alcohol in a volume of breath expressed in terms of grams of alcohol per 210 liters of breath as indicated by a breath test under this part.

Alcohol confirmation test. A subsequent test using an EBT, following a screening test with a result of 0.02 or greater, that provides quantitative data about the alcohol concentration.

Alcohol screening device (ASD). A breath or saliva device, other than an EBT, that is approved by the National Highway Traffic Safety Administration (NHTSA) and placed on a conforming products list (CPL) for such devices.

Alcohol screening test. An analytic procedure to determine whether an employee may have a prohibited concentration of alcohol in a breath or saliva specimen.

Alcohol testing site. A place selected by the employer where employees present themselves for the purpose of providing breath or saliva for an alcohol test.

Alcohol use. The drinking or swallowing of any beverage, liquid mixture or preparation (including any medication), containing alcohol.

Aliquot. A fractional part of a specimen used for testing. It is taken as a sample representing the whole specimen.

Blind specimen or blind performance test specimen. A specimen submitted to a laboratory for quality control testing purposes, with a fictitious identifier, so that the laboratory cannot distinguish it from an employee specimen.

Breath Alcohol Technician (BAT). A person who instructs and assists employees in the alcohol testing process and operates an evidential breath testing device.

Cancelled test. A drug or alcohol test that has a problem identified that cannot be or has not been corrected, or which this part otherwise requires to be cancelled. A cancelled test is neither a positive nor a negative test.

Chain of custody. The procedure used to document the handling of the urine specimen from the time the employee gives the specimen to the collector until the specimen is destroyed. This procedure uses the Federal Drug Testing Custody and Control Form (CCF).

Collection container. A container into which the employee urinates to provide the specimen for a drug test.

Collection site. A place selected by the employer where employees present themselves for the purpose of providing a urine specimen for a drug test.

Collector. A person who instructs and assists employees at a collection site, who receives and makes an initial inspection of the specimen provided by those employees, and who initiates and completes the CCF.

Confirmatory drug test. A second analytical procedure to identify the presence of a specific drug or metabolite which is independent of the initial test and which uses a different technique and chemical principle from that of the initial test in order to ensure reliability and accuracy. (Gas chromatography/mass spectrometry (GC/MS) is the only authorized confirmation method for cocaine, marijuana, opiates, amphetamines, and phencyclidine).

Confirmatory validity test. A second test performed on a different aliquot of the original urine specimen to further support a validity test result.

Confirmed drug test. A confirmation test result received by an MRO from a laboratory.

Consortium/Third-party administrator (C/TPA). A service agent that provides or coordinates the provision of a variety of drug and alcohol testing services to employers. C/TPAs typically perform administrative tasks concerning the operation of the employers' drug and alcohol testing programs. This term includes, but is not limited to, groups of employers who join together to administer, as a single entity, the DOT drug and alcohol testing programs of its members. C/TPAs are not ''employers'' for purposes of this part.

Continuing education. Training for medical review officers (MROs) and substance abuse professionals (SAPs) who have completed qualification training and are performing MRO or SAP functions, designed to keep MROs and SAPs current on changes and developments in the DOT drug and alcohol testing program.

Designated employer representative (DER). An employee authorized by the employer to take immediate action(s) to remove employees from safety-sensitive duties, or cause employees to be removed from these covered duties, and to make required decisions in the testing and evaluation processes. The DER also receives test results and other communications for the employer, consistent with the requirements of this part. Service agents cannot act as DERs.

Dilute specimen. A urine specimen with creatinine and specific gravity values that are lower than expected for human urine.

DOT, The Department, DOT agency. These terms encompass all DOT agencies, including, but not limited to, the

United States Coast Guard (USCG), the Federal Aviation Administration (FAA), the Federal Railroad Administration (FRA), the Federal Motor Carrier Safety Administration (FMCSA), the Federal Transit Administration (FTA), the National Highway Traffic Safety Administration (NHTSA), the Pipeline and Hazardous Materials Safety Administration (PHMSA), and the Office of the Secretary (OST). These terms include any designee of a DOT agency.

Drugs. The drugs for which tests are required under this part and DOT agency regulations are marijuana, cocaine, amphetamines, phencyclidine (PCP), and opiates.

Employee. Any person who is designated in a DOT agency regulation as subject to drug testing and/or alcohol testing. The term includes individuals currently performing safety-sensitive functions designated in DOT agency regulations and applicants for employment subject to pre-employment testing. For purposes of drug testing under this part, the term employee has the same meaning as the term ''donor'' as found on CCF and related guidance materials produced by the Department of Health and Human Services.

Employer. A person or entity employing one or more employees (including an individual who is self-employed) subject to DOT agency regulations requiring compliance with this part. The term includes an employer's officers, representatives, and management personnel. Service agents are not employers for the purposes of this part.

Error Correction Training. Training provided to BATs, collectors, and screening test technicians (STTs) following an error that resulted in the cancellation of a drug or alcohol test. Error correction training must be provided in person or by a means that provides real-time observation and interaction between the instructor and trainee.

Evidential Breath Testing Device (EBT). A device approved by NHTSA for the evidential testing of breath at the .02 and .04 alcohol concentrations, placed on NHTSA's Conforming Products List (CPL) for ''Evidential Breath Measurement Devices'' and identified on the CPL as conforming with the model specifications available from NHTSA's Traffic Safety Program.

HHS. The Department of Health and Human Services or any designee of the Secretary, Department of Health and Human Services.

Initial drug test (also known as a Screening drug test). An immunoassay test to eliminate ''negative'' urine specimens from further consideration and to identify the presumptively positive specimens that require confirmation or further testing.

Initial validity test. The first test used to determine if a urine specimen is adulterated, diluted, or substituted.

Invalid drug test. The result of a drug test for a urine specimen that contains an unidentified adulterant or an unidentified interfering substance, has abnormal physical characteristics, or has an endogenous substance at an abnormal concentration that prevents the laboratory from completing or obtaining a valid drug test result.

Invalid result. The result reported by a laboratory for a urine specimen that contains an unidentified adulterant, contains an unidentified interfering substance, has an abnormal physical characteristic, or has an endogenous substance at an abnormal concentration that prevents the laboratory from completing testing or obtaining a valid drug test result.

Laboratory. Any U.S. laboratory certified by HHS under the National Laboratory Certification Program as meeting the minimum standards of Subpart C of the HHS Mandatory Guidelines for Federal Workplace Drug Testing Programs; or, in the case of foreign laboratories, a laboratory approved for participation by DOT under this part. (The HHS Mandatory Guidelines for Federal Workplace Drug Testing Programs are available on the internet at *http://www.health.org/workpl.htm* or from the Division of Workplace Programs, 1 Choke Cherry Road, Room 2–1035, Rockville MD 20587.

Limit of Detection (LOD). The lowest concentration at which an analyte can be reliably shown to be present under defined conditions.

Medical Review Officer (MRO). A person who is a licensed physician and who is responsible for receiving and reviewing laboratory results generated

by an employer's drug testing program and evaluating medical explanations for certain drug test results.

Non-negative specimen. A urine specimen that is reported as adulterated, substituted, positive (for drug(s) or drug metabolite(s)), and/or invalid.

Office of Drug and Alcohol Policy and Compliance (ODAPC). The office in the Office of the Secretary, DOT, that is responsible for coordinating drug and alcohol testing program matters within the Department and providing information concerning the implementation of this part.

Oxidizing adulterant. A substance that acts alone or in combination with other substances to oxidize drugs or drug metabolites to prevent the detection of the drug or drug metabolites, or affects the reagents in either the initial or confirmatory drug test.

Primary specimen. In drug testing, the urine specimen bottle that is opened and tested by a first laboratory to determine whether the employee has a drug or drug metabolite in his or her system; and for the purpose of validity testing. The primary specimen is distinguished from the split specimen, defined in this section.

Qualification Training. The training required in order for a collector, BAT, MRO, SAP, or STT to be qualified to perform their functions in the DOT drug and alcohol testing program. Qualification training may be provided by any appropriate means (*e.g.,* classroom instruction, internet application, CD-ROM, video).

Refresher Training. The training required periodically for qualified collectors, BATs, and STTs to review basic requirements and provide instruction concerning changes in technology (*e.g.*, new testing methods that may be authorized) and amendments, interpretations, guidance, and issues concerning this part and DOT agency drug and alcohol testing regulations. Refresher training can be provided by any appropriate means (*e.g.*, classroom instruction, internet application, CD-ROM, video).

Screening drug test. See Initial drug test definition above.

Screening Test Technician (STT). A person who instructs and assists employees in the alcohol testing process and operates an ASD.

Secretary. The Secretary of Transportation or the Secretary's designee.

Service agent. Any person or entity, other than an employee of the employer, who provides services specified under this part to employers and/or employees in connection with DOT drug and alcohol testing requirements. This includes, but is not limited to, collectors, BATs and STTs, laboratories, MROs, substance abuse professionals, and C/TPAs. To act as service agents, persons and organizations must meet the qualifications set forth in applicable sections of this part. Service agents are not employers for purposes of this part.

Shipping container. A container that is used for transporting and protecting urine specimen bottles and associated documents from the collection site to the laboratory.

Specimen bottle. The bottle that, after being sealed and labeled according to the procedures in this part, is used to hold the urine specimen during transportation to the laboratory.

Split specimen. In drug testing, a part of the urine specimen that is sent to a first laboratory and retained unopened, and which is transported to a second laboratory in the event that the employee requests that it be tested following a verified positive test of the primary specimen or a verified adulterated or substituted test result.

Stand-down. The practice of temporarily removing an employee from the performance of safety-sensitive functions based only on a report from a laboratory to the MRO of a confirmed positive test for a drug or drug metabolite, an adulterated test, or a substituted test, before the MRO has completed verification of the test result.

Substance Abuse Professional (SAP). A person who evaluates employees who have violated a DOT drug and alcohol regulation and makes recommendations concerning education, treatment, follow-up testing, and aftercare.

Substituted specimen. A urine specimen with creatinine and specific gravity values that are so diminished or so divergent that they are not consistent with normal human urine.

Verified test. A drug test result or validity testing result from an HHS-certified laboratory that has undergone review and final determination by the MRO.

[65 FR 79526, Dec. 19, 2000, as amended at 66 FR 41950, Aug. 9, 2001; 71 FR 49384, Aug. 23, 2006; 71 FR 55347, Sept. 22, 2006; 73 FR 35969, June 25, 2008]

§ 40.5 Who issues authoritative interpretations of this regulation?

ODAPC and the DOT Office of General Counsel (OGC) provide written interpretations of the provisions of this part. These written DOT interpretations are the only official and authoritative interpretations concerning the provisions of this part. DOT agencies may incorporate ODAPC/OGC interpretations in written guidance they issue concerning drug and alcohol testing matters. Only Part 40 interpretations issued after August 1, 2001, are considered valid.

§ 40.7 How can you get an exemption from a requirement in this regulation?

(a) If you want an exemption from any provision of this part, you must request it in writing from the Office of the Secretary of Transportation, under the provisions and standards of 49 CFR part 5. You must send requests for an exemption to the following address: Department of Transportation, Deputy Assistant General Counsel for Regulation and Enforcement, 1200 New Jersey Avenue, SE., Washington, DC 20590.

(b) Under the standards of 49 CFR part 5, we will grant the request only if the request documents special or exceptional circumstances, not likely to be generally applicable and not contemplated in connection with the rulemaking that established this part, that make your compliance with a specific provision of this part impracticable.

(c) If we grant you an exemption, you must agree to take steps we specify to comply with the intent of the provision from which an exemption is granted.

(d) We will issue written responses to all exemption requests.

Subpart B—Employer Responsibilities

§ 40.11 What are the general responsibilities of employers under this regulation?

(a) As an employer, you are responsible for meeting all applicable requirements and procedures of this part.

(b) You are responsible for all actions of your officials, representatives, and agents (including service agents) in carrying out the requirements of the DOT agency regulations.

(c) All agreements and arrangements, written or unwritten, between and among employers and service agents concerning the implementation of DOT drug and alcohol testing requirements are deemed, as a matter of law, to require compliance with all applicable provisions of this part and DOT agency drug and alcohol testing regulations. Compliance with these provisions is a material term of all such agreements and arrangements.

§ 40.13 How do DOT drug and alcohol tests relate to non-DOT tests?

(a) DOT tests must be completely separate from non-DOT tests in all respects.

(b) DOT tests must take priority and must be conducted and completed before a non-DOT test is begun. For example, you must discard any excess urine left over from a DOT test and collect a separate void for the subsequent non-DOT test.

(c) Except as provided in paragraph (d) of this section, you must not perform any tests on DOT urine or breath specimens other than those specifically authorized by this part or DOT agency regulations. For example, you may not test a DOT urine specimen for additional drugs, and a laboratory is prohibited from making a DOT urine specimen available for a DNA test or other types of specimen identity testing.

(d) The single exception to paragraph (c) of this section is when a DOT drug test collection is conducted as part of a physical examination required by DOT agency regulations. It is permissible to conduct required medical tests related to this physical examination (*e.g.*, for glucose) on any urine remaining in the collection container after the drug test

urine specimens have been sealed into the specimen bottles.

(e) No one is permitted to change or disregard the results of DOT tests based on the results of non-DOT tests. For example, as an employer you must not disregard a verified positive DOT drug test result because the employee presents a negative test result from a blood or urine specimen collected by the employee's physician or a DNA test result purporting to question the identity of the DOT specimen.

(f) As an employer, you must not use the CCF or the ATF in your non-DOT drug and alcohol testing programs. This prohibition includes the use of the DOT forms with references to DOT programs and agencies crossed out. You also must always use the CCF and ATF for all your DOT-mandated drug and alcohol tests.

§ 40.15 May an employer use a service agent to meet DOT drug and alcohol testing requirements?

(a) As an employer, you may use a service agent to perform the tasks needed to comply with this part and DOT agency drug and alcohol testing regulations, consistent with the requirements of Subpart Q and other applicable provisions of this part.

(b) As an employer, you are responsible for ensuring that the service agents you use meet the qualifications set forth in this part (*e.g.*, § 40.121 for MROs). You may require service agents to show you documentation that they meet the requirements of this part (*e.g.*, documentation of MRO qualifications required by § 40.121(e)).

(c) You remain responsible for compliance with all applicable requirements of this part and other DOT drug and alcohol testing regulations, even when you use a service agent. If you violate this part or other DOT drug and alcohol testing regulations because a service agent has not provided services as our rules require, a DOT agency can subject you to sanctions. Your good faith use of a service agent is not a defense in an enforcement action initiated by a DOT agency in which your alleged noncompliance with this part or a DOT agency drug and alcohol regulation may have resulted from the service agent's conduct.

(d) As an employer, you must not permit a service agent to act as your DER.

§ 40.17 Is an employer responsible for obtaining information from its service agents?

Yes, as an employer, you are responsible for obtaining information required by this part from your service agents. This is true whether or not you choose to use a C/TPA as an intermediary in transmitting information to you. For example, suppose an applicant for a safety-sensitive job takes a pre-employment drug test, but there is a significant delay in your receipt of the test result from an MRO or C/TPA. You must not assume that ''no news is good news'' and permit the applicant to perform safety-sensitive duties before receiving the result. This is a violation of the Department's regulations.

§ 40.19 [Reserved]

§ 40.21 May an employer stand down an employee before the MRO has completed the verification process?

(a) As an employer, you are prohibited from standing employees down, except consistent with a waiver a DOT agency grants under this section.

(b) You may make a request to the concerned DOT agency for a waiver from the prohibition of paragraph (a) of this section. Such a waiver, if granted, permits you to stand an employee down following the MRO's receipt of a laboratory report of a confirmed positive test for a drug or drug metabolite, an adulterated test, or a substituted test pertaining to the employee.

(1) For this purpose, the concerned DOT agency is the one whose drug and alcohol testing rules apply to the majority of the covered employees in your organization. The concerned DOT agency uses its applicable procedures for considering requests for waivers.

(2) Before taking action on a waiver request, the concerned DOT agency coordinates with other DOT agencies that regulate the employer's other covered employees.

(3) The concerned DOT agency provides a written response to each employer that petitions for a waiver, setting forth the reasons for the agency's decision on the waiver request.

(c) Your request for a waiver must include, as a minimum, the following elements:

(1) Information about your organization:

(i) Your determination that standing employees down is necessary for safety in your organization and a statement of your basis for it, including any data on safety problems or incidents that could have been prevented if a stand-down procedure had been in place;

(ii) Data showing the number of confirmed laboratory positive, adulterated, and substituted test results for your employees over the two calendar years preceding your waiver request, and the number and percentage of those test results that were verified positive, adulterated, or substituted by the MRO;

(iii) Information about the work situation of the employees subject to stand-down, including a description of the size and organization of the unit(s) in which the employees work, the process through which employees will be informed of the stand-down, whether there is an in-house MRO, and whether your organization has a medical disqualification or stand-down policy for employees in situations other than drug and alcohol testing; and

(iv) A statement of which DOT agencies regulate your employees.

(2) Your proposed written company policy concerning stand-down, which must include the following elements:

(i) Your assurance that you will distribute copies of your written policy to all employees that it covers;

(ii) Your means of ensuring that no information about the confirmed positive, adulterated, or substituted test result or the reason for the employee's temporary removal from performance of safety-sensitive functions becomes available, directly or indirectly, to anyone in your organization (or subsequently to another employer) other than the employee, the MRO and the DER;

(iii) Your means of ensuring that all covered employees in a particular job category in your organization are treated the same way with respect to stand-down;

(iv) Your means of ensuring that a covered employee will be subject to stand-down only with respect to the actual performance of safety-sensitive duties;

(v) Your means of ensuring that you will not take any action adversely affecting the employee's pay and benefits pending the completion of the MRO's verification process. This includes continuing to pay the employee during the period of the stand-down in the same way you would have paid him or her had he or she not been stood down;

(vi) Your means of ensuring that the verification process will commence no later than the time an employee is temporarily removed from the performance of safety-sensitive functions and that the period of stand-down for any employee will not exceed five days, unless you are informed in writing by the MRO that a longer period is needed to complete the verification process; and

(vii) Your means of ensuring that, in the event that the MRO verifies the test negative or cancels it—

(A) You return the employee immediately to the performance of safety-sensitive duties;

(B) The employee suffers no adverse personnel or financial consequences as a result; and

(C) You maintain no individually identifiable record that the employee had a confirmed laboratory positive, adulterated, or substituted test result (*i.e.*, you maintain a record of the test only as a negative or cancelled test).

(d) The Administrator of the concerned DOT agency, or his or her designee, may grant a waiver request only if he or she determines that, in the context of your organization, there is a high probability that the procedures you propose will effectively enhance safety and protect the interests of employees in fairness and confidentiality.

(1) The Administrator, or his or her designee, may impose any conditions he or she deems appropriate on the grant of a waiver.

(2) The Administrator, or his or her designee, may immediately suspend or revoke the waiver if he or she determines that you have failed to protect effectively the interests of employees in fairness and confidentiality, that you have failed to comply with the requirements of this section, or that you

have failed to comply with any other conditions the DOT agency has attached to the waiver.

(e) You must not stand employees down in the absence of a waiver, or inconsistent with the terms of your waiver. If you do, you are in violation of this part and DOT agency drug testing regulations, and you are subject to enforcement action by the DOT agency just as you are for other violations of this part and DOT agency rules.

§ 40.23 What actions do employers take after receiving verified test results?

(a) As an employer who receives a verified positive drug test result, you must immediately remove the employee involved from performing safety-sensitive functions. You must take this action upon receiving the initial report of the verified positive test result. Do not wait to receive the written report or the result of a split specimen test.

(b) As an employer who receives a verified adulterated or substituted drug test result, you must consider this a refusal to test and immediately remove the employee involved from performing safety-sensitive functions. You must take this action on receiving the initial report of the verified adulterated or substituted test result. Do not wait to receive the written report or the result of a split specimen test.

(c) As an employer who receives an alcohol test result of 0.04 or higher, you must immediately remove the employee involved from performing safety-sensitive functions. If you receive an alcohol test result of 0.02–0.039, you must temporarily remove the employee involved from performing safety-sensitive functions, as provided in applicable DOT agency regulations. Do not wait to receive the written report of the result of the test.

(d) As an employer, when an employee has a verified positive, adulterated, or substituted test result, or has otherwise violated a DOT agency drug and alcohol regulation, you must not return the employee to the performance of safety-sensitive functions until or unless the employee successfully completes the return-to-duty process of Subpart O of this part.

(e) As an employer who receives a drug test result indicating that the employee's specimen was dilute, take action as provided in § 40.197.

(f) As an employer who receives a drug test result indicating that the employee's urine specimen test was cancelled because it was invalid and that a second collection must take place under direct observation—

(1) You must immediately direct the employee to provide a new specimen under direct observation.

(2) You must not attach consequences to the finding that the test was invalid other than collecting a new specimen under direct observation.

(3) You must not give any advance notice of this test requirement to the employee.

(4) You must instruct the collector to note on the CCF the same reason (*e.g.* random test, post-accident test) as for the original collection.

(5) You must ensure that the collector conducts the collection under direct observation.

(g) As an employer who receives a cancelled test result when a negative result is required (*e.g.*, pre-employment, return-to-duty, or follow-up test), you must direct the employee to provide another specimen immediately.

(h) As an employer, you may also be required to take additional actions required by DOT agency regulations (*e.g.*, FAA rules require some positive drug tests to be reported to the Federal Air Surgeon).

(i) As an employer, you must not alter a drug or alcohol test result transmitted to you by an MRO, BAT, or C/TPA.

[65 FR 79526, Dec. 19, 2000, as amended at 71 FR 49384, Aug. 23, 2006; 73 FR 35970, June 25, 2008]

§ 40.25 Must an employer check on the drug and alcohol testing record of employees it is intending to use to perform safety-sensitive duties?

(a) Yes, as an employer, you must, after obtaining an employee's written consent, request the information about the employee listed in paragraph (b) of this section. This requirement applies only to employees seeking to begin performing safety-sensitive duties for you for the first time (*i.e.*, a new hire,

an employee transfers into a safety-sensitive position). If the employee refuses to provide this written consent, you must not permit the employee to perform safety-sensitive functions.

(b) You must request the information listed in this paragraph (b) from DOT-regulated employers who have employed the employee during any period during the two years before the date of the employee's application or transfer:

(1) Alcohol tests with a result of 0.04 or higher alcohol concentration;

(2) Verified positive drug tests;

(3) Refusals to be tested (including verified adulterated or substituted drug test results);

(4) Other violations of DOT agency drug and alcohol testing regulations; and

(5) With respect to any employee who violated a DOT drug and alcohol regulation, documentation of the employee's successful completion of DOT return-to-duty requirements (including follow-up tests). If the previous employer does not have information about the return-do-duty process (*e.g.*, an employer who did not hire an employee who tested positive on a pre-employment test), you must seek to obtain this information from the employee.

(c) The information obtained from a previous employer includes any drug or alcohol test information obtained from previous employers under this section or other applicable DOT agency regulations.

(d) If feasible, you must obtain and review this information before the employee first performs safety-sensitive functions. If this is not feasible, you must obtain and review the information as soon as possible. However, you must not permit the employee to perform safety-sensitive functions after 30 days from the date on which the employee first performed safety-sensitive functions, unless you have obtained or made and documented a good faith effort to obtain this information.

(e) If you obtain information that the employee has violated a DOT agency drug and alcohol regulation, you must not use the employee to perform safety-sensitive functions unless you also obtain information that the employee has subsequently complied with the return-to-duty requirements of Subpart O of this part and DOT agency drug and alcohol regulations.

(f) You must provide to each of the employers from whom you request information under paragraph (b) of this section written consent for the release of the information cited in paragraph (a) of this section.

(g) The release of information under this section must be in any written form (*e.g.*, fax, e-mail, letter) that ensures confidentiality. As the previous employer, you must maintain a written record of the information released, including the date, the party to whom it was released, and a summary of the information provided.

(h) If you are an employer from whom information is requested under paragraph (b) of this section, you must, after reviewing the employee's specific, written consent, immediately release the requested information to the employer making the inquiry.

(i) As the employer requesting the information required under this section, you must maintain a written, confidential record of the information you obtain or of the good faith efforts you made to obtain the information. You must retain this information for three years from the date of the employee's first performance of safety-sensitive duties for you.

(j) As the employer, you must also ask the employee whether he or she has tested positive, or refused to test, on any pre-employment drug or alcohol test administered by an employer to which the employee applied for, but did not obtain, safety-sensitive transportation work covered by DOT agency drug and alcohol testing rules during the past two years. If the employee admits that he or she had a positive test or a refusal to test, you must not use the employee to perform safety-sensitive functions for you, until and unless the employee documents successful completion of the return-to-duty process (see paragraphs (b)(5) and (e) of this section).

§ 40.26 What form must an employer use to report Management Information System (MIS) data to a DOT agency?

As an employer, when you are required to report MIS data to a DOT

agency, you must use the form and instructions at appendix H to part 40. You must submit the MIS report in accordance with rule requirements (*e.g.*, dates for submission; selection of companies required to submit, and method of reporting) established by the DOT agency regulating your operation.

[68 FR 43952, July 25, 2003]

§ 40.27 May an employer require an employee to sign a consent or release in connection with the DOT drug and alcohol testing program?

No, as an employer, you must not require an employee to sign a consent, release, waiver of liability, or indemnification agreement with respect to any part of the drug or alcohol testing process covered by this part (including, but not limited to, collections, laboratory testing, MRO and SAP services).

[66 FR 41950, Aug. 9, 2001]

§ 40.29 Where is other information on employer responsibilities found in this regulation?

You can find other information on the responsibilities of employers in the following sections of this part:

§ 40.3—Definition.
§ 40.35—Information about DERs that employers must provide collectors.
§ 40.45—Modifying CCFs, Use of foreign-language CCFs.
§ 40.47—Use of non-Federal forms for DOT tests or Federal CCFs for non-DOT tests.
§ 40.67—Requirements for direct observation.
§§ 40.103–40.105—Blind specimen requirements.
§ 40. 173—Responsibility to ensure test of split specimen.
§ 40.193—Action in ''shy bladder'' situations.
§ 40.197—Actions following report of a dilute specimen.
§ 40.207—Actions following a report of a cancelled drug test.
§ 40.209—Actions following and consequences of non-fatal flaws in drug tests.
§ 40.215—Information about DERs that employers must provide BATs and STTs.
§ 40.225—Modifying ATFs; use of foreign-language ATFs.
§ 40.227—Use of non-DOT forms for DOT tests or DOT ATFs for non-DOT tests.
§ 40.235 (c) and (d)—responsibility to follow instructions for ASDs.
§ 40.255 (b)—receipt and storage of alcohol test information.
§ 40.265 (c)–(e)—actions in ''shy lung'' situations.
§ 40.267—Cancellation of alcohol tests.
§ 40.271—Actions in ''correctable flaw'' situations in alcohol tests.
§ 40.273—Actions following cancelled tests in alcohol tests.
§ 40.275—Actions in ''non-fatal flaw'' situations in alcohol tests.
§§ 40.287–40.289—Responsibilities concerning SAP services.
§§ 40.295–40.297—Prohibition on seeking second SAP evaluation or changing SAP recommendation.
§ 40.303—Responsibilities concerning aftercare recommendations.
§ 40.305—Responsibilities concerning return-to-duty decision.
§ 40.309—Responsibilities concerning follow-up tests.
§ 40.321—General confidentiality requirement.
§ 40.323—Release of confidential information in litigation.
§ 40.331—Other circumstances for the release of confidential information.
§ 40.333—Record retention requirements.
§ 40.345—Choice of who reports drug testing information to employers.

[65 FR 79526, Dec. 19, 2000. Redesignated at 66 FR 41950, Aug. 9, 2001]

Subpart C—Urine Collection Personnel

§ 40.31 Who may collect urine specimens for DOT drug testing?

(a) Collectors meeting the requirements of this subpart are the only persons authorized to collect urine specimens for DOT drug testing.

(b) A collector must meet training requirements of § 40.33.

(c) As the immediate supervisor of an employee being tested, you may not act as the collector when that employee is tested, unless no other collector is available and you are permitted to do so under DOT agency drug and alcohol regulations.

(d) You must not act as the collector for the employee being tested if you work for a HHS-certified laboratory (*e.g.*, as a technician or accessioner) and could link the employee with a urine specimen, drug testing result, or laboratory report.

§ 40.33 What training requirements must a collector meet?

To be permitted to act as a collector in the DOT drug testing program, you must meet each of the requirements of this section:

(a) *Basic information.* You must be knowledgeable about this part, the current ''DOT Urine Specimen Collection Procedures Guidelines,'' and DOT agency regulations applicable to the employers for whom you perform collections, and you must keep current on any changes to these materials. The DOT Urine Specimen Collection Procedures Guidelines document is available from ODAPC (Department of Transportation, 1200 New Jersey Avenue, SE., Washington DC, 20590, 202–366–3784, or on the ODAPC web site (*http://www.dot.gov/ost/dapc*).

(b) *Qualification training.* You must receive qualification training meeting the requirements of this paragraph. Qualification training must provide instruction on the following subjects:

(1) All steps necessary to complete a collection correctly and the proper completion and transmission of the CCF;

(2) ''Problem'' collections (*e.g.,* situations like ''shy bladder'' and attempts to tamper with a specimen);

(3) Fatal flaws, correctable flaws, and how to correct problems in collections; and

(4) The collector's responsibility for maintaining the integrity of the collection process, ensuring the privacy of employees being tested, ensuring the security of the specimen, and avoiding conduct or statements that could be viewed as offensive or inappropriate;

(c) *Initial Proficiency Demonstration.* Following your completion of qualification training under paragraph (b) of this section, you must demonstrate proficiency in collections under this part by completing five consecutive error-free mock collections.

(1) The five mock collections must include two uneventful collection scenarios, one insufficient quantity of urine scenario, one temperature out of range scenario, and one scenario in which the employee refuses to sign the CCF and initial the specimen bottle tamper-evident seal.

(2) Another person must monitor and evaluate your performance, in person or by a means that provides real-time observation and interaction between the instructor and trainee, and attest in writing that the mock collections are ''error-free.'' This person must be a qualified collector who has demonstrated necessary knowledge, skills, and abilities by—

(i) Regularly conducting DOT drug test collections for a period of at least a year;

(ii) Conducting collector training under this part for a year; or

(iii) Successfully completing a ''train the trainer'' course.

(d) *Schedule for qualification training and initial proficiency demonstration.* The following is the schedule for qualification training and the initial proficiency demonstration you must meet:

(1) If you became a collector before August 1, 2001, and you have already met the requirements of paragraphs (b) and (c) of this section, you do not have to meet them again.

(2) If you became a collector before August 1, 2001, and have yet to meet the requirements of paragraphs (b) and (c) of this section, you must do so no later than January 31, 2003.

(3) If you become a collector on or after August 1, 2001, you must meet the requirements of paragraphs (b) and (c) of this section before you begin to perform collector functions.

(e) *Refresher training.* No less frequently than every five years from the date on which you satisfactorily complete the requirements of paragraphs (b) and (c) of this section, you must complete refresher training that meets all the requirements of paragraphs (b) and (c) of this section.

(f) *Error Correction Training.* If you make a mistake in the collection process that causes a test to be cancelled (*i.e.,* a fatal or uncorrected flaw), you must undergo error correction training. This training must occur within 30 days of the date you are notified of the error that led to the need for retraining.

(1) Error correction training must be provided and your proficiency documented in writing by a person who meets the requirements of paragraph (c)(2) of this section.

(2) Error correction training is required to cover only the subject matter area(s) in which the error that caused the test to be cancelled occurred.

(3) As part of the error correction training, you must demonstrate your

proficiency in the collection procedures of this part by completing three consecutive error-free mock collections. The mock collections must include one uneventful scenario and two scenarios related to the area(s) in which your error(s) occurred. The person providing the training must monitor and evaluate your performance and attest in writing that the mock collections were ''error-free.''

(g) *Documentation.* You must maintain documentation showing that you currently meet all requirements of this section. You must provide this documentation on request to DOT agency representatives and to employers and C/TPAs who are using or negotiating to use your services.

[65 FR 79526, Dec 19, 2000; 66 FR 3885, Jan. 17, 2001, as amended at 66 FR 41950, Aug. 9, 2001]

§ 40.35 What information about the DER must employers provide to collectors?

As an employer, you must provide to collectors the name and telephone number of the appropriate DER (and C/TPA, where applicable) to contact about any problems or issues that may arise during the testing process.

§ 40.37 Where is other information on the role of collectors found in this regulation?

You can find other information on the role and functions of collectors in the following sections of this part:

§ 40.3—Definition.
§ 40.43—Steps to prepare and secure collection sites.
§§ 40.45–40.47—Use of CCF.
§§ 40.49–40.51—Use of collection kit and shipping materials.
§§ 40.61–40.63—Preliminary steps in collections.
§ 40.65—Role in checking specimens.
§ 40.67—Role in directly observed collections.
§ 40.69—Role in monitored collections.
§ 40.71—Role in split specimen collections.
§ 40.73—Chain of custody completion and finishing the collection process.
§ 40.103—Processing blind specimens.
§ 40.191—Action in case of refusals to take test.
§ 40.193—Action in ''shy bladder'' situations.
§ 40.199–40.205—Collector errors in tests, effects, and means of correction.

Subpart D—Collection Sites, Forms, Equipment and Supplies Used in DOT Urine Collections

§ 40.41 Where does a urine collection for a DOT drug test take place?

(a) A urine collection for a DOT drug test must take place in a collection site meeting the requirements of this section.

(b) If you are operating a collection site, you must ensure that it meets the security requirements of § 40.43.

(c) If you are operating a collection site, you must have all necessary personnel, materials, equipment, facilities and supervision to provide for the collection, temporary storage, and shipping of urine specimens to a laboratory, and a suitable clean surface for writing.

(d) Your collection site must include a facility for urination described in either paragraph (e) or paragraph (f) of this section.

(e) The first, and preferred, type of facility for urination that a collection site may include is a single-toilet room, having a full-length privacy door, within which urination can occur.

(1) No one but the employee may be present in the room during the collection, except for the observer in the event of a directly observed collection.

(2) You must have a source of water for washing hands, that, if practicable, should be external to the closed room where urination occurs. If an external source is not available, you may meet this requirement by securing all sources of water and other substances that could be used for adulteration and substitution (*e.g.*, water faucets, soap dispensers) and providing moist towelettes outside the closed room.

(f) The second type of facility for urination that a collection site may include is a multistall restroom.

(1) Such a site must provide substantial visual privacy (*e.g.*, a toilet stall with a partial-length door) and meet all other applicable requirements of this section.

(2) If you use a multi-stall restroom, you must either—

(i) Secure all sources of water and other substances that could be used for

adulteration and substitution (*e.g.*, water faucets, soap dispensers) and place bluing agent in all toilets or secure the toilets to prevent access; or

(ii) Conduct all collections in the facility as monitored collections (see § 40.69 for procedures). This is the only circumstance in which you may conduct a monitored collection.

(3) No one but the employee may be present in the multistall restroom during the collection, except for the monitor in the event of a monitored collection or the observer in the event of a directly observed collection.

(g) A collection site may be in a medical facility, a mobile facility (*e.g.*, a van), a dedicated collection facility, or any other location meeting the requirements of this section.

§ 40.43 What steps must operators of collection sites take to protect the security and integrity of urine collections?

(a) Collectors and operators of collection sites must take the steps listed in this section to prevent unauthorized access that could compromise the integrity of collections.

(b) As a collector, you must do the following before each collection to deter tampering with specimens:

(1) Secure any water sources or otherwise make them unavailable to employees (*e.g.*, turn off water inlet, tape handles to prevent opening faucets);

(2) Ensure that the water in the toilet is blue;

(3) Ensure that no soap, disinfectants, cleaning agents, or other possible adulterants are present;

(4) Inspect the site to ensure that no foreign or unauthorized substances are present;

(5) Tape or otherwise secure shut any movable toilet tank top, or put bluing in the tank;

(6) Ensure that undetected access (*e.g.*, through a door not in your view) is not possible;

(7) Secure areas and items (*e.g.*, ledges, trash receptacles, paper towel holders, under-sink areas) that appear suitable for concealing contaminants; and

(8) Recheck items in paragraphs (b)(1) through (7) of this section following each collection to ensure the site's continued integrity.

(c) If the collection site uses a facility normally used for other purposes, like a public rest room or hospital examining room, you must, as a collector, also ensure before the collection that:

(1) Access to collection materials and specimens is effectively restricted; and

(2) The facility is secured against access during the procedure to ensure privacy to the employee and prevent distraction of the collector. Limited-access signs must be posted.

(d) As a collector, you must take the following additional steps to ensure security during the collection process:

(1) To avoid distraction that could compromise security, you are limited to conducting a collection for only one employee at a time. However, during the time one employee is in the period for drinking fluids in a ''shy bladder'' situation (see § 40.193(b)), you may conduct a collection for another employee.

(2) To the greatest extent you can, keep an employee's collection container within view of both you and the employee between the time the employee has urinated and the specimen is sealed.

(3) Ensure you are the only person in addition to the employee who handles the specimen before it is poured into the bottles and sealed with tamper-evident seals.

(4) In the time between when the employee gives you the specimen and when you seal the specimen, remain within the collection site.

(5) Maintain personal control over each specimen and CCF throughout the collection process.

(e) If you are operating a collection site, you must implement a policy and procedures to prevent unauthorized personnel from entering any part of the site in which urine specimens are collected or stored.

(1) Only employees being tested, collectors and other collection site workers, DERs, employee and employer representatives authorized by the employer (*e.g.*, employer policy, collective bargaining agreement), and DOT agency representatives are authorized persons for purposes of this paragraph (e).

(2) Except for the observer in a directly observed collection or the monitor in the case of a monitored collection, you must not permit anyone to enter the urination facility in which employees provide specimens.

(3) You must ensure that all authorized persons are under the supervision of a collector at all times when permitted into the site.

(4) You or the collector may remove any person who obstructs, interferes with, or causes a delay in the collection process.

(f) If you are operating a collection site, you must minimize the number of persons handling specimens.

§ 40.45 What form is used to document a DOT urine collection?

(a) The Federal Drug Testing Custody and Control Form (CCF) must be used to document every urine collection required by the DOT drug testing program. The CCF must be a five-part carbonless manifold form. You may view this form on the Department's web site (*http://www.dot.gov/ost/dapc*) or the HHS web site (*http://www.workplace.samhsa.gov*).

(b) You must not use a non-Federal form or an expired Federal form to conduct a DOT urine collection. As a laboratory, C/TPA or other party that provides CCFs to employers, collection sites, or other customers, you must not provide copies of an expired Federal form to these participants. You must also affirmatively notify these participants that they must not use an expired Federal form (e.g., that beginning August 1, 2001, they may not use the old 7-part Federal CCF for DOT urine collections).

(c) As a participant in the DOT drug testing program, you are not permitted to modify or revise the CCF except as follows:

(1) You may include, in the area outside the border of the form, other information needed for billing or other purposes necessary to the collection process.

(2) The CCF must include the names, addresses, telephone numbers and fax numbers of the employer and the MRO, which may be preprinted, typed, or handwritten. The MRO information must include the specific physician's name and address, as opposed to only a generic clinic, health care organization, or company name. This information is required, and it is prohibited for an employer, collector, service agent or any other party to omit it. In addition, a C/TPA's name, address, fax number, and telephone number may be included, but is not required. The employer may use a C/TPA's address in place of its own, but must continue to include its name, telephone number, and fax number.

(3) As an employer, you may add the name of the DOT agency under whose authority the test occurred as part of the employer information.

(4) As a collector, you may use a CCF with your name, address, telephone number, and fax number preprinted, but under no circumstances may you sign the form before the collection event.

(d) Under no circumstances may the CCF transmit personal identifying information about an employee (other than a social security number (SSN) or other employee identification (ID) number) to a laboratory.

(e) As an employer, you may use an equivalent foreign-language version of the CCF approved by ODAPC. You may use such a non-English language form only in a situation where both the employee and collector understand and can use the form in that language.

[65 FR 79526, Dec. 19, 2000, as amended at 66 FR 41950, Aug. 9, 2001]

§ 40.47 May employers use the CCF for non-Federal collections or non-Federal forms for DOT collections?

(a) No, as an employer, you are prohibited from using the CCF for non-Federal urine collections. You are also prohibited from using non-Federal forms for DOT urine collections. Doing either subjects you to enforcement action under DOT agency regulations.

(b) (1) In the rare case where the collector, either by mistake or as the only means to conduct a test under difficult circumstances (*e.g.,* post-accident or reasonable suspicion test with insufficient time to obtain the CCF), uses a non-Federal form for a DOT collection, the use of a non-Federal form does not present a reason for the laboratory to

reject the specimen for testing or for an MRO to cancel the result.

(2) The use of the non-Federal form is a ''correctable flaw.'' As an MRO, to correct the problem you must follow the procedures of § 40.205(b)(2).

[65 FR 79526, Dec. 19, 2000, as amended at 66 FR 41950, Aug. 9, 2001]

§ 40.49 What materials are used to collect urine specimens?

For each DOT drug test, you must use a collection kit meeting the requirements of Appendix A of this part.

§ 40.51 What materials are used to send urine specimens to the laboratory?

(a) Except as provided in paragraph (b) of this section, you must use a shipping container that adequately protects the specimen bottles from shipment damage in the transport of specimens from the collection site to the laboratory.

(b) You are not required to use a shipping container if a laboratory courier hand-delivers the specimens from the collection site to the laboratory.

Subpart E—Urine Specimen Collections

§ 40.61 What are the preliminary steps in the collection process?

As the collector, you must take the following steps before actually beginning a collection:

(a) When a specific time for an employee's test has been scheduled, or the collection site is at the employee's work site, and the employee does not appear at the collection site at the scheduled time, contact the DER to determine the appropriate interval within which the DER has determined the employee is authorized to arrive. If the employee's arrival is delayed beyond that time, you must notify the DER that the employee has not reported for testing. In a situation where a C/TPA has notified an owner/operator or other individual employee to report for testing and the employee does not appear, the C/TPA must notify the employee that he or she has refused to test (see § 40.191(a)(1)).

(b) Ensure that, when the employee enters the collection site, you begin the testing process without undue delay. For example, you must not wait because the employee says he or she is not ready or is unable to urinate or because an authorized employer or employee representative is delayed in arriving.

(1) If the employee is also going to take a DOT alcohol test, you must, to the greatest extent practicable, ensure that the alcohol test is completed before the urine collection process begins.

Example to Paragraph (b)(1)*:* An employee enters the test site for both a drug and an alcohol test. Normally, the collector would wait until the BAT had completed the alcohol test process before beginning the drug test process. However, there are some situations in which an exception to this normal practice would be reasonable. One such situation might be if several people were waiting for the BAT to conduct alcohol tests, but a drug testing collector in the same facility were free. Someone waiting might be able to complete a drug test without unduly delaying his or her alcohol test. Collectors and BATs should work together, however, to ensure that post-accident and reasonable suspicion alcohol tests happen as soon as possible (*e.g.*, by moving the employee to the head of the line for alcohol tests).

(2) If the employee needs medical attention (*e.g.*, an injured employee in an emergency medical facility who is required to have a post-accident test), do not delay this treatment to collect a specimen.

(3) You must not collect, by catheterization or other means, urine from an unconscious employee to conduct a drug test under this part. Nor may you catheterize a conscious employee. However, you must inform an employee who normally voids through self-catheterization that the employee is required to provide a specimen in that manner.

(4) If, as an employee, you normally void through self-catheterization, and decline to do so, this constitutes a refusal to test.

(c) Require the employee to provide positive identification. You must see a photo ID issued by the employer (other than in the case of an owner-operator or other self-employed individual) or a Federal, state, or local government (*e.g.*, a driver's license). You may not

accept faxes or photocopies of identification. Positive identification by an employer representative (not a coworker or another employee being tested) is also acceptable. If the employee cannot produce positive identification, you must contact a DER to verify the identity of the employee.

(d) If the employee asks, provide your identification to the employee. Your identification must include your name and your employer's name, but does not have to include your picture, address, or telephone number.

(e) Explain the basic collection procedure to the employee, including showing the employee the instructions on the back of the CCF.

(f) Direct the employee to remove outer clothing (*e.g.*, coveralls, jacket, coat, hat) that could be used to conceal items or substances that could be used to tamper with a specimen. You must also direct the employee to leave these garments and any briefcase, purse, or other personal belongings with you or in a mutually agreeable location. You must advise the employee that failure to comply with your directions constitutes a refusal to test.

(1) If the employee asks for a receipt for any belongings left with you, you must provide one.

(2) You must allow the employee to keep his or her wallet.

(3) You must not ask the employee to remove other clothing (*e.g.*, shirts, pants, dresses, underwear), to remove all clothing, or to change into a hospital or examination gown (unless the urine collection is being accomplished simultaneously with a DOT agency-authorized medical examination).

(4) You must direct the employee to empty his or her pockets and display the items in them to ensure that no items are present which could be used to adulterate the specimen. If nothing is there that can be used to adulterate a specimen, the employee can place the items back into his or her pockets. As the employee, you must allow the collector to make this observation.

(5) If, in your duties under paragraph (f)(4) of this section, you find any material that could be used to tamper with a specimen, you must:

(i) Determine if the material appears to be brought to the collection site with the intent to alter the specimen, and, if it is, conduct a directly observed collection using direct observation procedures (see § 40.67); or

(ii) Determine if the material appears to be inadvertently brought to the collection site (*e.g.*, eye drops), secure and maintain it until the collection process is completed and conduct a normal (*i.e.*, unobserved) collection.

(g) You must instruct the employee not to list medications that he or she is currently taking on the CCF. (The employee may make notes of medications on the back of the employee copy of the form for his or her own convenience, but these notes must not be transmitted to anyone else.)

§ 40.63 What steps does the collector take in the collection process before the employee provides a urine specimen?

As the collector, you must take the following steps before the employee provides the urine specimen:

(a) Complete Step 1 of the CCF.

(b) Instruct the employee to wash and dry his or her hands at this time. You must tell the employee not to wash his or her hands again until after delivering the specimen to you. You must not give the employee any further access to water or other materials that could be used to adulterate or dilute a specimen.

(c) Select, or allow the employee to select, an individually wrapped or sealed collection container from collection kit materials. Either you or the employee, with both of you present, must unwrap or break the seal of the collection container. You must not unwrap or break the seal on any specimen bottle at this time. You must not allow the employee to take anything from the collection kit into the room used for urination except the collection container.

(d) Direct the employee to go into the room used for urination, provide a specimen of at least 45 mL, not flush the toilet, and return to you with the specimen as soon as the employee has completed the void.

(1) Except in the case of an observed or a monitored collection (see §§ 40.67 and 40.69), neither you nor anyone else

may go into the room with the employee.

(2) As the collector, you may set a reasonable time limit for voiding.

(e) You must pay careful attention to the employee during the entire collection process to note any conduct that clearly indicates an attempt to tamper with a specimen (*e.g.*, substitute urine in plain view or an attempt to bring into the collection site an adulterant or urine substitute). If you detect such conduct, you must require that a collection take place immediately under direct observation (see § 40.67) and note the conduct and the fact that the collection was observed in the ''Remarks'' line of the CCF (Step 2). You must also, as soon as possible, inform the DER and collection site supervisor that a collection took place under direct observation and the reason for doing so.

§ 40.65 What does the collector check for when the employee presents a specimen?

As a collector, you must check the following when the employee gives the collection container to you:

(a) *Sufficiency of specimen*. You must check to ensure that the specimen contains at least 45 mL of urine.

(1) If it does not, you must follow ''shy bladder'' procedures (see § 40.193(b)).

(2) When you follow ''shy bladder'' procedures, you must discard the original specimen, unless another problem (*i.e.*, temperature out of range, signs of tampering) also exists.

(3) You are never permitted to combine urine collected from separate voids to create a specimen.

(4) You must discard any excess urine.

(b) *Temperature*. You must check the temperature of the specimen no later than four minutes after the employee has given you the specimen.

(1) The acceptable temperature range is 32–38 °C/90–100 °F.

(2) You must determine the temperature of the specimen by reading the temperature strip attached to the collection container.

(3) If the specimen temperature is within the acceptable range, you must mark the ''Yes'' box on the CCF (Step 2).

(4) If the specimen temperature is outside the acceptable range, you must mark the ''No'' box and enter in the ''Remarks'' line (Step 2) your findings about the temperature.

(5) If the specimen temperature is outside the acceptable range, you must immediately conduct a new collection using direct observation procedures (see § 40.67).

(6) In a case where a specimen is collected under direct observation because of the temperature being out of range, you must process both the original specimen and the specimen collected using direct observation and send the two sets of specimens to the laboratory. This is true even in a case in which the original specimen has insufficient volume but the temperature is out of range. You must also, as soon as possible, inform the DER and collection site supervisor that a collection took place under direct observation and the reason for doing so.

(7) In a case where the employee refuses to provide another specimen (see § 40.191(a)(3)) or refuses to provide another specimen under direct observation (see § 40.191(a)(4)), you must notify the DER. As soon as you have notified the DER, you must discard any specimen the employee has provided previously during the collection procedure.

(c) *Signs of tampering*. You must inspect the specimen for unusual color, presence of foreign objects or material, or other signs of tampering (*e.g.*, if you notice any unusual odor).

(1) If it is apparent from this inspection that the employee has tampered with the specimen (*e.g.*, blue dye in the specimen, excessive foaming when shaken, smell of bleach), you must immediately conduct a new collection using direct observation procedures (see § 40.67).

(2) In a case where a specimen is collected under direct observation because of showing signs of tampering, you must process both the original specimen and the specimen collected using direct observation and send the two sets of specimens to the laboratory. This is true even in a case in which the original specimen has insufficient volume but it shows signs of tampering.

You must also, as soon as possible, inform the DER and collection site supervisor that a collection took place under direct observation and the reason for doing so.

(3) In a case where the employee refuses to provide a specimen under direct observation (see § 40.191(a)(4)), you must discard any specimen the employee provided previously during the collection procedure. Then you must notify the DER as soon as practicable.

[65 FR 79526, Dec. 19, 2000, as amended at 66 FR 41950, Aug. 9, 2001]

§ 40.67 When and how is a directly observed collection conducted?

(a) As an employer, you must direct an immediate collection under direct observation with no advance notice to the employee, if:

(1) The laboratory reported to the MRO that a specimen is invalid, and the MRO reported to you that there was not an adequate medical explanation for the result;

(2) The MRO reported to you that the original positive, adulterated, or substituted result had to be cancelled because the test of the split specimen could not be performed; or

(3) The laboratory reported to the MRO that the specimen was negative-dilute with a creatinine concentration greater than or equal to 2 mg/dL but less than or equal to 5 mg/dL, and the MRO reported the specimen to you as negative-dilute and that a second collection must take place under direct observation (see § 40.197(b)(1)).

(b) As an employer, you may direct a collection under direct observation of an employee if the drug test is a return-to-duty test or a follow-up test.

(c) As a collector, you must immediately conduct a collection under direct observation if:

(1) You are directed by the DER to do so (see paragraphs (a) and (b) of this section); or

(2) You observed materials brought to the collection site or the employee's conduct clearly indicates an attempt to tamper with a specimen (see §§ 40.61(f)(5)(i) and 40.63(e)); or

(3) The temperature on the original specimen was out of range (see § 40.65(b)(5)); or (4) The original specimen appeared to have been tampered with (see § 40.65(c)(1)).

(d)(1) As the employer, you must explain to the employee the reason for a directly observed collection under paragraph (a) or (b) of this section.

(2) As the collector, you must explain to the employee the reason, if known, under this part for a directly observed collection under paragraphs (c)(1) through (3) of this section.

(e) As the collector, you must complete a new CCF for the directly observed collection.

(1) You must mark the ''reason for test'' block (Step 1) the same as for the first collection.

(2) You must check the ''Observed, (Enter Remark)'' box and enter the reason (see § 40.67(b)) in the ''Remarks'' line (Step 2).

(f) In a case where two sets of specimens are being sent to the laboratory because of suspected tampering with the specimen at the collection site, enter on the ''Remarks'' line of the CCF (Step 2) for each specimen a notation to this effect (*e.g.*, collection 1 of 2, or 2 of 2) and the specimen ID number of the other specimen.

(g) As the collector, you must ensure that the observer is the same gender as the employee. You must never permit an opposite gender person to act as the observer. The observer can be a different person from the collector and need not be a qualified collector.

(h) As the collector, if someone else is to observe the collection (*e.g.*, in order to ensure a same gender observer), you must verbally instruct that person to follow procedures at paragraphs (i) and (j) of this section. If you, the collector, are the observer, you too must follow these procedures.

(i) As the observer, you must request the employee to raise his or her shirt, blouse, or dress/skirt, as appropriate, above the waist; and lower clothing and underpants to show you, by turning around, that they do not have a prosthetic device. After you have determined that the employee does not have such a device, you may permit the employee to return clothing to its proper position for observed urination.

(j) As the observer, you must watch the employee urinate into the collection container. Specifically, you are to

watch the urine go from the employee's body into the collection container.

(k) As the observer but not the collector, you must not take the collection container from the employee, but you must observe the specimen as the employee takes it to the collector.

(l) As the collector, when someone else has acted as the observer, you must include the observer's name in the ''Remarks'' line of the CCF (Step 2).

(m) As the employee, if you decline to allow a directly observed collection required or permitted under this section to occur, this is a refusal to test.

(n) As the collector, when you learn that a directly observed collection should have been collected but was not, you must inform the employer that it must direct the employee to have an immediate recollection under direct observation.

[65 FR 79526, Dec. 19, 2000, as amended at 66 FR 41950, Aug. 9, 2001; 68 FR 31626, May 28, 2003; 69 FR 64867, Nov. 9, 2004; 73 FR 35970, June 25, 2008]

EFFECTIVE DATE NOTE: At 73 FR 35970, June 25, 2008, §40.67(b) was revised, effective August 25, 2008. At 73 FR 50223, August 26, 2008, the effective date was delayed until November 1, 2008. For the convenience of the user, the revised text is set forth as follows:

§ 40.67 When and how is a directly observed collection conducted?

* * * * *

(b) As an employer, you must direct a collection under direct observation of an employee if the drug test is a return-to-duty test or a follow-up test.

* * * * *

§ 40.69 How is a monitored collection conducted?

(a) As the collector, you must secure the room being used for the monitored collection so that no one except the employee and the monitor can enter it until after the collection has been completed.

(b) As the collector, you must ensure that the monitor is the same gender as the employee, unless the monitor is a medical professional (e.g., nurse, doctor, physician's assistant, technologist, or technician licensed or certified to practice in the jurisdiction in which the collection takes place). The monitor can be a different person from the collector and need not be a qualified collector.

(c) As the collector, if someone else is to monitor the collection (e.g., in order to ensure a same-gender monitor), you must verbally instruct that person to follow the procedures of paragraphs (d) and (e) of this section. If you, the collector, are the monitor, you must follow these procedures.

(d) As the monitor, you must not watch the employee urinate into the collection container. If you hear sounds or make other observations indicating an attempt to tamper with a specimen, there must be an additional collection under direct observation (see §§ 40.63(e), 40.65(c), and 40.67(b)).

(e) As the monitor, you must ensure that the employee takes the collection container directly to the collector as soon as the employee has exited the enclosure.

(f) As the collector, when someone else has acted as the monitor, you must note that person's name in the ''Remarks'' line of the CCF (Step 2).

(g) As the employee being tested, if you decline to permit a collection authorized under this section to be monitored, it is a refusal to test.

[65 FR 79526, Dec. 19, 2000, as amended at 66 FR 41951, Aug. 9, 2001]

§ 40.71 How does the collector prepare the specimens?

(a) All collections under DOT agency drug testing regulations must be split specimen collections.

(b) As the collector, you must take the following steps, in order, after the employee brings the urine specimen to you. You must take these steps in the presence of the employee.

(1) Check the box on the CCF (Step 2) indicating that this was a split specimen collection.

(2) You, not the employee, must first pour at least 30 mL of urine from the collection container into one specimen bottle, to be used for the primary specimen.

(3) You, not the employee, must then pour at least 15 mL of urine from the collection container into the second specimen bottle to be used for the split specimen.

(4) You, not the employee, must place and secure (*i.e.*, tighten or snap) the lids/caps on the bottles.

(5) You, not the employee, must seal the bottles by placing the tamper-evident bottle seals over the bottle caps/lids and down the sides of the bottles.

(6) You, not the employee, must then write the date on the tamper-evident bottle seals.

(7) You must then ensure that the employee initials the tamper-evident bottle seals for the purpose of certifying that the bottles contain the specimens he or she provided. If the employee fails or refuses to do so, you must note this in the ''Remarks'' line of the CCF (Step 2) and complete the collection process.

(8) You must discard any urine left over in the collection container after both specimen bottles have been appropriately filled and sealed. There is one exception to this requirement: you may use excess urine to conduct clinical tests (e.g., protein, glucose) if the collection was conducted in conjunction with a physical examination required by a DOT agency regulation. Neither you nor anyone else may conduct further testing (such as adulteration testing) on this excess urine and the employee has no legal right to demand that the excess urine be turned over to the employee.

[65 FR 79526, Dec. 19, 2000, as amended at 66 FR 41951, Aug. 9, 2001]

§ 40.73 How is the collection process completed?

(a) As the collector, you must do the following things to complete the collection process. You must complete the steps called for in paragraphs (a)(1) through (a)(7) of this section in the employee's presence.

(1) Direct the employee to read and sign the certification statement on Copy 2 (Step 5) of the CCF and provide date of birth, printed name, and day and evening contact telephone numbers. If the employee refuses to sign the CCF or to provide date of birth, printed name, or telephone numbers, you must note this in the ''Remarks'' line (Step 2) of the CCF, and complete the collection. If the employee refuses to fill out any information, you must, as a minimum, print the employee's name in the appropriate place.

(2) Complete the chain of custody on the CCF (Step 4) by printing your name (note: you may pre-print your name), recording the time and date of the collection, signing the statement, and entering the name of the delivery service transferring the specimen to the laboratory,

(3) Ensure that all copies of the CCF are legible and complete.

(4) Remove Copy 5 of the CCF and give it to the employee.

(5) Place the specimen bottles and Copy 1 of the CCF in the appropriate pouches of the plastic bag.

(6) Secure both pouches of the plastic bag.

(7) Advise the employee that he or she may leave the collection site.

(8) To prepare the sealed plastic bag containing the specimens and CCF for shipment you must:

(i) Place the sealed plastic bag in a shipping container (*e.g.*, standard courier box) designed to minimize the possibility of damage during shipment. (More than one sealed plastic bag can be placed into a single shipping container if you are doing multiple collections.)

(ii) Seal the container as appropriate.

(iii) If a laboratory courier hand-delivers the specimens from the collection site to the laboratory, prepare the sealed plastic bag for shipment as directed by the courier service.

(9) Send Copy 2 of the CCF to the MRO and Copy 4 to the DER. You must fax or otherwise transmit these copies to the MRO and DER within 24 hours or during the next business day. Keep Copy 3 for at least 30 days, unless otherwise specified by applicable DOT agency regulations.

(b) As a collector or collection site, you must ensure that each specimen you collect is shipped to a laboratory as quickly as possible, but in any case within 24 hours or during the next business day.

[65 FR 79526, Dec. 19, 2000, as amended at 71 FR 49384, Aug. 23, 2006]

Subpart F—Drug Testing Laboratories

§ 40.81 What laboratories may be used for DOT drug testing?

(a) As a drug testing laboratory located in the U.S., you are permitted to participate in DOT drug testing only if you are certified by HHS under the National Laboratory Certification Program (NLCP) for all testing required under this part.

(b) As a drug testing laboratory located in Canada or Mexico which is not certified by HHS under the NLCP, you are permitted to participate in DOT drug testing only if:

(1) The DOT, based on a written recommendation from HHS, has approved your laboratory as meeting HHS laboratory certification standards or deemed your laboratory fully equivalent to a laboratory meeting HHS laboratory certification standards for all testing required under this part; or

(2) The DOT, based on a written recommendation from HHS, has recognized a Canadian or Mexican certifying organization as having equivalent laboratory certification standards and procedures to those of HHS, and the Canadian or Mexican certifying organization has certified your laboratory under those equivalent standards and procedures.

(c) As a laboratory participating in the DOT drug testing program, you must comply with the requirements of this part. You must also comply with all applicable requirements of HHS in testing DOT specimens, whether or not the HHS requirements are explicitly stated in this part.

(d) If DOT determines that you are in noncompliance with this part, you could be subject to PIE proceedings under Subpart R of this part. If the Department issues a PIE with respect to you, you are ineligible to participate in the DOT drug testing program even if you continue to meet the requirements of paragraph (a) or (b) of this section.

§ 40.83 How do laboratories process incoming specimens?

As the laboratory, you must do the following when you receive a DOT specimen:

(a) You are authorized to receive only the laboratory copy of the CCF. You are not authorized to receive other copies of the CCF nor any copies of the alcohol testing form.

(b) You must comply with applicable provisions of the HHS Guidelines concerning accessioning and processing urine drug specimens.

(c) You must inspect each specimen and CCF for the following ''fatal flaws:''

(1) The specimen ID numbers on the specimen bottle and the CCF do not match;

(2) The specimen bottle seal is broken or shows evidence of tampering, unless a split specimen can be redesignated (see paragraph (h) of this section);

(3) The collector's printed name *and* signature are omitted from the CCF; and

(4) There is an insufficient amount of urine in the primary bottle for analysis, unless the specimens can be redesignated (see paragraph (h) of this section).

(d) When you find a specimen meeting the criteria of paragraph (c) of this section, you must document your findings and stop the testing process. Report the result in accordance with § 40.97(a)(3) .

(e) You must inspect each CCF for the presence of the collector's signature on the certification statement in Step 4 of the CCF. Upon finding that the signature is omitted, document the flaw and continue the testing process.

(1) In such a case, you must retain the specimen for a minimum of 5 business days from the date on which you initiated action to correct the flaw.

(2) You must then attempt to correct the flaw by following the procedures of § 40.205(b)(1).

(3) If the flaw is not corrected, report the result as rejected for testing in accordance with § 40.97(a)(3).

(f) If you determine that the specimen temperature was not checked and the ''Remarks'' line did not contain an entry regarding the temperature being outside of range, you must then attempt to correct the problem by following the procedures of § 40.208.

(1) In such a case, you must continue your efforts to correct the problem for

five business days, before you report the result.

(2) When you have obtained the correction, or five business days have elapsed, report the result in accordance with § 40.97(a).

(g) If you determine that a CCF that fails to meet the requirements of § 40.45(a) (e.g., a non-Federal form or an expired Federal form was used for the collection), you must attempt to correct the use of the improper form by following the procedures of § 40.205(b)(2).

(1) In such a case, you must retain the specimen for a minimum of 5 business days from the date on which you initiated action to correct the problem.

(2) If the problem(s) is not corrected, you must reject the test and report the result in accordance with § 40.97(a)(3).

(h) If the CCF is marked indicating that a split specimen collection was collected and if the split specimen does not accompany the primary, has leaked, or is otherwise unavailable for testing, you must still test the primary specimen and follow appropriate procedures outlined in § 40.175(b) regarding the unavailability of the split specimen for testing.

(1) The primary specimen and the split specimen can be redesignated (*i.e.*, Bottle B is redesignated as Bottle A, and vice-versa) if:

(i) The primary specimen appears to have leaked out of its sealed bottle and the laboratory believes a sufficient amount of urine exists in the split specimen to conduct all appropriate primary laboratory testing; or

(ii) The primary specimen is labeled as Bottle B, and the split specimen as Bottle A; or

(iii) The laboratory opens the split specimen instead of the primary specimen, the primary specimen remains sealed, and the laboratory believes a sufficient amount of urine exists in the split specimen to conduct all appropriate primary laboratory testing; or

(iv) The primary specimen seal is broken but the split specimen remains sealed and the laboratory believes a sufficient amount of urine exists in the split specimen to conduct all appropriate primary laboratory testing.

(2) In situations outlined in paragraph (g)(1) of this section, the laboratory shall mark through the ''A'' and write ''B,'' then initial and date the change. A corresponding change shall be made to the other bottle by marking through the ''B'' and writing ''A,'' and initialing and dating the change.

(i) A notation shall be made on Copy 1 of the CCF (Step 5a) and on any laboratory internal chain of custody documents, as appropriate, for any fatal or correctable flaw.

[65 FR 79526, Dec. 19, 2000, as amended at 66 FR 41951, Aug. 9, 2001; 71 FR 49384, Aug. 23, 2006; 73 FR 35970, June 25, 2008]

§ 40.85 What drugs do laboratories test for?

As a laboratory, you must test for the following five drugs or classes of drugs in a DOT drug test. You must not test ''DOT specimens'' for any other drugs.

(a) Marijuana metabolites.

(b) Cocaine metabolites.

(c) Amphetamines.

(d) Opiate metabolites.

(e) Phencyclidine (PCP).

§ 40.87 What are the cutoff concentrations for initial and confirmation tests?

(a) As a laboratory, you must use the cutoff concentrations displayed in the following table for initial and confirmation drug tests. All cutoff concentrations are expressed in nanograms per milliliter (ng/mL). The table follows:

Type of drug or metabolite	Initial test	Confirmation test
(1) Marijuana metabolites ..	50	
(i) Delta-9-tetrahydrocannabinol-9-carboxylic acid (THC).		15
(2) Cocaine metabolites (Benzoylecgonine).	300	150
(3) Phencyclidine (PCP)	25	25
(4) Amphetamines	1000	
(i) Amphetamine	.....	500
(ii) Methamphetamine	.....	500 (Specimen must also contain amphetamine at a concentration of greater than or equal to 200 ng/mL.)
(5) Opiate metabolites	2000	
(i) Codeine	.....	2000
(ii) Morphine	.....	2000

Type of drug or metabolite	Initial test	Confirmation test
(iii) 6-acetylmorphine (6–AM).	.....	10 (Test for 6–AM in the specimen. Conduct this test only when specimen contains morphine at a concentration greater than or equal to 2000 ng/mL.)

(b) On an initial drug test, you must report a result below the cutoff concentration as negative. If the result is at or above the cutoff concentration, you must conduct a confirmation test.

(c) On a confirmation drug test, you must report a result below the cutoff concentration as negative and a result at or above the cutoff concentration as confirmed positive.

(d) You must report quantitative values for morphine or codeine at 15,000 ng/mL or above.

§ 40.89 What is validity testing, and are laboratories required to conduct it?

(a) Specimen validity testing is the evaluation of the specimen to determine if it is consistent with normal human urine. The purpose of validity testing is to determine whether certain adulterants or foreign substances were added to the urine, if the urine was diluted, or if the specimen was substituted.

(b) As a laboratory, you must conduct validity testing.

[65 FR 79526, Dec. 19, 2000, as amended at 66 FR 41951, Aug. 9, 2001; 73 FR 35970, June 25, 2008]

§ 40.91 What validity tests must laboratories conduct on primary specimens?

As a laboratory, when you conduct validity testing under § 40.89, you must conduct it in accordance with the requirements of this section.

(a) You must determine the creatinine concentration on each primary specimen. You must also determine its specific gravity if you find the creatinine concentration to be less than 20 mg/dL.

(b) You must determine the pH of each primary specimen.

(c) You must perform one or more validity tests for oxidizing adulterants on each primary specimen.

(d) You must perform additional validity tests on the primary specimen when the following conditions are observed:

(1) Abnormal physical characteristics;

(2) Reactions or responses characteristic of an adulterant obtained during initial or confirmatory drug tests (*e.g.*, non-recovery of internal standards, unusual response); or

(3) Possible unidentified interfering substance or adulterant.

(e) If you determine that the specimen is invalid and HHS guidelines direct you to contact the MRO, you must contact the MRO and together decide if testing the primary specimen by another HHS certified laboratory would be useful in being able to report a positive or adulterated test result.

[65 FR 79526, Dec. 19, 2000, as amended at 69 FR 64867, Nov. 9, 2004]

§ 40.93 What criteria do laboratories use to establish that a specimen is dilute or substituted?

(a) As a laboratory, you must consider the primary specimen to be dilute when:

(1) The creatinine concentration is greater than or equal to 2 mg/dL but less than 20 mg/dL, and

(2) The specific gravity is greater than 1.0010 but less than 1.0030 on a single aliquot.

(b) As a laboratory, you must consider the primary specimen to be substituted when the creatinine concentration is less than 2 mg/dL and the specific gravity is less than or equal to 1.0010 or greater than or equal to 1.0200 on both the initial and confirmatory creatinine tests and on both the initial and confirmatory specific gravity tests on two separate aliquots.

[69 FR 64867, Nov. 9, 2004]

§ 40.95 What are the adulterant cutoff concentrations for initial and confirmation tests?

(a) As a laboratory, you must use the cutoff concentrations for the initial and confirmation adulterant testing as required by the HHS Mandatory Guidelines and you must use two separate

aliquots—one for the initial test and another for the confirmation test.

(b) As a laboratory, you must report results at or above the cutoffs (or for pH, at or above or below the values, as appropriate) as adulterated and provide the numerical value that supports the adulterated result.

[73 FR 35970, June 25, 2008]

§ 40.96 What criteria do laboratories use to establish that a specimen is invalid?

(a) As a laboratory, you must use the invalid test result criteria for the initial and confirmation testing as required by the HHS Mandatory Guidelines, and you must use two separate aliquots—one for the initial test and another for the confirmation test.

(b) As a laboratory, for a specimen having an invalid result for one of the reasons outlined in the HHS Mandatory Guidelines, you must contact the MRO to discuss whether sending the specimen to another HHS certified laboratory for testing would be useful in being able to report a positive or adulterated result.

(c) As a laboratory, you must report invalid results in accordance with the invalid test result criteria as required by the HHS Guidelines and provide the numerical value that supports the invalid result, where appropriate, such as pH.

(d) As a laboratory, you must report the reason a test result is invalid.

[73 FR 35970, June 25, 2008]

§ 40.97 What do laboratories report and how do they report it?

(a) As a laboratory, you must report the results for each primary specimen. The result of a primary specimen will fall into one of the following three categories. However, as a laboratory, you must report the actual results (and not the categories):

(1) Category 1: Negative Results. As a laboratory, when you find a specimen to be negative, you must report the test result as being one of the following, as appropriate:

(i) Negative, or

(ii) Negative-dilute, with numerical values for creatinine and specific gravity.

(2) Category 2: Non-negative Results. As a laboratory, when you find a specimen to be non-negative, you must report the test result as being one or more of the following, as appropriate:

(i) Positive, with drug(s)/metabolite(s) noted;

(ii) Positive-dilute, with drug(s)/ metabolite(s) noted, with numerical values for creatinine and specific gravity;

(iii) Adulterated, with adulterant(s) noted, with confirmatory test values (when applicable), and with remark(s);

(iv) Substituted, with confirmatory test values for creatinine and specific gravity; or

(v) Invalid result, with remark(s). Laboratories will report actual values for pH results.

(3) Category 3: Rejected for Testing. As a laboratory, when you reject a specimen for testing, you must report the result as being Rejected for Testing, with remark(s).

(b) As a laboratory, you must report laboratory results directly, and only, to the MRO at his or her place of business. You must not report results to or through the DER or a service agent (*e.g.*, C/TPA).

(1) Negative results: You must fax, courier, mail, or electronically transmit a legible image or copy of the fully-completed Copy 1 of the CCF which has been signed by the certifying scientist, or you may provide the laboratory results report electronically (*i.e.*, computer data file).

(i) If you elect to provide the laboratory results report, you must include the following elements, as a minimum, in the report format:

(A) Laboratory name and address;

(B) Employer's name (you may include I.D. or account number);

(C) Medical review officer's name;

(D) Specimen I.D. number;

(E) Donor's SSN or employee I.D. number, if provided;

(F) Reason for test, if provided;

(G) Collector's name and telephone number;

(H) Date of the collection;

(I) Date received at the laboratory;

(J) Date certifying scientist released the results;

(K) Certifying scientist's name;

(L) Results (e.g., positive, adulterated) as listed in paragraph (a) of this section; and

(M) Remarks section, with an explanation of any situation in which a correctable flaw has been corrected.

(ii) You may release the laboratory results report only after review and approval by the certifying scientist. It must reflect the same test result information as contained on the CCF signed by the certifying scientist. The information contained in the laboratory results report may not contain information that does not appear on the CCF.

(iii) The results report may be transmitted through any means that ensures accuracy and confidentiality. You, as the laboratory, together with the MRO, must ensure that the information is adequately protected from unauthorized access or release, both during transmission and in storage.

(2) Non-negative and Rejected for Testing results: You must fax, courier, mail, or electronically transmit a legible image or copy of the fully-completed Copy 1 of the CCF that has been signed by the certifying scientist. In addition, you may provide the electronic laboratory results report following the format and procedures set forth in paragraphs (b)(1)(i) and (ii) of this section.

(c) In transmitting laboratory results to the MRO, you, as the laboratory, together with the MRO, must ensure that the information is adequately protected from unauthorized access or release, both during transmission and in storage. If the results are provided by fax, the fax connection must have a fixed telephone number accessible only to authorized individuals.

(d) You must transmit test results to the MRO in a timely manner, preferably the same day that review by the certifying scientist is completed.

(e)(1) You must provide quantitative values for confirmed positive drug test results to the MRO when the MRO requests you to do so in writing. The MRO's request may be either a general request covering all such results you send to the MRO or a specific case-by-case request.

(2) You must provide the numerical values that support the adulterated (when applicable) or substituted result, without a request from the MRO.

(3) You must also provide to the MRO numerical values for creatinine and specific gravity for the negative-dilute test result, without a request from the MRO.

(f) You must provide quantitative values for confirmed opiate results for morphine or codeine at 15,000 ng/mL or above, even if the MRO has not requested quantitative values for the test result.

[65 FR 79526, Dec. 19, 2000, as amended at 66 FR 41951, Aug. 9, 2001; 68 FR 31626, May 28, 2003; 69 FR 64867, Nov. 9, 2004; 73 FR 35970, June 25, 2008]

§ 40.99 How long does the laboratory retain specimens after testing?

(a) As a laboratory testing the primary specimen, you must retain a specimen that was reported with positive, adulterated, substituted, or invalid results for a minimum of one year.

(b) You must keep such a specimen in secure, long-term, frozen storage in accordance with HHS requirements.

(c) Within the one-year period, the MRO, the employee, the employer, or a DOT agency may request in writing that you retain a specimen for an additional period of time (*e.g.*, for the purpose of preserving evidence for litigation or a safety investigation). If you receive such a request, you must comply with it. If you do not receive such a request, you may discard the specimen at the end of the year.

(d) If you have not sent the split specimen to another laboratory for testing, you must retain the split specimen for an employee's test for the same period of time that you retain the primary specimen and under the same storage conditions.

(e) As the laboratory testing the split specimen, you must meet the requirements of paragraphs (a) through (d) of this section with respect to the split specimen.

§ 40.101 What relationship may a laboratory have with an MRO?

(a) As a laboratory, you may not enter into any relationship with an MRO that creates a conflict of interest

or the appearance of a conflict of interest with the MRO's responsibilities for the employer. You may not derive any financial benefit by having an employer use a specific MRO.

(b) The following are examples of relationships between laboratories and MROs that the Department regards as creating conflicts of interest, or the appearance of such conflicts. This following list of examples is not intended to be exclusive or exhaustive:

(1) The laboratory employs an MRO who reviews test results produced by the laboratory;

(2) The laboratory has a contract or retainer with the MRO for the review of test results produced by the laboratory;

(3) The laboratory designates which MRO the employer is to use, gives the employer a slate of MROs from which to choose, or recommends certain MROs;

(4) The laboratory gives the employer a discount or other incentive to use a particular MRO;

(5) The laboratory has its place of business co-located with that of an MRO or MRO staff who review test results produced by the laboratory; or

(6) The laboratory permits an MRO, or an MRO's organization, to have a financial interest in the laboratory.

§ 40.103 What are the requirements for submitting blind specimens to a laboratory?

(a) As an employer or C/TPA with an aggregate of 2000 or more DOT-covered employees, you must send blind specimens to laboratories you use. If you have an aggregate of fewer than 2000 DOT-covered employees, you are not required to provide blind specimens.

(b) To each laboratory to which you send at least 100 specimens in a year, you must transmit a number of blind specimens equivalent to one percent of the specimens you send to that laboratory, up to a maximum of 50 blind specimens in each quarter (*i.e.*, January-March, April-June, July-September, October-December). As a C/TPA, you must apply this percentage to the total number of DOT-covered employees' specimens you send to the laboratory. Your blind specimen submissions must be evenly spread throughout the year. The following examples illustrate how this requirement works:

Example 1 to Paragraph (b). You send 2500 specimens to Lab X in Year 1. In this case, you would send 25 blind specimens to Lab X in Year 1. To meet the even distribution requirement, you would send 6 in each of three quarters and 7 in the other.

Example 2 to Paragraph (b). You send 2000 specimens to Lab X and 1000 specimens to Lab Y in Year 1. In this case, you would send 20 blind specimens to Lab X and 10 to Lab Y in Year 1. The even distribution requirement would apply in a similar way to that described in Example 1.

Example 3 to Paragraph (b). Same as Example 2, except that you also send 20 specimens to Lab Z. In this case, you would send blind specimens to Labs X and Y as in Example 2. You would not have to send any blind specimens to Lab Z, because you sent fewer than 100 specimens to Lab Z.

Example 4 to Paragraph (b). You are a C/TPA sending 2000 specimens to Lab X in Year 1. These 2000 specimens represent 200 small employers who have an average of 10 covered employees each. In this case you—not the individual employers—send 20 blind specimens to Lab X in Year 1, again ensuring even distribution. The individual employers you represent are not required to provide any blind specimens on their own.

Example 5 to Paragraph (b). You are a large C/TPA that sends 40,000 specimens to Lab Y in Year 1. One percent of that figure is 400. However, the 50 blind specimen per quarter ''cap'' means that you need send only 50 blind specimens per quarter, rather than the 100 per quarter you would have to send to meet the one percent rate. Your annual total would be 200, rather than 400, blind specimens.

(c) Approximately 75 percent of the specimens you submit must be negative (*i.e.*, containing no drugs, nor adulterated or substituted). Approximately 15 percent must be positive for one or more of the five drugs involved in DOT tests, and approximately 10 percent must either be adulterated with a substance cited in HHS guidance or substituted (*i.e.*, having specific gravity and creatinine meeting the criteria of § 40.93(b)).

(1) All negative, positive, adulterated, and substituted blind specimens you submit must be certified by the supplier and must have supplier-provided expiration dates.

(2) Negative specimens must be certified by immunoassay and GC/MS to contain no drugs.

(3) Drug positive blind specimens must be certified by immunoassay and GC/MS to contain a drug(s)/ metabolite(s) between 1.5 and 2 times the initial drug test cutoff concentration.

(4) Adulterated blind specimens must be certified to be adulterated with a specific adulterant using appropriate confirmatory validity test(s).

(5) Substituted blind specimens must be certified for creatinine concentration and specific gravity to satisfy the criteria for a substituted specimen using confirmatory creatinine and specific gravity tests, respectively.

(d) You must ensure that each blind specimen is indistinguishable to the laboratory from a normal specimen.

(1) You must submit blind specimens to the laboratory using the same channels (*e.g.*, via a regular collection site) through which employees' specimens are sent to the laboratory.

(2) You must ensure that the collector uses a CCF, places fictional initials on the specimen bottle label/seal, indicates for the MRO on Copy 2 that the specimen is a blind specimen, and discards Copies 4 and 5 (employer and employee copies).

(3) You must ensure that all blind specimens include split specimens.

[65 FR 79526, Dec. 19, 2000, as amended at 73 FR 35971, June 25, 2008]

§ 40.105 What happens if the laboratory reports a result different from that expected for a blind specimen?

(a) If you are an employer, MRO, or C/TPA who submits a blind specimen, and if the result reported to the MRO is different from the result expected, you must investigate the discrepancy.

(b) If the unexpected result is a false negative, you must provide the laboratory with the expected results (obtained from the supplier of the blind specimen), and direct the laboratory to determine the reason for the discrepancy.

(c) If the unexpected result is a false positive, adulterated, or substituted result, you must provide the laboratory with the expected results (obtained from the supplier of the blind specimen), and direct the laboratory to determine the reason for the discrepancy. You must also notify ODAPC of the discrepancy by telephone (202–366–3784) or e-mail (addresses are listed on the ODAPC Web site, *http://www.dot.gov/ost/dapc*). ODAPC will notify HHS who will take appropriate action.

[65 FR 79526, Dec. 19, 2000, as amended at 73 FR 35971, June 25, 2008]

§ 40.107 Who may inspect laboratories?

As a laboratory, you must permit an inspection, with or without prior notice, by ODAPC, a DOT agency, or a DOT-regulated employer that contracts with the laboratory for drug testing under the DOT drug testing program, or the designee of such an employer.

§ 40.109 What documentation must the laboratory keep, and for how long?

(a) As a laboratory, you must retain all records pertaining to each employee urine specimen for a minimum of two years.

(b) As a laboratory, you must also keep for two years employer-specific data required in § 40.111.

(c) Within the two-year period, the MRO, the employee, the employer, or a DOT agency may request in writing that you retain the records for an additional period of time (*e.g.*, for the purpose of preserving evidence for litigation or a safety investigation). If you receive such a request, you must comply with it. If you do not receive such a request, you may discard the records at the end of the two-year period.

§ 40.111 When and how must a laboratory disclose statistical summaries and other information it maintains?

(a) As a laboratory, you must transmit an aggregate statistical summary, by employer, of the data listed in Appendix B to this part to the employer on a semi-annual basis.

(1) The summary must not reveal the identity of any employee.

(2) In order to avoid sending data from which it is likely that information about an employee's test result can be readily inferred, you must not send a summary if the employer has fewer than five aggregate tests results.

(3) The summary must be sent by January 20 of each year for July 1 through December 31 of the prior year.

(4) The summary must also be sent by July 20 of each year for January 1 through June 30 of the current year.

(b) When the employer requests a summary in response to an inspection, audit, or review by a DOT agency, you must provide it unless the employer had fewer than five aggregate test results. In that case, you must send the employer a report indicating that not enough testing was conducted to warrant a summary. You may transmit the summary or report by hard copy, fax, or other electronic means.

(c) You must also release information to appropriate parties as provided in §§ 40.329 and 40.331.

(d) As a laboratory, you must transmit an aggregate statistical summary of the data listed in Appendix C to this part to DOT on a semi-annual basis. The summary must be sent by January 31 of each year for July 1 through December 31 of the prior year; it must be sent by July 31 of each year for January 1 through June 30 of the current year.

[65 FR 79526, Dec. 19, 2000, as amended at 73 FR 35971, June 25, 2008]

§ 40.113 Where is other information concerning laboratories found in this regulation?

You can find more information concerning laboratories in several sections of this part:

§ 40.3—Definition.
§ 40.13—Prohibition on making specimens available for other purposes.
§ 40.31—Conflicts of interest concerning collectors.
§ 40.47—Laboratory rejections of test for improper form.
§ 40.125—Conflicts of interest concerning MROs.
§ 40.175—Role of first laboratory in split specimen tests.
§ 40.177—Role of second laboratory in split specimen tests (drugs).
§ 40.179—Role of second laboratory in split specimen tests (adulterants).
§ 40.181—Role of second laboratory in split specimen tests (substitution).
§§ 40.183–40.185—Transmission of split specimen test results to MRO.
§§ 40.201–40.205—Role in correcting errors.
§ 40.329—Release of information to employees.
§ 40.331—Limits on release of information.
§ 40.355—Role with respect to other service agents.

Subpart G—Medical Review Officers and the Verification Process

§ 40.121 Who is qualified to act as an MRO?

To be qualified to act as an MRO in the DOT drug testing program, you must meet each of the requirements of this section:

(a) *Credentials.* You must be a licensed physician (Doctor of Medicine or Osteopathy). If you are a licensed physician in any U.S., Canadian, or Mexican jurisdiction and meet the other requirements of this section, you are authorized to perform MRO services with respect to all covered employees, wherever they are located. For example, if you are licensed as an M.D. in one state or province in the U.S., Canada, or Mexico, you are not limited to performing MRO functions in that state or province, and you may perform MRO functions for employees in other states or provinces without becoming licensed to practice medicine in the other jurisdictions.

(b) *Basic knowledge.* You must be knowledgeable in the following areas:

(1) You must be knowledgeable about and have clinical experience in controlled substances abuse disorders, including detailed knowledge of alternative medical explanations for laboratory confirmed drug test results.

(2) You must be knowledgeable about issues relating to adulterated and substituted specimens as well as the possible medical causes of specimens having an invalid result.

(3) You must be knowledgeable about this part, the DOT MRO Guidelines, and the DOT agency regulations applicable to the employers for whom you evaluate drug test results, and you must keep current on any changes to these materials. The DOT MRO Guidelines document is available from ODAPC (Department of Transportation, 1200 New Jersey Avenue, SE., Washington, DC 20590, 202–366–3784, or on the ODAPC web site (*http://www.dot.gov/ost/dapc*)).

(c) *Qualification training.* You must receive qualification training meeting the requirements of this paragraph (c).

(1) Qualification training must provide instruction on the following subjects:

(i) Collection procedures for urine specimens;

(ii) Chain of custody, reporting, and recordkeeping;

(iii) Interpretation of drug and validity tests results;

(iv) The role and responsibilities of the MRO in the DOT drug testing program;

(v) The interaction with other participants in the program (*e.g.*, DERs, SAPs); and

(vi) Provisions of this part and DOT agency rules applying to employers for whom you review test results, including changes and updates to this part and DOT agency rules, guidance, interpretations, and policies affecting the performance of MRO functions, as well as issues that MROs confront in carrying out their duties under this part and DOT agency rules.

(2) Following your completion of qualification training under paragraph (c)(1) of this section, you must satisfactorily complete an examination administered by a nationally-recognized MRO certification board or subspecialty board for medical practitioners in the field of medical review of DOT-mandated drug tests. The examination must comprehensively cover all the elements of qualification training listed in paragraph (c)(1) of this section.

(3) The following is the schedule for qualification training you must meet:

(i) If you became an MRO before August 1, 2001, and have already met the qualification training requirement, you do not have to meet it again.

(ii) If you became an MRO before August 1, 2001, but have not yet met the qualification training requirement, you must do so no later than January 31, 2003.

(iii) If you become an MRO on or after August 1, 2001, you must meet the qualification training requirement before you begin to perform MRO functions.

(d) *Continuing Education.* During each three-year period from the date on which you satisfactorily complete the examination under paragraph (c)(2) of this section, you must complete continuing education consisting of at least 12 professional development hours (*e.g.*, Continuing Education Medical Units) relevant to performing MRO functions.

(1) This continuing education must include material concerning new technologies, interpretations, recent guidance, rule changes, and other information about developments in MRO practice, pertaining to the DOT program, since the time you met the qualification training requirements of this section.

(2) Your continuing education activities must include assessment tools to assist you in determining whether you have adequately learned the material.

(3) If you are an MRO who completed the qualification training and examination requirements prior to August 1, 2001, you must complete your first increment of 12 CEU hours before August 1, 2004.

(e) *Documentation.* You must maintain documentation showing that you currently meet all requirements of this section. You must provide this documentation on request to DOT agency representatives and to employers and C/TPAs who are using or negotiating to use your services.

[65 FR 79526, Dec. 19, 2000, as amended at 66 FR 41951, Aug. 9, 2001]

§ 40.123 What are the MRO's responsibilities in the DOT drug testing program?

As an MRO, you have the following basic responsibilities:

(a) Acting as an independent and impartial ''gatekeeper'' and advocate for the accuracy and integrity of the drug testing process.

(b) Providing a quality assurance review of the drug testing process for the specimens under your purview. This includes, but is not limited to:

(1) Ensuring the review of the CCF on all specimen collections for the purposes of determining whether there is a problem that may cause a test to be cancelled (see §§ 40.199–40.203). As an MRO, you are not required to review laboratory internal chain of custody documentation. No one is permitted to cancel a test because you have not reviewed this documentation;

(2) Providing feedback to employers, collection sites and laboratories regarding performance issues where necessary; and

(3) Reporting to and consulting with the ODAPC or a relevant DOT agency when you wish DOT assistance in resolving any program issue. As an employer or service agent, you are prohibited from limiting or attempting to limit the MRO's access to DOT for this purpose and from retaliating in any way against an MRO for discussing drug testing issues with DOT.

(c) You must determine whether there is a legitimate medical explanation for confirmed positive, adulterated, substituted, and invalid drug tests results from the laboratory.

(d) While you provide medical review of employees' test results, this part does not deem that you have established a doctor-patient relationship with the employees whose tests you review.

(e) You must act to investigate and correct problems where possible and notify appropriate parties (*e.g.*, HHS, DOT, employers, service agents) where assistance is needed, (*e.g.*, cancelled or problematic tests, incorrect results, problems with blind specimens).

(f) You must ensure the timely flow of test results and other information to employers.

(g) You must protect the confidentiality of the drug testing information.

(h) You must perform all your functions in compliance with this part and other DOT agency regulations.

§ 40.125 What relationship may an MRO have with a laboratory?

As an MRO, you may not enter into any relationship with an employer's laboratory that creates a conflict of interest or the appearance of a conflict of interest with your responsibilities to that employer. You may not derive any financial benefit by having an employer use a specific laboratory. For examples of relationships between laboratories and MROs that the Department views as creating a conflict of interest or the appearance of such a conflict, see § 40.101(b).

§ 40.127 What are the MRO's functions in reviewing negative test results?

As the MRO, you must do the following with respect to negative drug test results you receive from a laboratory, prior to verifying the result and releasing it to the DER:

(a) Review Copy 2 of the CCF to determine if there are any fatal or correctable errors that may require you to initiate corrective action or to cancel the test (see §§ 40.199 and 40.203).

(b) Review the negative laboratory test result and ensure that it is consistent with the information contained on the CCF.

(c) Before you report a negative test result, you must have in your possession the following documents:

(1) Copy 2 of the CCF, a legible copy of it, or any other CCF copy containing the employee's signature; and

(2) A legible copy (fax, photocopy, image) of Copy 1 of the CCF or the electronic laboratory results report that conveys the negative laboratory test result.

(d) If the copy of the documentation provided to you by the collector or laboratory appears unclear, you must request that the collector or laboratory send you a legible copy.

(e) On Copy 2 of the CCF, place a check mark in the ''Negative'' box (Step 6), provide your name, and sign, initial, or stamp and date the verification statement.

(f) Report the result in a confidential manner (see §§ 40.163–40.167).

(g) Staff under your direct, personal supervision may perform the administrative functions of this section for you, but only you can cancel a test. If you cancel a laboratory-confirmed negative result, check the ''Test Cancelled'' box (Step 6) on Copy 2 of the CCF, make appropriate annotation in the ''Remarks'' line, provide your name, and sign, initial or stamp and date the verification statement.

(1) On specimen results that are reviewed by your staff, you are responsible for assuring the quality of their work.

(2) You are required to personally review at least 5 percent of all CCFs reviewed by your staff on a quarterly basis, including all results that required a corrective action. However,

you need not review more than 500 negative results in any quarter.

(3) Your review must, as a minimum, include the CCF, negative laboratory test result, any accompanying corrective documents, and the report sent to the employer. You must correct any errors that you discover. You must take action as necessary to ensure compliance by your staff with this part and document your corrective action. You must attest to the quality assurance review by initialing the CCFs that you review.

(4) You must make these CCFs easily identifiable and retrievable by you for review by DOT agencies.

[65 FR 79526, Dec. 19, 2000, as amended at 66 FR 41951, Aug. 9, 2001]

§ 40.129 What are the MRO's functions in reviewing laboratory confirmed non-negative drug test results?

(a) As the MRO, you must do the following with respect to confirmed positive, adulterated, substituted, or invalid drug tests you receive from a laboratory, before you verify the result and release it to the DER:

(1) Review Copy 2 of the CCF to determine if there are any fatal or correctable errors that may require you to cancel the test (see §§ 40.199 and 40.203). Staff under your direct, personal supervision may conduct this administrative review for you, but only you may verify or cancel a test.

(2) Review Copy 1 of the CCF and ensure that it is consistent with the information contained on Copy 2, that the test result is legible, and that the certifying scientist signed the form. You are not required to review any other documentation generated by the laboratory during their analysis or handling of the specimen (*e.g.*, the laboratory internal chain of custody).

(3) If the copy of the documentation provided to you by the collector or laboratory appears unclear, you must request that the collector or laboratory send you a legible copy.

(4) Except in the circumstances spelled out in § 40.133 , conduct a verification interview. This interview must include direct contact in person or by telephone between you and the employee. You may initiate the verification process based on the laboratory results report.

(5) Verify the test result, consistent with the requirements of §§ 40.135 through 40.145, 40.159, and 40.160, as:

(i) Negative; or

(ii) Cancelled; or

(iii) Positive, and/or refusal to test because of adulteration or substitution.

(b) Before you report a verified negative, positive, test cancelled, refusal to test because of adulteration or substitution, you must have in your possession the following documents:

(1) Copy 2 of the CCF, a legible copy of it, or any other CCF copy containing the employee's signature; and

(2) A legible copy (fax, photocopy, image) of Copy 1 of the CCF, containing the certifying scientist's signature.

(c) With respect to verified positive test results, place a check mark in the ''Positive'' box (Step 6) on Copy 2 of the CCF, indicate the drug(s)/ metabolite(s) detected on the ''Remarks'' line, sign and date the verification statement.

(d) If you cancel a laboratory confirmed positive, adulterated, substituted, or invalid drug test report, check the ''test cancelled'' box (Step 6) on Copy 2 of the CCF, make appropriate annotation in the ''Remarks'' line, sign, provide your name, and date the verification statement.

(e) Report the result in a confidential manner (see §§ 40.163–40.167).

(f) With respect to adulteration or substitution test results, check the ''refusal to test because:'' box (Step 6) on Copy 2 of the CCF, check the ''Adulterated'' or ''Substituted'' box, as appropriate, make appropriate annotation in the ''Remarks'' line, sign and date the verification statement.

(g) As the MRO, your actions concerning reporting confirmed positive, adulterated, or substituted results to the employer before you have completed the verification process are also governed by the stand-down provisions of § 40.21 .

(1) If an employer has a stand-down policy that meets the requirements of § 40.21 , you may report to the DER that you have received an employee's

laboratory confirmed positive, adulterated, or substituted test result, consistent with the terms of the waiver the employer received. You must not provide any further details about the test result (*e.g.*, the name of the drug involved).

(2) If the employer does not have a stand-down policy that meets the requirements of § 40.21 , you must not inform the employer that you have received an employee's laboratory confirmed positive, adulterated, or substituted test result until you verify the test result. For example, as an MRO employed directly by a company, you must not tell anyone on the company's staff or management that you have received an employee's laboratory confirmed test result.

[65 FR 79526, Dec. 19, 2000, as amended at 66 FR 41952, Aug. 9, 2001; 73 FR 35971, June 25, 2008]

§ 40.131 How does the MRO or DER notify an employee of the verification process after receiving laboratory confirmed non-negative drug test results?

(a) When, as the MRO, you receive a confirmed positive, adulterated, substituted, or invalid test result from the laboratory, you must contact the employee directly (*i.e.*, actually talk to the employee), on a confidential basis, to determine whether the employee wants to discuss the test result. In making this contact, you must explain to the employee that, if he or she declines to discuss the result, you will verify the test as positive or as a refusal to test because of adulteration or substitution, as applicable.

(b) As the MRO, staff under your personal supervision may conduct this initial contact for you.

(1) This staff contact must be limited to scheduling the discussion between you and the employee and explaining the consequences of the employee's declining to speak with you (*i.e.*, that the MRO will verify the test without input from the employee). If the employee declines to speak with you, the staff person must document the employee's decision, including the date and time.

(2) A staff person must not gather any medical information or information concerning possible explanations for the test result.

(3) A staff person may advise an employee to have medical information (*e.g.*, prescriptions, information forming the basis of a legitimate medical explanation for a confirmed positive test result) ready to present at the interview with the MRO.

(4) Since you are required to speak personally with the employee, face-to-face or on the phone, your staff must not inquire if the employee wishes to speak with you.

(c) As the MRO, you or your staff must make reasonable efforts to reach the employee at the day and evening telephone numbers listed on the CCF. Reasonable efforts include, as a minimum, three attempts, spaced reasonably over a 24-hour period, to reach the employee at the day and evening telephone numbers listed on the CCF. If you or your staff cannot reach the employee directly after making these efforts, you or your staff must take the following steps:

(1) Document the efforts you made to contact the employee, including dates and times. If both phone numbers are incorrect (*e.g.*, disconnected, wrong number), you may take the actions listed in paragraph (c)(2) of this section without waiting the full 24-hour period.

(2) Contact the DER, instructing the DER to contact the employee.

(i) You must simply direct the DER to inform the employee to contact you.

(ii) You must not inform the DER that the employee has a confirmed positive, adulterated, substituted, or invalid test result.

(iii) You must document the dates and times of your attempts to contact the DER, and you must document the name of the DER you contacted and the date and time of the contact.

(d) As the DER, you must attempt to contact the employee immediately, using procedures that protect, as much as possible, the confidentiality of the MRO's request that the employee contact the MRO. If you successfully contact the employee (i.e., actually talk to the employee), you must document the date and time of the contact, and inform the MRO. You must inform the employee that he or she should contact the MRO immediately. You must also

inform the employee of the consequences of failing to contact the MRO within the next 72 hours (see § 40.133(a)(2)).

(1) As the DER, you must not inform anyone else working for the employer that you are seeking to contact the employee on behalf of the MRO.

(2) If, as the DER, you have made all reasonable efforts to contact the employee but failed to do so, you may place the employee on temporary medically unqualified status or medical leave. Reasonable efforts include, as a minimum, three attempts, spaced reasonably over a 24-hour period, to reach the employee at the day and evening telephone numbers listed on the CCF.

(i) As the DER, you must document the dates and times of these efforts.

(ii) If, as the DER, you are unable to contact the employee within this 24-hour period, you must leave a message for the employee by any practicable means (*e.g.,* voice mail, e-mail, letter) to contact the MRO and inform the MRO of the date and time of this attempted contact.

[65 FR 79526, Dec. 19, 2000, as amended at 66 FR 41952, Aug. 9, 2001; 68 FR 31626, May 28, 2003; 69 FR 64867, Nov. 9, 2004]

§ 40.133 Without interviewing the employee, under what circumstances may the MRO verify a test result as positive, or as a refusal to test because of adulteration or substitution, or as cancelled because the test was invalid?

(a) As the MRO, you normally may verify a confirmed positive test (for any drug or drug metabolite, including opiates), or as a refusal to test because of adulteration or substitution, only after interviewing the employee as provided in §§ 40.135–40.145 . However, there are three circumstances in which you may verify such a result without an interview:

(1) You may verify a test result as a positive or refusal to test, as applicable, if the employee expressly declines the opportunity to discuss the test with you. You must maintain complete documentation of this occurrence, including notation of informing, or attempting to inform, the employee of the consequences of not exercising the option to speak with the you.

(2) You may verify a test result as a positive or refusal to test, as applicable, if the DER has successfully made and documented a contact with the employee and instructed the employee to contact you and more than 72 hours have passed since the time the DER contacted the employee.

(3) You may verify a test result as a positive or refusal to test, as applicable, if neither you nor the DER, after making and documenting all reasonable efforts, has been able to contact the employee within ten days of the date on which the MRO receives the confirmed test result from the laboratory.

(b) As the MRO, you may verify an invalid test result as cancelled (with instructions to recollect immediately under direct observation) without interviewing the employee, as provided at § 40.159:

(1) If the employee expressly declines the opportunity to discuss the test with you;

(2) If the DER has successfully made and documented a contact with the employee and instructed the employee to contact you and more than 72 hours have passed since the time the DER contacted the employee; or

(3) If neither you nor the DER, after making and documenting all reasonable efforts, has been able to contact the employee within ten days of the date on which you received the confirmed invalid test result from the laboratory.

(c) As the MRO, after you verify a test result as a positive or as a refusal to test under this section, you must document the date and time and reason, following the instructions in § 40.163. For a cancelled test due to an invalid result under this section, you must follow the instructions in § 40.159(a)(5).

(d) As the MRO, after you have verified a test result under this section and reported the result to the DER, you must allow the employee to present information to you within 60 days of the verification to document that serious illness, injury, or other circumstances unavoidably precluded contact with the MRO and/or DER in the times provided. On the basis of such information, you may reopen the

verification, allowing the employee to present information concerning whether there is a legitimate medical explanation of the confirmed test result.

[65 FR 79526, Dec. 19, 2000, as amended at 73 FR 35971, June 25, 2008]

§ 40.135 What does the MRO tell the employee at the beginning of the verification interview?

(a) As the MRO, you must tell the employee that the laboratory has determined that the employee's test result was positive, adulterated, substituted, or invalid, as applicable. You must also tell the employee of the drugs for which his or her specimen tested positive, or the basis for the finding of adulteration or substitution.

(b) You must explain the verification interview process to the employee and inform the employee that your decision will be based on information the employee provides in the interview.

(c) You must explain that, if further medical evaluation is needed for the verification process, the employee must comply with your request for this evaluation and that failure to do so is equivalent of expressly declining to discuss the test result.

(d) As the MRO, you must warn an employee who has a confirmed positive, adulterated, substituted or invalid test that you are required to provide to third parties drug test result information and medical information affecting the performance of safety-sensitive duties that the employee gives you in the verification process without the employee's consent (see § 40.327).

(1) You must give this warning to the employee before obtaining any medical information as part of the verification process.

(2) For purposes of this paragraph (d), medical information includes information on medications or other substances affecting the performance of safety-sensitive duties that the employee reports using or medical conditions the employee reports having.

(3) For purposes of this paragraph (d), the persons to whom this information may be provided include the employer, a SAP evaluating the employee as part of the return to duty process (see § 40.293(g)), DOT, another Federal safety agency (*e.g.*, the NTSB), or any state safety agency as required by state law.

(e) You must also advise the employee that, after informing any third party about any medication the employee is using pursuant to a legally valid prescription under the Controlled Substances Act, you will allow 5 days for the employee to have the prescribing physician contact you to determine if the medication can be changed to one that does not make the employee medically unqualified or does not pose a significant safety risk. If, as an MRO, you receive such information from the prescribing physician, you must transmit this information to any third party to whom you previously provided information about the safety risks of the employee's other medication.

[65 FR 79526, Dec. 19, 2000, as amended at 66 FR 41952, Aug. 9, 2001]

§ 40.137 On what basis does the MRO verify test results involving marijuana, cocaine, amphetamines, or PCP?

(a) As the MRO, you must verify a confirmed positive test result for marijuana, cocaine, amphetamines, and/or PCP unless the employee presents a legitimate medical explanation for the presence of the drug(s)/metabolite(s) in his or her system.

(b) You must offer the employee an opportunity to present a legitimate medical explanation in all cases.

(c) The employee has the burden of proof that a legitimate medical explanation exists. The employee must present information meeting this burden at the time of the verification interview. As the MRO, you have discretion to extend the time available to the employee for this purpose for up to five days before verifying the test result, if you determine that there is a reasonable basis to believe that the employee will be able to produce relevant evidence concerning a legitimate medical explanation within that time.

(d) If you determine that there is a legitimate medical explanation, you must verify the test result as negative. Otherwise, you must verify the test result as positive.

(e) In determining whether a legitimate medical explanation exists, you

may consider the employee's use of a medication from a foreign country. You must exercise your professional judgment consistently with the following principles:

(1) There can be a legitimate medical explanation only with respect to a substance that is obtained legally in a foreign country.

(2) There can be a legitimate medical explanation only with respect to a substance that has a legitimate medical use. Use of a drug of abuse (*e.g.*, heroin, PCP, marijuana) or any other substance (see § 40.151(f) and (g)) that cannot be viewed as having a legitimate medical use can never be the basis for a legitimate medical explanation, even if the substance is obtained legally in a foreign country.

(3) Use of the substance can form the basis of a legitimate medical explanation only if it is used consistently with its proper and intended medical purpose.

(4) Even if you find that there is a legitimate medical explanation under this paragraph (e) and verify a test negative, you may have a responsibility to raise fitness-for-duty considerations with the employer (see § 40.327).

§ 40.139 On what basis does the MRO verify test results involving opiates?

As the MRO, you must proceed as follows when you receive a laboratory confirmed positive opiate result:

(a) If the laboratory detects the presence of 6-acetylmorphine (6-AM) in the specimen, you must verify the test result positive.

(b) In the absence of 6-AM, if the laboratory detects the presence of either morphine or codeine at 15,000 ng/mL or above, you must verify the test result positive unless the employee presents a legitimate medical explanation for the presence of the drug or drug metabolite in his or her system, as in the case of other drugs (see § 40.137). Consumption of food products (*e.g.*, poppy seeds) must not be considered a legitimate medical explanation for the employee having morphine or codeine at these concentrations.

(c) For all other opiate positive results, you must verify a confirmed positive test result for opiates only if you determine that there is clinical evidence, in addition to the urine test, of unauthorized use of any opium, opiate, or opium derivative (i.e., morphine, heroin, or codeine).

(1) As an MRO, it is your responsibility to use your best professional and ethical judgement and discretion to determine whether there is clinical evidence of unauthorized use of opiates. Examples of information that you may consider in making this judgement include, but are not limited to, the following:

(i) Recent needle tracks;

(ii) Behavioral and psychological signs of acute opiate intoxication or withdrawal;

(iii) Clinical history of unauthorized use recent enough to have produced the laboratory test result;

(iv) Use of a medication from a foreign country. See § 40.137(e) for guidance on how to make this determination.

(2) In order to establish the clinical evidence referenced in paragraphs (c)(1)(i) and (ii) of this section, personal observation of the employee is essential.

(i) Therefore, you, as the MRO, must conduct, or cause another physician to conduct, a face-to-face examination of the employee.

(ii) No face-to-face examination is needed in establishing the clinical evidence referenced in paragraph (c)(1)(iii) or (iv) of this section.

(3) To be the basis of a verified positive result for opiates, the clinical evidence you find must concern a drug that the laboratory found in the specimen. (For example, if the test confirmed the presence of codeine, and the employee admits to unauthorized use of hydrocodone, you do not have grounds for verifying the test positive. The admission must be for the substance that was found).

(4) As the MRO, you have the burden of establishing that there is clinical evidence of unauthorized use of opiates referenced in this paragraph (c). If you cannot make this determination (*e.g.*, there is not sufficient clinical evidence or history), you must verify the test as negative. The employee does not need to show you that a legitimate medical

explanation exists if no clinical evidence is established.

§ 40.141 How does the MRO obtain information for the verification decision?

As the MRO, you must do the following as you make the determinations needed for a verification decision:

(a) You must conduct a medical interview. You must review the employee's medical history and any other relevant biomedical factors presented to you by the employee. You may direct the employee to undergo further medical evaluation by you or another physician.

(b) If the employee asserts that the presence of a drug or drug metabolite in his or her specimen results from taking prescription medication, you must review and take all reasonable and necessary steps to verify the authenticity of all medical records the employee provides. You may contact the employee's physician or other relevant medical personnel for further information.

§ 40.143 [Reserved]

§ 40.145 On what basis does the MRO verify test results involving adulteration or substitution?

(a) As an MRO, when you receive a laboratory report that a specimen is adulterated or substituted, you must treat that report in the same way you treat the laboratory's report of a confirmed positive for a drug or drug metabolite.

(b) You must follow the same procedures used for verification of a confirmed positive test for a drug or drug metabolite (see §§ 40.129–40.135, 40.141, 40.151), except as otherwise provided in this section.

(c) In the verification interview, you must explain the laboratory findings to the employee and address technical questions or issues the employee may raise.

(d) You must offer the employee the opportunity to present a legitimate medical explanation for the laboratory findings with respect to presence of the adulterant in, or the creatinine and specific gravity findings for, the specimen.

(e) The employee has the burden of proof that there is a legitimate medical explanation.

(1) To meet this burden in the case of an adulterated specimen, the employee must demonstrate that the adulterant found by the laboratory entered the specimen through physiological means.

(2) To meet this burden in the case of a substituted specimen, the employee must demonstrate that he or she did produce or could have produced urine through physiological means, meeting the creatinine concentration criterion of less than 2 mg/dL and the specific gravity criteria of less than or equal to 1.0010 or greater than or equal to 1.0200 (see § 40.93(b)).

(3) The employee must present information meeting this burden at the time of the verification interview. As the MRO, you have discretion to extend the time available to the employee for this purpose for up to five days before verifying the specimen, if you determine that there is a reasonable basis to believe that the employee will be able to produce relevant evidence supporting a legitimate medical explanation within that time.

(f) As the MRO or the employer, you are not responsible for arranging, conducting, or paying for any studies, examinations or analyses to determine whether a legitimate medical explanation exists.

(g) As the MRO, you must exercise your best professional judgment in deciding whether the employee has established a legitimate medical explanation.

(1) If you determine that the employee's explanation does not present a reasonable basis for concluding that there may be a legitimate medical explanation, you must report the test to the DER as a verified refusal to test because of adulteration or substitution, as applicable.

(2) If you believe that the employee's explanation may present a reasonable basis for concluding that there is a legitimate medical explanation, you must direct the employee to obtain, within the five-day period set forth in paragraph (e)(3) of this section, a further medical evaluation. This evaluation must be performed by a licensed physician (the ''referral physician''),

acceptable to you, with expertise in the medical issues raised by the employee's explanation. (The MRO may perform this evaluation if the MRO has appropriate expertise.)

(i) As the MRO or employer, you are not responsible for finding or paying a referral physician. However, on request of the employee, you must provide reasonable assistance to the employee's efforts to find such a physician. The final choice of the referral physician is the employee's, as long as the physician is acceptable to you.

(ii) As the MRO, you must consult with the referral physician, providing guidance to him or her concerning his or her responsibilities under this section. As part of this consultation, you must provide the following information to the referral physician:

(A) That the employee was required to take a DOT drug test, but the laboratory reported that the specimen was adulterated or substituted, which is treated as a refusal to test;

(B) The consequences of the appropriate DOT agency regulation for refusing to take the required drug test;

(C) That the referral physician must agree to follow the requirements of paragraphs (g)(3) through (g)(4) of this section; and

(D) That the referral physician must provide you with a signed statement of his or her recommendations.

(3) As the referral physician, you must evaluate the employee and consider any evidence the employee presents concerning the employee's medical explanation. You may conduct additional tests to determine whether there is a legitimate medical explanation. Any additional urine tests must be performed in an HHS-certified laboratory.

(4) As the referral physician, you must then make a written recommendation to the MRO about whether the MRO should determine that there is a legitimate medical explanation. As the MRO, you must seriously consider and assess the referral physician's recommendation in deciding whether there is a legitimate medical explanation.

(5) As the MRO, if you determine that there is a legitimate medical explanation, you must cancel the test and inform ODAPC in writing of the determination and the basis for it (*e.g.*, referral physician's findings, evidence produced by the employee).

(6) As the MRO, if you determine that there is not a legitimate medical explanation, you must report the test to the DER as a verified refusal to test because of adulteration or substitution.

(h) The following are examples of types of evidence an employee could present to support an assertion of a legitimate medical explanation for a substituted result.

(1) Medically valid evidence demonstrating that the employee is capable of physiologically producing urine meeting the creatinine and specific gravity criteria of § 40.93(b).

(i) To be regarded as medically valid, the evidence must have been gathered using appropriate methodology and controls to ensure its accuracy and reliability.

(ii) Assertion by the employee that his or her personal characteristics (*e.g.*, with respect to race, gender, weight, diet, working conditions) are responsible for the substituted result does not, in itself, constitute a legitimate medical explanation. To make a case that there is a legitimate medical explanation, the employee must present evidence showing that the cited personal characteristics actually result in the physiological production of urine meeting the creatinine and specific gravity criteria of § 40.93(b).

(2) Information from a medical evaluation under paragraph (g) of this section that the individual has a medical condition that has been demonstrated to cause the employee to physiologically produce urine meeting the creatinine and specific gravity criteria of § 40.93(b).

(i) A finding or diagnosis by the physician that an employee has a medical condition, in itself, does not constitute a legitimate medical explanation.

(ii) To establish there is a legitimate medical explanation, the employee must demonstrate that the cited medical condition actually results in the

physiological production of urine meeting the creatinine and specific gravity criteria of § 40.93(b).

[65 FR 79526, Dec. 19, 2000, as amended at 68 FR 31626, May 28, 2003; 69 FR 64867, Nov. 9, 2004]

§ 40.147 [Reserved]

§ 40.149 May the MRO change a verified drug test result?

(a) As the MRO, you may change a verified test result only in the following situations:

(1) When you have reopened a verification that was done without an interview with an employee (see § 40.133(d)).

(2) If you receive information, not available to you at the time of the original verification, demonstrating that the laboratory made an error in identifying (*e.g.*, a paperwork mistake) or testing (*e.g.*, a false positive or negative) the employee's primary or split specimen. For example, suppose the laboratory originally reported a positive test result for Employee X and a negative result for Employee Y. You verified the test results as reported to you. Then the laboratory notifies you that it mixed up the two test results, and X was really negative and Y was really positive. You would change X's test result from positive to negative and contact Y to conduct a verification interview.

(3) If, within 60 days of the original verification decision—

(i) You receive information that could not reasonably have been provided to you at the time of the decision demonstrating that there is a legitimate medical explanation for the presence of drug(s)/metabolite(s) in the employee's specimen; or

(ii) You receive credible new or additional evidence that a legitimate medical explanation for an adulterated or substituted result exists.

Example to Paragraph (a)(3)*:* If the employee's physician provides you a valid prescription that he or she failed to find at the time of the original verification, you may change the test result from positive to negative if you conclude that the prescription provides a legitimate medical explanation for the drug(s)/ metabolite(s) in the employee's specimen.

(4) If you receive the information in paragraph (a)(3) of this section after the 60-day period, you must consult with ODAPC prior to changing the result.

(5) When you have made an administrative error and reported an incorrect result.

(b) If you change the result, you must immediately notify the DER in writing, as provided in §§ 40.163–40.165.

(c) You are the only person permitted to change a verified test result, such as a verified positive test result or a determination that an individual has refused to test because of adulteration or substitution. This is because, as the MRO, you have the sole authority under this part to make medical determinations leading to a verified test (e.g., a determination that there was or was not a legitimate medical explanation for a laboratory test result). For example, an arbitrator is not permitted to overturn the medical judgment of the MRO that the employee failed to present a legitimate medical explanation for a positive, adulterated, or substituted test result of his or her specimen.

[65 FR 79526, Dec. 19, 2000, as amended at 66 FR 41952, Aug. 9, 2001; 73 FR 35971, June 25, 2008]

§ 40.151 What are MROs prohibited from doing as part of the verification process?

As an MRO, you are prohibited from doing the following as part of the verification process:

(a) You must not consider any evidence from tests of urine samples or other body fluids or tissues (*e.g.*, blood or hair samples) that are not collected or tested in accordance with this part. For example, if an employee tells you he went to his own physician, provided a urine specimen, sent it to a laboratory, and received a negative test result or a DNA test result questioning the identity of his DOT specimen, you are required to ignore this test result.

(b) It is not your function to make decisions about factual disputes between the employee and the collector concerning matters occurring at the collection site that are not reflected on the CCF (e.g., concerning allegations that the collector left the area or left

open urine containers where other people could access them).

(c) It is not your function to determine whether the employer should have directed that a test occur. For example, if an employee tells you that the employer misidentified her as the subject of a random test, or directed her to take a reasonable suspicion or post-accident test without proper grounds under a DOT agency drug or alcohol regulation, you must inform the employee that you cannot play a role in deciding these issues.

(d) It is not your function to consider explanations of confirmed positive, adulterated, or substituted test results that would not, even if true, constitute a legitimate medical explanation. For example, an employee may tell you that someone slipped amphetamines into her drink at a party, that she unknowingly ingested a marijuana brownie, or that she traveled in a closed car with several people smoking crack. MROs are unlikely to be able to verify the facts of such passive or unknowing ingestion stories. Even if true, such stories do not present a legitimate medical explanation. Consequently, you must not declare a test as negative based on an explanation of this kind.

(e) You must not verify a test negative based on information that a physician recommended that the employee use a drug listed in Schedule I of the Controlled Substances Act. (*e.g.*, under a state law that purports to authorize such recommendations, such as the ''medical marijuana'' laws that some states have adopted).

(f) You must not accept an assertion of consumption or other use of a hemp or other non-prescription marijuana-related product as a basis for verifying a marijuana test negative. You also must not accept such an explanation related to consumption of coca teas as a basis for verifying a cocaine test result as negative. Consuming or using such a product is not a legitimate medical explanation.

(g) You must not accept an assertion that there is a legitimate medical explanation for the presence of PCP or 6-AM in a specimen. There are no legitimate medical explanations for the presence of these substances.

(h) You must not accept, as a legitimate medical explanation for an adulterated specimen, an assertion that soap, bleach, or glutaraldehyde entered a specimen through physiological means. There are no physiological means through which these substances can enter a specimen.

(i) You must not accept, as a legitimate medical explanation for a substituted specimen, an assertion that an employee can produce urine with no detectable creatinine. There are no physiological means through which a person can produce a urine specimen having this characteristic.

[65 FR 79526, Dec. 19, 2000, as amended at 66 FR 41952, Aug. 9, 2001]

§ 40.153 How does the MRO notify employees of their right to a test of the split specimen?

(a) As the MRO, when you have verified a drug test as positive for a drug or drug metabolite, or as a refusal to test because of adulteration or substitution, you must notify the employee of his or her right to have the split specimen tested. You must also notify the employee of the procedures for requesting a test of the split specimen.

(b) You must inform the employee that he or she has 72 hours from the time you provide this notification to him or her to request a test of the split specimen.

(c) You must tell the employee how to contact you to make this request. You must provide telephone numbers or other information that will allow the employee to make this request. As the MRO, you must have the ability to receive the employee's calls at all times during the 72 hour period (*e.g.*, by use of an answering machine with a ''time stamp'' feature when there is no one in your office to answer the phone).

(d) You must tell the employee that if he or she makes this request within 72 hours, the employer must ensure that the test takes place, and that the employee is not required to pay for the test from his or her own funds before the test takes place. You must also tell the employee that the employer may seek reimbursement for the cost of the test (see § 40.173).

(e) You must tell the employee that additional tests of the specimen *e.g.*, DNA tests) are not authorized.

§ 40.155 What does the MRO do when a negative or positive test result is also dilute?

(a) When the laboratory reports that a specimen is dilute, you must, as the MRO, report to the DER that the specimen, in addition to being negative or positive, is dilute.

(b) You must check the ''dilute'' box (Step 6) on Copy 2 of the CCF.

(c) When you report a dilute specimen to the DER, you must explain to the DER the employer's obligations and choices under § 40.197, to include the requirement for an immediate recollection under direct observation if the creatinine concentration of a negative-dilute specimen was greater than or equal to 2mg/dL but less than or equal to 5mg/dL.

(d) If the employee's recollection under direct observation, in paragraph (c) of this section, results in another negative-dilute, as the MRO, you must:

(1) Review the CCF to ensure that there is documentation that the recollection was directly observed.

(2) If the CCF documentation shows that the recollection was directly observed as required, report this result to the DER as a negative-dilute result.

(3) If CCF documentation indicates that the recollection was not directly observed as required, do not report a result but again explain to the DER that there must be an immediate recollection under direct observation.

[65 FR 79526, Dec. 19, 2000, as amended at 66 FR 41952, Aug. 9, 2001; 68 FR 31626, May 28, 2003; 69 FR 64867, Nov. 9, 2004; 73 FR 35971, June 25, 2008]

§ 40.157 [Reserved]

§ 40.159 What does the MRO do when a drug test result is invalid?

(a) As the MRO, when the laboratory reports that the test result is an invalid result, you must do the following:

(1) Discuss the laboratory results with a certifying scientist to determine if the primary specimen should be tested at another HHS certified laboratory. If the laboratory did not contact you as required by §§ 40.91(e) and 40.96(c), you must contact the laboratory.

(2) If you and the laboratory have determined that no further testing is necessary, contact the employee and inform the employee that the specimen was invalid. In contacting the employee, use the procedures set forth in § 40.131.

(3) After explaining the limits of disclosure (see §§ 40.135(d) and 40.327), you must determine if the employee has a medical explanation for the invalid result. You must inquire about the medications the employee may have taken.

(4) If the employee gives an explanation that is acceptable, you must:

(i) Place a check mark in the ''Test Cancelled'' box (Step 6) on Copy 2 of the CCF and enter ''Invalid Result'' and ''direct observation collection not required'' on the ''Remarks'' line.

(ii) Report to the DER that the test is cancelled, the reason for cancellation, and that no further action is required unless a negative test result is required (*i.e.*, pre-employment, return-to-duty, or follow-up tests).

(iii) If a negative test result is required and the medical explanation concerns a situation in which the employee has a permanent or long-term medical condition that precludes him or her from providing a valid specimen, as the MRO, you must follow the procedures outlined at § 40.160 for determining if there is clinical evidence that the individual is an illicit drug user.

(5) If the employee is unable to provide an explanation and/or a valid prescription for a medication that interfered with the immunoassay test but denies having adulterated the specimen, you must:

(i) Place a check mark in the ''Test Cancelled'' box (Step 6) on Copy 2 of the CCF and enter ''Invalid Result'' and ''direct observation collection required'' on the ''Remarks'' line.

(ii) Report to the DER that the test is cancelled, the reason for cancellation, and that a second collection must take place immediately under direct observation.

(iii) Instruct the employer to ensure that the employee has the minimum possible advance notice that he or she must go to the collection site.

(b) You may only report an invalid test result when you are in possession of a legible copy of Copy 1 of the CCF. In addition, you must have Copy 2 of the CCF, a legible copy of it, or any other copy of the CCF containing the employee's signature.

(c) If the employee admits to having adulterated or substituted the specimen, you must, on the same day, write and sign your own statement of what the employee told you. You must then report a refusal to test in accordance with § 40.163 .

(d) If the employee admits to using a drug, you must, on the same day, write and sign your own statement of what the employee told you. You must then report that admission to the DER for appropriate action under DOT Agency regulations. This test will be reported as cancelled with the reason noted.

(e) If the employee's recollection (required at paragraph (a)(5) of this section) results in another invalid result for the same reason as reported for the first specimen, as the MRO, you must:

(1) Review the CCF to ensure that there is documentation that the recollection was directly observed.

(2) If the CCF review indicates that the recollection was directly observed as required, document that the employee had another specimen with an invalid result for the same reason.

(3) Follow the recording and reporting procedures at (a)(4)(i) and (ii) of this section.

(4) If a negative result is required (i.e., pre-employment, return-to-duty, or follow-up tests), follow the procedures at § 40.160 for determining if there is clinical evidence that the individual is an illicit drug user.

(5) If the recollection was not directly observed as required, do not report a result but again explain to the DER that there must be an immediate recollection under direct observation.

(f) If the employee's recollection (required at paragraph (a)(5) of this section) results in another invalid result for a different reason than that reported for the first specimen, as the MRO, you must:

(1) Review the CCF to ensure that there is documentation that the recollection was directly observed.

(2) If the CCF review indicates that the recollection was directly observed as required, document that the employee had another specimen with an invalid result for a different reason.

(3) As the MRO, you should not contact the employee to discuss the result, but rather direct the DER to conduct an immediate recollection under direct observation without prior notification to the employee.

(4) If the CCF documentation indicates that the recollection was not directly observed as required, do not report a result but again explain to the DER that there must be an immediate recollection under direct observation.

(g) If, as the MRO, you receive a laboratory invalid result in conjunction with a positive, adulterated, and/or substituted result and you verify any of those results as being a positive and/or refusal to test, you do not report the invalid result unless the split specimen fails to reconfirm the result(s) of the primary specimen.

[65 FR 79526, Dec. 19, 2000, as amended at 73 FR 35972, June 25, 2008]

§ 40.160 What does the MRO do when a valid test result cannot be produced and a negative result is required?

(a) If a valid test result cannot be produced and a negative result is required, (under § 40.159 (a)(5)(iii) and (e)(4)), as the MRO, you must determine if there is clinical evidence that the individual is currently an illicit drug user. You must make this determination by personally conducting, or causing to be conducted, a medical evaluation. In addition, if appropriate, you may also consult with the employee's physician to gather information you need to reach this determination.

(b) If you do not personally conduct the medical evaluation, as the MRO, you must ensure that one is conducted by a licensed physician acceptable to you.

(c) For purposes of this section, the MRO or the physician conducting the evaluation may conduct an alternative test (e.g., blood) as part of the medically appropriate procedures in determining clinical evidence of drug use.

(d) If the medical evaluation reveals no clinical evidence of drug use, as the

MRO, you must report this to the employer as a negative test result with written notations regarding the medical examination. The report must also state why the medical examination was required (i.e., either the basis for the determination that a permanent or long-term medical condition exists or because the recollection under direct observation resulted in another invalid result for the same reason, as appropriate) and for the determination that no signs and symptoms of drug use exist.

(1) Check ''Negative'' (Step 6) on the CCF.

(2) Sign and date the CCF.

(e) If the medical evaluation reveals clinical evidence of drug use, as the MRO, you must report the result to the employer as a cancelled test with written notations regarding the results of the medical examination. The report must also state why the medical examination was required (i.e., either the basis for the determination that a permanent or long-term medical condition exists or because the recollection under direct observation resulted in another invalid result for the same reason, as appropriate) and state the reason for the determination that signs and symptoms of drug use exist. Because this is a cancelled test, it does not serve the purpose of an actual negative test result (i.e., the employer is not authorized to allow the employee to begin or resume performing safety-sensitive functions, because a negative test result is needed for that purpose).

[73 FR 35972, June 25, 2008]

§ 40.161 What does the MRO do when a drug test specimen is rejected for testing?

As the MRO, when the laboratory reports that the specimen is rejected for testing (*e.g.*, because of a fatal or uncorrected flaw), you must do the following:

(a) Place a check mark in the ''Test Cancelled'' box (Step 6) on Copy 2 of the CCF and enter the reason on the ''Remarks'' line.

(b) Report to the DER that the test is cancelled and the reason for cancellation, and that no further action is required unless a negative test is required (*e.g.*, in the case of a pre-employment, return-to-duty, or follow-up test).

(c) You may only report a test cancelled because of a rejected for testing test result when you are in possession of a legible copy of Copy 1 of the CCF. In addition, you must have Copy 2 of the CCF, a legible copy of it, or any other copy of the CCF containing the employee's signature.

§ 40.162 What must MROs do with multiple verified results for the same testing event?

(a) If the testing event is one in which there was one specimen collection with multiple verified non-negative results, as the MRO, you must report them all to the DER. For example, if you verified the specimen as being positive for marijuana and cocaine and as being a refusal to test because the specimen was also adulterated, as the MRO, you should report the positives and the refusal to the DER.

(b) If the testing event was one in which two separate specimen collections (e.g., a specimen out of temperature range and the subsequent observed collection) were sent to the laboratory, as the MRO, you must:

(1) If both specimens were verified negative, report the result as negative.

(2) If either of the specimens was verified negative and the other was verified as one or more non-negative(s), report the non-negative result(s) only. For example, if you verified one specimen as negative and the other as a refusal to test because the second specimen was substituted, as the MRO you should report only the refusal to the DER.

(i) If the first specimen is reported as negative, but the result of the second specimen has not been reported by the laboratory, as the MRO, you should hold—not report—the result of the first specimen until the result of the second specimen is received.

(ii) If the first specimen is reported as non-negative, as the MRO, you should report the result immediately and not wait to receive the result of the second specimen.

(3) If both specimens were verified non-negative, report all of the non-negative results. For example, if you verified one specimen as positive and

the other as a refusal to test because the specimen was adulterated, as the MRO, you should report the positive and the refusal results to the DER.

(c) As an exception to paragraphs (a) and (b) of this section, as the MRO, you must follow procedures at §40.159(f) when any verified non-negative result is also invalid.

[73 FR 35972, June 25, 2008]

§ 40.163 How does the MRO report drug test results?

(a) As the MRO, it is your responsibility to report all drug test results to the employer.

(b) You may use a signed or stamped and dated legible photocopy of Copy 2 of the CCF to report test results.

(c) If you do not report test results using Copy 2 of the CCF for this purpose, you must provide a written report (e.g., a letter) for each test result. This report must, as a minimum, include the following information:

(1) Full name, as indicated on the CCF, of the employee tested;

(2) Specimen ID number from the CCF and the donor SSN or employee ID number;

(3) Reason for the test, if indicated on the CCF (e.g., random, post-accident);

(4) Date of the collection;

(5) Date you received Copy 2 of the CCF;

(6) Result of the test (i.e., positive, negative, dilute, refusal to test, test cancelled) and the date the result was verified by the MRO;

(7) For verified positive tests, the drug(s)/metabolite(s) for which the test was positive;

(8) For cancelled tests, the reason for cancellation; and

(9) For refusals to test, the reason for the refusal determination (e.g., in the case of an adulterated test result, the name of the adulterant).

(d) As an exception to the reporting requirements of paragraph (b) and (c) of this section, the MRO may report negative results using an electronic data file.

(1) If you report negatives using an electronic data file, the report must contain, as a minimum, the information specified in paragraph (c) of this section, as applicable for negative test results.

(2) In addition, the report must contain your name, address, and phone number, the name of any person other than you reporting the results, and the date the electronic results report is released.

(e) You must retain a signed or stamped and dated copy of Copy 2 of the CCF in your records. If you do not use Copy 2 for reporting results, you must maintain a copy of the signed or stamped and dated letter in addition to the signed or stamped and dated Copy 2. If you use the electronic data file to report negatives, you must maintain a retrievable copy of that report in a format suitable for inspection and auditing by a DOT representative.

(f) You must not use Copy 1 of the CCF to report drug test results.

(g) You must not provide quantitative values to the DER or C/TPA for drug or validity test results. However, you must provide the test information in your possession to a SAP who consults with you (see §40.293(g)).

[66 FR 41952, Aug. 9, 2001]

§ 40.165 To whom does the MRO transmit reports of drug test results?

(a) As the MRO, you must report all drug test results to the DER, except in the circumstances provided for in §40.345 .

(b) If the employer elects to receive reports of results through a C/TPA, acting as an intermediary as provided in §40.345 , you must report the results through the designated C/TPA.

§ 40.167 How are MRO reports of drug results transmitted to the employer?

As the MRO or C/TPA who transmits drug test results to the employer, you must comply with the following requirements:

(a) You must report the results in a confidential manner.

(b) You must transmit to the DER on the same day the MRO verifies the result or the next business day all verified positive test results, results requiring an immediate collection under direct observation, adulterated or substituted specimen results, and other refusals to test.

(1) Direct telephone contact with the DER is the preferred method of immediate reporting. Follow up your phone call with appropriate documentation (see § 40.163).

(2) You are responsible for identifying yourself to the DER, and the DER must have a means to confirm your identification.

(3) The MRO's report that you transmit to the employer must contain all of the information required by § 40.163 .

(c) You must transmit the MRO's report(s) of verified tests to the DER so that the DER receives it within two days of verification by the MRO.

(1) You must fax, courier, mail, or electronically transmit a legible image or copy of either the signed or stamped and dated Copy 2 or the written report (see § 40.163(b) and (c)).

(2) Negative results reported electronically (i.e., computer data file) do not require an image of Copy 2 or the written report.

(d) In transmitting test results, you or the C/TPA and the employer must ensure the security of the transmission and limit access to any transmission, storage, or retrieval systems.

(e) MRO reports are not subject to modification or change by anyone other than the MRO, as provided in § 40.149(c).

[65 FR 79526, Dec. 19, 2000, as amended at 66 FR 41953, Aug. 9, 2001]

§ 40.169 Where is other information concerning the role of MROs and the verification process found in this regulation?

You can find more information concerning the role of MROs in several sections of this part:

§ 40.3—Definition.
§§ 40.47–40.49—Correction of form and kit errors.
§ 40.67—Role in direct observation and other atypical test situations.
§ 40.83—Laboratory handling of fatal and correctable flaws.
§ 40.97—Laboratory handling of test results and quantitative values.
§ 40.99—Authorization of longer laboratory retention of specimens.
§ 40.101—Relationship with laboratories; avoidance of conflicts of interest.
§ 40.105—Notification of discrepancies in blind specimen results.
§ 40.171—Request for test of split specimen.
§ 40.187—Action concerning split specimen test results.
§ 40.193—Role in ''shy bladder'' situations.
§ 40.195—Role in cancelling tests.
§§ 40.199–40.203—Documenting errors in tests.
§ 40.327—Confidentiality and release of information.
§ 40.347—Transfer of records.
§ 40.353—Relationships with service agents.

Subpart H—Split Specimen Tests

§ 40.171 How does an employee request a test of a split specimen?

(a) As an employee, when the MRO has notified you that you have a verified positive drug test and/or refusal to test because of adulteration or substitution, you have 72 hours from the time of notification to request a test of the split specimen. The request may be verbal or in writing. If you make this request to the MRO within 72 hours, you trigger the requirements of this section for a test of the split specimen. There is no split specimen testing for an invalid result.

(b)(1) If, as an employee, you have not requested a test of the split specimen within 72 hours, you may present to the MRO information documenting that serious injury, illness, lack of actual notice of the verified test result, inability to contact the MRO (*e.g.*, there was no one in the MRO's office and the answering machine was not working), or other circumstances unavoidably prevented you from making a timely request.

(2) As the MRO, if you conclude from the employee's information that there was a legitimate reason for the employee's failure to contact you within 72 hours, you must direct that the test of the split specimen take place, just as you would when there is a timely request.

(c) When the employee makes a timely request for a test of the split specimen under paragraphs (a) and (b) of this section, you must, as the MRO, immediately provide written notice to the laboratory that tested the primary specimen, directing the laboratory to forward the split specimen to a second HHS-certified laboratory. You must also document the date and time of the employee's request.

[65 FR 79526, Dec. 19, 2000, as amended at 73 FR 35972, June 25, 2008]

§ 40.173 Who is responsible for paying for the test of a split specimen?

(a) As the employer, you are responsible for making sure (*e.g.,* by establishing appropriate accounts with laboratories for testing split specimens) that the MRO, first laboratory, and second laboratory perform the functions noted in §§ 40.175–40.185 in a timely manner, once the employee has made a timely request for a test of the split specimen.

(b) As the employer, you must not condition your compliance with these requirements on the employee's direct payment to the MRO or laboratory or the employee's agreement to reimburse you for the costs of testing. For example, if you ask the employee to pay for some or all of the cost of testing the split specimen, and the employee is unwilling or unable to do so, you must ensure that the test takes place in a timely manner, even though this means that you pay for it.

(c) As the employer, you may seek payment or reimbursement of all or part of the cost of the split specimen from the employee (*e.g.,* through your written company policy or a collective bargaining agreement). This part takes no position on who ultimately pays the cost of the test, so long as the employer ensures that the testing is conducted as required and the results released appropriately.

§ 40.175 What steps does the first laboratory take with a split specimen?

(a) As the laboratory at which the primary and split specimen first arrive, you must check to see whether the split specimen is available for testing.

(b) If the split specimen is unavailable or appears insufficient, you must then do the following:

(1) Continue the testing process for the primary specimen as you would normally. Report the results for the primary specimen without providing the MRO information regarding the unavailable split specimen.

(2) Upon receiving a letter from the MRO instructing you to forward the split specimen to another laboratory for testing, report to the MRO that the split specimen is unavailable for testing. Provide as much information as you can about the cause of the unavailability.

(c) As the laboratory that tested the primary specimen, you are not authorized to open the split specimen under any circumstances (except when the split specimen is redesignated as provided in § 40.83).

(d) When you receive written notice from the MRO instructing you to send the split specimen to another HHS-certified laboratory, you must forward the following items to the second laboratory:

(1) The split specimen in its original specimen bottle, with the seal intact;

(2) A copy of the MRO's written request; and

(3) A copy of Copy 1 of the CCF, which identifies the drug(s)/metabolite(s) or the validity criteria to be tested for.

(e) You must not send to the second laboratory any information about the identity of the employee. Inadvertent disclosure does not, however, cause a fatal flaw.

(f) This subpart does not prescribe who gets to decide which HHS-certified laboratory is used to test the split specimen. That decision is left to the parties involved.

§ 40.177 What does the second laboratory do with the split specimen when it is tested to reconfirm the presence of a drug or drug metabolite?

(a) As the laboratory testing the split specimen, you must test the split specimen for the drug(s)/drug metabolite(s) detected in the primary specimen.

(b) You must conduct this test without regard to the cutoff concentrations of § 40.87.

(c) If the test fails to reconfirm the presence of the drug(s)/drug metabolite(s) that were reported positive in the primary specimen, you must conduct validity tests in an attempt to determine the reason for being unable to reconfirm the presence of the drug(s)/metabolite(s). You should conduct the same validity tests as you would conduct on a primary specimen set forth in § 40.91.

(d) In addition, if the test fails to reconfirm the presence of the drug(s)/

drug metabolite(s) reported in the primary specimen, you may send the specimen or an aliquot of it for testing at another HHS-certified laboratory that has the capability to conduct another reconfirmation test.

[65 FR 79526, Dec. 19, 2000, as amended at 73 FR 35972, June 25, 2008]

§ 40.179 What does the second laboratory do with the split specimen when it is tested to reconfirm an adulterated test result?

(a) As the laboratory testing the split specimen, you must test the split specimen for the adulterant detected in the primary specimen, using the confirmatory test for the adulterant and using criteria in § 40.95 and confirmatory cutoff levels required by the HHS Mandatory Guidelines.

(b) In addition, if the test fails to reconfirm the adulterant result reported in the primary specimen, you may send the specimen or an aliquot of it for testing at another HHS-certified laboratory that has the capability to conduct another reconfirmation test.

[73 FR 35973, June 25, 2008]

§ 40.181 What does the second laboratory do with the split specimen when it is tested to reconfirm a substituted test result?

As the laboratory testing the split specimen, you must test the split specimen using the confirmatory tests for creatinine and specific gravity, and using the confirmatory criteria set forth in § 40.93(b).

[73 FR 35973, June 25, 2008]

§ 40.183 What information do laboratories report to MROs regarding split specimen results?

(a) As the laboratory responsible for testing the split specimen, you must report split specimen test results by checking the ''Reconfirmed'' box and/or the ''Failed to Reconfirm'' box (Step 5(b)) on Copy 1 of the CCF, as appropriate, and by providing clarifying remarks using current HHS Mandatory Guidelines requirements.

(b) As the laboratory certifying scientist, enter your name, sign, and date the CCF.

[65 FR 79526, Dec. 19, 2000, as amended at 73 FR 35972, June 25, 2008]

§ 40.185 Through what methods and to whom must a laboratory report split specimen results?

(a) As the laboratory testing the split specimen, you must report laboratory results directly, and only, to the MRO at his or her place of business. You must not report results to or through the DER or another service agent (*e.g.*, a C/TPA).

(b) You must fax, courier, mail, or electronically transmit a legible image or copy of the fully-completed Copy 1 of the CCF, which has been signed by the certifying scientist.

(c) You must transmit the laboratory result to the MRO immediately, preferably on the same day or next business day as the result is signed and released.

§ 40.187 What does the MRO do with split specimen laboratory results?

As the MRO, the split specimen laboratory results you receive will fall into five categories. You must take the following action, as appropriate, when a laboratory reports split specimen results to you.

(a) *Category 1:* The laboratory reconfirmed one or more of the primary specimen results. As the MRO, you must report to the DER and the employee the result(s) that was/were reconfirmed.

(1) In the case of a reconfirmed positive test(s) for drug(s) or drug metabolite(s), the positive is the final result.

(2) In the case of a reconfirmed adulterated or substituted result, the refusal to test is the final result.

(3) In the case of a combination positive and refusal to test results, the final result is both positive and refusal to test.

(b) *Category 2:* The laboratory failed to reconfirm all of the primary specimen results because, as appropriate, drug(s)/drug metabolite(s) were not detected; adulteration criteria were not met; and/or substitution criteria were not met. As the MRO, you must report

to the DER and the employee that the test must be cancelled.

(1) As the MRO, you must inform ODAPC of the failure to reconfirm using the format in Appendix D to this part.

(2) In a case where the split failed to reconfirm because the substitution criteria were not met and the split specimen creatinine concentration was equal to or greater than 2mg/dL but less than or equal to 5mg/dL, as the MRO, you must, in addition to step (b)(1) of this paragraph, direct the DER to ensure the immediate collection of another specimen from the employee under direct observation, with no notice given to the employee of this collection requirement until immediately before the collection.

(3) In a case where the split failed to reconfirm and the primary specimen's result was also invalid, direct the DER to ensure the immediate collection of another specimen from the employee under direct observation, with no notice given to the employee of this collection requirement until immediately before the collection.

(c) *Category 3:* The laboratory failed to reconfirm all of the primary specimen results, and also reported that the split specimen was invalid, adulterated, and/or substituted.

(1) In the case where the laboratory failed to reconfirm all of the primary specimen results and the split was reported as invalid, as the MRO, you must:

(i) Report to the DER and the employee that the test must be cancelled and the reason for the cancellation.

(ii) Direct the DER to ensure the immediate collection of another specimen from the employee under direct observation, with no notice given to the employee of this collection requirement until immediately before the collection.

(iii) Inform ODAPC of the failure to reconfirm using the format in Appendix D to this part.

(2) In the case where the laboratory failed to reconfirm any of the primary specimen results, and the split was reported as adulterated and/or substituted, as the MRO, you must:

(i) Contact the employee and inform the employee that the laboratory has determined that his or her split specimen is adulterated and/or substituted, as appropriate.

(ii) Follow the procedures of § 40.145 to determine if there is a legitimate medical explanation for the laboratory finding of adulteration and/or substitution, as appropriate.

(iii) If you determine that there is a legitimate medical explanation for the adulterated and/or substituted test result, report to the DER and the employee that the test must be cancelled; and inform ODAPC of the failure to reconfirm using the format in Appendix D to this part.

(iv) If you determine that there is not a legitimate medical explanation for the adulterated and/or substituted test result, you must take the following steps:

(A) Report the test to the DER and the employee as a verified refusal to test. Inform the employee that he or she has 72 hours to request a test of the primary specimen to determine if the adulterant found in the split specimen is also present in the primary specimen and/or to determine if the primary specimen meets appropriate substitution criteria.

(B) Except when the request is for a test of the primary specimen and is being made to the laboratory that tested the primary specimen, follow the procedures of §§ 40.153, 40.171, 40.173, 40.179, 40.181, and 40.185, as appropriate.

(C) As the laboratory that tests the primary specimen to reconfirm the presence of the adulterant found in the split specimen and/or to determine that the primary specimen meets appropriate substitution criteria, report your result to the MRO on a photocopy (faxed, mailed, scanned, couriered) of Copy 1 of the CCF.

(D) If the test of the primary specimen reconfirms the adulteration and/or substitution finding of the split specimen, as the MRO you must report the result as a refusal to test as provided in paragraph (a)(2) of this section.

(E) If the test of the primary specimen fails to reconfirm the adulteration and/or substitution finding of the split specimen, as the MRO you must cancel the test, following procedures in paragraph (b) of this section.

(d) *Category 4:* The laboratory failed to reconfirm one or more but not all of the primary specimen results, and also reported that the split specimen was invalid, adulterated, and/or substituted. As the MRO, in the case where the laboratory reconfirmed one or more of the primary specimen result(s), you must follow procedures in paragraph (a) of this section and:

(1) Report that the split was also reported as being invalid, adulterated, and/or substituted (as appropriate).

(2) Inform the DER to take action only on the reconfirmed result(s).

(e) *Category 5:* The split specimen was not available for testing or there was no split laboratory available to test the specimen. As the MRO, you must:

(1) Report to the DER and the employee that the test must be cancelled and the reason for the cancellation;

(2) Direct the DER to ensure the immediate recollection of another specimen from the employee under direct observation, with no notice given to the employee of this collection requirement until immediately before the collection; and

(3) Notify ODAPC of the failure to reconfirm using the format in Appendix D to this part.

(f) For all split specimen results, as the MRO you must:

(1) Enter your name, sign, and date (Step 7) of Copy 2 of the CCF.

(2) Send a legible copy of Copy 2 of the CCF (or a signed and dated letter, see § 40.163) to the employer and keep a copy for your records. Transmit the document as provided in § 40.167.

[73 FR 35973, June 25, 2008]

§ 40.189 Where is other information concerning split specimens found in this regulation?

You can find more information concerning split specimens in several sections of this part:

§ 40.3—Definition.
§ 40.65—Quantity of split specimen.
§ 40.67—Directly observed test when split specimen is unavailable.
§§ 40.71–40.73—Collection process for split specimens.
§ 40.83—Laboratory accessioning of split specimens.
§ 40.99—Laboratory retention of split specimens.
§ 40.103—Blind split specimens.
§ 40.153—MRO notice to employees on tests of split specimen.
§§ 40.193 and 40.201—MRO actions on insufficient or unavailable split specimens.
APPENDIX D TO PART 40—REPORT FORMAT FOR SPLIT SPECIMEN FAILURE TO RECONFIRM.

Subpart I—Problems in Drug Tests

§ 40.191 What is a refusal to take a DOT drug test, and what are the consequences?

(a) As an employee, you have refused to take a drug test if you:

(1) Fail to appear for any test (except a pre-employment test) within a reasonable time, as determined by the employer, consistent with applicable DOT agency regulations, after being directed to do so by the employer. This includes the failure of an employee (including an owner-operator) to appear for a test when called by a C/TPA (see § 40.61(a));

(2) *Fail to remain at the testing site until the testing process is complete; Provided,* That an employee who leaves the testing site before the testing process commences (see § 40.63 (c)) for a pre-employment test is not deemed to have refused to test;

(3) Fail to provide a urine specimen for any drug test required by this part or DOT agency regulations; *Provided,* That an employee who does not provide a urine specimen because he or she has left the testing site before the testing process commences (see § 40.63 (c)) for a pre-employment test is not deemed to have refused to test;

(4) In the case of a directly observed or monitored collection in a drug test, fail to permit the observation or monitoring of your provision of a specimen (see §§ 40.67(l) and 40.69(g));

(5) Fail to provide a sufficient amount of urine when directed, and it has been determined, through a required medical evaluation, that there was no adequate medical explanation for the failure (see § 40.193(d)(2));

(6) Fail or decline to take an additional drug test the employer or collector has directed you to take (see, for instance, § 40.197(b));

(7) Fail to undergo a medical examination or evaluation, as directed by the MRO as part of the verification process, or as directed by the DER under § 40.193(d). In the case of a pre-

employment drug test, the employee is deemed to have refused to test on this basis only if the pre-employment test is conducted following a contingent offer of employment. If there was no contingent offer of employment, the MRO will cancel the test; or

(8) Fail to cooperate with any part of the testing process (e.g., refuse to empty pockets when directed by the collector, behave in a confrontational way that disrupts the collection process, fail to wash hands after being directed to do so by the collector).

(9) For an observed collection, fail to follow the observer's instructions to raise your clothing above the waist, lower clothing and underpants, and to turn around to permit the observer to determine if you have any type of prosthetic or other device that could be used to interfere with the collection process.

(10) Possess or wear a prosthetic or other device that could be used to interfere with the collection process.

(11) Admit to the collector or MRO that you adulterated or substituted the specimen.

(b) As an employee, if the MRO reports that you have a verified adulterated or substituted test result, you have refused to take a drug test.

(c) As an employee, if you refuse to take a drug test, you incur the consequences specified under DOT agency regulations for a violation of those DOT agency regulations.

(d) As a collector or an MRO, when an employee refuses to participate in the part of the testing process in which you are involved, you must terminate the portion of the testing process in which you are involved, document the refusal on the CCF (including, in the case of the collector, printing the employee's name on Copy 2 of the CCF), immediately notify the DER by any means (e.g., telephone or secure fax machine) that ensures that the refusal notification is immediately received. As a referral physician (e.g., physician evaluating a ''shy bladder'' condition or a claim of a legitimate medical explanation in a validity testing situation), you must notify the MRO, who in turn will notify the DER.

(1) As the collector, you must note the refusal in the ''Remarks'' line (Step 2), and sign and date the CCF.

(2) As the MRO, you must note the refusal by checking the ''refused to test because'' box (Step 6) on Copy 2 of the CCF, and add the reason on the ''Remarks'' line. You must then sign and date the CCF.

(e) As an employee, when you refuse to take a non-DOT test or to sign a non-DOT form, you have not refused to take a DOT test. There are no consequences under DOT agency regulations for refusing to take a non-DOT test.

[65 FR 79526, Dec. 19, 2000, as amended at 66 FR 41953, Aug. 9, 2001; 68 FR 31626, May 28, 2003; 71 FR 49384, Aug. 23, 2006; 73 FR 35974, June 25, 2008]

§ 40.193 What happens when an employee does not provide a sufficient amount of urine for a drug test?

(a) This section prescribes procedures for situations in which an employee does not provide a sufficient amount of urine to permit a drug test (*i.e.*, 45 mL of urine).

(b) As the collector, you must do the following:

(1) Discard the insufficient specimen, except where the insufficient specimen was out of temperature range or showed evidence of adulteration or tampering (see § 40.65(b) and (c)).

(2) Urge the employee to drink up to 40 ounces of fluid, distributed reasonably through a period of up to three hours, or until the individual has provided a sufficient urine specimen, whichever occurs first. It is not a refusal to test if the employee declines to drink. Document on the Remarks line of the CCF (Step 2), and inform the employee of, the time at which the three-hour period begins and ends.

(3) If the employee refuses to make the attempt to provide a new urine specimen or leaves the collection site before the collection process is complete, you must discontinue the collection, note the fact on the ''Remarks'' line of the CCF (Step 2), and immediately notify the DER. This is a refusal to test.

(4) If the employee has not provided a sufficient specimen within three hours of the first unsuccessful attempt to

provide the specimen, you must discontinue the collection, note the fact on the ''Remarks'' line of the CCF (Step 2), and immediately notify the DER.

(5) Send Copy 2 of the CCF to the MRO and Copy 4 to the DER. You must send or fax these copies to the MRO and DER within 24 hours or the next business day.

(c) As the DER, when the collector informs you that the employee has not provided a sufficient amount of urine (see paragraph (b)(4) of this section), you must, after consulting with the MRO, direct the employee to obtain, within five days, an evaluation from a licensed physician, acceptable to the MRO, who has expertise in the medical issues raised by the employee's failure to provide a sufficient specimen. (The MRO may perform this evaluation if the MRO has appropriate expertise.)

(1) As the MRO, if another physician will perform the evaluation, you must provide the other physician with the following information and instructions:

(i) That the employee was required to take a DOT drug test, but was unable to provide a sufficient amount of urine to complete the test;

(ii) The consequences of the appropriate DOT agency regulation for refusing to take the required drug test;

(iii) That the referral physician must agree to follow the requirements of paragraphs (d) through (g) of this section.

(2) [Reserved]

(d) As the referral physician conducting this evaluation, you must recommend that the MRO make one of the following determinations:

(1) A medical condition has, or with a high degree of probability could have, precluded the employee from providing a sufficient amount of urine. As the MRO, if you accept this recommendation, you must:

(i) Check ''Test Cancelled'' (Step 6) on the CCF; and

(ii) Sign and date the CCF.

(2) There is not an adequate basis for determining that a medical condition has, or with a high degree of probability could have, precluded the employee from providing a sufficient amount of urine. As the MRO, if you accept this recommendation, you must:

(i) Check ''Refusal to test because'' (Step 6) on the CCF and enter reason in the remarks line; and

(ii) Sign and date the CCF.

(e) For purposes of this paragraph, a medical condition includes an ascertainable physiological condition (*e.g.*, a urinary system dysfunction) or a medically documented pre-existing psychological disorder, but does not include unsupported assertions of ''situational anxiety'' or dehydration.

(f) As the referral physician making the evaluation, after completing your evaluation, you must provide a written statement of your recommendations and the basis for them to the MRO. You must not include in this statement detailed information on the employee's medical condition beyond what is necessary to explain your conclusion.

(g) If, as the referral physician making this evaluation in the case of a preemployment test, you determine that the employee's medical condition is a serious and permanent or long-term disability that is highly likely to prevent the employee from providing a sufficient amount of urine for a very long or indefinite period of time, you must set forth your determination and the reasons for it in your written statement to the MRO. As the MRO, upon receiving such a report, you must follow the requirements of § 40.195, where applicable.

(h) As the MRO, you must seriously consider and assess the referral physician's recommendations in making your determination about whether the employee has a medical condition that has, or with a high degree of probability could have, precluded the employee from providing a sufficient amount of urine. You must report your determination to the DER in writing as soon as you make it.

(i) As the employer, when you receive a report from the MRO indicating that a test is cancelled as provided in paragraph (d)(1) of this section, you take no further action with respect to the employee. The employee remains in the random testing pool.

[65 FR 79526, Dec. 19, 2000, as amended at 66 FR 41953, Aug. 9, 2001]

§ 40.195 What happens when an individual is unable to provide a sufficient amount of urine for a pre-employment follow-up or return-to-duty test because of a permanent or long-term medical condition?

(a) This section concerns a situation in which an employee has a medical condition that precludes him or her from providing a sufficient specimen for a pre-employment follow-up or return-to-duty test and the condition involves a permanent or long-term disability. As the MRO in this situation, you must do the following:

(1) You must determine if there is clinical evidence that the individual is an illicit drug user. You must make this determination by personally conducting, or causing to be conducted, a medical evaluation and through consultation with the employee's physician and/or the physician who conducted the evaluation under § 40.193(d).

(2) If you do not personally conduct the medical evaluation, you must ensure that one is conducted by a licensed physician acceptable to you.

(3) For purposes of this section, the MRO or the physician conducting the evaluation may conduct an alternative test (*e.g.*, blood) as part of the medically appropriate procedures in determining clinical evidence of drug use.

(b) If the medical evaluation reveals no clinical evidence of drug use, as the MRO, you must report the result to the employer as a negative test with written notations regarding results of both the evaluation conducted under § 40.193(d) and any further medical examination. This report must state the basis for the determination that a permanent or long-term medical condition exists, making provision of a sufficient urine specimen impossible, and for the determination that no signs and symptoms of drug use exist.

(1) Check ''Negative'' (Step 6) on the CCF.

(2) Sign and date the CCF.

(c) If the medical evaluation reveals clinical evidence of drug use, as the MRO, you must report the result to the employer as a cancelled test with written notations regarding results of both the evaluation conducted under § 40.193(d) and any further medical examination. This report must state that a permanent or long-term medical condition exists, making provision of a sufficient urine specimen impossible, and state the reason for the determination that signs and symptoms of drug use exist. Because this is a cancelled test, it does not serve the purposes of a negative test (*i.e.*, the employer is not authorized to allow the employee to begin or resume performing safety-sensitive functions, because a negative test is needed for that purpose).

(d) For purposes of this section, permanent or long-term medical conditions are those physiological, anatomic, or psychological abnormalities documented as being present prior to the attempted collection, and considered not amenable to correction or cure for an extended period of time, if ever.

(1) Examples would include destruction (any cause) of the glomerular filtration system leading to renal failure; unrepaired traumatic disruption of the urinary tract; or a severe psychiatric disorder focused on genito-urinary matters.

(2) Acute or temporary medical conditions, such as cystitis, urethritis or prostatitis, though they might interfere with collection for a limited period of time, cannot receive the same exceptional consideration as the permanent or long-term conditions discussed in paragraph (d)(1) of this section.

[65 FR 79526, Dec. 19, 2000, as amended at 66 FR 41953, Aug. 9, 2001]

§ 40.197 What happens when an employer receives a report of a dilute specimen?

(a) As the employer, if the MRO informs you that a positive drug test was dilute, you simply treat the test as a verified positive test. You must not direct the employee to take another test based on the fact that the specimen was dilute.

(b) As an employer, if the MRO informs you that a negative test was dilute, take the following action:

(1) If the MRO directs you to conduct a recollection under direct observation (*i.e.*, because the creatinine concentration of the specimen was equal to or greater than 2mg/dL, but less than or equal to 5 mg/dL (*see* § 40.155(c)), you must do so immediately.

(2) Otherwise (*i.e.*, if the creatinine concentration of the dilute specimen is greater than 5 mg/dL), you may, but are not required to, direct the employee to take another test immediately.

(i) Such recollections must not be collected under direct observation, unless there is another basis for use of direct observation (see § 40.67 (b) and (c)).

(ii) You must treat all employees the same for this purpose. For example, you must not retest some employees and not others. You may, however, establish different policies for different types of tests (*e.g.*, conduct retests in pre-employment situations, but not in random test situations). You must inform your employees in advance of your decisions on these matters.

(c) The following provisions apply to all tests you direct an employee to take under paragraph (b) of this section:

(1) You must ensure that the employee is given the minimum possible advance notice that he or she must go to the collection site;

(2) You must treat the result of the test you directed the employee to take under paragraph (b) of this section—and not a prior test—as the test result of record, on which you rely for purposes of this part;

(3) If the result of the test you directed the employee to take under paragraph (b)(1) of this section is also negative and dilute, you are not permitted to make the employee take an additional test because the result was dilute.

(4) If the result of the test you directed the employee to take under paragraph (b)(2) of this section is also negative and dilute, you are not permitted to make the employee take an additional test because the result was dilute. Provided, however, that if the MRO directs you to conduct a recollection under direct observation under paragraph (b)(1) of this section, you must immediately do so.

(5) If the employee declines to take a test you directed him or her to take under paragraph (b) of this section, the employee has refused the test for purposes of this part and DOT agency regulations.

[68 FR 31626, May 28, 2003, as amended at 69 FR 64867, Nov. 9, 2004; 73 FR 35974, June 25, 2008]

§ 40.199 What problems always cause a drug test to be cancelled?

(a) As the MRO, when the laboratory discovers a ''fatal flaw'' during its processing of incoming specimens (see § 40.83), the laboratory will report to you that the specimen has been ''Rejected for Testing'' (with the reason stated). You must always cancel such a test.

(b) The following are ''fatal flaws'':

(1) There is no printed collector's name *and* no collector's signature;

(2) The specimen ID numbers on the specimen bottle and the CCF do not match;

(3) The specimen bottle seal is broken or shows evidence of tampering (and a split specimen cannot be redesignated, see § 40.83(g)); and

(4) Because of leakage or other causes, there is an insufficient amount of urine in the primary specimen bottle for analysis and the specimens cannot be redesignated (see § 40.83(g)).

(c) You must report the result as provided in § 40.161 .

§ 40.201 What problems always cause a drug test to be cancelled and may result in a requirement for another collection?

As the MRO, you must cancel a drug test when a laboratory reports that any of the following problems have occurred. You must inform the DER that the test was cancelled. You must also direct the DER to ensure that an additional collection occurs immediately, if required by the applicable procedures specified in paragraphs (a) through (e) of this section.

(a) The laboratory reports an ''Invalid Result.'' You must follow applicable procedures in § 40.159 (recollection under direct observation may be required).

(b) The laboratory reports the result as ''Rejected for Testing.'' You must follow applicable procedures in § 40.161 (a recollection may be required).

(c) The laboratory reports that the split specimen failed to reconfirm all of

the primary specimen results because the drug(s)/drug metabolite(s) were not detected; adulteration criteria were not met; and/or substitution criteria were not met. You must follow the applicable procedures in §40.187(b)—no recollection is required in this case, unless the split specimen creatinine concentration for a substituted primary specimen was greater than or equal to 2mg/dL but less than or equal to 5mg/ dL, or the primary specimen had an invalid result which was not reported to the DER. Both these cases require recollection under direct observation.

(d) The laboratory reports that the split specimen failed to reconfirm all of the primary specimen results, and that the split specimen was invalid. You must follow the procedures in §40.187(c)(1)—recollection under direct observation is required in this case.

(e) The laboratory reports that the split specimen failed to reconfirm all of the primary specimen results because the split specimen was not available for testing or there was no split laboratory available to test the specimen. You must follow the applicable procedures in §40.187(e)—recollection under direct observation is required in this case.

(f) The examining physician has determined that there is an acceptable medical explanation of the employee's failure to provide a sufficient amount of urine. You must follow applicable procedures in §40.193(d)(1) (no recollection is required in this case).

[65 FR 79526, Dec. 19, 2000, as amended at 73 FR 35974, June 25, 2008]

§40.203 What problems cause a drug test to be cancelled unless they are corrected?

(a) As the MRO, when a laboratory discovers a ''correctable flaw'' during its processing of incoming specimens (see §40.83), the laboratory will attempt to correct it. If the laboratory is unsuccessful in this attempt, it will report to you that the specimen has been ''Rejected for Testing'' (with the reason stated).

(b) The following is a ''correctable flaw'' that laboratories must attempt to correct: The collector's signature is omitted on the certification statement on the CCF.

(c) As the MRO, when you discover a ''correctable flaw'' during your review of the CCF, you must cancel the test unless the flaw is corrected.

(d) The following are correctable flaws that you must attempt to correct:

(1) The employee's signature is omitted from the certification statement, unless the employee's failure or refusal to sign is noted on the ''Remarks'' line of the CCF.

(2) The certifying scientist's signature is omitted on the laboratory copy of the CCF for a positive, adulterated, substituted, or invalid test result.

(3) The collector uses a non-Federal form or an expired Federal form for the test. This flaw may be corrected through the procedure set forth in §40.205(b)(2), provided that the collection testing process has been conducted in accordance with the procedures of this part in an HHS-certified laboratory. During the period August 1–October 31, 2001, you are not required to cancel a test because of the use of an expired Federal form. Beginning November 1, 2001, if the problem is not corrected, you must cancel the test.

[65 FR 79526, Dec. 19, 2000, as amended at 66 FR 41954, Aug. 9, 2001]

§40.205 How are drug test problems corrected?

(a) As a collector, you have the responsibility of trying to successfully complete a collection procedure for each employee.

(1) If, during or shortly after the collection process, you become aware of any event that prevents the completion of a valid test or collection (*e.g.*, a procedural or paperwork error), you must try to correct the problem promptly, if doing so is practicable. You may conduct another collection as part of this effort.

(2) If another collection is necessary, you must begin the new collection procedure as soon as possible, using a new CCF and a new collection kit.

(b) If, as a collector, laboratory, MRO, employer, or other person implementing these drug testing regulations, you become aware of a problem that can be corrected (see §40.203), but

which has not already been corrected under paragraph (a) of this section, you must take all practicable action to correct the problem so that the test is not cancelled.

(1) If the problem resulted from the omission of required information, you must, as the person responsible for providing that information, supply in writing the missing information and a statement that it is true and accurate. For example, suppose you are a collector, and you forgot to make a notation on the ''Remarks'' line of the CCF that the employee did not sign the certification. You would, when the problem is called to your attention, supply a signed statement that the employee failed or refused to sign the certification and that your statement is true and accurate. You must supply this information on the same business day on which you are notified of the problem, transmitting it by fax or courier.

(2) If the problem is the use of a non-Federal form or an expired Federal form, you must provide a signed statement (i.e., a memorandum for the record). It must state that the incorrect form contains all the information needed for a valid DOT drug test, and that the incorrect form was used inadvertently or as the only means of conducting a test, in circumstances beyond your control. The statement must also list the steps you have taken to prevent future use of non-Federal forms or expired Federal forms for DOT tests. For this flaw to be corrected, the test of the specimen must have occurred at a HHS-certified laboratory where it was tested consistent with the requirements of this part. You must supply this information on the same business day on which you are notified of the problem, transmitting it by fax or courier.

(3) You must maintain the written documentation of a correction with the CCF.

(4) You must mark the CCF in such a way (*e.g.*, stamp noting correction) as to make it obvious on the face of the CCF that you corrected the flaw.

(c) If the correction does not take place, as the MRO you must cancel the test.

[65 FR 79526, Dec. 19, 2000, as amended at 66 FR 41954, Aug. 9, 2001]

§ 40.207 What is the effect of a cancelled drug test?

(a) A cancelled drug test is neither positive nor negative.

(1) As an employer, you must not attach to a cancelled test the consequences of a positive test or other violation of a DOT drug testing regulation (*e.g.*, removal from a safety-sensitive position).

(2) As an employer, you must not use a cancelled test for the purposes of a negative test to authorize the employee to perform safety-sensitive functions (*i.e.*, in the case of a pre-employment, return-to-duty, or follow-up test).

(3) However, as an employer, you must not direct a recollection for an employee because a test has been cancelled, except in the situations cited in paragraph (a)(2) of this section or other provisions of this part that require another test to be conducted (*e.g.*, §§ 40.159(a)(5) and 40.187(b)(2), (c)(1), and (e).

(b) A cancelled test does not count toward compliance with DOT requirements (*e.g.*, being applied toward the number of tests needed to meet the employer's minimum random testing rate).

(c) A cancelled DOT test does not provide a valid basis for an employer to conduct a non-DOT test (*i.e.*, a test under company authority).

[65 FR 79526, Dec. 19, 2000, as amended at 73 FR 35975, June 25, 2008]

§ 40.208 What problem requires corrective action but does not result in the cancellation of a test?

(a) If, as a laboratory, collector, employer, or other person implementing the DOT drug testing program, you become aware that the specimen temperature on the CCF was not checked and the ''Remarks'' line did not contain an entry regarding the temperature being out of range, you must take corrective action, including securing a memorandum for the record explaining the problem and taking appropriate action to ensure that the problem does not recur.

(b) This error does not result in the cancellation of the test.

(c) As an employer or service agent, this error, even though not sufficient

to cancel a drug test result, may subject you to enforcement action under DOT agency regulations or Subpart R of this part.

[66 FR 41954, Aug. 9, 2001]

§ 40.209 What procedural problems do not result in the cancellation of a test and do not require correction?

(a) As a collector, laboratory, MRO, employer or other person administering the drug testing process, you must document any errors in the testing process of which you become aware, even if they are not considered problems that will cause a test to be cancelled as listed in this subpart. Decisions about the ultimate impact of these errors will be determined by other administrative or legal proceedings, subject to the limitations of paragraph (b) of this section.

(b) No person concerned with the testing process may declare a test cancelled based on an error that does not have a significant adverse effect on the right of the employee to have a fair and accurate test. Matters that do not result in the cancellation of a test include, but are not limited to, the following:

(1) A minor administrative mistake (*e.g.*, the omission of the employee's middle initial, a transposition of numbers in the employee's social security number);

(2) An error that does not affect employee protections under this part (*e.g.*, the collector's failure to add bluing agent to the toilet bowl, which adversely affects only the ability of the collector to detect tampering with the specimen by the employee);

(3) The collection of a specimen by a collector who is required to have been trained (see § 40.33), but who has not met this requirement;

(4) A delay in the collection process (see § 40.61(a));

(5) Verification of a test result by an MRO who has the basic credentials to be qualified as an MRO (see § 40.121(a) through (b)) but who has not met training and/or documentation requirements (see § 40.121(c) through (e));

(6) The failure to directly observe or monitor a collection that the rule requires or permits to be directly observed or monitored, or the unauthorized use of direct observation or monitoring for a collection;

(7) The fact that a test was conducted in a facility that does not meet the requirements of § 40.41;

(8) If the specific name of the courier on the CCF is omitted or erroneous;

(9) Personal identifying information is inadvertently contained on the CCF (*e.g.*, the employee signs his or her name on the laboratory copy); or

(10) Claims that the employee was improperly selected for testing.

(c) As an employer or service agent, these types of errors, even though not sufficient to cancel a drug test result, may subject you to enforcement action under DOT agency regulations or action under Subpart R of this part.

[65 FR 79526, Dec. 19, 2000, as amended at 66 FR 41954, Aug. 9, 2001]

Subpart J—Alcohol Testing Personnel

§ 40.211 Who conducts DOT alcohol tests?

(a) Screening test technicians (STTs) and breath alcohol technicians (BATs) meeting their respective requirements of this subpart are the only people authorized to conduct DOT alcohol tests.

(b) An STT can conduct only alcohol screening tests, but a BAT can conduct alcohol screening and confirmation tests.

(c) As a BAT- or STT-qualified immediate supervisor of a particular employee, you may not act as the STT or BAT when that employee is tested, unless no other STT or BAT is available and DOT agency regulations do not prohibit you from doing so.

§ 40.213 What training requirements must STTs and BATs meet?

To be permitted to act as a BAT or STT in the DOT alcohol testing program, you must meet each of the requirements of this section:

(a) *Basic information.* You must be knowledgeable about the alcohol testing procedures in this part and the current DOT guidance. These documents and information are available from ODAPC (Department of Transportation, 400 7th Street, SW., Room 10403, Washington DC, 20590, 202–366–3784, or

on the ODAPC web site, *http://www.dot.gov/ost/dapc*)).

(b) *Qualification training.* You must receive qualification training meeting the requirements of this paragraph (b).

(1) Qualification training must be in accordance with the DOT Model BAT or STT Course, as applicable. The DOT Model Courses are available from ODAPC (Department of Transportation, 1200 New Jersey Avenue, SE., Washington DC, 20590, 202–366–3784, or on the ODAPC web site, *http://www.dot.gov/ost/dapc*). The training can also be provided using a course of instruction equivalent to the DOT Model Courses. On request, ODAPC will review BAT and STT instruction courses for equivalency.

(2) Qualification training must include training to proficiency in using the alcohol testing procedures of this part and in the operation of the particular alcohol testing device(s) (*i.e.*, the ASD(s) or EBT(s)) you will be using.

(3) The training must emphasize that you are responsible for maintaining the integrity of the testing process, ensuring the privacy of employees being tested, and avoiding conduct or statements that could be viewed as offensive or inappropriate.

(4) The instructor must be an individual who has demonstrated necessary knowledge, skills, and abilities by regularly conducting DOT alcohol tests as an STT or BAT, as applicable, for a period of at least a year, who has conducted STT or BAT training, as applicable, under this part for a year, or who has successfully completed a ''train the trainer'' course.

(c) *Initial Proficiency Demonstration.* Following your completion of qualification training under paragraph (b) of this section, you must demonstrate proficiency in alcohol testing under this part by completing seven consecutive error-free mock tests (BATs) or five consecutive error-free tests (STTs).

(1) Another person must monitor and evaluate your performance, in person or by a means that provides real-time observation and interaction between the instructor and trainee, and attest in writing that the mock collections are ''error-free.'' This person must be an individual who meets the requirements of paragraph (b)(4) of this section.

(2) These tests must use the alcohol testing devices (*e.g.*, EBT(s) or ASD(s)) that you will use as a BAT or STT.

(3) If you are an STT who will be using an ASD that indicates readings by changes, contrasts, or other readings in color, you must demonstrate as part of the mock test that you are able to discern changes, contrasts, or readings correctly.

(d) *Schedule for qualification training and initial proficiency demonstration.* The following is the schedule for qualification training and the initial proficiency demonstration you must meet:

(1) If you became a BAT or STT before August 1, 2001, you were required to have met the requirements set forth in paragraphs (b) and (c) of this section, and you do not have to meet them again.

(2) If you become a BAT or STT on or after August 1, 2001, you must meet the requirements of paragraphs (b) and (c) of this section before you begin to perform BAT or STT functions.

(e) *Refresher training.* No less frequently than every five years from the date on which you satisfactorily complete the requirements of paragraphs (b) and (c) of this section, you must complete refresher training that meets all the requirements of paragraphs (b) and (c) of this section. If you are a BAT or STT who completed qualification training before January 1, 1998, you are not required to complete refresher training until January 1, 2003.

(f) *Error Correction Training.* If you make a mistake in the alcohol testing process that causes a test to be cancelled (*i.e.*, a fatal or uncorrected flaw), you must undergo error correction training. This training must occur within 30 days of the date you are notified of the error that led to the need for retraining.

(1) Error correction training must be provided and your proficiency documented in writing by a person who meets the requirements of paragraph (b)(4) of this section.

(2) Error correction training is required to cover only the subject matter area(s) in which the error that caused the test to be cancelled occurred.

(3) As part of the error correction training, you must demonstrate your proficiency in the alcohol testing procedures of this part by completing three consecutive error-free mock tests. The mock tests must include one uneventful scenario and two scenarios related to the area(s) in which your error(s) occurred. The person providing the training must monitor and evaluate your performance and attest in writing that the mock tests were error-free.

(g) *Documentation.* You must maintain documentation showing that you currently meet all requirements of this section. You must provide this documentation on request to DOT agency representatives and to employers and C/TPAs who are negotiating to use your services.

(h) *Other persons who may serve as BATs or STTs.* (1) Anyone meeting the requirements of this section to be a BAT may act as an STT, provided that the individual has demonstrated initial proficiency in the operation of the ASD that he or she is using, as provided in paragraph (c) of this section.

(2) Law enforcement officers who have been certified by state or local governments to conduct breath alcohol testing are deemed to be qualified as BATs. They are not required to also complete the training requirements of this section in order to act as BATs. In order for a test conducted by such an officer to be accepted under DOT alcohol testing requirements, the officer must have been certified by a state or local government to use the EBT or ASD that was used for the test.

[65 FR 79526, Dec. 19, 2000, as amended at 66 FR 41954, Aug. 9, 2001]

§ 40.215 What information about the DER do employers have to provide to BATs and STTs?

As an employer, you must provide to the STTs and BATs the name and telephone number of the appropriate DER (and C/TPA, where applicable) to contact about any problems or issues that may arise during the testing process.

§ 40.217 Where is other information on the role of STTs and BATs found in this regulation?

You can find other information on the role and functions of STTs and BATs in the following sections of this part:

§ 40.3—Definitions.
§ 40.223—Responsibility for supervising employees being tested.
§§ 40.225–40.227—Use of the alcohol testing form.
§§ 40.241–40.245—Screening test procedures with ASDs and EBTs.
§§ 40.251–40.255—Confirmation test procedures.
§ 40.261—Refusals to test.
§§ 40.263–40.265—Insufficient saliva or breath.
§ 40.267—Problems requiring cancellation of tests.
§§ 40.269–40.271—Correcting problems in tests.

Subpart K—Testing Sites, Forms, Equipment and Supplies Used in Alcohol Testing

§ 40.221 Where does an alcohol test take place?

(a) A DOT alcohol test must take place at an alcohol testing site meeting the requirements of this section.

(b) If you are operating an alcohol testing site, you must ensure that it meets the security requirements of § 40.223.

(c) If you are operating an alcohol testing site, you must ensure that it provides visual and aural privacy to the employee being tested, sufficient to prevent unauthorized persons from seeing or hearing test results.

(d) If you are operating an alcohol testing site, you must ensure that it has all needed personnel, materials, equipment, and facilities to provide for the collection and analysis of breath and/or saliva samples, and a suitable clean surface for writing.

(e) If an alcohol testing site fully meeting all the visual and aural privacy requirements of paragraph (c) is not readily available, this part allows a reasonable suspicion or post-accident test to be conducted at a site that partially meets these requirements. In this case, the site must afford visual and aural privacy to the employee to the greatest extent practicable.

(f) An alcohol testing site can be in a medical facility, a mobile facility (*e.g.*,

a van), a dedicated collection facility, or any other location meeting the requirements of this section.

§ 40.223 What steps must be taken to protect the security of alcohol testing sites?

(a) If you are a BAT, STT, or other person operating an alcohol testing site, you must prevent unauthorized personnel from entering the testing site.

(1) The only people you are to treat as authorized persons are employees being tested, BATs, STTs, and other alcohol testing site workers, DERs, employee representatives authorized by the employer (*e.g.*, on the basis of employer policy or labor-management agreement), and DOT agency representatives.

(2) You must ensure that all persons are under the supervision of a BAT or STT at all times when permitted into the site.

(3) You may remove any person who obstructs, interferes with, or causes unnecessary delay in the testing process.

(b) As the BAT or STT, you must not allow any person other than you, the employee, or a DOT agency representative to actually witness the testing process (see §§ 40.241–40.255).

(c) If you are operating an alcohol testing site, you must ensure that when an EBT or ASD is not being used for testing, you store it in a secure place.

(d) If you are operating an alcohol testing site, you must ensure that no one other than BATs or other employees of the site have access to the site when an EBT is unsecured.

(e) As a BAT or STT, to avoid distraction that could compromise security, you are limited to conducting an alcohol test for only one employee at a time.

(1) When an EBT screening test on an employee indicates an alcohol concentration of 0.02 or higher, and the same EBT will be used for the confirmation test, you are not allowed to use the EBT for a test on another employee before completing the confirmation test on the first employee.

(2) As a BAT who will conduct both the screening and the confirmation test, you are to complete the entire screening and confirmation process on one employee before starting the screening process on another employee.

(3) You are not allowed to leave the alcohol testing site while the testing process for a given employee is in progress, except to notify a supervisor or contact a DER for assistance in the case an employee or other person who obstructs, interferes with, or unnecessarily delays the testing process.

§ 40.225 What form is used for an alcohol test?

(a) The DOT Alcohol Testing Form (ATF) must be used for every DOT alcohol test beginning February 1, 2002. The ATF must be a three-part carbonless manifold form. The ATF is found in Appendix G to this part. You may view this form on the ODAPC web site (*http://www.dot.gov/ost/dapc*).

(b) As an employer in the DOT alcohol testing program, you are not permitted to modify or revise the ATF except as follows:

(1) You may include other information needed for billing purposes, outside the boundaries of the form.

(2) You may use a ATF directly generated by an EBT which omits the space for affixing a separate printed result to the ATF, provided the EBT prints the result directly on the ATF.

(3) You may use an ATF that has the employer's name, address, and telephone number preprinted. In addition, a C/TPA's name, address, and telephone number may be included, to assist with negative results.

(4) You may use an ATF in which all pages are printed on white paper. You may modify the ATF by using colored paper, or have clearly discernable borders or designation statements on Copy 2 and Copy 3. When colors are used, they must be green for Copy 2 and blue for Copy 3.

(5) As a BAT or STT, you may add, on the ''Remarks'' line of the ATF, the name of the DOT agency under whose authority the test occurred.

(6) As a BAT or STT, you may use a ATF that has your name, address, and telephone number preprinted, but under no circumstances can your signature be preprinted.

(c) As an employer, you may use an equivalent foreign-language version of the ATF approved by ODAPC. You may use such a non-English language form only in a situation where both the employee and BAT/STT understand and can use the form in that language.

[65 FR 79526, Dec. 19, 2000, as amended at 66 FR 41954, Aug. 9, 2001]

§ 40.227 May employers use the ATF for non-DOT tests, or non-DOT forms for DOT tests?

(a) No, as an employer, BAT, or STT, you are prohibited from using the ATF for non-DOT alcohol tests. You are also prohibited from using non-DOT forms for DOT alcohol tests. Doing either subjects you to enforcement action under DOT agency regulations.

(b) If the STT or BAT, either by mistake, or as the only means to conduct a test under difficult circumstances (*e.g.*, post-accident test with insufficient time to obtain the ATF), uses a non-DOT form for a DOT test, the use of a non-DOT form does not, in and of itself, require the employer or service agent to cancel the test. However, in order for the test to be considered valid, a signed statement must be obtained from the STT or BAT in accordance with § 40.271(b) .

§ 40.229 What devices are used to conduct alcohol screening tests?

EBTs and ASDs on the NHTSA conforming products lists (CPL) for evidential and non-evidential devices are the only devices you are allowed to use to conduct alcohol screening tests under this part. You may use an ASD that is on the NHTSA CPL for DOT alcohol tests only if there are instructions for its use in this part. An ASD can be used only for screening tests for alcohol, and may not be used for confirmation tests.

[65 FR 79526, Dec. 19, 2000, as amended at 66 FR 41954, Aug. 9, 2001]

§ 40.231 What devices are used to conduct alcohol confirmation tests?

(a) EBTs on the NHTSA CPL for evidential devices that meet the requirements of paragraph (b) of this section are the only devices you may use to conduct alcohol confirmation tests under this part. Note that, among devices on the CPL for EBTs, only those devices listed without an asterisk (*) are authorized for use in confirmation testing in the DOT alcohol testing program.

(b) To conduct a confirmation test, you must use an EBT that has the following capabilities:

(1) Provides a printed triplicate result (or three consecutive identical copies of a result) of each breath test;

(2) Assigns a unique number to each completed test, which the BAT and employee can read before each test and which is printed on each copy of the result;

(3) Prints, on each copy of the result, the manufacturer's name for the device, its serial number, and the time of the test;

(4) Distinguishes alcohol from acetone at the 0.02 alcohol concentration level;

(5) Tests an air blank; and

(6) Performs an external calibration check.

§ 40.233 What are the requirements for proper use and care of EBTs?

(a) As an EBT manufacturer, you must submit, for NHTSA approval, a quality assurance plan (QAP) for your EBT before NHTSA places the EBT on the CPL.

(1) Your QAP must specify the methods used to perform external calibration checks on the EBT, the tolerances within which the EBT is regarded as being in proper calibration, and the intervals at which these checks must be performed. In designating these intervals, your QAP must take into account factors like frequency of use, environmental conditions (*e.g.*, temperature, humidity, altitude) and type of operation (*e.g.*, stationary or mobile).

(2) Your QAP must also specify the inspection, maintenance, and calibration requirements and intervals for the EBT.

(b) As the manufacturer, you must include, with each EBT, instructions for its use and care consistent with the QAP.

(c) As the user of the EBT (*e.g.*, employer, service agent), you must do the following:

(1) You must follow the manufacturer's instructions (see paragraph (b) of

this section), including performance of external calibration checks at the intervals the instructions specify.

(2) In conducting external calibration checks, you must use only calibration devices appearing on NHTSA's CPL for ''Calibrating Units for Breath Alcohol Tests.''

(3) If an EBT fails an external check of calibration, you must take the EBT out of service. You may not use the EBT again for DOT alcohol testing until it is repaired and passes an external calibration check.

(4) You must maintain records of the inspection, maintenance, and calibration of EBTs as provided in § 40.333(a)(2) .

(5) You must ensure that inspection, maintenance, and calibration of the EBT are performed by its manufacturer or a maintenance representative certified either by the manufacturer or by a state health agency or other appropriate state agency.

§ 40.235 What are the requirements for proper use and care of ASDs?

(a) As an ASD manufacturer, you must submit, for NHTSA approval, a QAP for your ASD before NHTSA places the ASD on the CPL. Your QAP must specify the methods used for quality control checks, temperatures at which the ASD must be stored and used, the shelf life of the device, and environmental conditions (*e.g.*, temperature, altitude, humidity) that may affect the ASD's performance.

(b) As a manufacturer, you must include with each ASD instructions for its use and care consistent with the QAP. The instructions must include directions on the proper use of the ASD, and, where applicable the time within which the device must be read, and the manner in which the reading is made.

(c) As the user of the ADS (*e.g.*, employer, STT), you must follow the QAP instructions.

(d) You are not permitted to use an ASD that does not pass the specified quality control checks or that has passed its expiration date.

(e) As an employer, with respect to breath ASDs, you must also follow the device use and care requirements of § 40.233 .

Subpart L—Alcohol Screening Tests

§ 40.241 What are the first steps in any alcohol screening test?

As the BAT or STT you will take the following steps to begin all alcohol screening tests, regardless of the type of testing device you are using:

(a) When a specific time for an employee's test has been scheduled, or the collection site is at the employee's worksite, and the employee does not appear at the collection site at the scheduled time, contact the DER to determine the appropriate interval within which the DER has determined the employee is authorized to arrive. If the employee's arrival is delayed beyond that time, you must notify the DER that the employee has not reported for testing. In a situation where a C/TPA has notified an owner/operator or other individual employee to report for testing and the employee does not appear, the C/TPA must notify the employee that he or she has refused to test.

(b) Ensure that, when the employee enters the alcohol testing site, you begin the alcohol testing process without undue delay. For example, you must not wait because the employee says he or she is not ready or because an authorized employer or employee representative is delayed in arriving.

(1) If the employee is also going to take a DOT drug test, you must, to the greatest extent practicable, ensure that the alcohol test is completed before the urine collection process begins.

(2) If the employee needs medical attention (*e.g.*, an injured employee in an emergency medical facility who is required to have a post-accident test), do not delay this treatment to conduct a test.

(c) Require the employee to provide positive identification. You must see a photo ID issued by the employer (other than in the case of an owner-operator or other self-employer individual) or a Federal, state, or local government (*e.g.*, a driver's license). You may not accept faxes or photocopies of identification. Positive identification by an employer representative (not a coworker or another employee being tested) is also acceptable. If the employee

cannot produce positive identification, you must contact a DER to verify the identity of the employee.

(d) If the employee asks, provide your identification to the employee. Your identification must include your name and your employer's name but is not required to include your picture, address, or telephone number.

(e) Explain the testing procedure to the employee, including showing the employee the instructions on the back of the ATF.

(f) Complete Step 1 of the ATF.

(g) Direct the employee to complete Step 2 on the ATF and sign the certification. If the employee refuses to sign this certification, you must document this refusal on the ''Remarks'' line of the ATF and immediately notify the DER. This is a refusal to test.

§ 40.243 What is the procedure for an alcohol screening test using an EBT or non-evidential breath ASD?

As the BAT or STT, you must take the following steps:

(a) Select, or allow the employee to select, an individually wrapped or sealed mouthpiece from the testing materials.

(b) Open the individually wrapped or sealed mouthpiece in view of the employee and insert it into the device in accordance with the manufacturer's instructions.

(c) Instruct the employee to blow steadily and forcefully into the mouthpiece for at least six seconds or until the device indicates that an adequate amount of breath has been obtained.

(d) Show the employee the displayed test result.

(e) If the device is one that prints the test number, testing device name and serial number, time, and result directly onto the ATF, you must check to ensure that the information has been printed correctly onto the ATF.

(f) If the device is one that prints the test number, testing device name and serial number, time and result, but on a separate printout rather than directly onto the ATF, you must affix the printout of the information to the designated space on the ATF with tamper-evident tape or use a self-adhesive label that is tamper-evident.

(g) If the device is one that does not print the test number, testing device name and serial number, time, and result, or it is a device not being used with a printer, you must record this information in Step 3 of the ATF.

§ 40.245 What is the procedure for an alcohol screening test using a saliva ASD or a breath tube ASD?

(a) As the STT or BAT, you must take the following steps when using the saliva ASD:

(1) Check the expiration date on the device or on the package containing the device and show it to the employee. You may not use the device after its expiration date.

(2) Open an individually wrapped or sealed package containing the device in the presence of the employee.

(3) Offer the employee the opportunity to use the device. If the employee uses it, you must instruct the employee to insert it into his or her mouth and use it in a manner described by the device's manufacturer.

(4) If the employee chooses not to use the device, or in all cases in which a new test is necessary because the device did not activate (see paragraph (a)(7) of this section), you must insert the device into the employee's mouth and gather saliva in the manner described by the device's manufacturer. You must wear single-use examination or similar gloves while doing so and change them following each test.

(5) When the device is removed from the employee's mouth, you must follow the manufacturer's instructions regarding necessary next steps in ensuring that the device has activated.

(6)(i) If you were unable to successfully follow the procedures of paragraphs (a)(3) through (a)(5) of this section (*e.g.*, the device breaks, you drop the device on the floor), you must discard the device and conduct a new test using a new device.

(ii) The new device you use must be one that has been under your control or that of the employee before the test.

(iii) You must note on the ''Remarks'' line of the ATF the reason for the new test. (Note: You may continue using the same ATF with which you began the test.)

(iv) You must offer the employee the choice of using the device or having you use it unless the employee, in the opinion of the STT or BAT, was responsible (*e.g.*, the employee dropped the device) for the new test needing to be conducted.

(v) If you are unable to successfully follow the procedures of paragraphs (a)(3) through (a)(5) of this section on the new test, you must end the collection and put an explanation on the ''Remarks'' line of the ATF.

(vi) You must then direct the employee to take a new test immediately, using an EBT for the screening test.

(7) If you are able to successfully follow the procedures of paragraphs (a)(3)—(a)(5) of this section, but the device does not activate, you must discard the device and conduct a new test, in the same manner as provided in paragraph (a)(6) of this section. In this case, you must place the device into the employee's mouth to collect saliva for the new test.

(8) You must read the result displayed on the device no sooner than the device's manufacturer instructs. In all cases the result displayed must be read within 15 minutes of the test. You must then show the device and it's reading to the employee and enter the result on the ATF.

(9) You must never re-use devices, swabs, gloves or other materials used in saliva testing.

(10) You must note the fact that you used a saliva ASD in Step 3 of the ATF.

(b) As the STT or BAT, you must take the following steps when using the breath tube ASD:

(1) Check the expiration date on the detector device and the electronic analyzer or on the package containing the device and the analyzer and show it to the employee. You must not use the device or the analyzer after their expiration date. You must not use an analyzer which is not specifically pre-calibrated for the device being used in the collection.

(2) Remove the device from the package and secure an inflation bag onto the appropriate end of the device, as directed by the manufacturer on the device's instructions.

(3) Break the tube's ampoule in the presence of the employee.

(4) Offer the employee the opportunity to use the device. If the employee chooses to use (*e.g.* hold) the device, instruct the employee to blow forcefully and steadily into the blowing end of device until the inflation bag fills with air (approximately 12 seconds).

(5) If the employee chooses not to hold the device, you must hold it and provide the use instructions in paragraph (b)(4) of this section.

(6) When the employee completes the breath process, take the device from the employee (or if you were holding it, remove it from the employee's mouth), remove the inflation bag, and prepare the device to be read by the analyzer in accordance with the manufacturer's directions.

(7)(i) If you were unable to successfully follow the procedures of paragraphs (b)(4) through (b)(6) of this section (*e.g.*, the device breaks apart, the employee did not fill the inflation bag), you must discard the device and conduct a new test using a new one.

(ii) The new device you use must be one that has been under your control or that of the employer before the test.

(iii) You must note on the ''Remarks'' line of the ATF the reason for the new test. (Note: You may continue using the same ATF with which you began the test.)

(iv) You must offer the employee the choice of holding the device or having you hold it unless the employee, in the your opinion, was responsible (*e.g.*, the employee failed to fill the inflation bag) for the new test needing to be conducted.

(v) If you are unable to successfully follow the procedures of paragraphs (b)(4) through (b)(6) of this section on the new test, you must end the collection and put an explanation on the ''Remarks'' line of the ATF.

(vi) You must then direct the employee to take a new test immediately, using another type of ASD (*e.g.*, saliva device) or an EBT.

(8) If you were able to successfully follow the procedures of paragraphs (b)(4) through (b)(6) of this section and after having waited the required amount of time directed by the manufacturer for the detector device to incubate, you must place the device in

the analyzer in accordance with the manufacturer's directions. The result must be read from the analyzer no earlier then the required incubation time of the device. In all cases, the result must be read within 15 minutes of the test.

(9) You must follow the manufacturer's instructions for determining the result of the test. You must show the analyzer result to the employee and record the result on Step 3 of the ATF.

(10) You must never re-use detector devices or any gloves used in breath tube testing. The inflation bag must be voided of air following removal from a device. Inflation bags and electronic analyzers may be re-used but only in accordance with the manufacturer's directions.

(11) You must note the fact that you used a breath tube device in Step 3 of the ATF.

[67 FR 61522, Oct. 1, 2002, as amended at 72 FR 1299, Jan. 11, 2007]

§ 40.247 What procedures does the BAT or STT follow after a screening test result?

(a) If the test result is an alcohol concentration of less than 0.02, as the BAT or STT, you must do the following:

(1) Sign and date Step 3 of the ATF; and

(2) Transmit the result to the DER in a confidential manner, as provided in § 40.255 .

(b) If the test result is an alcohol concentration of 0.02 or higher, as the BAT or STT, you must direct the employee to take a confirmation test.

(1) If you are the BAT who will conduct the confirmation test, you must then conduct the test using the procedures beginning at § 40.251 .

(2) If you are not the BAT who will conduct the confirmation test, direct the employee to take a confirmation test, sign and date Step 3 of the ATF, and give the employee Copy 2 of the ATF.

(3) If the confirmation test will be performed at a different site from the screening test, you must take the following additional steps:

(i) Advise the employee not to eat, drink, put anything (*e.g.*, cigarette, chewing gum) into his or her mouth, or belch;

(ii) Tell the employee the reason for the waiting period required by § 40.251(a) (*i.e.*, to prevent an accumulation of mouth alcohol from leading to an artificially high reading);

(iii) Explain that following your instructions concerning the waiting period is to the employee's benefit;

(iv) Explain that the confirmation test will be conducted at the end of the waiting period, even if the instructions have not been followed;

(v) Note on the ''Remarks'' line of the ATF that the waiting period instructions were provided;

(vi) Instruct the person accompanying the employee to carry a copy of the ATF to the BAT who will perform the confirmation test; and

(vii) Ensure that you or another BAT, STT, or employer representative observe the employee as he or she is transported to the confirmation testing site. You must direct the employee not to attempt to drive a motor vehicle to the confirmation testing site.

(c) If the screening test is invalid, you must, as the BAT or STT, tell the employee the test is cancelled and note the problem on the ''Remarks'' line of the ATF. If practicable, repeat the testing process (see § 40. 271).

Subpart M—Alcohol Confirmation Tests

§ 40.251 What are the first steps in an alcohol confirmation test?

As the BAT for an alcohol confirmation test, you must follow these steps to begin the confirmation test process:

(a) You must carry out a requirement for a waiting period before the confirmation test, by taking the following steps:

(1) You must ensure that the waiting period lasts at least 15 minutes, starting with the completion of the screening test. After the waiting period has elapsed, you should begin the confirmation test as soon as possible, but not more than 30 minutes after the completion of the screening test.

(i) If the confirmation test is taking place at a different location from the screening test (see § 40.247(b)(3)) the

time of transit between sites counts toward the waiting period if the STT or BAT who conducted the screening test provided the waiting period instructions.

(ii) If you cannot verify, through review of the ATF, that waiting period instructions were provided, then you must carry out the waiting period requirement.

(iii) You or another BAT or STT, or an employer representative, must observe the employee during the waiting period.

(2) Concerning the waiting period, you must tell the employee:

(i) Not to eat, drink, put anything (*e.g.*, cigarette, chewing gum) into his or her mouth, or belch;

(ii) The reason for the waiting period (*i.e.*, to prevent an accumulation of mouth alcohol from leading to an artificially high reading);

(iii) That following your instructions concerning the waiting period is to the employee's benefit; and

(iv) That the confirmation test will be conducted at the end of the waiting period, even if the instructions have not been followed.

(3) If you become aware that the employee has not followed the instructions, you must note this on the ''Remarks'' line of the ATF.

(b) If you did not conduct the screening test for the employee, you must require positive identification of the employee, explain the confirmation procedures, and use a new ATF. You must note on the ''Remarks'' line of the ATF that a different BAT or STT conducted the screening test.

(c) Complete Step 1 of the ATF.

(d) Direct the employee to complete Step 2 on the ATF and sign the certification. If the employee refuses to sign this certification, you must document this refusal on the ''Remarks'' line of the ATF and immediately notify the DER. This is a refusal to test.

(e) Even if more than 30 minutes have passed since the screening test result was obtained, you must begin the confirmation test procedures in §40.253, not another screening test.

(f) You must note on the ''Remarks'' line of the ATF the time that elapsed between the two events, and if the confirmation test could not begin within 30 minutes of the screening test, the reason why.

(g) Beginning the confirmation test procedures after the 30 minutes have elapsed does not invalidate the screening or confirmation tests, but it may constitute a regulatory violation subject to DOT agency sanction.

§ 40.253 What are the procedures for conducting an alcohol confirmation test?

As the BAT conducting an alcohol confirmation test, you must follow these steps in order to complete the confirmation test process:

(a) In the presence of the employee, you must conduct an air blank on the EBT you are using before beginning the confirmation test and show the reading to the employee.

(1) If the reading is 0.00, the test may proceed. If the reading is greater than 0.00, you must conduct another air blank.

(2) If the reading on the second air blank is 0.00, the test may proceed. If the reading is greater than 0.00, you must take the EBT out of service.

(3) If you take an EBT out of service for this reason, no one may use it for testing until the EBT is found to be within tolerance limits on an external check of calibration.

(4) You must proceed with the test of the employee using another EBT, if one is available.

(b) You must open a new individually wrapped or sealed mouthpiece in view of the employee and insert it into the device in accordance with the manufacturer's instructions.

(c) You must ensure that you and the employee read the unique test number displayed on the EBT.

(d) You must instruct the employee to blow steadily and forcefully into the mouthpiece for at least six seconds or until the device indicates that an adequate amount of breath has been obtained.

(e) You must show the employee the result displayed on the EBT.

(f) You must show the employee the result and unique test number that the EBT prints out either directly onto the ATF or onto a separate printout.

(g) If the EBT provides a separate printout of the result, you must attach

the printout to the designated space on the ATF with tamper-evident tape, or use a self-adhesive label that is tamper-evident.

[65 FR 79526, Dec. 19, 2000, as amended at 66 FR 41954, Aug. 9, 2001]

§ 40.255 What happens next after the alcohol confirmation test result?

(a) After the EBT has printed the result of an alcohol confirmation test, you must, as the BAT, take the following additional steps:

(1) Sign and date Step 3 of the ATF.

(2) If the alcohol confirmation test result is lower than 0.02, nothing further is required of the employee. As the BAT, you must sign and date Step 3 of the ATF.

(3) If the alcohol confirmation test result is 0.02 or higher, direct the employee to sign and date Step 4 of the ATF. If the employee does not do so, you must note this on the ''Remarks'' line of the ATF. However, this is not considered a refusal to test.

(4) If the test is invalid, tell the employee the test is cancelled and note the problem on the ''Remarks'' line of the ATF. If practicable, conduct a retest. (see § 40.271).

(5) Immediately transmit the result directly to the DER in a confidential manner.

(i) You may transmit the results using Copy 1 of the ATF, in person, by telephone, or by electronic means. In any case, you must immediately notify the DER of any result of 0.02 or greater by any means (*e.g.*, telephone or secure fax machine) that ensures the result is immediately received by the DER. You must not transmit these results through C/TPAs or other service agents.

(ii) If you do not make the initial transmission in writing, you must follow up the initial transmission with Copy 1 of the ATF.

(b) As an employer, you must take the following steps with respect to the receipt and storage of alcohol test result information:

(1) If you receive any test results that are not in writing (*e.g.*, by telephone or electronic means), you must establish a mechanism to establish the identity of the BAT sending you the results.

(2) You must store all test result information in a way that protects confidentiality.

Subpart N—Problems in Alcohol Testing

§ 40.261 What is a refusal to take an alcohol test, and what are the consequences?

(a) As an employee, you are considered to have refused to take an alcohol test if you:

(1) Fail to appear for any test (except a pre-employment test) within a reasonable time, as determined by the employer, consistent with applicable DOT agency regulations, after being directed to do so by the employer. This includes the failure of an employee (including an owner-operator) to appear for a test when called by a C/TPA (see § 40.241(a));

(2) Fail to remain at the testing site until the testing process is complete; *Provided,* That an employee who leaves the testing site before the testing process commences (see § 40.243(a)) for a pre-employment test is not deemed to have refused to test;

(3) Fail to provide an adequate amount of saliva or breath for any alcohol test required by this part or DOT agency regulations; *Provided,* That an employee who does not provide an adequate amount of breath or saliva because he or she has left the testing site before the testing process commences (see § 40.243(a)) for a pre-employment test is not deemed to have refused to test;

(4) Fail to provide a sufficient breath specimen, and the physician has determined, through a required medical evaluation, that there was no adequate medical explanation for the failure (see § 40.265(c));

(5) Fail to undergo a medical examination or evaluation, as directed by the employer as part of the insufficient breath procedures outlined at § 40.265(c);

(6) Fail to sign the certification at Step 2 of the ATF (see §§ 40.241(g) and 40.251(d)); or

(7) Fail to cooperate with any part of the testing process.

(b) As an employee, if you refuse to take an alcohol test, you incur the

same consequences specified under DOT agency regulations for a violation of those DOT agency regulations.

(c) As a BAT or an STT, or as the physician evaluating a ''shy lung'' situation, when an employee refuses to test as provided in paragraph (a) of this section, you must terminate the portion of the testing process in which you are involved, document the refusal on the ATF (or in a separate document which you cause to be attached to the form), immediately notify the DER by any means (*e.g.*, telephone or secure fax machine) that ensures the refusal notification is immediately received. You must make this notification directly to the DER (not using a C/TPA as an intermediary).

(d) As an employee, when you refuse to take a non-DOT test or to sign a non-DOT form, you have not refused to take a DOT test. There are no consequences under DOT agency regulations for such a refusal.

[65 FR 79526, Dec. 19, 2000, as amended at 66 FR 41954, Aug. 9, 2001]

§ 40.263 What happens when an employee is unable to provide a sufficient amount of saliva for an alcohol screening test?

(a) As the STT, you must take the following steps if an employee is unable to provide sufficient saliva to complete a test on a saliva screening device (*e.g.*, the employee does not provide sufficient saliva to activate the device).

(1) You must conduct a new screening test using a new screening device.

(2) If the employee refuses to make the attempt to complete the new test, you must discontinue testing, note the fact on the ''Remarks'' line of the ATF, and immediately notify the DER. This is a refusal to test.

(3) If the employee has not provided a sufficient amount of saliva to complete the new test, you must note the fact on the ''Remarks'' line of the ATF and immediately notify the DER.

(b) As the DER, when the STT informs you that the employee has not provided a sufficient amount of saliva (see paragraph (a)(3) of this section), you must immediately arrange to administer an alcohol test to the employee using an EBT or other breath testing device.

§ 40.265 What happens when an employee is unable to provide a sufficient amount of breath for an alcohol test?

(a) If an employee does not provide a sufficient amount of breath to permit a valid breath test, you must take the steps listed in this section.

(b) As the BAT or STT, you must instruct the employee to attempt again to provide a sufficient amount of breath and about the proper way to do so.

(1) If the employee refuses to make the attempt, you must discontinue the test, note the fact on the ''Remarks'' line of the ATF, and immediately notify the DER. This is a refusal to test.

(2) If the employee again attempts and fails to provide a sufficient amount of breath, you may provide another opportunity to the employee to do so if you believe that there is a strong likelihood that it could result in providing a sufficient amount of breath.

(3) When the employee's attempts under paragraph (b)(2) of this section have failed to produce a sufficient amount of breath, you must note the fact on the ''Remarks'' line of the ATF and immediately notify the DER.

(4) If you are using an EBT that has the capability of operating manually, you may attempt to conduct the test in manual mode.

(5) If you are qualified to use a saliva ASD and you are in the screening test stage, you may change to a saliva ASD only to complete the screening test.

(c) As the employer, when the BAT or STT informs you that the employee has not provided a sufficient amount of breath, you must direct the employee to obtain, within five days, an evaluation from a licensed physician who is acceptable to you and who has expertise in the medical issues raised by the employee's failure to provide a sufficient specimen.

(1) You are required to provide the physician who will conduct the evaluation with the following information and instructions:

(i) That the employee was required to take a DOT breath alcohol test, but

was unable to provide a sufficient amount of breath to complete the test;

(ii) The consequences of the appropriate DOT agency regulation for refusing to take the required alcohol test;

(iii) That the physician must provide you with a signed statement of his or her conclusions; and

(iv) That the physician, in his or her reasonable medical judgment, must base those conclusions on one of the following determinations:

(A) A medical condition has, or with a high degree of probability could have, precluded the employee from providing a sufficient amount of breath. The physician must not include in the signed statement detailed information on the employee's medical condition. In this case, the test is cancelled.

(B) There is not an adequate basis for determining that a medical condition has, or with a high degree of probability could have, precluded the employee from providing a sufficient amount of breath. This constitutes a refusal to test.

(C) For purposes of paragraphs (c)(1)(iv)(A) and (B) of this section, a medical condition includes an ascertainable physiological condition (*e.g.*, a respiratory system dysfunction) or a medically documented pre-existing psychological disorder, but does not include unsupported assertions of ''situational anxiety'' or hyperventilation.

(2) As the physician making the evaluation, after making your determination, you must provide a written statement of your conclusions and the basis for them to the DER directly (and not through a C/TPA acting as an itermediary). You must not include in this statement detailed information on the employee's medical condition beyond what is necessary to explain your conclusion.

(3) Upon receipt of the report from the examining physician, as the DER you must immediately inform the employee and take appropriate action based upon your DOT agency regulations.

§ 40.267 What problems always cause an alcohol test to be cancelled?

As an employer, a BAT, or an STT, you must cancel an alcohol test if any of the following problems occur. These are ''fatal flaws.'' You must inform the DER that the test was cancelled and must be treated as if the test never occurred. These problems are:

(a) In the case of a screening test conducted on a saliva ASD or a breath tube ASD:

(1) The STT or BAT reads the result either sooner than or later than the time allotted by the manufacturer and this Part (see § 40.245(a)(8) for the saliva ASD and § 40.245(b)(8) for the breath tube ASD).

(2) The saliva ASD does not activate (*see* § 40.245(a)(7); or

(3) The device is used for a test after the expiration date printed on the device or on its package (see § 40.245(a)(1) for the saliva ASD and § 40.245(b)(1) for the breath tube ASD).

(4) The breath tube ASD is tested with an analyzer which has not been pre-calibrated for that device's specific lot (see § 40.245(b)(1)).

(b) In the case of a screening or confirmation test conducted on an EBT, the sequential test number or alcohol concentration displayed on the EBT is not the same as the sequential test number or alcohol concentration on the printed result (see § 40.253(c), (e) and (f)).

(c) In the case of a confirmation test:

(1) The BAT conducts the confirmation test before the end of the minimum 15-minute waiting period (see § 40.251(a)(1));

(2) The BAT does not conduct an air blank before the confirmation test (see § 40.253(a));

(3) There is not a 0.00 result on the air blank conducted before the confirmation test (see § 40.253(a)(1) and (2));

(4) The EBT does not print the result (see § 40.253(f)); or

(5) The next external calibration check of the EBT produces a result that differs by more than the tolerance stated in the QAP from the known value of the test standard. In this case, every result of 0.02 or above obtained on the EBT since the last valid external calibration check is cancelled (see § 40.233(a)(1) and (c)(3)).

[65 FR 79526, Dec. 19, 2000, as amended at 67 FR 61522, Oct. 1, 2002; 71 FR 49384, Aug. 23, 2006; 72 FR 1299, Jan. 11, 2007]

§ 40.269 What problems cause an alcohol test to be cancelled unless they are corrected?

As a BAT or STT, or employer, you must cancel an alcohol test if any of the following problems occur, unless they are corrected. These are ''correctable flaws.'' These problems are:

(a) The BAT or STT does not sign the ATF (see §§ 40.247(a)(1) and 40.255(a)(1)).

(b) The BAT or STT fails to note on the ''Remarks'' line of the ATF that the employee has not signed the ATF after the result is obtained (see § 40.255(a)(3)).

(c) The BAT or STT uses a non-DOT form for the test (see § 40.225(a)).

[65 FR 79526, Dec. 19, 2000, as amended at 71 FR 49384, Aug. 23, 2006]

§ 40.271 How are alcohol testing problems corrected?

(a) As a BAT or STT, you have the responsibility of trying to complete successfully an alcohol test for each employee.

(1) If, during or shortly after the testing process, you become aware of any event that will cause the test to be cancelled (see § 40.267), you must try to correct the problem promptly, if practicable. You may repeat the testing process as part of this effort.

(2) If repeating the testing process is necessary, you must begin a new test as soon as possible. You must use a new ATF, a new sequential test number, and, if needed, a new ASD and/or a new EBT. It is permissible to use additional technical capabilities of the EBT (*e.g.*, manual operation) if you have been trained to do so in accordance with § 40.213(c) .

(3) If repeating the testing process is necessary, you are not limited in the number of attempts to complete the test, provided that the employee is making a good faith effort to comply with the testing process.

(4) If another testing device is not available for the new test at the testing site, you must immediately notify the DER and advise the DER that the test could not be completed. As the DER who receives this information, you must make all reasonable efforts to ensure that the test is conducted at another testing site as soon as possible.

(b) If, as an STT, BAT, employer or other service agent administering the testing process, you become aware of a ''correctable flaw'' (see § 40.269) that has not already been corrected, you must take all practicable action to correct the problem so that the test is not cancelled.

(1) If the problem resulted from the omission of required information, you must, as the person responsible for providing that information, supply in writing the missing information and a signed statement that it is true and accurate. For example, suppose you are a BAT and you forgot to make a notation on the ''Remarks'' line of the ATF that the employee did not sign the certification. You would, when the problem is called to your attention, supply a signed statement that the employee failed or refused to sign the certification after the result was obtained, and that your signed statement is true and accurate.

(2) If the problem is the use of a non-DOT form, you must, as the person responsible for the use of the incorrect form, certify in writing that the incorrect form contains all the information needed for a valid DOT alcohol test. You must also provide a signed statement that the incorrect form was used inadvertently or as the only means of conducting a test, in circumstances beyond your control, and the steps you have taken to prevent future use of non-DOT forms for DOT tests. You must supply this information on the same business day on which you are notified of the problem, transmitting it by fax or courier.

(c) If you cannot correct the problem, you must cancel the test.

§ 40.273 What is the effect of a cancelled alcohol test?

(a) A cancelled alcohol test is neither positive nor negative.

(1) As an employer, you must not attach to a cancelled test the consequences of a test result that is 0.02 or greater (*e.g.*, removal from a safety-sensitive position).

(2) As an employer, you must not use a cancelled test in a situation where an employee needs a test result that is below 0.02 (*e.g.*, in the case of a return-to-duty or follow-up test to authorize

the employee to perform safety-sensitive functions).

(3) As an employer, you must not direct a recollection for an employee because a test has been cancelled, except in the situations cited in paragraph (a)(2) of this section or other provisions of this part.

(b) A cancelled test does not count toward compliance with DOT requirements, such as a minimum random testing rate.

(c) When a test must be cancelled, if you are the BAT, STT, or other person who determines that the cancellation is necessary, you must inform the affected DER within 48 hours of the cancellation.

(d) A cancelled DOT test does not provide a valid basis for an employer to conduct a non-DOT test (*i.e.,* a test under company authority).

§ 40.275 What is the effect of procedural problems that are not sufficient to cancel an alcohol test?

(a) As an STT, BAT, employer, or a service agent administering the testing process, you must document any errors in the testing process of which you become aware, even if they are not ''fatal flaws'' or ''correctable flaws'' listed in this subpart. Decisions about the ultimate impact of these errors will be determined by administrative or legal proceedings, subject to the limitation of paragraph (b) of this section.

(b) No person concerned with the testing process may declare a test cancelled based on a mistake in the process that does not have a significant adverse effect on the right of the employee to a fair and accurate test. For example, it is inconsistent with this part to cancel a test based on a minor administrative mistake (*e.g.,* the omission of the employee's middle initial) or an error that does not affect employee protections under this part. Nor does the failure of an employee to sign in Step 4 of the ATF result in the cancellation of the test. Nor is a test to be cancelled on the basis of a claim by an employee that he or she was improperly selected for testing.

(c) As an employer, these errors, even though not sufficient to cancel an alcohol test result, may subject you to enforcement action under DOT agency regulations.

§ 40.277 Are alcohol tests other than saliva or breath permitted under these regulations?

No, other types of alcohol tests (*e,g.,* blood and urine) are not authorized for testing done under this part. Only saliva or breath for screening tests and breath for confirmation tests using approved devices are permitted.

Subpart O—Substance Abuse Professionals and the Return-to-Duty Process

§ 40.281 Who is qualified to act as a SAP?

To be permitted to act as a SAP in the DOT drug and alcohol testing program, you must meet each of the requirements of this section:

(a) *Credentials.* You must have one of the following credentials:

(1) You are a licensed physician (Doctor of Medicine or Osteopathy);

(2) You are a licensed or certified social worker;

(3) You are a licensed or certified psychologist;

(4) You are a licensed or certified employee assistance professional;

(5) You are a state-licensed or certified marriage and family therapist; or

(6) You are a drug and alcohol counselor certified by the National Association of Alcoholism and Drug Abuse Counselors Certification Commission (NAADAC); or by the International Certification Reciprocity Consortium/Alcohol and Other Drug Abuse (ICRC); or by the National Board for Certified Counselors, Inc. and Affiliates/Master Addictions Counselor (NBCC).

(b) *Basic knowledge.* You must be knowledgeable in the following areas:

(1) You must be knowledgeable about and have clinical experience in the diagnosis and treatment of alcohol and controlled substances-related disorders.

(2) You must be knowledgeable about the SAP function as it relates to employer interests in safety-sensitive duties.

(3) You must be knowledgeable about this part, the DOT agency regulations

applicable to the employers for whom you evaluate employees, and the DOT SAP Guidelines, and you keep current on any changes to these materials. These documents are available from ODAPC (Department of Transportation, 1200 New Jersey Avenue, SE., Washington DC, 20590 (202–366–3784), or on the ODAPC web site (*http://www.dot.gov/ost/dapc*).

(c) *Qualification training.* You must receive qualification training meeting the requirements of this paragraph (c).

(1) Qualification training must provide instruction on the following subjects:

(i) Background, rationale, and coverage of the Department's drug and alcohol testing program;

(ii) 49 CFR Part 40 and DOT agency drug and alcohol testing rules;

(iii) Key DOT drug testing requirements, including collections, laboratory testing, MRO review, and problems in drug testing;

(iv) Key DOT alcohol testing requirements, including the testing process, the role of BATs and STTs, and problems in alcohol tests;

(v) SAP qualifications and prohibitions;

(vi) The role of the SAP in the return-to-duty process, including the initial employee evaluation, referrals for education and/or treatment, the follow-up evaluation, continuing treatment recommendations, and the follow-up testing plan;

(vii) SAP consultation and communication with employers, MROs, and treatment providers;

(viii) Reporting and recordkeeping requirements;

(ix) Issues that SAPs confront in carrying out their duties under the program.

(2) Following your completion of qualification training under paragraph (c)(1) of this section, you must satisfactorily complete an examination administered by a nationally-recognized professional or training organization. The examination must comprehensively cover all the elements of qualification training listed in paragraph (c)(1) of this section.

(3) The following is the schedule for qualification training you must meet:

(i) If you became a SAP before August 1, 2001, you must meet the qualification training requirement no later than December 31, 2003.

(ii) If you become a SAP between August 1, 2001, and December 31, 2003, you must meet the qualification training requirement no later than December 31, 2003.

(iii) If you become a SAP on or after January 1, 2004, you must meet the qualification training requirement before you begin to perform SAP functions.

(d) *Continuing education.* During each three-year period from the date on which you satisfactorily complete the examination under paragraph (c)(2) of this section, you must complete continuing education consisting of at least 12 professional development hours (*e.g.*, CEUs) relevant to performing SAP functions.

(1) This continuing education must include material concerning new technologies, interpretations, recent guidance, rule changes, and other information about developments in SAP practice, pertaining to the DOT program, since the time you met the qualification training requirements of this section.

(2) Your continuing education activities must include documentable assessment tools to assist you in determining whether you have adequately learned the material.

(e) *Documentation.* You must maintain documentation showing that you currently meet all requirements of this section. You must provide this documentation on request to DOT agency representatives and to employers and C/TPAs who are using or contemplating using your services.

[65 FR 79526, Dec. 19, 2000, as amended at 69 FR 3022, Jan. 22, 2004; 71 FR 49384; Aug. 23, 2006; 71 FR 55347, Sept. 22, 2006]

§ 40.283 How does a certification organization obtain recognition for its members as SAPs?

(a) If you represent a certification organization that wants DOT to authorize its certified drug and alcohol counselors to be added to § 40.281(a)(6), you may submit a written petition to DOT requesting a review of your petition for inclusion.

(b) You must obtain the National Commission for Certifying Agencies (NCCA) accreditation before DOT will act on your petition.

(c) You must also meet the minimum requirements of Appendix E to this part before DOT will act on your petition.

[65 FR 79526, Dec. 19, 2000, as amended at 71 FR 49384, Aug. 23, 2006]

§ 40.285 When is a SAP evaluation required?

(a) As an employee, when you have violated DOT drug and alcohol regulations, you cannot again perform any DOT safety-sensitive duties for any employer until and unless you complete the SAP evaluation, referral, and education/treatment process set forth in this subpart and in applicable DOT agency regulations. The first step in this process is a SAP evaluation.

(b) For purposes of this subpart, a verified positive DOT drug test result, a DOT alcohol test with a result indicating an alcohol concentration of 0.04 or greater, a refusal to test (including by adulterating or substituting a urine specimen) or any other violation of the prohibition on the use of alcohol or drugs under a DOT agency regulation constitutes a DOT drug and alcohol regulation violation.

§ 40.287 What information is an employer required to provide concerning SAP services to an employee who has a DOT drug and alcohol regulation violation?

As an employer, you must provide to each employee (including an applicant or new employee) who violates a DOT drug and alcohol regulation a listing of SAPs readily available to the employee and acceptable to you, with names, addresses, and telephone numbers. You cannot charge the employee any fee for compiling or providing this list. You may provide this list yourself or through a C/TPA or other service agent.

§ 40.289 Are employers required to provide SAP and treatment services to employees?

(a) As an employer, you are not required to provide a SAP evaluation or any subsequent recommended education or treatment for an employee who has violated a DOT drug and alcohol regulation.

(b) However, if you offer that employee an opportunity to return to a DOT safety-sensitive duty following a violation, you must, before the employee again performs that duty, ensure that the employee receives an evaluation by a SAP meeting the requirements of § 40.281 and that the employee successfully complies with the SAP's evaluation recommendations.

(c) Payment for SAP evaluations and services is left for employers and employees to decide and may be governed by existing management-labor agreements and health care benefits.

§ 40.291 What is the role of the SAP in the evaluation, referral, and treatment process of an employee who has violated DOT agency drug and alcohol testing regulations?

(a) As a SAP, you are charged with:

(1) Making a face-to-face clinical assessment and evaluation to determine what assistance is needed by the employee to resolve problems associated with alcohol and/or drug use;

(2) Referring the employee to an appropriate education and/or treatment program;

(3) Conducting a face-to-face follow-up evaluation to determine if the employee has actively participated in the education and/or treatment program and has demonstrated successful compliance with the initial assessment and evaluation recommendations;

(4) Providing the DER with a follow-up drug and/or alcohol testing plan for the employee; and

(5) Providing the employee and employer with recommendations for continuing education and/or treatment.

(b) As a SAP, you are not an advocate for the employer or employee. Your function is to protect the public interest in safety by professionally evaluating the employee and recommending appropriate education/treatment, follow-up tests, and aftercare.

§ 40.293 What is the SAP's function in conducting the initial evaluation of an employee?

As a SAP, for every employee who comes to you following a DOT drug and

alcohol regulation violation, you must accomplish the following:

(a) Provide a comprehensive face-to-face assessment and clinical evaluation.

(b) Recommend a course of education and/or treatment with which the employee must demonstrate successful compliance prior to returning to DOT safety-sensitive duty.

(1) You must make such a recommendation for every individual who has violated a DOT drug and alcohol regulation.

(2) You must make a recommendation for education and/or treatment that will, to the greatest extent possible, protect public safety in the event that the employee returns to the performance of safety-sensitive functions.

(c) Appropriate education may include, but is not limited to, self-help groups (*e.g.*, Alcoholics Anonymous) and community lectures, where attendance can be independently verified, and bona fide drug and alcohol education courses.

(d) Appropriate treatment may include, but is not limited to, in-patient hospitalization, partial in-patient treatment, out-patient counseling programs, and aftercare.

(e) You must provide a written report directly to the DER highlighting your specific recommendations for assistance (see § 40.311(c)).

(f) For purposes of your role in the evaluation process, you must assume that a verified positive test result has conclusively established that the employee committed a DOT drug and alcohol regulation violation. You must not take into consideration in any way, as a factor in determining what your recommendation will be, any of the following:

(1) A claim by the employee that the test was unjustified or inaccurate;

(2) Statements by the employee that attempt to mitigate the seriousness of a violation of a DOT drug or alcohol regulation (*e.g.*, related to assertions of use of hemp oil, ''medical marijuana'' use, ''contact positives,'' poppy seed ingestion, job stress); or

(3) Personal opinions you may have about the justification or rationale for drug and alcohol testing.

(g) In the course of gathering information for purposes of your evaluation in the case of a drug-related violation, you may consult with the MRO. As the MRO, you are required to cooperate with the SAP and provide available information the SAP requests. It is not necessary to obtain the consent of the employee to provide this information.

§ 40.295 May employees or employers seek a second SAP evaluation if they disagree with the first SAP's recommendations?

(a) As an employee with a DOT drug and alcohol regulation violation, when you have been evaluated by a SAP, you must not seek a second SAP's evaluation in order to obtain another recommendation.

(b) As an employer, you must not seek a second SAP's evaluation if the employee has already been evaluated by a qualified SAP. If the employee, contrary to paragraph (a) of this section, has obtained a second SAP evaluation, as an employer you may not rely on it for any purpose under this part.

§ 40.297 Does anyone have the authority to change a SAP's initial evaluation?

(a) Except as provided in paragraph (b) of this section, no one (*e.g.*, an employer, employee, a managed-care provider, any service agent) may change in any way the SAP's evaluation or recommendations for assistance. For example, a third party is not permitted to make more or less stringent a SAP's recommendation by changing the SAP's evaluation or seeking another SAP's evaluation.

(b) The SAP who made the initial evaluation may modify his or her initial evaluation and recommendations based on new or additional information (*e.g.*, from an education or treatment program).

§ 40.299 What is the SAP's role and what are the limits on a SAP's discretion in referring employees for education and treatment?

(a) As a SAP, upon your determination of the best recommendation for assistance, you will serve as a referral source to assist the employee's entry

into an education and/or treatment program.

(b) To prevent the appearance of a conflict of interest, you must not refer an employee requiring assistance to your private practice or to a person or organization from which you receive payment or to a person or organization in which you have a financial interest. You are precluded from making referrals to entities with which you are financially associated.

(c) There are four exceptions to the prohibitions contained in paragraph (b) of this section. You may refer an employee to any of the following providers of assistance, regardless of your relationship with them:

(1) A public agency (*e.g.*, treatment facility) operated by a state, county, or municipality;

(2) The employer or a person or organization under contract to the employer to provide alcohol or drug treatment and/or education services (*e.g.*, the employer's contracted treatment provider);

(3) The sole source of therapeutically appropriate treatment under the employee's health insurance program (*e.g.*, the single substance abuse in-patient treatment program made available by the employee's insurance coverage plan); or

(4) The sole source of therapeutically appropriate treatment reasonably available to the employee (*e.g.*, the only treatment facility or education program reasonably located within the general commuting area).

§ 40.301 What is the SAP's function in the follow-up evaluation of an employee?

(a) As a SAP, after you have prescribed assistance under § 40.293, you must re-evaluate the employee to determine if the employee has successfully carried out your education and/or treatment recommendations.

(1) This is your way to gauge for the employer the employee's ability to demonstrate successful compliance with the education and/or treatment plan.

(2) Your evaluation may serve as one of the reasons the employer decides to return the employee to safety-sensitive duty.

(b) As the SAP making the follow-up evaluation determination, you must:

(1) Confer with or obtain appropriate documentation from the appropriate education and/or treatment program professionals where the employee was referred; and

(2) Conduct a face-to-face clinical interview with the employee to determine if the employee demonstrates successful compliance with your initial evaluation recommendations.

(c) (1) If the employee has demonstrated successful compliance, you must provide a written report directly to the DER highlighting your clinical determination that the employee has done so with your initial evaluation recommendation (see § 40.311(d)).

(2) You may determine that an employee has successfully demonstrated compliance even though the employee has not yet completed the full regimen of education and/or treatment you recommended or needs additional asssitance. For example, if the employee has successfully completed the 30-day in-patient program you prescribed, you may make a ''successful compliance'' determination even though you conclude that the employee has not yet completed the out-patient counseling you recommended or should continue in an aftercare program.

(d)(1) As the SAP, if you believe, as a result of the follow-up evaluation, that the employee has not demonstrated successful compliance with your recommendations, you must provide written notice directly to the DER (see § 40.311(e)).

(2) As an employer who receives the SAP's written notice that the employee has not successfully complied with the SAP's recommendations, you must not return the employee to the performance of safety-sensitive duties.

(3) As the SAP, you may conduct additional follow-up evaluation(s) if the employer determines that doing so is consistent with the employee's progress as you have reported it and with the employer's policy and/or labor-management agreements.

(4) As the employer, following a SAP report that the employee has not demonstrated successful compliance, you may take personnel action consistent

with your policy and/or labor-management agreements.

§ 40.303 What happens if the SAP believes the employee needs additional treatment, aftercare, or support group services even after the employee returns to safety-sensitive duties?

(a) As a SAP, if you believe that ongoing services (in addition to follow-up tests) are needed to assist an employee to maintain sobriety or abstinence from drug use after the employee resumes the performance of safety-sensitive duties, you must provide recommendations for these services in your follow-up evaluation report (see § 40.311(d)(10)).

(b) As an employer receiving a recommendation for these services from a SAP, you may, as part of a return-to-duty agreement with the employee, require the employee to participate in the recommended services. You may monitor and document the employee's participation in the recommended services. You may also make use of SAP and employee assistance program (EAP) services in assisting and monitoring employees' compliance with SAP recommendations. Nothing in this section permits an employer to fail to carry out its obligations with respect to follow-up testing (see § 40.309).

(c) As an employee, you are obligated to comply with the SAP's recommendations for these services. If you fail or refuse to do so, you may be subject to disciplinary action by your employer.

§ 40.305 How does the return-to-duty process conclude?

(a) As the employer, if you decide that you want to permit the employee to return to the performance of safety-sensitive functions, you must ensure that the employee takes a return-to-duty test. This test cannot occur until after the SAP has determined that the employee has successfully complied with prescribed education and/or treatment. The employee must have a negative drug test result and/or an alcohol test with an alcohol concentration of less than 0.02 before resuming performance of safety-sensitive duties.

(b) As an employer, you must not return an employee to safety-sensitive duties until the employee meets the conditions of paragraph (a) of this section. However, you are not required to return an employee to safety-sensitive duties because the employee has met these conditions. That is a personnel decision that you have the discretion to make, subject to collective bargaining agreements or other legal requirements.

(c) As a SAP or MRO, you must not make a ''fitness for duty'' determination as part of this re-evaluation unless required to do so under an applicable DOT agency regulation. It is the employer, rather than you, who must decide whether to put the employee back to work in a safety-sensitive position.

§ 40.307 What is the SAP's function in prescribing the employee's follow-up tests?

(a) As a SAP, for each employee who has committed a DOT drug or alcohol regulation violation, and who seeks to resume the performance of safety-sensitive functions, you must establish a written follow-up testing plan. You do not establish this plan until after you determine that the employee has successfully complied with your recommendations for education and/or treatment.

(b) You must present a copy of this plan directly to the DER (see § 40.311(d)(9)).

(c) You are the sole determiner of the number and frequency of follow-up tests and whether these tests will be for drugs, alcohol, or both, unless otherwise directed by the appropriate DOT agency regulation. For example, if the employee had a positive drug test, but your evaluation or the treatment program professionals determined that the employee had an alcohol problem as well, you should require that the employee have follow-up tests for both drugs and alcohol.

(d) However, you must, at a minimum, direct that the employee be subject to six unannounced follow-up tests in the first 12 months of safety-sensitive duty following the employee's return to safety-sensitive functions.

(1) You may require a greater number of follow-up tests during the first 12-month period of safety-sensitive duty (*e.g.*, you may require one test a month

during the 12-month period; you may require two tests per month during the first 6-month period and one test per month during the final 6-month period).

(2) You may also require follow-up tests during the 48 months of safety-sensitive duty following this first 12-month period.

(3) You are not to establish the actual dates for the follow-up tests you prescribe. The decision on specific dates to test is the employer's.

(4) As the employer, you must not impose additional testing requirements (*e.g.*, under company authority) on the employee that go beyond the SAP's follow-up testing plan.

(e) The requirements of the SAP's follow-up testing plan ''follow the employee'' to subsequent employers or through breaks in service.

Example 1 to Paragraph (e)*:* The employee returns to duty with Employer A. Two months afterward, after completing the first two of six follow-up tests required by the SAP's plan, the employee quits his job with Employer A and begins to work in a similar position for Employer B. The employee remains obligated to complete the four additional tests during the next 10 months of safety-sensitive duty, and Employer B is responsible for ensuring that the employee does so. Employer B learns of this obligation through the inquiry it makes under § 40.25.

Example 2 to Paragraph (e)*:* The employee returns to duty with Employer A. Three months later, after the employee completes the first two of six follow-up tests required by the SAP's plan, Employer A lays the employee off for economic or seasonal employment reasons. Four months later, Employer A recalls the employee. Employer A must ensure that the employee completes the remaining four follow-up tests during the next nine months.

(f) As the SAP, you may modify the determinations you have made concerning follow-up tests. For example, even if you recommended follow-up testing beyond the first 12-months, you can terminate the testing requirement at any time after the first year of testing. You must not, however, modify the requirement that the employee take at least six follow-up tests within the first 12 months after returning to the performance of safety-sensitive functions.

§ 40.309 What are the employer's responsibilities with respect to the SAP's directions for follow-up tests?

(a) As the employer, you must carry out the SAP's follow-up testing requirements. You may not allow the employee to continue to perform safety-sensitive functions unless follow-up testing is conducted as directed by the SAP.

(b) You should schedule follow-up tests on dates of your own choosing, but you must ensure that the tests are unannounced with no discernable pattern as to their timing, and that the employee is given no advance notice.

(c) You cannot substitute any other tests (*e.g.*, those carried out under the random testing program) conducted on the employee for this follow-up testing requirement.

(d) You cannot count a follow-up test that has been cancelled as a completed test. A cancelled follow-up test must be recollected.

§ 40.311 What are the requirements concerning SAP reports?

(a) As the SAP conducting the required evaluations, you must send the written reports required by this section in writing directly to the DER and not to a third party or entity for forwarding to the DER (except as provided in § 40.355(e)). You may, however, forward the document simultaneously to the DER and to a C/TPA.

(b) As an employer, you must ensure that you receive SAP written reports directly from the SAP performing the evaluation and that no third party or entity changed the SAP's report in any way.

(c) The SAP's written report, following an initial evaluation that determines what level of assistance is needed to address the employee's drug and/or alcohol problems, must be on the SAP's own letterhead (and not the letterhead of another service agent) signed and dated by the SAP, and must contain the following delineated items:

(1) Employee's name and SSN;

(2) Employer's name and address;

(3) Reason for the assessment (specific violation of DOT regulations and violation date);

(4) Date(s) of the assessment;

(5) SAP's education and/or treatment recommendation; and

(6) SAP's telephone number.

(d) The SAP's written report concerning a follow-up evaluation that determines the employee has demonstrated successful compliance must be on the SAP's own letterhead (and not the letterhead of another service agent), signed by the SAP and dated, and must contain the following items:

(1) Employee's name and SSN;

(2) Employer's name and address;

(3) Reason for the initial assessment (specific violation of DOT regulations and violation date);

(4) Date(s) of the initial assessment and synopsis of the treatment plan;

(5) Name of practice(s) or service(s) providing the recommended education and/or treatment;

(6) Inclusive dates of employee's program participation;

(7) Clinical characterization of employee's program participation;

(8) SAP's clinical determination as to whether the employee has demonstrated successful compliance;

(9) Follow-up testing plan;

(10) Employee's continuing care needs with specific treatment, aftercare, and/or support group services recommendations; and

(11) SAP's telephone number.

(e) The SAP's written report concerning a follow-up evaluation that determines the employee has not demonstrated successful compliance must be on the SAP's own letterhead (and not the letterhead of another service agent), signed by the SAP and dated, and must contain the following items:

(1) Employee's name and SSN;

(2) Employer's name and address;

(3) Reason for the initial assessment (specific DOT violation and date);

(4) Date(s) of initial assessment and synopsis of treatment plan;

(5) Name of practice(s) or service(s) providing the recommended education and/or treatment;

(6) Inclusive dates of employee's program participation;

(7) Clinical characterization of employee's program participation;

(8) Date(s) of the first follow-up evaluation;

(9) Date(s) of any further follow-up evaluation the SAP has scheduled;

(10) SAP's clinical reasons for determining that the employee has not demonstrated successful compliance; and

(11) SAP's telephone number.

(f) As a SAP, you must also provide these written reports directly to the employee if the employee has no current employer and to the gaining DOT regulated employer in the event the employee obtains another transportation industry safety-sensitive position.

(g) As a SAP, you are to maintain copies of your reports to employers for 5 years, and your employee clinical records in accordance with Federal, state, and local laws regarding record maintenance, confidentiality, and release of information. You must make these records available, on request, to DOT agency representatives (*e.g.*, inspectors conducting an audit or safety investigation) and representatives of the NTSB in an accident investigation.

(h) As an employer, you must maintain your reports from SAPs for 5 years from the date you received them.

§ 40.313 Where is other information on SAP functions and the return-to-duty process found in this regulation?

You can find other information on the role and functions of SAPs in the following sections of this part:

§ 40.3—Definition.

§ 40.347—Service agent assistance with SAP-required follow-up testing.

§ 40.355—Transmission of SAP reports.

§ 40.329(c)—Making SAP reports available to employees on request.

APPENDIX E TO PART 40—SAP EQUIVALENCY REQUIREMENTS FOR CERTIFICATION ORGANIZATIONS.

Subpart P—Confidentiality and Release of Information

§ 40.321 What is the general confidentiality rule for drug and alcohol test information?

Except as otherwise provided in this subpart, as a service agent or employer participating in the DOT drug or alcohol testing process, you are prohibited from releasing individual test results or medical information about an employee to third parties without the employee's specific written consent.

(a) A ''third party'' is any person or organization to whom other subparts of this regulation do not explicitly authorize or require the transmission of information in the course of the drug or alcohol testing process.

(b) ''Specific written consent'' means a statement signed by the employee that he or she agrees to the release of a particular piece of information to a particular, explicitly identified, person or organization at a particular time. ''Blanket releases,'' in which an employee agrees to a release of a category of information (*e.g.*, all test results) or to release information to a category of parties (*e.g.*, other employers who are members of a C/TPA, companies to which the employee may apply for employment), are prohibited under this part.

§ 40.323 May program participants release drug or alcohol test information in connection with legal proceedings?

(a) As an employer, you may release information pertaining to an employee's drug or alcohol test without the employee's consent in certain legal proceedings.

(1) These proceedings include a lawsuit (*e.g.*, a wrongful discharge action), grievance (*e.g.*, an arbitration concerning disciplinary action taken by the employer), or administrative proceeding (*e.g.*, an unemployment compensation hearing) brought by, or on behalf of, an employee and resulting from a positive DOT drug or alcohol test or a refusal to test (including, but not limited to, adulterated or substituted test results).

(2) These proceedings also include a criminal or civil action resulting from an employee's performance of safety-sensitive duties, in which a court of competent jurisdiction determines that the drug or alcohol test information sought is relevant to the case and issues an order directing the employer to produce the information. For example, in personal injury litigation following a truck or bus collision, the court could determine that a post-accident drug test result of an employee is relevant to determining whether the driver or the driver's employer was negligent. The employer is authorized to respond to the court's order to produce the records.

(b) In such a proceeding, you may release the information to the decisionmaker in the proceeding (*e.g.*, the court in a lawsuit). You may release the information only with a binding stipulation that the decisionmaker to whom it is released will make it available only to parties to the proceeding.

(c) If you are a service agent, and the employer requests its employee's drug or alcohol testing information from you to use in a legal proceeding as authorized in paragraph (a) of this section (*e.g.*, the laboratory's data package), you must provide the requested information to the employer.

(d) As an employer or service agent, you must immediately notify the employee in writing of any information you release under this section.

§ 40.325 [Reserved]

§ 40.327 When must the MRO report medical information gathered in the verification process?

(a) As the MRO, you must, except as provided in paragraph (c) of this section, report drug test results and medical information you learned as part of the verification process to third parties without the employee's consent if you determine, in your reasonable medical judgment, that:

(1) The information is likely to result in the employee being determined to be medically unqualified under an applicable DOT agency regulation; or

(2) The information indicates that continued performance by the employee of his or her safety-sensitive function is likely to pose a significant safety risk.

(b) The third parties to whom you are authorized to provide information by this section include the employer, a physician or other health care provider responsible for determining the medical qualifications of the employee under an applicable DOT agency safety regulation, a SAP evaluating the employee as part of the return to duty process (see § 40.293(g)), a DOT agency, or the National Transportation Safety Board in the course of an accident investigation.

(c) If the law of a foreign country (*e.g.*, Canada) prohibits you from providing medical information to the employer, you may comply with that prohibition.

§ 40.329 What information must laboratories, MROs, and other service agents release to employees?

(a) As an MRO or service agent you must provide, within 10 business days of receiving a written request from an employee, copies of any records pertaining to the employee's use of alcohol and/or drugs, including records of the employee's DOT-mandated drug and/or alcohol tests. You may charge no more than the cost of preparation and reproduction for copies of these records.

(b) As a laboratory, you must provide, within 10 business days of receiving a written request from an employee, and made through the MRO, the records relating to the results of the employee's drug test (*i.e.*, laboratory report and data package). You may charge no more than the cost of preparation and reproduction for copies of these records.

(c) As a SAP, you must make available to an employee, on request, a copy of all SAP reports (see § 40.311). However, you must redact follow-up testing information from the report before providing it to the employee.

[65 FR 79526, Dec. 19, 2000, as amended at 66 FR 41954, Aug. 9, 2001]

§ 40.331 To what additional parties must employers and service agents release information?

As an employer or service agent you must release information under the following circumstances:

(a) If you receive a specific, written consent from an employee authorizing the release of information about that employee's drug or alcohol tests to an identified person, you must provide the information to the identified person. For example, as an employer, when you receive a written request from a former employee to provide information to a subsequent employer, you must do so. In providing the information, you must comply with the terms of the employee's consent.

(b) If you are an employer, you must, upon request of DOT agency representatives, provide the following:

(1) Access to your facilities used for this part and DOT agency drug and alcohol program functions.

(2) All written, printed, and computer-based drug and alcohol program records and reports (including copies of name-specific records or reports), files, materials, data, documents/documentation, agreements, contracts, policies, and statements that are required by this part and DOT agency regulations. You must provide this information at your principal place of business in the time required by the DOT agency.

(3) All items in paragraph (b)(2) of this section must be easily accessible, legible, and provided in an organized manner. If electronic records do not meet these standards, they must be converted to printed documentation that meets these standards.

(c) If you are a service agent, you must, upon request of DOT agency representatives, provide the following:

(1) Access to your facilities used for this part and DOT agency drug and alcohol program functions.

(2) All written, printed, and computer-based drug and alcohol program records and reports (including copies of name-specific records or reports), files, materials, data, documents/documentation, agreements, contracts, policies, and statements that are required by this part and DOT agency regulations. You must provide this information at your principal place of business in the time required by the DOT agency.

(3) All items in paragraph (c)(2) of this section must be easily accessible, legible, and provided in an organized manner. If electronic records do not meet these standards, they must be converted to printed documentation that meets these standards.

(d) If requested by the National Transportation Safety Board as part of an accident investigation, you must provide information concerning post-accident tests administered after the accident.

(e) If requested by a Federal, state or local safety agency with regulatory authority over you or the employee, you must provide drug and alcohol test records concerning the employee.

(f) Except as otherwise provided in this part, as a laboratory you must not release or provide a specimen or a part of a specimen to a requesting party, without first obtaining written consent from ODAPC. If a party seeks a court order directing you to release a specimen or part of a specimen contrary to any provision of this part, you must take necessary legal steps to contest the issuance of the order (*e.g.*, seek to quash a subpoena, citing the requirements of §40.13). This part does not require you to disobey a court order, however.

(g) Notwithstanding any other provision of this Part, as an employer of Commercial Motor Vehicle (CMV) drivers holding commercial driving licenses (CDLs) or as a third party administrator for owner-operator CMV drivers with CDLs, you are authorized to comply with State laws requiring you to provide to State CDL licensing authorities information about all violations of DOT drug and alcohol testing rules (including positive tests and refusals) by any CMV driver holding a CDL.

[65 FR 79526, Dec. 19, 2000, as amended at 66 FR 41955, Aug. 9, 2001; 73 FR 33737, June 13, 2008]

§40.333 What records must employers keep?

(a) As an employer, you must keep the following records for the following periods of time:

(1) You must keep the following records for five years:

(i) Records of alcohol test results indicating an alcohol concentration of 0.02 or greater;

(ii) Records of verified positive drug test results;

(iii) Documentation of refusals to take required alcohol and/or drug tests (including substituted or adulterated drug test results);

(iv) SAP reports; and

(v) All follow-up tests and schedules for follow-up tests.

(2) You must keep records for three years of information obtained from previous employers under §40.25 concerning drug and alcohol test results of employees.

(3) You must keep records of the inspection, maintenance, and calibration of EBTs, for two years.

(4) You must keep records of negative and cancelled drug test results and alcohol test results with a concentration of less than 0.02 for one year.

(b) You do not have to keep records related to a program requirement that does not apply to you (*e.g.*, a maritime employer who does not have a DOT-mandated random alcohol testing program need not maintain random alcohol testing records).

(c) You must maintain the records in a location with controlled access.

(d) A service agent may maintain these records for you. However, you must ensure that you can produce these records at your principal place of business in the time required by the DOT agency. For example, as a motor carrier, when an FMCSA inspector requests your records, you must ensure that you can provide them within two business days.

(e) If you store records electronically, where permitted by this part, you must ensure that the records are easily accessible, legible, and formatted and stored in an organized manner. If electronic records do not meet these criteria, you must convert them to printed documentation in a rapid and readily auditable manner, at the request of DOT agency personnel.

[65 FR 79526, Dec. 19, 2000, as amended at 66 FR 41955, Aug. 9, 2001]

Subpart Q—Roles and Responsibilities of Service Agents

§40.341 Must service agents comply with DOT drug and alcohol testing requirements?

(a) As a service agent, the services you provide to transportation employers must meet the requirements of this part and the DOT agency drug and alcohol testing regulations.

(b) If you do not comply, DOT may take action under the Public Interest Exclusions procedures of this part (see Subpart R of this part) or applicable provisions of other DOT agency regulations.

§ 40.343 What tasks may a service agent perform for an employer?

As a service agent, you may perform for employers the tasks needed to comply with DOT agency drug and alcohol testing regulations, subject to the requirements and limitations of this part.

§ 40.345 In what circumstances may a C/TPA act as an intermediary in the transmission of drug and alcohol testing information to employers?

(a) As a C/TPA or other service agent, you may act as an intermediary in the transmission of drug and alcohol testing information in the circumstances specified in this section only if the employer chooses to have you do so. Each employer makes the decision about whether to receive some or all of this information from you, acting as an intermediary, rather than directly from the service agent who originates the information (*e.g.,* an MRO or BAT).

(b) The specific provisions of this part concerning which you may act as an intermediary are listed in Appendix F to this part. These are the only situations in which you may act as an intermediary. You are prohibited from doing so in all other situations.

(c) In every case, you must ensure that, in transmitting information to employers, you meet all requirements (*e.g.,* concerning confidentiality and timing) that would apply if the service agent originating the information (*e.g.,* an MRO or collector) sent the information directly to the employer. For example, if you transmit drug testing results from MROs to DERs, you must transmit each drug test result to the DER in compliance with the MRO requirements set forth in § 40.167 .

§ 40.347 What functions may C/TPAs perform with respect to administering testing?

As a C/TPA, except as otherwise specified in this part, you may perform the following functions for employers concerning random selection and other selections for testing.

(a) You may operate random testing programs for employers and may assist (*i.e.,* through contracting with laboratories or collection sites, conducting collections) employers with other types of testing (*e.g.,* pre-employment, post-accident, reasonable suspicion, return-to-duty, and follow-up).

(b) You may combine employees from more than one employer or one transportation industry in a random pool if permitted by all the DOT agency drug and alcohol testing regulations involved.

(1) If you combine employees from more than one transportation industry, you must ensure that the random testing rate is at least equal to the highest rate required by each DOT agency.

(2) Employees not covered by DOT agency regulations may not be part of the same random pool with DOT covered employees.

(c) You may assist employers in ensuring that follow-up testing is conducted in accordance with the plan established by the SAP. However, neither you nor the employer are permitted to randomly select employees from a ''follow-up pool'' for follow-up testing.

§ 40.349 What records may a service agent receive and maintain?

(a) Except where otherwise specified in this part, as a service agent you may receive and maintain all records concerning DOT drug and alcohol testing programs, including positive, negative, and refusal to test individual test results. You do not need the employee's consent to receive and maintain these records.

(b) You may maintain all information needed for operating a drug/alcohol program (*e.g.,* CCFs, ATFs, names of employees in random pools, random selection lists, copies of notices to employers of selected employees) on behalf of an employer.

(c) If a service agent originating drug or alcohol testing information, such as an MRO or BAT, sends the information directly to the DER, he or she may also provide the information simultaneously to you, as a C/TPA or other service agent who maintains this information for the employer.

(d) If you are serving as an intermediary in transmitting information that is required to be provided to the employer, you must ensure that it reaches the employer in the same time periods required elsewhere in this part.

(e) You must ensure that you can make available to the employer within two business days any information the employer is asked to produce by a DOT agency representative.

(f) On request of an employer, you must, at any time on the request of an employer, transfer immediately all records pertaining to the employer and its employees to the employer or to any other service agent the employer designates. You must carry out this transfer as soon as the employer requests it. You are not required to obtain employee consent for this transfer. You must not charge more than your reasonable administrative costs for conducting this transfer. You may not charge a fee for the release of these records.

(g) If you are planning to go out of business or your organization will be bought by or merged with another organization, you must immediately notify all employers and offer to transfer all records pertaining to the employer and its employees to the employer or to any other service agent the employer designates. You must carry out this transfer as soon as the employer requests it. You are not required to obtain employee consent for this transfer. You must not charge more than your reasonable administrative costs for conducting this transfer. You may not charge a fee for the release of these records.

[65 FR 79526, Dec. 19, 2000, as amended at 66 FR 41955, Aug. 9, 2001]

§ 40.351 What confidentiality requirements apply to service agents?

Except where otherwise specified in this part, as a service agent the following confidentiality requirements apply to you:

(a) When you receive or maintain confidential information about employees (*e.g.*, individual test results), you must follow the same confidentiality regulations as the employer with respect to the use and release of this information.

(b) You must follow all confidentiality and records retention requirements applicable to employers.

(c) You may not provide individual test results or other confidential information to another employer without a specific, written consent from the employee. For example, suppose you are a C/TPA that has employers X and Y as clients. Employee Jones works for X, and you maintain Jones' drug and alcohol test for X. Jones wants to change jobs and work for Y. You may not inform Y of the result of a test conducted for X without having a specific, written consent from Jones. Likewise, you may not provide this information to employer Z, who is not a C/TPA member, without this consent.

(d) You must not use blanket consent forms authorizing the release of employee testing information.

(e) You must establish adequate confidentiality and security measures to ensure that confidential employee records are not available to unauthorized persons. This includes protecting the physical security of records, access controls, and computer security measures to safeguard confidential data in electronic data bases.

§ 40.353 What principles govern the interaction between MROs and other service agents?

As a service agent other than an MRO (*e.g.*, a C/TPA), the following principles govern your interaction with MROs:

(a) You may provide MRO services to employers, directly or through contract, if you meet all applicable provisions of this part.

(b) If you employ or contract for an MRO, the MRO must perform duties independently and confidentially. When you have a relationship with an MRO, you must structure the relationship to ensure that this independence and confidentiality are not compromised. Specific means (including both physical and operational measures, as appropriate) to separate MRO functions and other service agent functions are essential.

(c) Only your staff who are actually under the day-to-day supervision and control of an MRO with respect to MRO functions may perform these functions. This does not mean that those staff may not perform other functions at other times. However, the designation of your staff to perform MRO functions under MRO supervision

must be limited and not used as a subterfuge to circumvent confidentiality and other requirements of this part and DOT agency regulations. You must ensure that MRO staff operate under controls sufficient to ensure that the independence and confidentiality of the MRO process are not compromised.

(d) Like other MROs, an MRO you employ or contract with must personally conduct verification interviews with employees and must personally make all verification decisions. Consequently, your staff cannot perform these functions.

§ 40.355 What limitations apply to the activities of service agents?

As a service agent, you are subject to the following limitations concerning your activities in the DOT drug and alcohol testing program.

(a) You must not require an employee to sign a consent, release, waiver of liability, or indemnification agreement with respect to any part of the drug or alcohol testing process covered by this part (including, but not limited to, collections, laboratory testing, MRO, and SAP services). No one may do so on behalf of a service agent.

(b) You must not act as an intermediary in the transmission of drug test results from the laboratory to the MRO. That is, the laboratory may not send results to you, with you in turn sending them to the MRO for verification. For example, a practice in which the laboratory transmits results to your computer system, and you then assign the results to a particular MRO, is not permitted.

(c) You must not transmit drug test results directly from the laboratory to the employer (by electronic or other means) or to a service agent who forwards them to the employer. All confirmed laboratory results must be processed by the MRO before they are released to any other party.

(d) You must not act as an intermediary in the transmission of alcohol test results of 0.02 or higher from the STT or BAT to the DER.

(e) Except as provided in paragraph (f) of this section, you must not act as an intermediary in the transmission of individual SAP reports to the actual employer. That is, the SAP may not send such reports to you, with you in turn sending them to the actual employer. However, you may maintain individual SAP summary reports and follow-up testing plans after they are sent to the DER, and the SAP may transmit such reports to you simultaneously with sending them to the DER.

(f) As an exception to paragraph (e) of this section, you may act as an intermediary in the transmission of SAP report from the SAP to an owner-operator or other self-employed individual.

(g) Except as provided in paragraph (h) of this section, you must not make decisions to test an employee based upon reasonable suspicion, post-accident, return-to-duty, and follow-up determination criteria. These are duties the actual employer cannot delegate to a C/TPA. You may, however, provide advice and information to employers regarding these testing issues and how the employer should schedule required testing.

(h) As an exception to paragraph (g) of this section, you may make decisions to test an employee based upon reasonable suspicion, post-accident, return-to-duty, and follow-up determination criteria with respect to an owner-operator or other self-employed individual.

(i) Except as provided in paragraph (j) of this section, you must not make a determination that an employee has refused a drug or alcohol test. This is a non-delegable duty of the actual employer. You may, however, provide advice and information to employers regarding refusal-to-test issues.

(j) As an exception to paragraph (i) of this section, you may make a determination that an employee has refused a drug or alcohol test, if:

(1) You schedule a required test for an owner-operator or other self-employed individual, and the individual fails to appear for the test without a legitimate reason; or

(2) As an MRO, you determine that an individual has refused to test on the basis of adulteration or substitution.

(k) You must not act as a DER. For example, while you may be responsible for transmitting information to the employer about test results, you must

not act on behalf of the employer in actions to remove employees from safety-sensitive duties.

(l) In transmitting documents to laboratories, you must ensure that you send to the laboratory that conducts testing only the laboratory copy of the CCF. You must not transmit other copies of the CCF or any ATFs to the laboratory.

(m) You must not impose conditions or requirements on employers that DOT regulations do not authorize. For example, as a C/TPA serving employers in the pipeline or motor carrier industry, you must not require employers to have provisions in their DOT plans that PHMSA or FMCSA regulations do not require.

(n) You must not intentionally delay the transmission of drug or alcohol testing-related documents concerning actions you have performed, because of a payment dispute or other reasons.

Example 1 to Paragraph (n)*:* A laboratory that has tested a specimen must not delay transmitting the documentation of the test result to an MRO because of a billing or payment dispute with the MRO or a C/TPA.

Example 2 to Paragraph (n)*:* An MRO or SAP who has interviewed an employee must not delay sending a verified test result or SAP report to the employer because of such a dispute with the employer or employee.

Example 3 to Paragraph (n)*:* A collector who has performed a urine specimen collection must not delay sending the drug specimen and CCF to the laboratory because of a payment or other dispute with the laboratory or a C/TPA.

Example 4 to Paragraph (n)*:* A BAT who has conducted an alcohol test must not delay sending test result information to an employer or C/TPA because of a payment or other dispute with the employer or C/TPA.

(o) While you must follow the DOT agency regulations, the actual employer remains accountable to DOT for compliance, and your failure to implement any aspect of the program as required in this part and other applicable DOT agency regulations makes the employer subject to enforcement action by the Department.

[65 FR 79526, Dec. 19, 2000, as amended at 66 FR 41955, Aug. 9, 2001; 71 FR 49384, Aug. 23, 2006]

Subpart R—Public Interest Exclusions

§ 40.361 What is the purpose of a public interest exclusion (PIE)?

(a) To protect the public interest, including protecting transportation employers and employees from serious noncompliance with DOT drug and alcohol testing rules, the Department's policy is to ensure that employers conduct business only with responsible service agents.

(b) The Department therefore uses PIEs to exclude from participation in DOT's drug and alcohol testing program any service agent who, by serious noncompliance with this part or other DOT agency drug and alcohol testing regulations, has shown that it is not currently acting in a responsible manner.

(c) A PIE is a serious action that the Department takes only to protect the public interest. We intend to use PIEs only to remedy situations of serious noncompliance. PIEs are not used for the purpose of punishment.

(d) Nothing in this subpart precludes a DOT agency or the Inspector General from taking other action authorized by its regulations with respect to service agents or employers that violate its regulations.

§ 40.363 On what basis may the Department issue a PIE?

(a) If you are a service agent, the Department may issue a PIE concerning you if we determine that you have failed or refused to provide drug or alcohol testing services consistent with the requirements of this part or a DOT agency drug and alcohol regulation.

(b) The Department also may issue a PIE if you have failed to cooperate with DOT agency representatives concerning inspections, complaint investigations, compliance and enforcement reviews, or requests for documents and other information about compliance with this part or DOT agency drug and alcohol regulations.

§ 40.365 What is the Department's policy concerning starting a PIE proceeding?

(a) It is the Department's policy to start a PIE proceeding only in cases of

serious, uncorrected noncompliance with the provisions of this part, affecting such matters as safety, the outcomes of test results, privacy and confidentiality, due process and fairness for employees, the honesty and integrity of the testing program, and cooperation with or provision of information to DOT agency representatives.

(b) The following are examples of the kinds of serious noncompliance that, as a matter of policy, the Department views as appropriate grounds for starting a PIE proceeding. These examples are not intended to be an exhaustive or exclusive list of the grounds for starting a PIE proceeding. We intend them to illustrate the level of seriousness that the Department believes supports starting a PIE proceeding. The examples follow:

(1) For an MRO, verifying tests positive without interviewing the employees as required by this part or providing MRO services without meeting the qualifications for an MRO required by this part;

(2) For a laboratory, refusing to provide information to the Department, an employer, or an employee as required by this part; failing or refusing to conduct a validity testing program when required by this part; or a pattern or practice of testing errors that result in the cancellation of tests. (As a general matter of policy, the Department does not intend to initiate a PIE proceeding concerning a laboratory with respect to matters on which HHS initiates certification actions under its laboratory guidelines.);

(3) For a collector, a pattern or practice of directly observing collections when doing so is unauthorized, or failing or refusing to directly observe collections when doing so is mandatory;

(4) For collectors, BATs, or STTs, a pattern or practice of using forms, testing equipment, or collection kits that do not meet the standards in this part;

(5) For a collector, BAT, or STT, a pattern or practice of ''fatal flaws'' or other significant uncorrected errors in the collection process;

(6) For a laboratory, MRO or C/TPA, failing or refusing to report tests results as required by this part or DOT agency regulations;

(7) For a laboratory, falsifying, concealing, or destroying documentation concerning any part of the drug testing process, including, but not limited to, documents in a ''litigation package'';

(8) For SAPs, providing SAP services while not meeting SAP qualifications required by this part or performing evaluations without face-to-face interviews;

(9) For any service agent, maintaining a relationship with another party that constitutes a conflict of interest under this part (*e.g.*, a laboratory that derives a financial benefit from having an employer use a specific MRO);

(10) For any service agent, representing falsely that the service agent or its activities is approved or certified by the Department or a DOT agency;

(11) For any service agent, disclosing an employee's test result information to any party this part or a DOT agency regulation does not authorize, including by obtaining a ''blanket'' consent from employees or by creating a data base from which employers or others can retrieve an employee's DOT test results without the specific consent of the employee;

(12) For any service agent, interfering or attempting to interfere with the ability of an MRO to communicate with the Department, or retaliating against an MRO for communicating with the Department;

(13) For any service agent, directing or recommending that an employer fail or refuse to implement any provision of this part; or

(14) With respect to noncompliance with a DOT agency regulation, conduct that affects important provisions of Department-wide concern (*e.g.*, failure to properly conduct the selection process for random testing).

§ 40.367 Who initiates a PIE proceeding?

The following DOT officials may initiate a PIE proceeding:

(a) The drug and alcohol program manager of a DOT agency;

(b) An official of ODAPC, other than the Director; or

(c) The designee of any of these officials.

§ 40.369 What is the discretion of an initiating official in starting a PIE proceeding?

(a) Initiating officials have broad discretion in deciding whether to start a PIE proceeding.

(b) In exercising this discretion, the initiating official must consider the Department's policy regarding the seriousness of the service agent's conduct (see § 40.365) and all information he or she has obtained to this point concerning the facts of the case. The initiating official may also consider the availability of the resources needed to pursue a PIE proceeding.

(c) A decision not to initiate a PIE proceeding does not necessarily mean that the Department regards a service agent as being in compliance or that the Department may not use other applicable remedies in a situation of noncompliance.

§ 40.371 On what information does an initiating official rely in deciding whether to start a PIE proceeding?

(a) An initiating official may rely on credible information from any source as the basis for starting a PIE proceeding.

(b) Before sending a correction notice (see § 40.373), the initiating official informally contacts the service agent to determine if there is any information that may affect the initiating official's determination about whether it is necessary to send a correction notice. The initiating official may take any information resulting from this contact into account in determining whether to proceed under this subpart.

§ 40.373 Before starting a PIE proceeding, does the initiating official give the service agent an opportunity to correct problems?

(a) If you are a service agent, the initiating official must send you a correction notice before starting a PIE proceeding.

(b) The correction notice identifies the specific areas in which you must come into compliance in order to avoid being subject to a PIE proceeding.

(c) If you make and document changes needed to come into compliance in the areas listed in the correction notice to the satisfaction of the initiating official within 60 days of the date you receive the notice, the initiating official does not start a PIE proceeding. The initiating official may conduct appropriate fact finding to verify that you have made and maintained satisfactory corrections. When he or she is satisfied that you are in compliance, the initiating official sends you a notice that the matter is concluded.

§ 40.375 How does the initiating official start a PIE proceeding?

(a) As a service agent, if your compliance matter is not correctable (see § 40.373(a)), or if have not resolved compliance matters as provided in § 40.373(c), the initiating official starts a PIE proceeding by sending you a notice of proposed exclusion (NOPE). The NOPE contains the initiating official's recommendations concerning the issuance of a PIE, but it is not a decision by the Department to issue a PIE.

(b) The NOPE includes the following information:

(1) A statement that the initiating official is recommending that the Department issue a PIE concerning you;

(2) The factual basis for the initiating official's belief that you are not providing drug and/or alcohol testing services to DOT-regulated employers consistent with the requirements of this part or are in serious noncompliance with a DOT agency drug and alcohol regulation;

(3) The factual basis for the initiating official's belief that your noncompliance has not been or cannot be corrected;

(4) The initiating official's recommendation for the scope of the PIE;

(5) The initiating official's recommendation for the duration of the PIE; and

(6) A statement that you may contest the issuance of the proposed PIE, as provided in § 40.379.

(c) The initiating official sends a copy of the NOPE to the ODAPC Director at the same time he or she sends the NOPE to you.

§ 40.377 Who decides whether to issue a PIE?

(a) The ODAPC Director, or his or her designee, decides whether to issue a

PIE. If a designee is acting as the decisionmaker, all references in this subpart to the Director refer to the designee.

(b) To ensure his or her impartiality, the Director plays no role in the initiating official's determination about whether to start a PIE proceeding.

(c) There is a ''firewall'' between the initiating official and the Director. This means that the initiating official and the Director are prohibited from having any discussion, contact, or exchange of information with one another about the matter, except for documents and discussions that are part of the record of the proceeding.

§ 40.379 How do you contest the issuance of a PIE?

(a) If you receive a NOPE, you may contest the issuance of the PIE.

(b) If you want to contest the proposed PIE, you must provide the Director information and argument in opposition to the proposed PIE in writing, in person, and/or through a representative. To contest the proposed PIE, you must take one or more of the steps listed in this paragraph (b) within 30 days after you receive the NOPE.

(1) You may request that the Director dismiss the proposed PIE without further proceedings, on the basis that it does not concern serious noncompliance with this part or DOT agency regulations, consistent with the Department's policy as stated in § 40.365.

(2) You may present written information and arguments, consistent with the provisions of § 40.381, contesting the proposed PIE.

(3) You may arrange with the Director for an informal meeting to present your information and arguments.

(c) If you do not take any of the actions listed in paragraph (b) of this section within 30 days after you receive the NOPE, the matter proceeds as an uncontested case. In this event, the Director makes his or her decision based on the record provided by the initiating official (*i.e.*, the NOPE and any supporting information or testimony) and any additional information the Director obtains.

§ 40.381 What information do you present to contest the proposed issuance of a PIE?

(a) As a service agent who wants to contest a proposed PIE, you must present at least the following information to the Director:

(1) Specific facts that contradict the statements contained in the NOPE (see § 40.375(b)(2) and (3)). A general denial is insufficient to raise a genuine dispute over facts material to the issuance of a PIE;

(2) Identification of any existing, proposed or prior PIE; and

(3) Identification of your affiliates, if any.

(b) You may provide any information and arguments you wish concerning the proposed issuance, scope and duration of the PIE (see § 40.375(b)(4) and (5)).

(c) You may provide any additional relevant information or arguments concerning any of the issues in the matter.

§ 40.383 What procedures apply if you contest the issuance of a PIE?

(a) DOT conducts PIE proceedings in a fair and informal manner. The Director may use flexible procedures to allow you to present matters in opposition. The Director is not required to follow formal rules of evidence or procedure in creating the record of the proceeding.

(b) The Director will consider any information or argument he or she determines to be relevant to the decision on the matter.

(c) You may submit any documentary evidence you want the Director to consider. In addition, if you have arranged an informal meeting with the Director, you may present witnesses and confront any person the initiating official presents as a witness against you.

(d) In cases where there are material factual issues in dispute, the Director or his or her designee may conduct additional fact-finding.

(e) If you have arranged a meeting with the Director, the Director will make a transcribed record of the meeting available to you on your request. You must pay the cost of transcribing and copying the meeting record.

§ 40.385 Who bears the burden of proof in a PIE proceeding?

(a) As the proponent of issuing a PIE, the initiating official bears the burden of proof.

(b) This burden is to demonstrate, by a preponderance of the evidence, that the service agent was in serious noncompliance with the requirements of this part for drug and/or alcohol testing-related services or with the requirements of another DOT agency drug and alcohol testing regulation.

§ 40.387 What matters does the Director decide concerning a proposed PIE?

(a) Following the service agent's response (see § 40.379(b)) or, if no response is received, after 30 days have passed from the date on which the service agent received the NOPE, the Director may take one of the following steps:

(1) In response to a request from the service agent (see § 40.379(b)(1)) or on his or her own motion, the Director may dismiss a PIE proceeding if he or she determines that it does not concern serious noncompliance with this part or DOT agency regulations, consistent with the Department's policy as stated in § 40.365.

(i) If the Director dismisses a proposed PIE under this paragraph (a), the action is closed with respect to the noncompliance alleged in the NOPE.

(ii) The Department may initiate a new PIE proceeding against you on the basis of different or subsequent conduct that is in noncompliance with this part or other DOT drug and alcohol testing rules.

(2) If the Director determines that the initiating official's submission does not have complete information needed for a decision, the Director may remand the matter to the initiating official. The initiating official may resubmit the matter to the Director when the needed information is complete. If the basis for the proposed PIE has changed, the initiating official must send an amended NOPE to the service agent.

(b) The Director makes determinations concerning the following matters in any PIE proceeding that he or she decides on the merits:

(1) Any material facts that are in dispute;

(2) Whether the facts support issuing a PIE;

(3) The scope of any PIE that is issued; and

(4) The duration of any PIE that is issued.

§ 40.389 What factors may the Director consider?

This section lists examples of the kind of mitigating and aggravating factors that the Director may consider in determining whether to issue a PIE concerning you, as well as the scope and duration of a PIE. This list is not exhaustive or exclusive. The Director may consider other factors if appropriate in the circumstances of a particular case. The list of examples follows:

(a) The actual or potential harm that results or may result from your noncompliance;

(b) The frequency of incidents and/or duration of the noncompliance;

(c) Whether there is a pattern or prior history of noncompliance;

(d) Whether the noncompliance was pervasive within your organization, including such factors as the following:

(1) Whether and to what extent your organization planned, initiated, or carried out the noncompliance;

(2) The positions held by individuals involved in the noncompliance, and whether your principals tolerated their noncompliance; and

(3) Whether you had effective standards of conduct and control systems (both with respect to your own organization and any contractors or affiliates) at the time the noncompliance occurred;

(e) Whether you have demonstrated an appropriate compliance disposition, including such factors as the following:

(1) Whether you have accepted responsibility for the noncompliance and recognize the seriousness of the conduct that led to the cause for issuance of the PIE;

(2) Whether you have cooperated fully with the Department during the investigation. The Director may consider when the cooperation began and whether you disclosed all pertinent information known to you;

(3) Whether you have fully investigated the circumstances of the noncompliance forming the basis for the PIE and, if so, have made the result of the investigation available to the Director;

(4) Whether you have taken appropriate disciplinary action against the individuals responsible for the activity that constitutes the grounds for issuance of the PIE; and

(5) Whether your organization has taken appropriate corrective actions or remedial measures, including implementing actions to prevent recurrence;

(f) With respect to noncompliance with a DOT agency regulation, the degree to which the noncompliance affects matters common to the DOT drug and alcohol testing program;

(g) Other factors appropriate to the circumstances of the case.

§ 40.391 What is the scope of a PIE?

(a) The scope of a PIE is the Department's determination about the divisions, organizational elements, types of services, affiliates, and/or individuals (including direct employees of a service agent and its contractors) to which a PIE applies.

(b) If, as a service agent, the Department issues a PIE concerning you, the PIE applies to all your divisions, organizational elements, and types of services that are involved with or affected by the noncompliance that forms the factual basis for issuing the PIE.

(c) In the NOPE (see § 40.375(b)(4)), the initiating official sets forth his or her recommendation for the scope of the PIE. The proposed scope of the PIE is one of the elements of the proceeding that the service agent may contest (see § 40.381(b)) and about which the Director makes a decision (see § 40.387(b)(3)).

(d) In recommending and deciding the scope of the PIE, the initiating official and Director, respectively, must take into account the provisions of paragraphs (e) through (j) of this section.

(e) The pervasiveness of the noncompliance within a service agent's organization (see § 40.389(d)) is an important consideration in determining the scope of a PIE. The appropriate scope of a PIE grows broader as the pervasiveness of the noncompliance increases.

(f) The application of a PIE is not limited to the specific location or employer at which the conduct that forms the factual basis for issuing the PIE was discovered.

(g) A PIE applies to your affiliates, if the affiliate is involved with or affected by the conduct that forms the factual basis for issuing the PIE.

(h) A PIE applies to individuals who are officers, employees, directors, shareholders, partners, or other individuals associated with your organization in the following circumstances:

(1) Conduct forming any part of the factual basis of the PIE occurred in connection with the individual's performance of duties by or on behalf of your organization; or

(2) The individual knew of, had reason to know of, approved, or acquiesced in such conduct. The individual's acceptance of benefits derived from such conduct is evidence of such knowledge, acquiescence, or approval.

(i) If a contractor to your organization is solely responsible for the conduct that forms the factual basis for a PIE, the PIE does not apply to the service agent itself unless the service agent knew or should have known about the conduct and did not take action to correct it.

(j) PIEs do not apply to drug and alcohol testing that DOT does not regulate.

(k) The following examples illustrate how the Department intends the provisions of this section to work:

Example 1 to § 40.391. Service Agent P provides a variety of drug testing services. P's SAP services are involved in a serious violation of this Part 40. However, P's other services fully comply with this part, and P's overall management did not plan or concur in the noncompliance, which in fact was contrary to P's articulated standards. Because the noncompliance was isolated in one area of the organization's activities, and did not pervade the entire organization, the scope of the PIE could be limited to SAP services.

Example 2 to § 40.391. Service Agent Q provides a similar variety of services. The conduct forming the factual basis for a PIE concerns collections for a transit authority. As in Example 1, the noncompliance is not pervasive throughout Q's organization. The PIE would apply to collections at all locations served by Q, not just the particular transit

authority or not just in the state in which the transit authority is located.

Example 3 to § 40.391. Service Agent R provides a similar array of services. One or more of the following problems exists: R's activities in several areas—collections, MROs, SAPs, protecting the confidentiality of information—are involved in serious noncompliance; DOT determines that R's management knew or should have known about serious noncompliance in one or more areas, but management did not take timely corrective action; or, in response to an inquiry from DOT personnel, R's management refuses to provide information about its operations. In each of these three cases, the scope of the PIE would include all aspects of R's services.

Example 4 to § 40.391. Service Agent W provides only one kind of service (*e.g.,* laboratory or MRO services). The Department issues a PIE concerning these services. Because W only provides this one kind of service, the PIE necessarily applies to all its operations.

Example 5 to § 40.391. Service Agent X, by exercising reasonably prudent oversight of its collection contractor, should have known that the contractor was making numerous ''fatal flaws'' in tests. Alternatively, X received a correction notice pointing out these problems in its contractor's collections. In neither case did X take action to correct the problem. X, as well as the contractor, would be subject to a PIE with respect to collections.

Example 6 to § 40.391. Service Agent Y could not reasonably have known that one of its MROs was regularly failing to interview employees before verifying tests positive. When it received a correction notice, Y immediately dismissed the erring MRO. In this case, the MRO would be subject to a PIE but Y would not.

Example 7 to § 40.391. The Department issues a PIE with respect to Service Agent Z. Z provides services for DOT-regulated transportation employers, a Federal agency under the HHS-regulated Federal employee testing program, and various private businesses and public agencies that DOT does not regulate. The PIE applies only to the DOT-regulated transportation employers with respect to their DOT-mandated testing, not to the Federal agency or the other public agencies and private businesses. The PIE does not prevent the non-DOT regulated entities from continuing to use Z's services.

§ 40.393 How long does a PIE stay in effect?

(a) In the NOPE (see § 40.375(b)(5)), the initiating official proposes the duration of the PIE. The duration of the PIE is one of the elements of the proceeding that the service agent may contest (see § 40.381(b)) and about which the Director makes a decision (see § 40.387(b)(4)).

(b) In deciding upon the duration of the PIE, the Director considers the seriousness of the conduct on which the PIE is based and the continued need to protect employers and employees from the service agent's noncompliance. The Director considers factors such as those listed in § 40.389 in making this decision.

(c) The duration of a PIE will be between one and five years, unless the Director reduces its duration under § 40.407.

§ 40.395 Can you settle a PIE proceeding?

At any time before the Director's decision, you and the initiating official can, with the Director's concurrence, settle a PIE proceeding.

§ 40.397 When does the Director make a PIE decision?

The Director makes his or her decision within 60 days of the date when the record of a PIE proceeding is complete (including any meeting with the Director and any additional fact-finding that is necessary). The Director may extend this period for good cause for additional periods of up to 30 days.

§ 40.399 How does the Department notify service agents of its decision?

If you are a service agent involved in a PIE proceeding, the Director provides you written notice as soon as he or she makes a PIE decision. The notice includes the following elements:

(a) If the decision is not to issue a PIE, a statement of the reasons for the decision, including findings of fact with respect to any material factual issues that were in dispute.

(b) If the decision is to issue a PIE—

(1) A reference to the NOPE;

(2) A statement of the reasons for the decision, including findings of fact with respect to any material factual issues that were in dispute;

(3) A statement of the scope of the PIE; and

(4) A statement of the duration of the PIE.

§ 40.401 How does the Department notify employers and the public about a PIE?

(a) The Department maintains a document called the ''List of Excluded Drug and Alcohol Service Agents.'' This document may be found on the Department's web site (*http://www.dot.gov/ost/dapc*). You may also request a copy of the document from ODAPC.

(b) When the Director issues a PIE, he or she adds to the List the name and address of the service agent, and any other persons or organizations, to whom the PIE applies and information about the scope and duration of the PIE.

(c) When a service agent ceases to be subject to a PIE, the Director removes this information from the List.

(d) The Department also publishes a FEDERAL REGISTER notice to inform the public on any occasion on which a service agent is added to or taken off the List.

§ 40.403 Must a service agent notify its clients when the Department issues a PIE?

(a) As a service agent, if the Department issues a PIE concerning you, you must notify each of your DOT-regulated employer clients, in writing, about the issuance, scope, duration, and effect of the PIE. You may meet this requirement by sending a copy of the Director's PIE decision or by a separate notice. You must send this notice to each client within three business days of receiving from the Department the notice provided for in § 40.399(b).

(b) As part of the notice you send under paragraph (a) of this section, you must offer to transfer immediately all records pertaining to the employer and its employees to the employer or to any other service agent the employer designates. You must carry out this transfer as soon as the employer requests it.

[65 FR 79526, Dec. 19, 2000, as amended at 66 FR 41955, Aug. 9, 2001]

§ 40.405 May the Federal courts review PIE decisions?

The Director's decision is a final administrative action of the Department. Like all final administrative actions of Federal agencies, the Director's decision is subject to judicial review under the Administrative Procedure Act (5 U.S.C. 551 *et. seq*).

§ 40.407 May a service agent ask to have a PIE reduced or terminated?

(a) Yes, as a service agent concerning whom the Department has issued a PIE, you may request that the Director terminate a PIE or reduce its duration and/or scope. This process is limited to the issues of duration and scope. It is not an appeal or reconsideration of the decision to issue the PIE.

(b) Your request must be in writing and supported with documentation.

(c) You must wait at least nine months from the date on which the Director issued the PIE to make this request.

(d) The initiating official who was the proponent of the PIE may provide information and arguments concerning your request to the Director.

(e) If the Director verifies that the sources of your noncompliance have been eliminated and that all drug or alcohol testing-related services you would provide to DOT-regulated employers will be consistent with the requirements of this part, the Director may issue a notice terminating or reducing the PIE.

§ 40.409 What does the issuance of a PIE mean to transportation employers?

(a) As an employer, you are deemed to have notice of the issuance of a PIE when it appears on the List mentioned in § 40.401(a) or the notice of the PIE appears in the FEDERAL REGISTER as provided in § 40.401(d). You should check this List to ensure that any service agents you are using or planning to use are not subject to a PIE.

(b) As an employer who is using a service agent concerning whom a PIE is issued, you must stop using the services of the service agent no later than 90 days after the Department has published the decision in the FEDERAL REGISTER or posted it on its web site. You may apply to the ODAPC Director for an extension of 30 days if you demonstrate that you cannot find a substitute service agent within 90 days.

(c) Except during the period provided in paragraph (b) of this section, you must not, as an employer, use the services of a service agent that are covered by a PIE that the Director has issued under this subpart. If you do so, you are in violation of the Department's regulations and subject to applicable DOT agency sanctions (*e.g.*, civil penalties, withholding of Federal financial assistance).

(d) You also must not obtain drug or alcohol testing services through a contractor or affiliate of the service agent to whom the PIE applies.

Example to Paragraph (d)*:* Service Agent R was subject to a PIE with respect to SAP services. As an employer, not only must you not use R's own SAP services, but you also must not use SAP services you arrange through R, such as services provided by a subcontractor or affiliate of R or a person or organization that receives financial gain from its relationship with R.

(e) This section's prohibition on using the services of a service agent concerning which the Director has issued a PIE applies to employers in all industries subject to DOT drug and alcohol testing regulations.

Example to Paragraph (e)*:* The initiating official for a PIE was the FAA drug and alcohol program manager, and the conduct forming the basis of the PIE pertained to the aviation industry. As a motor carrier, transit authority, pipeline, railroad, or maritime employer, you are also prohibited from using the services of the service agent involved in connection with the DOT drug and alcohol testing program.

(f) The issuance of a PIE does not result in the cancellation of drug or alcohol tests conducted using the service agent involved before the issuance of the Director's decision or up to 90 days following its publication in the FEDERAL REGISTER or posting on the Department's web site, unless otherwise specified in the Director's PIE decision or the Director grants an extension as provided in paragraph (b) of this section.

Example to Paragraph (f)*:* The Department issues a PIE concerning Service Agent N on September 1. All tests conducted using N's services before September 1, and through November 30, are valid for all purposes under DOT drug and alcohol testing regulations, assuming they meet all other regulatory requirements.

§ 40.411 What is the role of the DOT Inspector General's office?

(a) Any person may bring concerns about waste, fraud, or abuse on the part of a service agent to the attention of the DOT Office of Inspector General.

(b) In appropriate cases, the Office of Inspector General may pursue criminal or civil remedies against a service agent.

(c) The Office of Inspector General may provide factual information to other DOT officials for use in a PIE proceeding.

§ 40.413 How are notices sent to service agents?

(a) If you are a service agent, DOT sends notices to you, including correction notices, notices of proposed exclusion, decision notices, and other notices, in any of the ways mentioned in paragraph (b) or (c) of this section.

(b) DOT may send a notice to you, your identified counsel, your agent for service of process, or any of your partners, officers, directors, owners, or joint venturers to the last known street address, fax number, or e-mail address. DOT deems the notice to have been received by you if sent to any of these persons.

(c) DOT considers notices to be received by you—

(1) When delivered, if DOT mails the notice to the last known street address, or five days after we send it if the letter is undeliverable;

(2) When sent, if DOT sends the notice by fax or five days after we send it if the fax is undeliverable; or

(3) When delivered, if DOT sends the notice by e-mail or five days after DOT sends it if the e-mail is undeliverable.

APPENDIX A TO PART 40—DOT STANDARDS FOR URINE COLLECTION KITS

The Collection Kit Contents

1. *Collection Container*

a. Single-use container, made of plastic, large enough to easily catch and hold at least 55 mL of urine voided from the body.

b. Must have graduated volume markings clearly noting levels of 45 mL and above.

c. Must have a temperature strip providing graduated temperature readings 32–38 °C/90–100 °F, that is affixed or can be affixed at a proper level on the outside of the collection container. Other methodologies (*e.g.*, temperature device built into the wall of the

container) are acceptable provided the temperature measurement is accurate and such that there is no potential for contamination of the specimen.

d. Must be individually wrapped in a sealed plastic bag or shrink wrapping; or must have a peelable, sealed lid or other easily visible tamper-evident system.

e. May be made available separately at collection sites to address shy bladder situations when several voids may be required to complete the testing process.

2. *Plastic Specimen Bottles*

a. Each bottle must be large enough to hold at least 35 mL; or alternatively, they may be two distinct sizes of specimen bottles provided that the bottle designed to hold the primary specimen holds at least 35 mL of urine and the bottle designed to hold the split specimen holds at least 20 mL.

b. Must have screw-on or snap-on caps that prevent seepage of the urine from the bottles during shipment.

c. Must have markings clearly indicating the appropriate levels (30 mL for the primary specimen and 15 mL for the split) of urine that must be poured into the bottles.

d. Must be designed so that the required tamper-evident bottle seals made available on the CCF fit with no damage to the seal when the employee initials it nor with the chance that the seal overlap would conceal printed information.

e. Must be wrapped (with caps) together in a sealed plastic bag or shrink wrapping separate from the collection container; or must be wrapped (with cap) individually in sealed plastic bags or shrink wrapping; or must have peelable, sealed lid or other easily visible tamper-evident system.

f. Plastic material must be leach resistant.

3. *Leak-Resistant Plastic Bag*

a. Must have two sealable compartments or pouches which are leak-resistant; one large enough to hold two specimen bottles and the other large enough to hold the CCF paperwork.

b. The sealing methodology must be such that once the compartments are sealed, any tampering or attempts to open either compartment will be evident.

4. *Absorbent material*

Each kit must contain enough absorbent material to absorb the entire contents of both specimen bottles. Absorbent material must be designed to fit inside the leak-resistant plastic bag pouch into which the specimen bottles are placed.

5. *Shipping Container*

a. Must be designed to adequately protect the specimen bottles from shipment damage in the transport of specimens from the collection site to the laboratory (*e.g.*, standard courier box, small cardboard box, plastic container).

b. May be made available separately at collection sites rather than being part of an actual kit sent to collection sites.

c. A shipping container is not necessary if a laboratory courier hand-delivers the specimen bottles in the plastic leak-proof bags from the collection site to the laboratory.

APPENDIX B TO PART 40—DOT DRUG TESTING SEMI-ANNUAL LABORATORY REPORT TO EMPLOYERS

The following items are required on each report:

Reporting Period: (inclusive dates)
Laboratory Identification: (name and address)
Employer Identification: (name; may include Billing Code or ID code)
C/TPA Identification: (where applicable; name and address)
1. Specimen Results Reported (total number)
By Type of Test
(a) Pre-employment (number)
(b) Post-Accident (number)
(c) Random (number)
(d) Reasonable Suspicion/Cause (number)
(e) Return-to-Duty (number)
(f) Follow-up (number)
(g) Type of Test Not Noted on CCF (number)
2. Specimens Reported
(a) Negative (number)
(b) Negative and Dilute (number)
3. Specimens Reported as Rejected for Testing (total number)
By Reason
(a) Fatal flaw (number)
(b) Uncorrected Flaw (number)
4. Specimens Reported as Positive (total number) By Drug
(a) Marijuana Metabolite (number)
(b) Cocaine Metabolite (number)
(c) Opiates (number)
(1) Codeine (number)
(2) Morphine (number)
(3) 6-AM (number)
(d) Phencyclidine (number)
(e) Amphetamines (number)
(1) Amphetamine (number)
(2) Methamphetamine (number)
5. Adulterated (number)
6. Substituted (number)
7. Invalid Result (number)

[73 FR 35975, June 25, 2008]

APPENDIX C TO PART 40—DOT DRUG TESTING SEMI-ANNUAL LABORATORY REPORT TO DOT

Mail, fax, or e-mail to: U.S. Department of Transportation, Office of Drug and Alcohol Policy and Compliance, W62–300, 1200 New Jersey Avenue, SE., Washington, DC 20590, Fax: (202) 366–3897, E-mail: *ODAPCWebMail@dot.gov*.

The following items are required on each report:

Reporting Period: (inclusive dates)
Laboratory Identification: (name and address)
1. DOT Specimen Results Reported (number)
2. Negative Results Reported (number)
3. Rejected for Testing Reported (number) By Reason (number)
4. Positive Results Reported (number) By Drug (number)
5. Adulterated Results Reported (number) By Reason (number)
6. Substituted Results Reported (number)
7. Invalid Results Reported (number) By Reason (number)

[73 FR 35975, June 25, 2008]

APPENDIX D TO PART 40—REPORT FORMAT: SPLIT SPECIMEN FAILURE TO RECONFIRM

Mail, fax, or submit electronically to: U.S. Department of Transportation, Office of Drug and Alcohol Policy and Compliance, W62–300, 1200 New Jersey Avenue, SE., Washington, DC 20590, Fax: (202) 366–3897, Submit Electronically: *http://www.dot.gov/ost/dapc/mro_split.html*.

The following items are required on each report:

1. MRO name, address, phone number, and fax number.
2. Collection site name, address, and phone number.
3. Date of collection.
4. Specimen I.D. number.
5. Laboratory accession number.
6. Primary specimen laboratory name, address, and phone number.
7. Date result reported or certified by primary laboratory.
8. Split specimen laboratory name, address, and phone number.
9. Date split specimen result reported or certified by split specimen laboratory.
10. Primary specimen results (e.g., name of drug, adulterant) in the primary specimen.
11. Reason for split specimen failure-to-reconfirm result (e.g., drug or adulterant not present, specimen invalid, split not collected, insufficient volume).
12. Actions taken by the MRO (e.g., notified employer of failure to reconfirm and requirement for recollection).
13. Additional information explaining the reason for cancellation.
14. Name of individual submitting the report (if not the MRO).

[73 FR 35975, June 25, 2008]

APPENDIX E TO PART 40—SAP EQUIVALENCY REQUIREMENTS FOR CERTIFICATION ORGANIZATIONS

1. *Experience:* Minimum requirements are for three years of full-time supervised experience or 6,000 hours of supervised experience as an alcoholism and/or drug abuse counselor. The supervision must be provided by a licensed or certified practitioner. Supervised experience is important if the individual is to be considered a professional in the field of alcohol and drug abuse evaluation and counseling.

2. *Education:* There exists a requirement of 270 contact hours of education and training in alcoholism and/or drug abuse or related training. These hours can take the form of formal education, in-service training, and professional development courses. Part of any professional counselor's development is participation in formal and non-formal education opportunities within the field.

3. *Continuing Education:* The certified counselor must receive at least 40–60 hours of continuing education units (CEU) during each two year period. These CEUs are important to the counselor's keeping abreast of changes and improvements in the field.

4. *Testing:* A passing score on a national test is a requirement. The test must accurately measure the application of the knowledge, skills, and abilities possessed by the counselor. The test establishes a national standard that must be met to practice.

5. *Testing Validity:* The certification examination must be reviewed by an independent authority for validity (examination reliability and relationship to the knowledge, skills, and abilities required by the counseling field). The reliability of the exam is paramount if counselor attributes are to be accurately measured. The examination passing score point must be placed at an appropriate minimal level score as gauged by statistically reliable methodology.

6. *Measurable Knowledge Base:* The certification process must be based upon measurable knowledge possessed by the applicant and verified through collateral data and testing. That level of knowledge must be of sufficient quantity to ensure a high quality of SAP evaluation and referral services.

7. *Measurable Skills Base:* The certification process must be based upon measurable skills possessed by the applicant and verified through collateral data and testing. That level of skills must be of sufficient quality to ensure a high quality of SAP evaluation and referral services.

8. *Quality Assurance Plan:* The certification agency must ensure that a means exists to determine that applicant records are verified as being true by the certification staff. This is an important check to ensure that true information is being accepted by the certifying agency.

9. *Code of Ethics:* Certified counselors must pledge to adhere to an ethical standard for practice. It must be understood that code violations could result in de-certification. These standards are vital in maintaining the integrity of practitioners. High ethical standards are required to ensure quality of

client care and confidentiality of client information as well as to guard against inappropriate referral practices.

10. *Re-certification Program:* Certification is not just a one-time event. It is a continuing privilege with continuing requirements. Among these are continuing education, continuing state certification, and concomitant adherence to the code of ethics. Re-certification serves as a protector of client interests by removing poor performers from the certified practice.

11. *Fifty State Coverage:* Certification must be available to qualified counselors in all 50 states and, therefore, the test must be available to qualified applicants in all 50 states. Because many companies are multi-state operators, consistency in SAP evaluation quality and opportunities is paramount. The test need not be given in all 50 states but should be accessible to candidates from all states.

12. *National Commission for Certifying Agencies (NCCA) Accreditation:* Having NCCA accreditation is a means of demonstrating to the Department of Transportation that your certification has been reviewed by a panel of impartial experts that have determined that your examination(s) has met stringent and appropriate testing standards.

APPENDIX F TO PART 40—DRUG AND ALCOHOL TESTING INFORMATION THAT C/TPAS MAY TRANSMIT TO EMPLOYERS

1. If you are a C/TPA, you may, acting as an intermediary, transmit the information in the following sections of this part to the DER for an employer, if the employer chooses to have you do so. These are the only items that you are permitted to transmit to the employer as an intermediary. The use of C/TPA intermediaries is prohibited in all other cases, such as transmission of laboratory drug test results to MROs, the transmission of medical information from MROs to employers, the transmission of SAP reports to employers, the transmission of positive alcohol test results, and the transmission of medical information from MROs to employers.

2. In every case, you must ensure that, in transmitting the information, you meet all requirements (*e.g.,* concerning confidentiality and timing) that would apply if the party originating the information (*e.g.,* an MRO or collector) sent the information directly to the employer. For example, if you transmit MROs' drug testing results to DERs, you must transmit each drug test result to the DER in compliance with the requirements for MROs set forth in §40.167.

DRUG TESTING INFORMATION

§40.25: Previous two years' test results
§40.35: Notice to collectors of contact information for DER
§40.61(a): Notification to DER that an employee is a ''no show'' for a drug test
§40.63(e): Notification to DER of a collection under direct observation
§40.65(b)(6) and (7) and (c)(2) and (3): Notification to DER of a refusal to provide a specimen or an insufficient specimen
§40.73(a)(9): Transmission of CCF copies to DER (However, MRO copy of CCF must be sent by collector directly to the MRO, not through the C/TPA.)
§40.111(a): Transmission of laboratory statistical report to employer
§40.127(f): Report of test results to DER
§§40.127(g), 40.129(d), 40.159(a)(4)(ii); 40.161(b): Reports to DER that test is cancelled
§40.129 (d): Report of test results to DER
§40.129(g)(1): Report to DER of confirmed positive test in stand-down situation
§§40.149(b): Report to DER of changed test result
§40.155(a): Report to DER of dilute specimen
§40.167(b) and (c): Reports of test results to DER
§40.187(a)–(e) Reports to DER concerning the reconfirmation of tests
§40.191(d): Notice to DER concerning refusals to test
§40.193(b)(3): Notification to DER of refusal in shy bladder situation
§40.193(b)(4): Notification to DER of insufficient specimen
§40.193(b)(5): Transmission of CCF copies to DER (not to MRO)
§40.199: Report to DER of cancelled test and direction to DER for additional collection
§40.201: Report to DER of cancelled test

ALCOHOL TESTING INFORMATION

§40.215: Notice to BATs and STTs of contact information for DER
§40.241(b)(1): Notification to DER that an employee is a ''no show'' for an alcohol test
§40.247(a)(2): Transmission of alcohol screening test results only when the test result is less than 0.02
§40.255(a)(4): Transmission of alcohol confirmation test results only when the test result is less than 0.02
§40.263(a)(3) and 263(b)(3): Notification of insufficient saliva and failure to provide sufficient amount of breath

[65 FR 79526, Dec. 19, 2000, as amended at 66 FR 41955, Aug. 9, 2001; 73 FR 35975, June 25, 2008]

APPENDIX G TO PART 40—ALCOHOL TESTING FORM

The following form is the alcohol testing form required for use in the DOT alcohol testing program beginning August 1, 2001. Use of the form is authorized beginning January 18, 2001.

U.S. Department of Transportation (DOT)
Alcohol Testing Form

(The instructions for completing this form are on the back of Copy 3)

Step 1: TO BE COMPLETED BY ALCOHOL TECHNICIAN

A: Employee Name _____
(Print) (First, M.I., Last)

B: SSN or Employee ID No. _____

C: Employer Name _____
Street
City, ST ZIP _____

_____

DER Name and Telephone No.
_____ (____)_____
DER Name **DER Phone Number**

D: Reason for Test: ☐**Random** ☐**Reasonable Susp** ☐**Post-Accident** ☐**Return to Duty** ☐**Follow-up** ☐**Pre-employment**

STEP 2: TO BE COMPLETED BY EMPLOYEE

I certify that I am about to submit to alcohol testing required by US Department of Transportation regulations and that the identifying information provided on the form is true and correct.

_____ _____/____/____
Signature of Employee **Date Month Day Year**

STEP 3: TO BE COMPLETED BY ALCOHOL TECHNICIAN

(If the technician conducting the screening test is not the same technician who will be conducting the confirmation test, each technician must complete their own form.) I certify that I have conducted alcohol testing on the above named individual in accordance with the procedures established in the US Department of Transportation regulation, 49 CFR Part 40, that I am qualified to operate the testing device(s) identified, and that the results are as recorded.

TECHNICIAN: ☐**BAT** ☐ **STT** **DEVICE:** ☐ **SALIVA** ☐**BREATH*** **15-Minute Wait:** ☐ **Yes** ☐ **No**

SCREENING TEST: *(For BREATH DEVICE* write in the space below only if the testing device is not designed to print.)*

Test #	Testing Device Name	Device Serial # OR Lot # & Exp Date	Activation Time	Reading Time	Result

CONFIRMATION TEST: *Results MUST be affixed to each copy of this form or printed directly onto the form.*

REMARKS:

_____
_____
_____

_____ _____
Alcohol Technician's Company **Company Street Address**

_____ _____ (____)_____
(PRINT) Alcohol Technician's Name (First, M.I., Last) **Company City, State, Zip** **Phone Number**

_____ _____/____/_____
Signature of Alcohol Technician **Date Month Day Year**

STEP 4: TO BE COMPLETED BY EMPLOYEE IF TEST RESULT IS 0.02 OR HIGHER

I certify that I have submitted to the alcohol test, the results of which are accurately recorded on this form. I understand that I must not drive, perform safety-sensitive duties, or operate heavy equipment because the results are 0.02 or greater.

_____ _____/____/____
Signature of Employee **Date Month Day Year**

COPY 1 – ORIGINAL – FORWARD TO THE EMPLOYER

Affix Or Print Screening Results *Here*

Affix With Tamper Evident Tap

Affix Or Print Confirmation Result *Here*

Affix With Tamper Evident Tape

Affix Or Print Additional Results Here

Affix With Tamper Evident Tape

U.S. Department of Transportation (DOT)
Alcohol Testing Form

(The instructions for completing this form are on the back of Copy 3)

Step 1: TO BE COMPLETED BY ALCOHOL TECHNICIAN

A: Employee Name _____
(Print) (First, M.I., Last)

B: SSN or Employee ID No. _____

C: Employer Name _____
Street
City, ST ZIP _____

_____

DER Name and Telephone No. _____(____)_____
DER Name **DER Phone Number**

D: Reason for Test: ☐Random ☐Reasonable Susp ☐Post-Accident ☐Return to Duty ☐Follow-up ☐Pre-employment

Affix Or Print Screening Results Here

Affix With Tamper Evident Tap

STEP 2: TO BE COMPLETED BY EMPLOYEE

I certify that I am about to submit to alcohol testing required by US Department of Transportation regulations and that the identifying information provided on the form is true and correct.

_____ ____/___/____
Signature of Employee **Date Month Day Year**

Affix Or Print Confirmation Result Here

Affix With Tamper Evident Tape

STEP 3: TO BE COMPLETED BY ALCOHOL TECHNICIAN

(If the technician conducting the screening test is not the same technician who will be conducting the confirmation test, each technician must complete their own form.) I certify that I have conducted alcohol testing on the above named individual in accordance with the procedures established in the US Department of Transportation regulation, 49 CFR Part 40, that I am qualified to operate the testing device(s) identified, and that the results are as recorded.

TECHNICIAN: ☐BAT ☐STT DEVICE: ☐SALIVA ☐BREATH* 15-Minute Wait: ☐Yes ☐No

SCREENING TEST: *(For BREATH DEVICE* write in the space below only if the testing device is not designed to print.)*

Test #	Testing Device Name	Device Serial # OR Lot # & Exp Date	Activation Time	Reading Time	Result

CONFIRMATION TEST: *Results MUST be affixed to each copy of this form or printed directly onto the form.*

REMARKS:

_____

_____

_____

_____ _____
Alcohol Technician's Company **Company Street Address**

_____ _____(____)_____
(PRINT) Alcohol Technician's Name (First, M.I., Last) **Company City, State, Zip** **Phone Number**

_____ _____/___/_____
Signature of Alcohol Technician **Date Month Day Year**

Affix Or Print Additional Results Here

Affix With Tamper Evident Tape

STEP 4: TO BE COMPLETED BY EMPLOYEE IF TEST RESULT IS 0.02 OR HIGHER

I certify that I have submitted to the alcohol test, the results of which are accurately recorded on this form. I understand that I must not drive, perform safety-sensitive duties, or operate heavy equipment because the results are 0.02 or greater.

_____ ____/___/____
Signature of Employee **Date Month Day Year**

COPY 2 – EMPLOYEE RETAINS

U.S. Department of Transportation (DOT)
Alcohol Testing Form

(The instructions for completing this form are on the back of Copy 3)

Step 1: TO BE COMPLETED BY ALCOHOL TECHNICIAN

A: Employee Name _____
(Print) (First, M.I., Last)

B: SSN or Employee ID No. _____

C: Employer Name _____
Street
City, ST ZIP _____

_____

DER Name and Telephone No. _____ (____)_____
DER Name **DER Phone Number**

D: Reason for Test: ☐**Random** ☐**Reasonable Susp** ☐**Post-Accident** ☐**Return to Duty** ☐**Follow-up** ☐**Pre-employment**

Affix Or Print Screening Results Here

Affix With Tamper Evident Tap

STEP 2: TO BE COMPLETED BY EMPLOYEE

I certify that I am about to submit to alcohol testing required by US Department of Transportation regulations and that the identifying information provided on the form is true and correct.

_____ ____/____/____
Signature of Employee **Date Month Day Year**

Affix Or Print Confirmation Results Here

Affix With Tamper Evident Tape

STEP 3: TO BE COMPLETED BY ALCOHOL TECHNICIAN

(If the technician conducting the screening test is not the same technician who will be conducting the confirmation test, each technician must complete their own form.) I certify that I have conducted alcohol testing on the above named individual in accordance with the procedures established in the US Department of Transportation regulation, 49 CFR Part 40, that I am qualified to operate the testing device(s) identified, and that the results are as recorded.

TECHNICIAN: ☐**BAT** ☐ **STT** **DEVICE:** ☐ **SALIVA** ☐**BREATH*** **15-Minute Wait:** ☐ **Yes** ☐ **No**

SCREENING TEST: *(For BREATH DEVICE* write in the space below only if the testing device is not designed to print.)*

Test #	Testing Device Name	Device Serial # *OR* Lot # & Exp Date	Activation Time	Reading Time	Result

CONFIRMATION TEST: *Results MUST be affixed to each copy of this form or printed directly onto the form.*

REMARKS:

_____
_____
_____

_____ _____
Alcohol Technician's Company **Company Street Address**

_____ _____ (____)_____
(PRINT) Alcohol Technician's Name (First, M.I., Last) **Company City, State, Zip** **Phone Number**

_____ _____/____/_____
Signature of Alcohol Technician **Date Month Day Year**

Affix Or Print Additional Results Here

Affix With Tamper Evident Tape

STEP 4: TO BE COMPLETED BY EMPLOYEE IF TEST RESULT IS 0.02 OR HIGHER

I certify that I have submitted to the alcohol test, the results of which are accurately recorded on this form. I understand that I must not drive, perform safety-sensitive duties, or operate heavy equipment because the results are 0.02 or greater.

_____ ____/____/____
Signature of Employee **Date Month Day Year**

COPY 3 – ALCOHOL TECHNICIAN RETAINS

PAPERWORK REDUCTION ACT NOTICE (as required by 5 CFR 1320.21)

Public reporting burden for this collection of information is estimated for each respondent to average: 1 minute/employee, 4 minutes/Breath Alcohol Technician. Individuals may send comments regarding these burden estimates, or any other aspect of this collection of information, including suggestions for reducing the burden, to U.S. Department of Transportation, Drug and alcohol Policy and Compliance, Room 10403, 400 Seventh St., SW, Washington, D.C. 20590 or Office of Management and Budget, Paperwork Reduction Project, Room 3001, 725 Seventeenth St., NW, Washington, D.C. 20503.

BACK OF PAGES 1 and 2

INSTRUCTIONS FOR COMPLETING THE U.S. DEPARTMENT OF TRANSPORTATION ALCOHOL TESTING FORM

NOTE: Use a ballpoint pen, press hard, and check all copies for legibility.

STEP 1 The Breath Alcohol Technician (BAT) or Screening Test Technician (STT) completes the information required in this step. Be sure to print the employee's name and check the box identifying the reason for the test.

NOTE: If the employee refuses to provide SSN or I.D. number, be sure to indicate this in the remarks section in STEP 3. Proceed with STEP 2.

STEP 2 Instruct the employee to read, sign, and date the employee certification statement in STEP 2.

NOTE: If the employee refuses to sign the certification statement, do not proceed with the alcohol test. Contact the designated employer representative.

STEP 3 The BAT or STT completes the information required in this step and checks the type of device (saliva or breath) being used. After conducting the alcohol screening test, do the following (as appropriate):

Enter the information for the screening test (test number, testing device name, testing device serial number or lot number and expiration date, time of test with any device-dependent activation times, and the results), on the front of the AFT. For a breath testing device capable of printing, the information may be part of the printed record.

NOTE: Be sure to enter the result of the test exactly as it is indicated on the breath testing device, e.g., 0.00, 0.02, 0.04, etc.

Affix the printed information in the space provided, in a tamper-evident manner (e.g., tape), or the device may print the results directly on the ATF. If the results of the screening test are less than 0.02, print, sign your name, and enter today's date in the space provided. The test process is complete.

If the results of the screening test are 0.02 or greater, a confirmation test must be administered in accordance with DOT regulations. An EVIDENTIAL BREATH TESTING device that is capable of printing confirmation test information must be used in conducting this test.

After conducting the alcohol confirmation test, affix the printed information in the space provided, in a tamper-evident manner (e.g., tape), or the device may print the results directly on the ATF. Print, sign your name, and enter the date in the space provided. Go to STEP 4.

STEP 4 If the employee has a breath alcohol confirmation test result of 0.02 or higher, instruct the employee to read, sign, and date the employee certification statement in STEP 4.

NOTE: If the employee refuses to sign the certification statement in STEP 4, be sure to indicate this in the remarks line in STEP 3.

Immediately notify the DER if the employee has a breath alcohol confirmation test result of 0.02 or higher.

Forward **Copy 1** to the employer. Give **Copy 2** to the employee. Retain **Copy 3** for BAT/STT records.

BACK OF PAGE 3

APPENDIX H TO PART 40—DOT DRUG AND ALCOHOL TESTING MANAGEMENT INFORMATION SYSTEM (MIS) DATA COLLECTION FORM

The following form and instructions must be used when an employer is required to report MIS data to a DOT agency.

U.S. DEPARTMENT OF TRANSPORTATION DRUG AND ALCOHOL TESTING MIS DATA COLLECTION FORM

Calendar Year Covered by this Report: _____

I. Employer:

Company Name: _____

Doing Business As (DBA) Name (if applicable): _____

Address: _____ E-mail: _____

Name of Certifying Official: _____ Signature: _____

Telephone: (_____)_____ Date Certified: _____

Prepared by (if different): _____ Telephone: (_____)_____

C/TPA Name and Telephone (if applicable): _____ (_____)_____

Check the DOT agency for which you are reporting MIS data; and complete the information on that same line as appropriate:

___ FMSCA – Motor Carrier: DOT #: _____ Owner-operator: (circle one) YES or NO Exempt (Circle One) YES or NO

___ FAA – Aviation: Certificate # (if applicable): _____ Plan / Registration # (if applicable): _____

___ RSPA – Pipeline: (Check) Gas Gathering__ Gas Transmission__ Gas Distribution__ Transport Hazardous Liquids__ Transport Carbon Dioxide__

___ FRA – Railroad: Total Number of observed/documented Part 219 "Rule G" Observations for covered employees: _____

___ USCG – Maritime: Vessel ID # (USCG- or State-Issued): _____ (If more than one vessel, list separately.)

___ FTA – Transit

II. Covered Employees: (A) Enter Total Number Safety-Sensitive Employees In All Employee Categories: _____

(B) Enter Total Number of Employee Categories: _____

(C)

Employee Category	Total Number of Employees in this Category

If you have multiple employee categories, complete Sections I and II (A) & (B). Take that filled-in form and make one copy for each employee category and complete Sections II (C), III, and IV for each separate employee category.

III. Drug Testing Data:

	1	2	3	4	5	6	7	8	9	10	11	12	13
									Refusal Results				
Type of Test	Total Number Of Test Results [Should equal the sum of Columns 2, 3, 9, 10, 11, and 12]	Verified Negative Results	Verified Positive Results – For One Or More Drugs	Positive For Marijuana	Positive For Cocaine	Positive For PCP	Positive For Opiates	Positive For Amphetamines	Adulterated	Substituted	"Shy Bladder" – With No Medical Explanation	Other Refusals To Submit To Testing	Cancelled Results
Pre-Employment													
Random													
Post-Accident													
Reasonable Susp./Cause													
Return-to-Duty													
Follow-Up													
TOTAL													

IV. Alcohol Testing Data:

	1	2	3	4	5	6	7	8	9
							Refusal Results		
Type of Test	Total Number Of Screening Test Results [Should equal the sum of Columns 2, 3, 7, and 8]	Screening Tests With Results Below 0.02	Screening Tests With Results 0.02 Or Greater	Number Of Confirmation Tests Results	Confirmation Tests With Results 0.02 Through 0.039	Confirmation Tests With Results 0.04 Or Greater	"Shy Lung" – With No Medical Explanation	Other Refusals To Submit To Testing	Cancelled Results
Pre-Employment									
Random									
Post-Accident									
Reasonable Susp./Cause									
Return-to-Duty									
Follow-Up									
TOTAL									

PAPERWORK REDUCTION ACT NOTICE (as required by 5 CFR 1320.21)
According to the Paperwork Reduction Act of 1995, no persons are required to respond to a collection of information unless it displays a valid OMB control number. The valid OMB control number for this information collection is 2105-0529. The Department of Transportation estimates that the average burden for this report form is 1.5 hours. You may send comments regarding this burden estimate or any suggestions for reducing the burden to: U.S. Department of Transportation, Office of Drug and Alcohol Policy and Compliance, Room 10403, 400 Seventh Street, SW, Washington, D.C. 20590; OR Office of Management and Budget, Paperwork Reduction Project, 725 Seventeenth Street, NW, Washington, D.C. 20503.

Title 18, USC Section 1001, makes it a criminal offense subject to a maximum fine of $10,000, or imprisonment for not more than 5 years, or both, to knowingly and willfully make or cause to be made any false or fraudulent statements of representations in any matter within the jurisdiction of any agency of the United States.

U.S. DEPARTMENT OF TRANSPORTATION
DRUG AND ALCOHOL TESTING MIS DATA COLLECTION FORM
INSTRUCTION SHEET

This Management Information System (MIS) form is made-up of four sections: employer information; covered employees (i.e., employees performing DOT regulated safety-sensitive duties) information; drug testing data; and alcohol testing data. The employer information needs only to be provided once per submission. However, you must submit a separate page of data for each employee category for which you report testing data. If you are preparing reports for more than one DOT agency then you must submit DOT agency-specific forms.

Please type or print entries legibly in black ink.

TIP *~ Read the entire instructions before starting. Please note that USCG-regulated employers do not report alcohol test results on the MIS form.*

Calendar Year Covered by this Report: Enter the appropriate year.

Section I. Employer

1. Enter your company's name, to include when applicable, your "doing business as" name; current address, city, state, and zip code; and an e-mail address, if available.
2. Enter the printed name, signature, and complete telephone number of the company official certifying the accuracy of the report and the date that person certified the report as complete.
3. If someone other than the certifying official completed the MIS form, enter that person's name and phone number on the appropriate lines provided.
4. If a Consortium/Third Party Administrator (C/TPA) performs administrative services for your drug and alcohol program operation, enter its name and phone number on the appropriate lines provided.
5. DOT Agency Information: Check the box next to the DOT agency for which you are completing this MIS form. Again, if you are submitting to multiple DOT agencies, you must use separate forms for each DOT agency.
a. If you are completing the form for FMCSA, enter your FMCSA DOT Number, as appropriate. In addition, you must indicate whether you are an owner-operator (i.e., an employer who employs only himself or herself as a driver) and whether you are exempt from providing MIS data. Exemptions are noted in the FMCSA regulation at 382.103(d).
b. If you are completing the form for FAA, enter your FAA Certificate Number and FAA Antidrug Plan / Registration Number, when applicable.
c. If you are completing the form for RSPA, check the additional box(s) indicating your type of operation.
d. If you are completing the form for FRA, enter the number of observed/documented Part 219 "Rule G" Observations for covered employees.
e. If you are submitting the form for USCG, enter the vessel ID number. If there is more than one number, enter the numbers separately.

Section II. Covered Employees

1. In Box II-A, enter the total number of covered employees (i.e., employees performing DOT regulated safety-sensitive duties) who work for your company. Then enter, in Box II-B, the total number of employee categories that number represents. If you have employees, some of whom perform duties under one DOT agency and others of whom perform duties under another DOT agency, enter only the number of those employees performing duties under the DOT agency for whom you are submitting the form. If you have covered employees who perform multi-DOT agency functions (e.g., an employee drives a commercial motor vehicle and performs pipeline maintenance duties for you), count the employee only on the MIS report for the DOT agency regulating more than 50 percent of the employee's safety sensitive function.

[Example: If you are submitting the information for the FRA and you have 2000 covered employees performing duties in all FRA-covered service categories – you would enter "2000" in the first box (II-A) and "5" in the second box (II-B), because FRA has five safety-sensitive employee categories and you have employees in all of these groups. If you have 1000 employees performing safety-sensitive duties in three FRA-covered service categories (e.g., engine service, train service, and dispatcher/operation), you would enter "1000" in the first box (II-A) and "3" in the second box (II-B).]

TIP *~ To calculate the total number of covered employees, add the total number of covered employees eligible for testing during each random testing selection period for the year and divide that total by the number of random testing periods. (However, no company will need to factor the average number of employees more often than once per month). For instance, a company conducting random testing quarterly needs to add the total of covered employees they had in the random pool when each selection was made; then divide this number by 4 to obtain the yearly average number of covered employees. It is extremely important that you place all eligible employees into these random pools. [As an example, if Company A had 1500 employees in the first quarter random pool, 2250 in the second quarter, 2750 in the third quarter; and 1500 in the fourth quarter; 1500 + 2250 + 2750 + 1500 = 8000; 8000 / 4 = 2000; the total number of covered employees for the year would be reported as, "2000".*

If you conduct random selections more often than once per month (e.g., you select daily, weekly, bi-weekly), you do not need to compute this total number of covered employees rate more than on a once per month basis. Therefore, employers need not compute the covered employees rate more than 12 times per year.]

2. If you are reporting multiple employee categories, enter the specific employee category in box II-C; and provide the number of employees performing safety-sensitive duties in that specific category.

[Example: You are submitting data to the FTA and you have 2000 covered employees. You have 1750 personnel performing revenue vehicle operation and the remaining 250 are performing revenue vehicle and equipment maintenance. When you provide vehicle operation information, you would enter "Revenue Vehicle Operation" in the first II-C box and "1750" in the second II-C box. When you provide data on the maintenance personnel, you would enter "Revenue Vehicle and Equipment Maintenance" in the first II-C box and "250" in the second II-C box.]

TIP *~ A separate form for each employee category must be submitted. You may do this by filling out a single MIS form through Section II-B and then make one copy for each additional employee category you are reporting. [For instance, if you are submitting the MIS form for the FMCSA, you need only submit one form for all FMCSA covered employees working for you – your only category of employees is "driver." If you are reporting testing data to the FAA and you employ only flight crewmembers, flight attendants, and aircraft maintenance workers, you need to complete one form each for category – three forms in all. If you are reporting to FAA and have all FAA categories of covered employees, you must submit eight forms.]*

Here is a full listing of covered-employee categories:

FMCSA *(one category): Driver*
FAA *(eight categories): Flight Crewmember; Flight Attendant; Flight Instructor; Aircraft Dispatcher; Aircraft Maintenance; Ground Security Coordinator; Aviation Screener; Air Traffic Controller*
RSPA *(one category): Operation/Maintenance/Emergency Response*
FRA *(five categories): Engine Service; Train Service; Dispatcher/Operation; Signal Service; Other [Includes yardmasters, hostlers (non-engineer craft), bridge tenders; switch tenders, and other miscellaneous employees performing 49 CFR 228.5 (c) defined covered service.]*
USCG *(one category): Crewmember*
FTA *(five categories): Revenue Vehicle Operation; Revenue Vehicle and Equipment Maintenance; Revenue Vehicle Control/Dispatch; CDL/Non-Revenue Vehicle; Armed Security Personnel*

Section III. Drug Testing Data

This section summarizes the drug testing results for all covered employees (to include applicants). The table in this section requires drug test data by test type and by result. The categories of test types are: Pre-Employment; Random; Post-Accident; Reasonable Suspicion / Reasonable Cause; Return-to-Duty, and Follow-Up.

The categories of type of results are: Total Number of Test Results [excluding cancelled tests and blind specimens]; Verified Negative; Verified Positive; Positive for Marijuana; Positive for Cocaine; Positive for PCP; Positive for Opiates; Positive for Amphetamines; Refusals due to Adulterated, Substituted, "Shy Bladder" with No Medical Explanation, and Other Refusals to Submit to Testing; and Cancelled Results.

TIP *~ Do not enter data on blind specimens submitted to laboratories. Be sure to enter all pre-employment testing data regardless of whether an applicant was hired or not. You do not need to separate reasonable suspicion and reasonable cause drug testing data on the MIS form. [Therefore, if you conducted only reasonable suspicion drug testing (i.e., FMCSA and FTA), enter that data; if you conducted only reasonable cause drug testing (i.e., FAA, RSPA, and USCG); or if you conducted both under FRA drug testing rules, simply enter the data with no differentiation.] For USCG, enter any "Serious Marine Incident" testing in the Post-Accident row. For FRA, do not enter post accident data (the FRA does not collect this data on the MIS form). Finally, you may leave blank any row or column in which there were no results, or you may enter "0" (zero) instead. Please note that cancelled tests are not included in the "total number of test results" column.*

Section III, Column 1. Total Number of Test Results ~ This column requires a count of the total number of test results in each testing category during the entire reporting year. Count the number of test results as the number of testing events resulting in negative, positive, and refusal results. Do not count cancelled tests and blind specimens in this total.

[Example: A company that conducted fifty pre-employment tests would enter "50" on the Pre-Employment row. If it conducted one hundred random tests, "100' would be entered on the Random row. If that company did no post-accident, reasonable suspicion, reasonable cause, return-to-duty, or follow-up tests, those categories will be left blank or zeros entered.]

Section III, Column 2. Verified Negative Results ~ This column requires a count of the number of tests in each testing category that the Medical Review Officer (MRO) reported as negative. Do not count a negative-dilute result if, subsequently, the employee underwent a second collection; the second test is the test of record.

[Example: If forty-seven of the company's fifty pre-employment tests were reported negative, "47" would be entered in Column 2 on the Pre-Employment row. If ninety of the company's one hundred random test results were reported negative, "90" would be entered in Column 2 on the Random row. Because the company did no other testing, those other categories would be left blank or zeros entered.]

Section III, Column 3. Verified Positive Results ~ For One Or More Drugs ~ This column requires a count of the number of tests in each testing category that the MRO reported as positive for one or more drugs. When the MRO reports a test positive for two drugs, it would count as one positive test.

[Example: If one of the fifty pre-employment tests was positive for two drugs, "1" would be entered in Column 3 on the Pre-Employment row. If four of the company's one hundred random test results were reported positive (three for one drug and one for two drugs), "4" would be entered in Column 3 on the Random row.]

■ **Section III, Columns 4 through 8. Positive** (for specific drugs) ~ These columns require entry of the by-drug data for which specimens were reported positive by the MRO.

[Example: The pre-employment positive test reported by the MRO was positive for marijuana, "1" would be entered in Column 4 on the Pre-Employment row. If three of the four positive results for random testing were reported by the MRO to be positive for marijuana, "3" would be entered in Column 4 on the Random row. If one of the four positive results for random testing was reported positive for both PCP and opiates, "1" would be entered in Column 6 on the Random row and "1" would be entered in Column 7 of the Random row.]

TIP *~ Column 1 should equal the sum of Columns 2, 3, 9, 10, 11, and 12. Remember you have not counted specimen results that were ultimately cancelled or were from blind specimens. So, Column 1 = Column 2 + Column 3 + Column 9 + Column 10 + Column 11 + Column 12. Certainly, double check your records to determine if your actual results count is reflective of all negative, positive, and refusal counts.*

An MRO may report that a specimen is positive for more than one drug. When that happens, to use the company example above (i.e., one random test was positive for both PCP and opiates), the positive results should be recorded in the appropriate columns – PCP and opiates in this case. There is no expectation for Columns 4 through 8 numbers to add up to the numbers in Column 3 when you report multiple positives.

Section III, Columns 9 through 12. Refusal Results ~ The refusal section is divided into four refusal groups – they are: Adulterated; Substituted; "Shy Bladder" ~ With No Medical Explanation; and Other Refusals To Submit to Testing. The MRO reports two of these refusal types – adulterated and substituted specimen results – because of laboratory test findings.

When an individual does not provide enough urine at the collection site, the MRO conducts or causes to have conducted a medical evaluation to determine if there exists a medical reason for the person's inability to provide the appropriate amount of urine. If there is no medical reason to support the inability, the MRO reports the result to the employer as a refusal to test: Refusals of this type are reported in the "Shy Bladder" ~ With No Medical Explanation category.

Finally, additional reasons exist for a test to be considered a refusal. Some examples are: the employee fails to report to the collection site as directed by the employer; the employee leaves the collection site without permission; the employee fails to empty his or her pockets at the collection site; the employee refuses to have a required shy bladder evaluation. Again, these are only four examples: there are more.

■ **Section III, Column 9. Adulterated** ~ This column requires the count of the number of tests reported by the MRO as refusals because the specimens were adulterated.

[Example: If one of the fifty pre-employment tests was adulterated, "1" would be entered in Column 9 of the Pre-Employment row.]

■ **Section III, Column 10. Substituted** ~ This column requires the count of the number of tests reported by the MRO as refusals because the specimens were substituted.

[Example: If one of the 100 random tests was substituted, "1" would be entered in Column 10 of the Random row.]

■ **Section III, Column 11. "Shy Bladder" ~ With No Medical Explanation** ~ This column requires the count of the number of tests reported by the MRO as being a refusal because there was no legitimate medical reason for an insufficient amount of urine.

[Example: If one of the 100 random tests was a refusal because of shy bladder, "1" would be entered in Column 11 of the Random row.]

■ **Section III, Column 12. Other Refusals To Submit To Testing** ~ This column requires the count of refusals other than those already entered in Columns 9 through 11.

[Example: If the company entered "100" as the number of random specimens collected, however it had five employees who refused to be tested without submitting specimens: two did not show up at the collection site as directed; one refused to empty his pockets at the collection site; and two left the collection site rather than submit to a required directly observed collection. Because of these five refusal events, "5" would be entered in Column 11 of the Random row.]

TIP ~ *Even though some testing events result in a refusal in which no urine was collected and sent to the laboratory, a "refusal" is still a final test result. Therefore, your overall numbers for test results (in Column 1) will equal the total number of negative tests (Column 2); positives (Column 3); and refusals (Columns 9, 10, 11, and 12). Do not worry that no urine was processed at the laboratory for some refusals; all refusals are counted as a testing event for MIS purposes and for establishing random rates.*

Section III, Column 13. Cancelled Tests ~ This column requires a count of the number of tests in each testing category that the MRO reported as cancelled. You must not count any cancelled tests in Column 1 or in any other column. For instance, you must not count a positive result (in Column 3) if it had ultimately been cancelled for any reason (e.g., specimen was initially reported positive, but the split failed to reconfirm).

[Example: If a pre-employment test was reported cancelled, "1" would be entered in Column 13 on the Pre-Employment row. If three of the company's random test results were reported cancelled, "3" would be entered in Column 13 on the Random row.]

TOTAL Line. Columns 1 through 13 ~ This line requires you to add the numbers in each column and provide the totals.

Section IV. Alcohol Testing Data

This section summarizes the alcohol testing conducted for all covered employees (to include applicants). The table in this section requires alcohol test data by test type and by result. The categories of test types are: Pre-Employment; Random; Post-Accident; Reasonable Suspicion / Reasonable Cause; Return-to-Duty, and Follow-Up.

The categories of results are: Number of Screening Test Results; Screening Tests with Results Below 0.02; Screening Tests with Results 0.02 Or Greater; Number of Confirmation Test Results; Confirmation Tests with Results 0.02 through 0.039; Confirmation Tests with Results 0.04 Or Greater; Refusals due to "Shy Lung" with No Medical Explanation, and Other Refusals to Submit to Testing; and Cancelled Results.

TIP *~ Be sure to enter all pre-employment testing data regardless of whether an applicant was hired or not. Of course, for most employers pre-employment alcohol testing is optional, so you may not have conducted this type of testing. You do not need to separate "reasonable suspicion" and "reasonable cause" alcohol testing data on the MIS form. [Therefore, if you conducted only reasonable suspicion alcohol testing (i.e., FMCSA, FAA, FTA, and RSPA), enter that data; if you conducted both reasonable suspicion and reasonable cause alcohol testing (i.e.., FRA), simply enter the data with no differentiation.] RSPA does not authorize "random" testing for alcohol. Finally, you may leave blank any row or column in which there were no results, or you may enter "0" (zero) instead. Please note that USCG-regulated employers do not report alcohol test results on the MIS form: Do not fill-out Section IV if you are a USCG-regulated employer.*

Section IV, Column 1. Total Number of Screening Test Results ~ This column requires a count of the total number of screening test results in each testing category during the entire reporting year. Count the number of screening tests as the number of screening test events with final screening results of below 0.02, of 0.02 through 0.039, of 0.04 or greater, and all refusals. Do not count cancelled tests in this total.

[Example: A company that conducted twenty pre-employment tests would enter "20" on the Pre-Employment row. If it conducted fifty random tests, "50' would be entered. If that company did no post-accident, reasonable suspicion, reasonable cause, return-to-duty, or follow-up tests, those categories will be left blank or zeros entered.]

Section IV, Column 2. Screening Tests With Results Below 0.02 ~ This column requires a count of the number of tests in each testing category that the BAT or STT reported as being below 0.02 on the screening test.

[Example: If seventeen of the company's twenty pre-employment screening tests were reported as being below 0.02, "17" would be entered in Column 2 on the Pre-Employment row. If forty-four of the company's fifty random screening test results were reported as being below 0.02, "44" would be entered in Column 2 on the Random row. Because the company did no other testing, those other categories would be left blank or zeros entered.]

Section IV, Column 3. Screening Tests With Results 0.02 Or Greater ~ This column requires a count of the number of screening tests in each testing category that BAT or STT reported as being 0.02 or greater on the screening test.

[Example: If one of the twenty pre-employment tests was reported as being 0.02 or greater, "1" would be entered in Column 3 on the Pre-Employment row. If four of the company's fifty random test results were reported as being 0.02 or greater, "4" would be entered in Column 3 on the Random row.]

Section IV, Column 4. Number of Confirmation Test Results ~ This column requires entry of the number of confirmation tests that were conducted by a BAT as a result of the screening tests that were found to be 0.02 or greater. In effect, all screening tests of 0.02 or greater should have resulted in confirmation tests. Ideally the number of tests in Column 3 and Column 4 should be the same. However, we know that this required confirmation test sometimes does not occur. In any case, the number of confirmation tests that were actually performed should be entered in Column 4.

[Example: If the one pre-employment screening test reported as 0.02 or greater had a subsequent confirmation test performed by a BAT, "1" would be entered in Column 4 on the Pre-Employment row. If three of the four random screening tests that were found to be 0.02 or greater had a subsequent confirmation test performed by a BAT, "3" would be entered in Column 4 on the Random row.]

Section IV, Column 5. Confirmation Tests With Results 0.02 Through 0.039 ~ This column requires entry of the number of confirmation tests that were conducted by a BAT that led to results that were 0.02 through 0.039.

[Example: If the one pre-employment confirmation test yielded a result of 0.042, Column 5 of the Pre-Employment row would be left blank or zeros entered. If two of the random confirmation tests yielded results of 0.03 and 0.032, "2" would be entered in Column 5 of the Random row.]

Section IV, Column 6. Confirmation Tests With Results 0.04 Or Greater ~ This column requires entry of the number of confirmation tests that were conducted by a BAT that led to results that were 0.04 or greater.

[Example: Because the one pre-employment confirmation test yielded a result of 0.042, "1" would be entered in Column 6 of the Pre-Employment row. If one of the random confirmation tests yielded a result of 0.04, "1" would be entered in Column 6 of the Random row.]

TIP ~ *Column 1 should equal the sum of Columns 2, 3, 7, and 8. The number of screening tests results should reflect the number of screening tests you have no matter the result (below 0.02 or at or above 0.02, plus refusals to test), unless of course, the tests were ultimately cancelled. So, Column 1 = Column 2 + Column 3 + Column 7 + Column 8. Certainly, double check your records to determine if your actual screening results count is reflective of all these counts.*

There is no need to record MIS confirmation tests results below 0.02: That is why we have no column for it on the form. [If the random test that screened 0.02 went to a confirmation test, and that confirmation test yielded a result below 0.02, there is no place for that confirmed result to be entered.] We assume that if a confirmation test was completed but not listed in either Column 5 or Column 6, the result was below 0.02. In addition, if the confirmation test ended up being cancelled, it should not have been included in Columns 1, 3, or 4 in the first place.

Section IV, Columns 7 and 8. Refusal Results ~ The refusal section is divided into two refusal groups – they are: Shy Lung ~ With No Medical Explanation; and Other Refusals To Submit to Testing. When an individual does not provide enough breath at the test site, the company requires the employee to have a medical evaluation to determine if there exists a medical reason for the person's inability to provide the appropriate amount of breath. If there is no medical reason to support the inability as reported by the examining physician, the employer calls the result a refusal to test: Refusals of this type are reported in the "Shy Lung ~ With No Medical Explanation" category.

Finally, additional reasons exist for a test to be considered a refusal. Some examples are: the employee fails to report to the test site as directed by the employer; the employee leaves the test site without permission; the employee fails to sign the certification at Step 2 of the ATF; the employee refuses to have a required shy lung evaluation. Again, these are only four examples; there are more.

■ **Section IV, Column 7. "Shy Lung" ~ With No Medical Explanation** ~ This column requires the count of the number of tests in which there is no medical reason to support the employee's inability to provide an adequate breath as reported by the examining physician; subsequently, the employer called the result a refusal to test.

[Example: If one of the 50 random tests was a refusal because of shy lung, "1" would be entered in Column 7 of the Random row.]

■ **Section IV, Column 8. Other Refusals To Submit To Testing** ~ This column requires the count of refusals other than those already entered in Columns 7.

[Example: The company entered "50" as the number of random specimens collected, however it had one employee who did not show up at the testing site as directed. Because of this one refusal event, "1" would be entered in Column 8 of the Random row.]

TIP *~ Even though some testing events result in a refusal in which no breath (or saliva) was tested, there is an expectation that your overall numbers for screening tests (in Column 1) will equal the total number of screening tests with results below 0.02 (Column 2); screening tests with results 0.02 or greater (Column 3); and refusals (Columns 7 and 8). Do not worry that no breath (or saliva) was tested for some refusals; all refusals are counted as a screening test event for MIS purposes and for establishing random rates.*

Section IV, Column 9. Cancelled Tests ~ This column requires a count of the number of tests in each testing category that the BAT or STT reported as cancelled. Do not count any cancelled tests in Column 1 or in any other column other than Column 9. For instance, you must not count a 0.04 screening result or confirmation result in any column, other than Column 9, if the test was ultimately cancelled for some reason (e.g., a required air blank was not performed).

[Example: If a pre-employment test was reported cancelled, "1" would be entered in Column 9 on the Pre-Employment row. If three of the company's random test results were reported cancelled, "3" would be entered in Column 13 on the Random row.]

TOTAL Line. Columns 1 through 9 ~ This line requires you to add the numbers in each column and provide the totals.

[68 FR 43952, July 25, 2003]

PART 41—SEISMIC SAFETY

Sec.

41.100 Purpose and applicability.
41.105 Definitions.
41.110 New DOT owned buildings and additions to buildings.
41.115 New buildings to be leased for DOT occupancy.
41.117 Buildings built with Federal assistance.
41.119 DOT regulated buildings.
41.120 Acceptable model codes.
41.125 Judicial review.

AUTHORITY: 42 U.S.C. 7701 *et seq.*; 49 U.S.C. 322; E.O. 12699, 3 CFR, 1990 Comp., p. 269.

SOURCE: 58 FR 32871, June 14, 1993, unless otherwise noted.

§ 41.100 Purpose and applicability.

(a) This part implements the provisions of 49 U.S.C. 7701 *et seq.* and Executive Order (E.O.) 12699, ''Seismic Safety of Federal and Federally-Assisted or Regulated New Building Construction'' (3 CFR, 1990 Comp., p. 269). Under the Executive Order the DOT is given the responsibility for developing and implementing its own mission-appropriate and cost-effective regulations governing seismic safety.

(b) This part applies to new DOT owned buildings and to new DOT leased, assisted and regulated buildings. The purpose of this part is to reduce risk to lives of the building occupants, improve the capabilities of essential buildings to function during or after an earthquake, and to reduce earthquake losses of public buildings and investments.

(c) This part may be further implemented by the DOT Operating Administrations.

§ 41.105 Definitions.

As used in this part—

Operating Administration includes the Office of the Secretary.

DOT means the U.S. Department of Transportation.

§ 41.110 New DOT owned buildings and additions to buildings.

(a) DOT Operating Administrations responsible for the design and construction of new DOT Federally owned buildings will ensure that each building is designed and constructed in accord with the seismic design and construction standards set out in § 41.120 of this part.

(b) This section pertains to all building projects for which development of detailed plans and specifications was initiated after January 5, 1990. It applies to additions to existing buildings as well as to new buildings. It applies worldwide.

(c) For DOT Federally owned buildings, a certification of compliance with the seismic design and construction requirements of this part is required prior to the acceptance of the building. Such statements of compliance may include the engineer's and architect's authenticated verifications of seismic design codes, standards, and practices used in the design and construction of the building, construction observation reports, local or state building department plan review documents, or other

documents deemed appropriate by the DOT Operating Administration.

§ 41.115 New buildings to be leased for DOT occupancy.

(a) DOT Operating Administrations responsible for the design and construction of new buildings to be leased for DOT occupancy or use will ensure that each building is designed and constructed in accord with the seismic design and construction standards set out in § 41.120 of this part.

(b) This section pertains to all new building projects for which the agreement covering development of detailed plans and specifications was executed after January 5, 1990.

(c) For new Federally leased buildings, a certification of compliance with the seismic design and construction requirements of this part is required prior to the acceptance of the building. Such statements of compliance may include the engineer's and architect's authenticated verifications of seismic design codes, standards, and practices used in the design and construction of the building, construction observation reports, local or state building department plan review documents, or other documents deemed appropriate by the DOT Operating Administration.

§ 41.117 Buildings built with Federal assistance.

(a) Each DOT Operating Administration assisting in the financing, through Federal grants or loans, or guaranteeing the financing, through loan or mortgage insurance programs, of newly constructed buildings will ensure that any building constructed with such assistance is constructed in accord with seismic standards set out in § 41.120 of this part.

(b) This section applies to new buildings and additions to existing buildings financed in whole or in part through Federal grants or loans administered by DOT Operating Administrations, or through guaranteed financing through loan or mortgage insurance programs administered by DOT Operating Administrations.

(c) Any building constructed with Federal financial assistance, after July 14, 1993 must be designed and constructed in accord with seismic standards approved by the DOT operating Administration under § 41.120 of this part in order to be eligible for Federal financial assistance.

(d) For buildings built with Federal financial assistance, a certification of compliance with the seismic design and construction requirements of this part is required prior to the furnishing of such assistance. Such statements of compliance may include the engineer's and architect's authenticated verifications of seismic design codes, standards, and practices used in the design and construction of the building, construction observation reports, local or state building department plan review documents, or other documents deemed appropriate by the DOT Operating Administration.

§ 41.119 DOT regulated buildings.

(a) Each DOT Operating Administration with responsibility for regulating the structural safety of buildings and additions to existing buildings will ensure that each DOT regulated building is designed and constructed in accord with seismic design and construction standards as provided by this part.

(b) This section pertains to all new building projects for which development of detailed plans and specifications begin after July 14, 1993.

(c) Any building for which a DOT Operating Administration responsible for regulating the structural safety must comply with the seismic design and construction standards in this part.

(d) For DOT regulated buildings a certification of compliance with the seismic design and construction requirements of this part is required prior to the acceptance of the building. Such statements of compliance may include the engineer's and architect's authenticated verification of seismic design codes, standards, and practices used in the design and construction of the building, construction observation reports, local or state building department plan review documents, or other documents deemed appropriate by the DOT Operating Administration.

§ 41.120 Acceptable model codes.

(a) This section describes the standards that must be used to meet the

seismic design and construction requirements of this part.

(b)(1) The following are model codes which have been found to provide a level of seismic safety substantially equivalent to that provided by use of the 1988 National Earthquake Hazards Reduction Program (NEHRP) Recommended Provisions (Copies are available from the Office of Earthquakes and Natural Hazards, Federal Emergency Management Agency, 500 C Street, SW., Washington, DC 20472.):

(i) The 1991 International Conference of Building Officials (ICBO) Uniform Building Code, published by the International Conference of Building Officials, 5360 South Workman Mill Rd., Whittier, Cal. 90601;

(ii) The 1992 Supplement to the Building Officials and Code Administrators International (BOCA) National Building Code, published by the Building Officials and Code Administrators, 4051 West Flossmoor Rd., Country Club Hills, Ill. 60478–5795; and

(iii) The 1992 Amendments to the Southern Building Code Congress (SBCC) Standard Building Code, published by the Southern Building Code Congress International, 900 Montclair Rd., Birmingham, Ala. 35213–1206.

(2) Versions of the NEHRP seismic maps have been adopted along with the NEHRP Recommended Provisions into the BOCA National and SBCC Standard building codes. The seismic zone map in the ICBO Uniform Building Code is also based on one of the USGS maps of horizontal ground acceleration. However, the ICBO map should be used only with the ICBO code. Also, it is not appropriate to use the NEHRP maps with the ICBO Uniform Building Code, because the design requirements of building codes are keyed to the numerical values of the map they reference.

(c) Revisions to the model codes listed in paragraph (b) of this section that are substantially equivalent to or exceed the then current or immediately preceding edition of the NEHRP recommended provisions, as it is updated, may be approved by a DOT Operating Administration to meet the requirements in this part.

(d) State, county, local, or other jurisdictional building ordinances adopting and enforcing the model codes, listed in paragraph (b) of this section, in their entirety, without significant revisions or changes in the direction of less seismic safety, meet the requirements in this part. For ordinances that do not adopt the model codes listed in paragraph (b) of this section, substantial equivalency of the ordinances to the seismic safety level contained in the NEHRP recommended provisions must be determined by the DOT Operating Administration before the ordinances may be used to meet the requirements of this part.

(e) DOT Operating Administrations that, as of January 5, 1990, required seismic safety levels higher than those imposed by this part in new building construction programs will continue to maintain such levels in force.

(f) Emergencies. Nothing in this part applies to assistance provided for emergency work or for assistance essential to save lives and protect property and public health and safety performed pursuant to sections 402, 403, 502, and 503 of the Robert T. Stafford Disaster Relief and Emergency Assistance Act (Stafford Act), 42 U.S.C. 5170a, 5170b, 5192, and 5193, or for temporary housing assistance programs and individual and family grants performed pursuant to Sections 408 and 411 of the Stafford Act, 42 U.S.C. 5174 and 5178. However, this part applies to other provisions of the Stafford Act after a Presidentially declared major disaster or emergency when assistance actions involve new construction or total replacement of a building.

§ 41.125 Judicial review.

Nothing in this part is intended to create any right or benefit, substantive or procedural, enforceable at law by a party against the DOT, its Operating Administrations, its officers, or any person.

PART 71—STANDARD TIME ZONE BOUNDARIES

Sec.

71.1 Limits defined; exceptions authorized for certain rail operating purposes only.
71.2 Annual advancement of standard time.
71.3 Atlantic zone.
71.4 Eastern zone.
71.5 Boundary line between eastern and central zones.

71.6 Central zone.
71.7 Boundary line between central and mountain zones.
71.8 Mountain zone.
71.9 Boundary line between mountain and Pacific zones.
71.10 Pacific zone.
71.11 Alaska zone.
71.12 Hawaii-Aleutian zone.
71.13 Samoa zone.
71.14 Chamorro Zone.

AUTHORITY: Secs. 1–4, 40 Stat. 450, as amended; sec. 1, 41 Stat. 1446, as amended; secs. 2–7, 80 Stat. 107, as amended; 100 Stat. 764; Act of Mar. 19, 1918, as amended by the Uniform Time Act of 1966 and Pub. L. 97–449, 15 U.S.C. 260–267; Pub. L. 99–359; Pub. L. 106–564, 15 U.S.C. 263, 114 Stat. 2811; 49 CFR 1.59(a), unless otherwise noted.

SOURCE: Amdt. 71–11, 35 FR 12318, Aug. 1, 1970, unless otherwise noted.

§ 71.1 Limits defined; exceptions authorized for certain rail operating purposes only.

(a) This part prescribes the geographic limits of each of the eight standard time zones established by section 1 of the Standard Time Act, as amended by section 4 of the Uniform Time Act of 1966 (15 U.S.C. 261). It also contains lists of operating exceptions granted for specified rail carriers, whose operations cross the time zone boundaries prescribed by this part, authorizing them to carry the standard of time on which the major portion of a particular operation is conducted into an adjoining time zone.

(b) Any rail carrier whose operations cross a time zone boundary prescribed by this part may apply for an operating exception to the General Counsel, Department of Transportation, Washington, DC 20590. However, each rail carrier for which an operating exception is granted shall, in its advertisements, time cards, station bulletin boards, and other publications, show arrival and departure times in terms of the standard time for the place concerned.

(c) The time zones established by the Standard Time Zone Act, as amended by the Uniform Time Act of 1966, are Atlantic, eastern, central, mountain, Pacific, Alaska, Hawaii-Aleutian, and Samoa.

[Amdt. 71–11, 35 FR 12318, Aug. 1, 1970, as amended by Amdt. 71–21, 52 FR 41631, Nov. 18, 1986]

§ 71.2 Annual advancement of standard time.

(a) The Uniform Time Act of 1966 (15 U.S.C. 260a(a)), as amended, requires that the standard time of each State observing Daylight Saving Time shall be advanced 1 hour beginning at 2:00 a.m. on the first Sunday in April of each year and ending on the last Sunday in October. This advanced time shall be the standard time of each zone during such period. The Act authorizes any State to exempt itself from this requirement. States in two or more time zones may exempt the easternmost time zone portion from this requirement.

(b) Section 3(b) of the Uniform Time Act of 1966 (15 U.S.C. 260a(b)) provides that ''it is the express intent of Congress * * * to supersede any and all laws of the States or political subdivisions thereof insofar as they may now or hereafter provide for advances in time or changeover dates different from those specified in [section 3(a) of that Act]'', which are those specified in paragraph (a) of this section.

[Amdt. 71–11, 35 FR 12318, Aug. 1, 1970, as amended by Amdt. 71–21, 52 FR 41631, Nov. 18, 1986]

§ 71.3 Atlantic zone.

The first zone, the Atlantic standard time zone, includes that part of the United States that is between 52°30″ W. longitude and 67°30″ W. longitude and that part of the Commonwealth of Puerto Rico that is west of 67°30″ W. longitude, but does not include any part of the State of Maine.

§ 71.4 Eastern zone.

The second zone, the eastern standard time zone, includes that part of the United States that is west of 67°30″ W. longitude and east of the boundary line described in § 71.5, and includes all of the State of Maine, but does not include any part of the Commonwealth of Puerto Rico.

§ 71.5 Boundary line between eastern and central zones.

(a) *Minnesota-Michigan-Wisconsin.* From the junction of the western boundary of the State of Michigan with the boundary between the United

States and Canada northerly and easterly along the west line of Gogebic County to the west line of Ontonagon County; thence south along the west line of Ontonagon County to the north line of Gogebic County; thence southerly and easterly along the north line of Gogebic County to the west line of Iron County; thence north along the west line of Iron County to the north line of Iron County; thence east along the north line of Iron County to the east line of Iron County; thence south along the east line of Iron County to the north line of Dickinson County; thence east along the north line of Dickinson County to the east line of Dickinson County; thence south along the east line of Dickinson County to the north line of Menominee County; thence east along the north line of Menominee County to the east line of Menominee County; thence southerly and easterly along the east line of Menominee County to Lake Michigan; thence east to the western boundary of the State of Michigan; thence southerly and easterly along the western boundary of the State of Michigan to a point in the middle of Lake Michigan opposite the main channel of Green Bay; thence southerly along the western boundary of the State of Michigan to its junction with the southern boundary thereof and the northern boundary of the State of Indiana.

(b) *Indiana-Illinois.* From the junction of the western boundary of the State of Michigan with the northern boundary of the State of Indiana easterly along the northern boundary of the State of Indiana to the east line of LaPorte County; thence southerly along the east line of LaPorte County to the north line of Starke County; thence east along the north line of Starke County to the west line of Marshall County; thence south along the west line of Marshall County; thence west along the north line of Pulaski County to the east line of Jasper County; thence south along the east line of Jasper County to the south line of Jasper County; thence west along the south lines of Jasper and Newton Counties to the western boundary of the State of Indiana; thence south along the western boundary of the State of Indiana to the north line of Gibson County; thence easterly and northerly along the north line of Gibson County to the west line of Pike County; thence south along the west line of Pike County to the north line of Warrick County; thence east along the north line of Warrick and Spencer Counties to the west line of Perry County; thence easterly and southerly along the north and east line of Perry County to the Indiana-Kentucky boundary.

(c) *Kentucky.* From the junction of the east line of Perry County, Ind., with the Indiana-Kentucky boundary easterly along that boundary to the west line of Meade County, Ky.; thence southeasterly and southwesterly along the west lines of Meade and Hardin Counties to the southwest corner of Hardin County; thence along the south lines of Hardin and Larue Counties to the northwest corner of Taylor County; thence southeasterly along the west (southwest) lines of Taylor County and northeasterly along the east (southeast) line of Taylor County to the west line of Casey County; and thence southerly along the west and south lines of Casey and Pulaski Counties to the intersection with the western boundary of Wayne County; and then south along the western boundary of Wayne County to the Kentucky-Tennessee boundary.

(d) *Tennessee.* From the junction of the west line of McCreary County, Ky., with the Kentucky-Tennessee boundary westerly along that boundary to the west line of Scott County, Tenn.; thence southerly along the west line of Scott County, the north and west lines of Morgan County, and the north line of Roane County to the north line of Rhea County; thence northwesterly along the north line of Rhea County; and thence southwesterly along the west lines of Rhea and Hamilton Counties to the Tennessee-Georgia boundary.

(e) *Georgia-Alabama.* From the junction of the west line of Hamilton County, Tenn., with the Tennessee-Georgia boundary westerly along that boundary to its junction with the Alabama-Georgia boundary; thence southerly along that boundary and the Florida-Georgia boundary to the southwest corner of the State of Georgia.

(f) *Florida.* From the southwest corner of the State of Georgia to the midpoint of the Apalachicola River on the downstream side of Jim Woodruff Dam; thence southerly along the middle of the main channel of the Apalachicola River to its intersection with the Jackson River; thence westerly along the center of the Jackson River to its intersection with the Intracoastal Waterway; thence westerly along the center of the Intracoastal Waterway to the west line of Gulf County; thence southerly along the west line of Gulf County to the Gulf of Mexico.

(g) [Reserved]

(h) *Municipalities on boundary line.* All municipalities located upon the zone boundary line described in this section are in the central standard time zone.

[Amdt. 71–11, 35 FR 12318, Aug. 1, 1970, as amended by Amdt. 71–12, 37 FR 11972, June 16, 1972; Amdt. 71–13, 38 FR 9229, Apr. 12, 1973; Amdt. 71–14, 38 FR 13725, May 25, 1973; Amdt. 77–13, 42 FR 56610, Oct. 27, 1977; Amdt. 91–17, 56 FR 52003, Oct. 17, 1991; 65 FR 50158, Aug. 17, 2000; 71 FR 3245, Jan. 20, 2006; 72 FR 6177, Feb. 9, 2007; 72 FR 54377, Sept. 25, 2007]

§ 71.6 Central zone.

The third zone, the central standard time zone, includes that part of the United States that is west of the boundary line between the eastern and central standard time zones described in § 71.5 and east of the boundary line between the central and mountain standard time zones described in § 71.7.

§ 71.7 Boundary line between central and mountain zones.

(a) *Montana-North Dakota.* Beginning at the junction of the Montana-North Dakota boundary with the boundary of the United States and Canada southerly along the Montana-North Dakota boundary to the Missouri River; thence southerly and easterly along the middle of that river to the midpoint of the confluence of the Missouri and Yellowstone Rivers; thence southerly and easterly along the middle of the Yellowstone River to the north boundary of T. 150 N., R. 104 W.; thence east to the northwest corner of T. 150 N., R. 102 W.; thence south to the southwest corner of T. 149 N., R. 102 W.; thence east to the northwest corner of T. 148 N., R. 102 W.; thence south to the northwest corner of 147 N., R. 102 W.; thence east to the southwest corner of T. 148 N., R. 101 W., thence south to the middle of the Little Missouri; thence easterly and northerly along the middle of that river to the midpoint of its confluence with the Missouri River; thence southerly and easterly along the middle of the Missouri River to the midpoint of its confluence with the northern land boundary of Oliver County; thence west along the northern county line to the northwest boundary; thence south along the western county line to the southwest boundary; thence west along the northern county boundary of Morton County; thence south along the western county boundary of Morton County and then east and south along the southern county boundary to the intersection with the boundary with Sioux County; thence west and south along the northern boundary of Sioux County to the center of State Highway 31; thence south along the center of State Highway 31 to the state border with South Dakota; thence east along the southern boundary of Sioux County to the middle of the Missouri River.

(b) South Dakota. From the junction of the North Dakota-South Dakota boundary with the Missouri River southerly along the main channel of that river to the crossing of the original Chicago & North Western Railway near Pierre; thence southwesterly to the northern boundary of Jones County at the northeast corner of the NE 1, Sec. 6, T. 2 N., R. 30 E.; thence west along the northern boundary of Jones County; thence south along the western boundaries of Jones, Mellette and Todd Counties to the South Dakota-Nebraska boundary.

(c) *Nebraska.* From the junction of the west line of Tripp County, South Dakota with the South Dakota-Nebraska boundary west along that boundary to the west line of R. 30 W.; thence south along the range line between Rs. 30 and 31 W. to the southwest corner of sec. 19, T. 33 N., R. 30 W.; thence easterly along section lines to the northeast corner of sec. 29, T. 33 N., R. 30 W.; thence southerly along section lines with their offsets to the northeast corner of sec. 17, T. 32 N., R. 30 W.; thence westerly along section lines to the northwest corner of sec. 18,

T. 32 N., R. 30 W.; thence southerly along the range line to the southwest corner of T. 31 N., R. 30 W.; thence easterly along the township line to the northeast corner of T. 30 N., R. 30 W.; thence southerly along the range line to the southwest corner of T. 29 N., R. 29 W.; thence westerly along the township line to the northwest corner of sec. 4, T. 28 N., R. 30 W.; thence southerly along section lines to the southwest corner of sec. 33, T. 28 N., R. 30 W.; thence easterly along the township line to the northeast corner of sec. 4, T. 27 N., R. 30 W.; thence southerly along section lines to the southwest corner of sec. 22, T. 26 N., R. 30 W.; thence easterly along section lines to the southeast corner of sec. 24, T. 26 N., R. 30 W.; thence southerly along the range line to the north line of Thomas County; thence westerly along the north line of Thomas County to the west line of Thomas County; thence south along the west line of Thomas County to the north line of McPherson County; thence west along the north line of McPherson County to the west line of McPherson County; thence south along the west line of McPherson County to the north line of Keith County; thence east along the north line of Keith County to the west line of Lincoln County; thence south along the west line of Lincoln County to the north line of Hayes County; thence west along the north lines of Hayes County to the west line of Hayes County; thence south along the west line of Hayes and Hitchcock Counties to the Nebraska-Kansas boundary.

(d) *Kansas-Colorado.* From the junction of the west line of Hitchcock County, Nebraska, with the Nebraska-Kansas boundary westerly along that boundary to the northwest corner of the State of Kansas; thence southerly along Kansas-Colorado boundary to the north line of Sherman County, Kansas; thence easterly along the north line of Sherman County to the east line of Sherman County; thence southerly along the east line of Sherman County to the north line of Logan County; thence westerly along the north line of Logan County to the east line of Wallace County; thence southerly along the east line of Wallace County to the north line Wichita County; thence westerly along the north line of Wichita County; thence westerly along the north line of Wichita County to the east line of Greeley County; thence southerly along the east lines of Greeley County and Hamilton Counties; thence westerly along the south line of Hamilton County to the Kansas-Colorado boundary; thence southerly along the Kansas Colorado boundary to the junction of that boundary with the north boundary of the State of Oklahoma.

(e) *Oklahoma-Texas-New Mexico.* From the junction of the Kansas-Colorado boundary with the northern boundary of the State of Oklahoma westerly along the Colorado-Oklahoma boundary to the northwest corner of the State of Oklahoma; thence southerly along the west boundary of the State of Oklahoma and the west boundary of the State of Texas to the southeast corner of the State of New Mexico; thence westerly along the Texas-New Mexico boundary to the east line of Hudspeth County, Tex.; thence southerly along the east line of Hudspeth County, Tex., to the boundary between the United States and Mexico.

(f) [Reserved]

(g) *Points on boundary line.* All municipalities located upon the zone boundary line described in this section are in the mountain standard time zone, except Murdo, S. Dak., which is in the central standard time zone.

[Amdt. 71–11, 35 FR 12318, Aug. 1, 1970, as amended by Amdt. 71–14, 38 FR 13725, May 25, 1973; Amdt. 71–16, 43 FR 42763, Sept. 21, 1978; 55 FR 30914, July 30, 1990; 57 FR 48339, Oct. 23, 1992; 68 FR 43336, July 22, 2003; 68 FR 49373, Aug. 18, 2003; 68 FR 61372, Oct. 28, 2003]

§ 71.8 Mountain zone.

The fourth zone, the mountain standard time zone, includes that part of the United States that is west of the boundary line between the central and mountain standard time zones described in § 71.7 and east of the boundary line between the mountain and Pacific standard time zones described in § 71.9.

§ 71.9 Boundary line between mountain and Pacific zones.

(a) *Montana-Idaho-Oregon.* From the junction of the Idaho-Montana boundary with the boundary between the United States and Canada southerly along the Idaho-Montana boundary to the boundary line between Idaho County, Idaho, and Lemhi County, Idaho; thence southwesterly along the boundary line between those two counties to the main channel of the Salmon River; thence westerly along the main channel of the Salmon River to the Idaho-Oregon boundary; thence southerly along that boundary to the boundary line between Baker County, Oreg., and Malheur County, Oreg.; thence westerly along the north line of Malheur County to the northwest corner of Malheur County; thence southerly along the west line of Malheur County to the southwest corner of T. 35 S., R. 37 E.; thence east to the Idaho-Oregon boundary; thence south along that boundary to the southwest corner of the State of Idaho; thence easterly along the Idaho-Nevada boundary to the northeast corner of the State of Nevada.

(b) *Utah-Nevada-Arizona-California.* From the northeast corner of the State of Nevada southerly along the Utah-Nevada boundary to the junction with the northern border of the City of West Wendover, Nevada. Then westward along the northern, western, and southern boundaries of the City of West Wendover back to the Utah-Nevada boundary. Then southerly along the Utah-Nevada boundary, the Nevada-Arizona boundary, and the Arizona-California boundary to the boundary between the United States and Mexico.

(c) [Reserved]

(d) *Points on boundary line.* All municipalities located upon the zone boundary line described in this section are in the mountain standard time zone.

[Amdt. 71–11, 35 FR 12318, Aug. 1, 1970, as amended by Amdt. 71–14, 38 FR 13725, May 25, 1973; 64 FR 56707, Oct. 21, 1999]

§ 71.10 Pacific zone.

The fifth zone, the Pacific standard time zone, includes that part of the continental United States that is west of the boundary line between the mountain and Pacific standard time zones described in § 71.9, but does not include any part of the State of Alaska.

(Act of March 19, 1918, as amended by the Uniform Time Act of 1966 and Pub. L. 97–449, 15 U.S.C. 260–264; 49 CFR 1.59(a)).

[Amdt. 71–19, 48 FR 43281, Sept. 22, 1983]

§ 71.11 Alaska zone.

The sixth zone, the Alaska standard time zone, includes the entire State of Alaska, except as provided in § 71.12 of this title.

(Act of March 19, 1918, as amended by the Uniform Time Act of 1966 and Pub. L. 97–449, 15 U.S.C. 260–264; 49 CFR 1.59(a)).

[Amdt. 71–19, 48 FR 43281, Sept. 22, 1983, as amended by Amdt. 71–20, 48 FR 55289, Dec. 12, 1983]

§ 71.12 Hawaii-Aleutian zone.

The seventh zone, the Hawaii-Aleutian standard time zone, includes the entire State of Hawaii and, in the State of Alaska, that part of the Aleutian Islands that is west of 169 degrees 30 minutes west longitude.

(Act of March 19, 1918, as amended by the Uniform Time Act of 1966 and Pub. L. 97–449, 15 U.S.C. 260–264; 49 CFR 1.59(a)).

[Amdt. 71–19, 48 FR 43281, Sept. 22, 1983, as amended by Amdt. 71–20, 48 FR 55289, Dec. 12, 1983]

§ 71.13 Samoa zone.

The eighth zone, the Samoa standard time zone, includes that part of the United States that is between 169 degrees 30 minutes west longitude and 172 degrees 30 minutes west longitude, but does not include any part of the States of Hawaii and Alaska.

(Act of March 19, 1918, as amended by the Uniform Time Act of 1966 and Pub. L. 97–449, 15 U.S.C. 260–264; 49 CFR 1.59(a)).

[Amdt. 71–19, 48 FR 43281, Sept. 22, 1983, as amended by Amdt. 71–20, 48 FR 55289, Dec. 12, 1983]

§ 71.14 Chamorro Zone.

The ninth zone, the Chamorro standard time zone, includes the Island of Guam and the Commonwealth of the Northern Mariana Islands.

[68 FR 49712, Aug. 19, 2003]

PART 79—MEDALS OF HONOR

Sec.
79.1 Scope.
79.3 Application.
79.5 Investigation.
79.7 Award.
79.9 Design.

AUTHORITY: 49 U.S.C. 80504.

SOURCE: 61 FR 17578, Apr. 22, 1996, unless otherwise noted.

§ 79.1 Scope.

(a) This part implements 49 U.S.C. 80504, which authorizes the President of the United States to award a bronze medal for bravery to any person who, by extreme daring, risks his/her life in trying to prevent, or to save the life of a person in, a grave accident/incident in the United States that involves an interstate rail carrier or a motor vehicle being operated on public highways.

(b) The actions for which the medal may be awarded must reflect such unusual daring and bravery that a person would not normally be expected to perform them as a regular part of his/her regular work or vocation.

§ 79.3 Application.

(a) Any person may apply for the award of the medal described in §79.1, but only on behalf of another person, by writing to the Secretary of Transportation, Attention: Medals of Honor, within two (2) years of the action that is the subject of the application.

(b) Although no application form is required, the following information must be provided:

(1) Name, address, and telephone number of the person submitting the application.

(2) Name, address, and telephone number of the person on whose behalf the application is submitted.

(3) Date, time, place, and weather conditions of the action that is the subject of the application.

(4) Identification of rail or motor carrier involved, or of operator of motor vehicles involved.

(5) Identification of any public or private authority that investigated the accident/incident involved.

(6) Name, address, and telephone number of any witness to the action that is the subject of the application.

(7) Detailed description of the action that is the subject of the application, including why the person submitting the application thinks that the action merits the extraordinary recognition embodied in the Medal of Honor.

(c) An application and any documentary or other evidence supporting it must be supported by oath or affirmation, or by the signer's acknowledgment that a knowingly false statement is punishable as perjury.

§ 79.5 Investigation.

The Department of Transportation may make any investigation of an application that it deems appropriate, including the taking of testimony under oath or affirmation.

§ 79.7 Award.

If the Secretary of Transportation decides that it is warranted, the Secretary shall award the Medal on behalf of and in the name of the President of the United States.

§ 79.9 Design.

The Department is authorized to adopt and revise the existing designs for the award, rosette, and ribbon provided for by statute.

PART 80—CREDIT ASSISTANCE FOR SURFACE TRANSPORTATION PROJECTS

Sec.
80.1 Purpose.
80.3 Definitions.
80.5 Limitations on assistance.
80.7 Application process.
80.9 Federal requirements.
80.11 Investment-grade ratings.
80.13 Threshold criteria.
80.15 Selection criteria.
80.17 Fees.
80.19 Reporting requirements.
80.21 Use of administrative offset.

AUTHORITY: Secs. 1501 *et seq.*, Pub. L. 105–178, 112 Stat. 107, 241, as amended; 23 U.S.C. 181–189 and 315; 49 CFR 1.48, 1.49, and 1.51.

SOURCE: 64 FR 29750, June 2, 1999, unless otherwise noted.

§ 80.1 Purpose.

This part implements a Federal credit assistance program for surface transportation projects.

§ 80.3 Definitions.

The following definitions apply to this part:

Administrative offset means the right of the government to apply moneys held by the government and otherwise owed to a debtor for the extinguishment of claims due the government from the debtor.

Conditional term sheet means a contractual agreement between the U.S. Department of Transportation (DOT) and the project sponsor (and the lender, if applicable) by which the DOT reserves TIFIA funding for a specific project and commits to providing Federal credit assistance to that project at a future point in time upon satisfaction of specified conditions and subject to the future availability of obligation authority. The DOT will not legally obligate budget authority until those conditions are met. Upon satisfaction of those conditions, the conditional term sheet can be amended and/or restated to trigger an obligation of funds.

Credit agreement means a contractual agreement between the DOT and the project sponsor (and the lender, if applicable) that formalizes the terms and conditions established in the term sheet (or conditional term sheet) and authorizes the execution of a secured loan, loan guarantee, or line of credit.

Eligible project costs mean amounts substantially all of which are paid by, or for the account of, an obligor in connection with a project, including the cost of:

(1) Development phase activities, including planning, feasibility analysis, revenue forecasting, environmental review, permitting, preliminary engineering and design work, and other pre-construction activities;

(2) Construction, reconstruction, rehabilitation, replacement, and acquisition of real property (including land related to the project and improvements to land), environmental mitigation, construction contingencies, and acquisition of equipment; and

(3) Capitalized interest necessary to meet market requirements, reasonably required reserve funds, capital issuance expenses, and other carrying costs during construction.

Federal credit instrument means a secured loan, loan guarantee, or line of credit authorized to be made available under this subchapter with respect to a project.

Investment-grade rating means a rating category of BBB minus, Baa3, or higher assigned by a rating agency to project obligations offered into the capital markets.

Lender means any non-Federal qualified institutional buyer (as defined in 17 CFR 230.144A(a)), known as Rule 144A(a) of the Securities and Exchange Commission and issued under the Securities Act of 1933 (15 U.S.C. 77a *et seq.*), including:

(1) A qualified retirement plan (as defined in section 4974(c) of the Internal Revenue Code of 1986, 26 U.S.C. 4974(c)) that is a qualified institutional buyer; and

(2) A governmental plan (as defined in section 414(d) of the Internal Revenue Code of 1986, 26 U.S.C. 414(d)) that is a qualified institutional buyer.

Line of credit means an agreement entered into by the Secretary with an obligor under section 184 of title 23 to provide a direct loan at a future date upon the occurrence of certain events.

Loan guarantee means any guarantee or other pledge by the Secretary to pay all or part of the principal of and interest on a loan or other debt obligation issued by an obligor and funded by a lender.

Local servicer means:

(1) A State infrastructure bank established under title 23; or

(2) A State or local government or any agency of a State or local government that is responsible for servicing a Federal credit instrument on behalf of the Secretary.

Obligor means a party primarily liable for payment of the principal of or interest on a Federal credit instrument, which party may be a corporation, partnership, joint venture, trust, or governmental entity, agency, or instrumentality.

Project means:

(1) Any surface transportation project eligible for Federal assistance under title 23 or chapter 53 of title 49;

(2) A project for an international bridge or tunnel for which an international entity authorized under Federal or State law is responsible;

(3) A project for intercity passenger bus or rail facilities and vehicles, including facilities and vehicles owned by the National Railroad Passenger Corporation, and components of magnetic levitation transportation systems; and

(4) A project for publicly owned intermodal surface freight transfer facilities, other than seaports and airports, if the facilities are located on or adjacent to National Highway System routes or connections to the National Highway System.

Project obligation means any note, bond, debenture, or other debt obligation issued by an obligor in connection with the financing of a project, other than a Federal credit instrument.

Project sponsor, for the purposes of this part, means an applicant for TIFIA assistance or an obligor, as appropriate.

Rating agency means a bond rating agency identified by the Securities and Exchange Commission as a Nationally Recognized Statistical Rating Organization.

Secured loan means a direct loan or other debt obligation issued by an obligor and funded by the Secretary in connection with the financing of a project under section 183 of title 23.

State means any one of the fifty states, the District of Columbia, or Puerto Rico.

Subsidy amount means the amount of budget authority sufficient to cover the estimated long-term cost to the Federal Government of a Federal credit instrument, calculated on a net present value basis, excluding administrative costs and any incidental effects on governmental receipts or outlays in accordance with the provisions of the Federal Credit Reform Act of 1990 (2 U.S.C. 661 *et seq.*).

Substantial completion means the opening of a project to vehicular or passenger traffic or a comparable event as determined by the Secretary and specified in the credit agreement.

Term sheet means a contractual agreement between the DOT and the project sponsor (and the lender, if applicable) that sets forth the key business terms and conditions of a Federal credit instrument. Execution of this document represents a legal obligation of budget authority.

TIFIA means the Transportation Infrastructure Finance and Innovation Act of 1998, Pub. L. 105–178, 112 Stat. 107, 241 (1998).

[64 FR 29750, June 2, 1999, as amended at 65 FR 44939, July 19, 2000]

§ 80.5 Limitations on assistance.

(a) The total amount of credit assistance offered to any project under this part shall not exceed 33 percent of the anticipated eligible project costs, as measured on an aggregate cash (year-of-expenditure) basis.

(b) Costs incurred prior to a project sponsor's submission of an application for credit assistance may be considered in calculating eligible project costs only upon approval of the Secretary. In addition, applicants shall not include application charges or any other expenses associated with the application process (such as charges associated with obtaining the required preliminary rating opinion letter) among the eligible project costs.

(c) No costs financed internally or with interim funding may be refinanced under this part later than a year following substantial completion of the project.

(d)(1) Within the overall credit assistance limitation of 33 percent of eligible project costs, the Secretary may consider making future-year or multi-year contingent commitments of budget authority and associated credit assistance for projects temporarily lacking certain requirements or with extended construction periods and financing needs. The TIFIA's effectiveness in stimulating private investment in transportation infrastructure depends, in large part, on investor recognition that TIFIA credit instruments represent solid and reliable Federal commitments. Therefore, the Secretary shall make any future-year or multi-year contingent commitment of funds for a project using a conditional term sheet. The conditional term sheet will resemble the standard term sheet that enables the obligation of budget authority, but will also specify the additional actions necessary to trigger subsequent obligation(s). The conditional term sheet will include fixed dates by

which any requirements must be met in order for the reserved funding to be obligated.

(2) Upon execution of the conditional term sheet, the Secretary shall reserve budget authority attributable to the appropriate year(s). This reservation will ensure that a project with a conditional commitment will have a priority claim (along with that of any other projects receiving such contingent commitments) on budget authority becoming available in the specified year(s), provided that the project sponsor satisfies each condition outlined in the conditional term sheet. The Secretary will limit such reservations to not more than 50 percent of the budget authority becoming available in the applicable year(s). If a multi-year contingent commitment is made, each year's loan will be tied to distinct, clearly identified project segments or stages or other milestones as specified in the credit agreement.

(e) The obligor may draw upon the line of credit only if net project revenues (including, among other sources, any debt service reserve fund) are insufficient to pay costs specified in 23 U.S.C. 184(a)(2) under the line of credit, including debt service costs. Debt service costs include direct payments of principal and interest as well as reimbursements for such payments in the form of legally required deposits to a debt service reserve fund.

(f) The Secretary shall not obligate funds in favor of a project that has not received an environmental Categorical Exclusion, Finding of No Significant Impact, or Record of Decision.

(g) The Secretary shall fund a secured loan based on the project's financing needs. The credit agreement shall include the anticipated schedule for such loan disbursements.

[64 FR 29750, June 2, 1999, as amended at 65 FR 44939, July 19, 2000]

§ 80.7 Application process.

(a) Public and private applicants for credit assistance under this part will be required to submit applications to the DOT in order to be considered for approval by the Secretary.

(b) At a minimum, such applications shall provide:

(1) Documentation sufficient to demonstrate that the project satisfies each of the threshold criteria in § 80.13 and describe the extent to which the project satisfies each of the selection criteria in § 80.15;

(2) Background information on the project for which assistance is sought, such as the project's description, status of environmental and other major governmental permits and approvals, and construction schedule;

(3) Background information on the applicant (project sponsor);

(4) Historical information, if applicable, concerning the applicant's financial condition, including, for example, independently audited financial statements and certifications concerning bankruptcies or delinquencies on other debt; and

(5) Current financial information concerning both the project and the applicant, such as sources and uses of funds for the project and a forecast of cash flows available to service all debt instruments.

(c) An application for a project located in or sponsored by more than one State or other entity shall be submitted to the DOT by just one State or entity. The sponsoring States or entities shall designate a single obligor for purposes of applying for, receiving, and repaying TIFIA credit assistance.

(d) Each fiscal year for which Federal assistance is available under this part, the DOT shall publish a FEDERAL REGISTER notice to solicit applications for credit assistance. Such notice will specify the relevant due dates, the estimated amount of funding available to support TIFIA credit instruments for the current and future fiscal years, contact name(s), and other details for that year's application submissions and funding approvals.

§ 80.9 Federal requirements.

All projects receiving credit assistance under this part shall comply with:

(a) The relevant requirements of title 23, U.S.C., for highway projects, chapter 53 of title 49, U.S.C., for transit projects, and section 5333(a) of title 49 for rail projects, as appropriate;

(b) Title VI of the Civil Rights Act of 1964 (42 U.S.C. 2000d *et seq.*);

(c) The National Environmental Policy Act of 1969 (42 U.S.C. 4321 *et seq.*);

(d) The Uniform Relocation Assistance and Real Property Acquisition Policies Act of 1970 (42 U.S.C. 4601 *et seq.*); and

(e) Other Federal and compliance requirements as may be applicable.

§ 80.11 Investment-grade ratings.

(a) At the time a project sponsor submits an application, the DOT shall require a preliminary rating opinion letter. This letter is a conditional credit assessment from a nationally recognized credit rating agency that provides a preliminary indication of the project's overall creditworthiness and that specifically addresses the potential of the project's senior debt obligations (those obligations having a lien senior to that of the TIFIA credit instrument on the pledged security) to achieve an investment-grade rating.

(b) The full funding of a secured (direct) loan, loan guarantee, or line of credit shall be contingent on the assignment of an investment-grade rating by a nationally recognized bond rating agency to all project obligations that have a lien senior to that of the Federal credit instrument on the pledged security.

(c) Neither the preliminary rating opinion letter nor the formal credit rating should reflect the effect of bond insurance, unless that insurance provides credit enhancement that secures the TIFIA obligation.

(d) The project sponsor must annually provide, at no cost to the Federal Government, ongoing credit evaluations of the project and related debt obligations, including an annual assessment of the TIFIA credit instrument. The evaluations are to be performed by a nationally recognized credit rating agency and provided to the DOT throughout the life of the TIFIA credit instrument. In addition, the project sponsor will furnish the DOT with any other credit surveillance reports on the TIFIA-assisted project as soon as they are available.

[64 FR 29750, June 2, 1999, as amended at 65 FR 44939, July 19, 2000]

§ 80.13 Threshold criteria.

(a) To be eligible to receive Federal credit assistance under this part, a project shall meet the following five threshold criteria:

(1) The project shall be consistent with the State transportation plan, if located in a metropolitan area shall be included in that area's metropolitan transportation plan, and shall appear in an approved State transportation improvement program before the DOT and the project sponsor execute a term sheet or credit agreement that results in the obligation of funds;

(2) The State, local servicer, or other entity undertaking the project shall submit a project application to the Secretary of Transportation;

(3) A project shall have eligible project costs that are reasonably anticipated to equal or exceed the lesser of $100 million or 50 percent of the amount of Federal-aid highway funds apportioned for the most recently completed fiscal year to the State in which the project is located (in the case of a project principally involving the installation of Intelligent Transportation Systems (ITS), eligible project costs shall be reasonably anticipated to equal or exceed $30 million);

(4) Project financing shall be repayable, in whole or in part, from tolls, user fees or other dedicated revenue sources; and

(5) In the case of a project that is undertaken by an entity that is not a State or local government or an agency or instrumentality of a State or local government, the project that the entity is undertaking shall be included in the State transportation plan and an approved State Transportation Improvement Program as provided in paragraph (a)(1) of this section.

(b) With respect to paragraph (a)(3) of this section, for a project located in more than one State, the minimum cost threshold size shall be the lesser of $100 million or 50 percent of the amount of Federal-aid highway funds apportioned for the most recently completed fiscal year to the participating State that receives the least amount of such funds.

(c) With respect to paragraph (a)(4) of this section, the Secretary may accept general obligation pledges or general

corporate promissory pledges and will determine the acceptability of other pledges and forms of collateral as dedicated revenue sources on a case-by-case basis. The Secretary shall not accept a pledge of Federal funds, regardless of source, as security for the TIFIA credit instrument.

§ 80.15 Selection criteria.

(a) The Secretary shall assign weights as indicated to the following eight selection criteria in evaluating and selecting among eligible projects to receive credit assistance:

(1) The extent to which the project is nationally or regionally significant, in terms of generating economic benefits, supporting international commerce, or otherwise enhancing the national transportation system (20 percent);

(2) The creditworthiness of the project, including a determination by the Secretary that any financing for the project has appropriate security features, such as a rate covenant, to ensure repayment (12.5 percent);

(3) The extent to which such assistance would foster innovative public-private partnerships and attract private debt or equity investment (20 percent);

(4) The likelihood that such assistance would enable the project to proceed at an earlier date than the project would otherwise be able to proceed (12.5 percent);

(5) The extent to which the project uses new technologies, including Intelligent Transportation Systems (ITS), that enhance the efficiency of the project (5 percent);

(6) The amount of budget authority required to fund the Federal credit instrument made available (5 percent);

(7) The extent to which the project helps maintain or protect the environment (20 percent); and

(8) The extent to which such assistance would reduce the contribution of Federal grant assistance to the project (5 percent).

(b) In addition, 23 U.S.C. 182(b)(2)(B) conditions a project's approval for credit assistance on receipt of a preliminary rating opinion letter indicating that the project's senior debt obligations have the potential to attain an investment-grade rating.

(c) The Secretary may also give preference to applications for loan guarantees rather than other forms of Federal credit assistance. This preference is consistent with Federal policy that, when Federal credit assistance is necessary to meet a Federal objective, loan guarantees should be favored over direct loans, unless attaining the Federal objective requires a subsidy, as defined by the Federal Credit Reform Act of 1990 (2 U.S.C. 661 *et seq.*), deeper than can be provided by a loan guarantee.

[64 FR 29750, June 2, 1999, as amended at 65 FR 44940, July 19, 2000]

§ 80.17 Fees.

(a) The DOT will require a non-refundable application fee for each project applying for credit assistance under the TIFIA. The DOT may also require an additional credit processing fee for projects selected to receive TIFIA assistance. Any required application initiation or credit processing fee must be paid by the project sponsor applying for TIFIA assistance and cannot be paid by another party on behalf of the project sponsor. The proceeds of any such fees will equal a portion of the costs to the Federal Government of soliciting and evaluating applications, selecting projects to receive assistance, and negotiating credit agreements. For FY 2000, the DOT will require payment of a fee of $5,000 for each project applying for credit assistance under the TIFIA, to be submitted concurrently with the formal application. The DOT will not impose any credit processing fees for FY 2000. For each application and approval cycle in FY 2001 and beyond, the DOT may adjust the amount of the application fee and will determine the appropriate amount of the credit processing fee based on program implementation experience. The DOT will publish these amounts in each FEDERAL REGISTER solicitation for applications.

(b) Applicants shall not include application initiation or credit processing fees or any other expenses associated with the application process (such as fees associated with obtaining the required preliminary rating opinion letter) among eligible project costs

for the purpose of calculating the maximum 33 percent credit amount referenced in § 80.5(a).

(c) If, in any given year, there is insufficient budget authority to fund the credit instrument for a qualified project that has been selected to receive assistance under TIFIA, the DOT and the approved applicant may agree upon a supplemental fee to be paid by or on behalf of the approved applicant at the time of execution of the term sheet to reduce the subsidy cost of that project. No such fee may be included among eligible project costs for the purpose of calculating the maximum 33 percent credit amount referenced in § 80.5(a).

(d) The DOT will require borrowers to pay servicing fees for each credit instrument approved for funding. Separate fees may apply for each type of credit instrument (*e.g.*, a loan guarantee, a secured loan with a single disbursement, a secured loan with multiple disbursements, or a line of credit), depending on the costs of servicing the credit instrument as determined by the Secretary. Such fees will be set at a level to enable the DOT to recover all or a portion of the costs to the Federal Government of TIFIA credit instruments.

[65 FR 44940, July 19, 2000]

§ 80.19 Reporting requirements.

At a minimum, any recipient of Federal credit assistance under this part shall submit an annual project performance report and audited financial statements to the DOT within no more than 180 days following the recipient's fiscal year-end for each year during which the recipient's obligation to the Federal Government remains in effect. The DOT may conduct periodic financial and compliance audits of the recipient of credit assistance, as determined necessary by the DOT. The specific credit agreement between the recipient of credit assistance and the DOT may contain additional reporting requirements.

[65 FR 44940, July 19, 2000]

§ 80.21 Use of administrative offset.

The DOT will not apply an administrative offset to recover any losses to the Federal Government resulting from project risk the DOT has assumed under a TIFIA credit instrument. The DOT may, however, use an administrative offset in cases of fraud, misrepresentation, false claims, or similar criminal acts or acts of malfeasance or wrongdoing.

[65 FR 44940, July 19, 2000]

PART 89—IMPLEMENTATION OF THE FEDERAL CLAIMS COLLECTION ACT

Subpart A—General

Sec.

89.1 Purpose.
89.3 Applicability.
89.5 Delegations of authority.
89.7 Exceptions to delegated authority.
89.9 Redelegation.
89.11 Standards for exercise of delegated authority.
89.13 Documentary evidence of compromise.
89.15 Regulations, reports, and supporting documentation.

Subpart B—Collection of Claims

89.21 Administrative collection.
89.23 Interest, late payment penalties, and collection charges.
89.25 Collection by administrative offset.
89.27 Referral for litigation.
89.29 Disclosure to commercial credit bureaus and consumer reporting agencies.
89.31 Use of professional debt collection agencies.
89.33 [Reserved]

Subpart C—Referral of Debts to IRS for Tax Refund Offset

89.37 Applicability and scope.
89.39 Administrative charges.
89.41 Notice requirement before offset.
89.43 Review within the Department.
89.45 Department determination.
89.47 Stay of offset.

AUTHORITY: Pub. L. 89–508; Pub. L. 89–365, secs. 3, 10, 11, 13(b), 31 U.S.C. 3701–3720A; Pub. L. 98–167; Pub. L. 98–369; Pub. L. 99–578; Pub. L. 101–552, 31 U.S.C. 3711(a)(2).

SOURCE: 53 FR 51238, Dec. 21, 1988, unless otherwise noted.

Subpart A—General

§ 89.1 Purpose.

This part implements the Federal Claims Collection Act of 1966, 31 U.S.C. 3701–3720 A, as amended primarily by the Debt Collection Act of 1982 (Pub. L.

97–365, 96 Stat. 1749) and the Debt Collection Amendments of 1986 (Pub. L. 99–578, 100 Stat. 3305). It supplements the Federal Claims Collection Standards (FCCS), 4 CFR parts 101–105, issued jointly by the Comptroller General of the United States and the Attorney General of the United States under 31 U.S.C. 3711(e)(2). Pursuant to the Federal Claims Collection Act, as amended, and the FCCS, this part sets forth procedures by which the Department of Transportation (DOT) and its operating elements (see 49 CFR 1.3) through designated officials:

(a) Collect claims owed to the United States arising from activities under its jurisdiction;

(b) Determine and collect interest and other charges on those claims;

(c) Compromise claims; and

(d) Refer unpaid claims for litigation.

§ 89.3 Applicability.

(a) The part applies to collection of all claims due the United States under the Federal Claims Collection Act of 1966 as amended by the Debt Collection Act of 1982 and the Debt Collection Amendments of 1986 (Pub. L. 99–578), arising from activities under the jurisdiction of DOT including amounts due the United States from fees, overpayments, fines, civil penalties, loans, damages, interest, and other sources.

(b) This part does not apply to collection, settlement or compromise of debts owed the United States pursuant to authority other than Title 31, Chapter 37, Subchapter II: for example, application of this part to the enforcement of contracts under 46 U.S.C. 1117, delegated to the DOT Maritime Administration, is not required.

(c) Section 89.23 (interest, late payment penalties, and collection charges) and § 89.25 (collection by administrative offset) of this part do not apply to debts which other United States government agencies or state governments or units of general local government owe the Department (see 31 U.S.C. 3701(c)); however, other statutory or common law may provide legal authority. Neither does the proposed rule apply to recovery of debts owed by current or former employees of the United States governed by 5 U.S.C. 5514.

(d) Claims arising out of contracts that contain specific provisions relating to claims are governed by those specific provisions to the extent that those provisions comply with existing law and with 4 CFR chapter II.

(e) As used in this part, the terms debt and claims are interchangeable and have the meaning defined in 4 CFR 101.2(a). A debtor's liability arising out of a particular incident or adjudication exclusive of interest, administrative costs, and late payment penalties, is a single claim.

(f) Except as provided in paragraphs (b), (c) and (d) of this section the provisions of this part shall apply to the collection of all debts and claims owed to any DOT operating element. A claim arising from the assessment of civil penalty or fine is not subject to the procedures of this subpart until the claim has been reduced to a liquidated debt by a signed settlement agreement, a court order or judgment, or a final administrative determination.

§ 89.5 Delegations of authority.

The functions, powers, and duties of the Secretary of Transportation to attempt collection of claims, to compromise claims of the United States not exceeding $100,000 (excluding interest) and to suspend and terminate action to collect such claims are delegated to:

(a) The Assistant Secretary for Administration with respect to claims arising out of the activities of, or referred to, the Office of the Secretary; and

(b) The heads of other DOT operating elements with respect to claims arising out of the activities of, or referred to, their organizations.

[53 FR 51238, Dec. 21, 1988, as amended at 58 FR 6898, Feb. 3, 1993]

§ 89.7 Exceptions to delegated authority.

The authority delegated under § 89.5 does not apply to any claim:

(a) As to which there is an indication of (1) fraud; (2) the presentation of a false claim; or (3) misrepresentation on the part of the debtor or any other party having an interest in the claim;

(b) Based on tax statutes; or

(c) Arising from an exception made by the General Accounting Office in the account of an accountable officer.

§ 89.9 Redelegation.

Each officer to whom authority is delegated under § 89.5 may redelegate and authorize successive redelegations of the authority within the organization under his or her jurisdiction.

§ 89.11 Standards for exercise of delegated authority.

The authority delegated under § 89.5 shall be exercised in accordance with the standards for the collection and compromise of claims and for the suspension and termination of action to collect claims promulgated by the United States General Accounting Office and the United States Department of Justice, and published at 4 CFR chapter II, as those standards may be amended.

§ 89.13 Documentary evidence of compromise.

A compromise of any claim is not final or binding on the United States unless it is in writing, signed by an officer or employee authorized to compromise that claim.

§ 89.15 Regulations, reports, and supporting documentation.

(a) Each officer to whom authority is delegated under § 89.5 may promulgate regulations for the exercise of that authority within his or her organization. These regulations shall be revised, as necessary, to conform to any amendments to this part.

(b) Each officer to whom authority is delegated under § 89.5 shall furnish the following information to the Assistant Secretary for Administration:

(1) A copy of each redelegation of that authority.

(2) A semiannual report listing those claims compromised or with respect to which collection action has been suspended or terminated, specifying the name of the debtors, the amount of the claim, the nature of the claim, the type of action taken, and the general basis for the action taken.

(3) A copy of any implementing regulations governing the exercise of the authority delegated under § 89.5, and any amendments to those regulations.

(c) Each officer or employee to whom the Secretary's authority has been delegated or redelegated, before exercising such authority, shall acquire sufficient documentation to demonstrate that the action taken is in the best interests of the United States. This documentation will be retained with and treated as part of the file concerning the debt.

(d) The failure of any officer or employee to comply with this section does not limit or impair his or her exercise of authority.

Subpart B—Collection of Claims

§ 89.21 Administrative collection.

Except as provided differently by the DOT operating elements pursuant to § 89.3:

(a) DOT shall send a debtor a total of three progressively stronger written demands at not more than 30-day intervals, unless a response to the first or second demand indicates that a further demand would be futile or the debtor's response does not require rebuttal, or other pertinent information indicates that additional written demands would be unnecessary.

(b) The initial written demand for payment (and the notice of offset under § 89.25) shall inform the debtor of:

(1) The basis for the indebtedness and the debtor's right to obtain review (see § 89.21(f) for details on review).

(2) The amount of the claim;

(3) That domestic and overseas payment in excess of ten thousand dollars or more shall be made by wire transfer through the Federal Reserve communications, commonly known as Fedwire, to the account of the U.S. Treasury in accordance with the instructions provided in the demand letter; payments originating in foreign countries shall be made by wire transfer to the extent practicable.

(4) The delinquency date, or the date by which payment is to be made (30 days from the date of mailing or hand delivery of the initial demand letter);

(5) The standard for interest, penalties, and administrative charges in accordance with 31 U.S.C. 3717, if payment is not received by the due date

(see § 89.23 for details regarding interest, collection charges, and late payment penalty charges);

(6) Where a notice of offset is concerned, the right to make voluntary payment before collection by offset begins (see § 89.25).

(7) The possible reporting of the claim to commercial credit bureaus and consumer reporting agencies; however a notice of offset should not include this warning.

(8) The possibility that DOT will forward the claim to a collection agency, the General Accounting Office, the Department of Justice, or private counsel contracting with the Department of Justice for collection; however a notice of offset should not include this warning.

(c) If the debtor fails to respond to the demands for payment by the due date specified in the notice, the Department may take further action under this part or the FCCS under 4 CFR parts 101 through 105, pursuant to 31 U.S.C. 3701–3720A. These actions may include reports to commercial credit bureaus, consumer reporting agencies, contracts with commercial collection agencies, revocation of licenses, or the use of administrative offset, as authorized in 31 U.S.C. 3701–3720A.

(d) DOT may collect by administrative offset, (see § 89.25, Collection by administrative offset), if the debtor:

(1) Has not made payment by the payment due date;

(2) Has not requested a review of the claim within the agency as set out in paragraph (f) of this section; or

(3) Has not made an arrangement for payment by the payment due date;

(e) Except for information that may properly be withheld under 49 CFR part 7, the debtor may inspect and copy the records of the agency related to the claim. Any reasonable costs associated with the copying and inspection of the records shall be borne by the debtor. (Payment of cost is governed by 49 CFR part 7, subpart I.) The debtor shall give reasonable notice in advance to the agency of the date on which it intends to inspect and copy the records involved;

(f)(1) Except for debts established by settlement agreement, court order or judgment, or final administrative decision, the debtor may request review of the validity or amount of a claim. To do so, the debtor shall make a request in writing for review of the claim prior to it becoming delinquent. (*See* 4 CFR 101.2 for definition of when a debt is considered delinquent.) The debtor's written response shall state the basis for the dispute, and provide all factual information, documents, citation to authority, argument and any other matters to be considered. If only part of the claim is disputed, the undisputed portion shall be paid by the delinquency date stated in the initial demand. During the period that the claim is being reviewed, the amount of the debt is owed, but the accrual of interest and accrual of time to delinquency may be suspended on the disputed portion of the debt.

(2) Review of claims shall be based upon the written record unless an oral hearing is required by 4 CFR 102.3(c). Upon completion of review, within 30 days whenever feasible, the Department shall advise the debtor whether the debt has been found to be valid in any amount, or that collection will be terminated. If the claim is found to be valid in any amount, the accrual of interest and time to delinquency shall commence 15 days after mailing of the notification of the review results. The notification of the review may also include notice of a specific collection action to be undertaken if payment is not received.

(g) The debtor may offer to make a written agreement to pay the amount of the claim. The acceptance of such an agreement is discretionary with DOT. If the debtor requests an installment payment arrangement because a lump sum payment would create a financial hardship, DOT may agree to a written installment payment schedule with the debtor (see 4 CFR 102.11(a)). The debtor shall execute a confess-judgment note which specifies all of the terms of the arrangement and includes a provision accelerating the debt in the event the debtor defaults. The size and frequency of installment payments shall bear a reasonable relation to the size of the debt and the debtor's ability to pay. Interest shall be provided in the note (see § 89.23). The debtor shall be provided

with a written explanation of the consequences of signing a confess-judgment note. The debtor shall sign a statement acknowledging receipt of the written explanation, which shall recite that the statement was read and understood before execution of the note and that the note is being signed knowingly and voluntarily. Evidence of these facts shall be maintained in DOT's file on the debtor in accordance with the practice of the DOT operating element.

§ 89.23 Interest, late payment penalties, and collection charges.

(a) DOT shall charge interest on an outstanding debt at the Treasury Current Value of Funds Rate published by the Secretary of the Treasury in accordance with 31 U.S.C. 3717 and 4 CFR 102.13(c), unless DOT determines that a higher rate is necessary to protect the interests of the United States. DOT shall charge a late payment penalty at a rate of six percent a year on any portion of a debt that is more than 90 days past due. DOT shall also assess administrative charges to cover additional cost incurred in processing and handling the debt beyond the payment due date. The imposition of interest, collection charges, and late payment penalty charges shall be made in accordance with 31 U.S.C. 3717, 4 CFR 102.13 (see § 89.3(c) regarding payment of such charges by Federal, state and local government agencies).

(b) Interest on debt shall begin to accrue on the date on which the debtor is mailed or delivered notice of the debt and the interest requirements or, in the case of advance billings, on the calendar day following the specified due date of the debt, provided the advance billing gives notice of the interest requirements for late payment. Interest on the debt shall continue to accrue until payment is received. Interest shall be calculated only on the principal of the debt (simple interest). The rate of interest assessed shall be the rate in effect on the date from which interest begins to accrue, and will remain fixed for the duration of the indebtedness. The rate of interest assessed will generally be the Treasury Current Value of Funds Rate.

(c) The Department shall waive interest on debt that is paid within 30 calendar days after the date on which interest began to accrue.

(d) Collection charges on debt shall be computed to cover the cost of processing and handling the delinquent debt. It shall be either the actual cost to process the particular delinquent debt to which it is applied, or operating elements may set the amount of such monthly charge by cost analysis establishing the average of actual additional costs incurred by the operating element in processing similar debts. Collection charges may also include the expense of obtaining credit reports and of using a professional debt collection contractor.

(e) DOT may waive interest, collection charges, or late payment penalty charges if it finds that:

(1) The debtor would be eligible for compromise under standards set forth in 4 CFR 103.2 with regard to the amount of the debt;

(2) Collection of interest, administrative charges, or penalties will jeopardize collection of the principal of the debt; or

(3) It is otherwise in the best interests of the United States, including the situation in which an offset or installment payment agreement is in effect.

§ 89.25 Collection by administrative offset.

(a) Whenever feasible, after a debtor fails to pay a claim, request a review of a claim, or make an arrangement for payment following a demand made in accordance with § 89.21, DOT shall collect claims under this part by means of administrative offset against obligations of the United States to the debtor pursuant to 31 U.S.C. 3716 and 4 CFR 102.3. Salary offset against present or former employees of the United States is not governed by this part (see 49 CFR part 92).

(b) The Department shall notify the debtor in writing in conformance with 31 U.S.C. 3716 and the FCCS of its intent to collect the debt by offset, unless the debtor pays the debt in full, including all interest, administrative charges, and penalties, or executes an agreement to pay the debt by installment at terms acceptable to DOT.

(c) In making collection by administrative offset under 31 U.S.C. 3716, DOT must do so in accordance with the requirements set forth in §89.21(b)(1–6). (See also procedures for recovery of debts to the United States by salary offset, 49 CFR part 92.)

§89.27 Referral for litigation.

Claims that are not settled or for which collection action is not compromised, suspended or terminated under 4 CFR parts 103 and 104 or collected by collection agencies shall be referred to the General Accounting Office or the Department of Justice for litigation in accordance with the procedures in 4 CFR part 105.

§89.29 Disclosure to commercial credit bureaus and consumer reporting agencies.

(a) Data on all delinquent commercial and consumer debts may be reported to commercial credit bureaus and consumer reporting agencies (see 31 U.S.C. 3701(a)(3)). Sixty days prior to release of information to a consumer reporting agency, the debtor shall be notified, in writing, of the intent to disclose the existence of the debt to a consumer reporting agency. Such notice of intent may be by separate correspondence or included in correspondence demanding direct payment. The notice shall be in conformance with 31 U.S.C. 3711(f) and the Federal Claims Collection Standards.

(b) The information that may be disclosed is the debtor's name, address, social security number or taxpayer identification number, and any other information to establish the identity and location of the individual, the amount of the claim, status and history of the claim, and the program under which the claim arose.

§89.31 Use of professional debt collection agencies.

Debts over 90 days delinquent (see §89.21(b)(4)) may be turned over to professional debt collection agencies except for those debts owed by State and local governments, other Federal agencies, current employees, and other debts prohibited by statute from being turned over to commercial collection agencies.

§89.33 [Reserved]

Subpart C—Referral of Debts to IRS for Tax Refund Offset

SOURCE: 54 FR 28681, July 7, 1989, unless otherwise noted.

§89.37 Applicability and scope.

(a) This subpart implements 31 U.S.C. 3720A which authorizes the IRS to reduce a tax refund by the amount of a past-due legally enforceable debt owed to the United States.

(b) For purposes of this subpart, a past-due legally enforceable debt referable to the IRS is:

(1) A debt which:

(i) Is owed to the United States;

(ii) Is at least $25.00;

(iii) Except in the case of a judgment debt, has been delinquent for at least three months but has not been delinquent for more than ten years at the time the offset is made;

(iv) Cannot be currently collected pursuant to the salary offset provisions of 5 U.S.C. 5514(a)(1);

(v) Is ineligible for administrative offset under 31 U.S.C. 3716(a) by reason of 31 U.S.C. 3716(c)(2) or cannot be collected by administrative offset under 31 U.S.C. 3716(a) by the Department against amounts payable to or on behalf of the debtor by or on behalf of the Department;

(vi) Has been disclosed by the Department to a consumer reporting agency as authorized by 31 U.S.C. 3711(f), unless a consumer reporting agency would be prohibited from using such information by 15 U.S.C. 1681c, or unless the amount of the debt does not exceed $100.00; and

(2) A debt for which the Department has:

(i) Notified or has made reasonable attempt to notify the taxpayer that the debt is past-due and, that the debt, unless repaid within 60 days thereafter, will be referred to the IRS for offset against any overpayment of tax;

(ii) Given the debtor at least 60 days from the date of notification to present information that all or part of the debt is not past-due or legally enforceable, has considered information presented by such debtor, and has determined

that an amount of debt is past-due and legally enforceable;

§ 89.39 Administrative charges.

In accordance with 4 CFR 102.13, all administrative charges incurred in connection with the referral of the debt to the IRS shall be added to the debt and thus increase the amount of the offset.

§ 89.41 Notice requirement before offset.

A request for offset from an IRS tax refund will be made only after the Department has made a determination that an amount is owed and past-due and provides the debtor with 60 days written notice. The Department's notice of intention to collect by IRS tax refund offset (Notice of Intent) includes:

(a) The amount of the debt;

(b) That unless the debt is repaid within 60 days from the date of the Department's Notice of Intent, the Department will refer the debt to the IRS for offset against any amount due the debtor as a tax refund;

(c) That the debtor has a right to present information that all or part of the debt is not past-due or legally enforceable; and

(d) A mailing address for forwarding any written correspondence and a contact name and telephone number for any questions.

§ 89.43 Review within the Department.

(a) *Notification by debtor.* A debtor who receives a Notice of Intent may present, for 60 days from the date of the Notice of Intent, information that all or part of the debt is not past-due or legally enforceable. (However, this does not extend the regulatory period for submitting written statements or for requesting an administrative hearing on the merits of an alleged violation, nor does it extend the period to appeal an assessed civil penalty.) To comply with this procedure, the debtor must:

(1) Send a written request for a review of the information to the address provided in the notice.

(2) State in the request the amount disputed and the reasons why the debtor believes that the debt is not past-due or legally enforceable.

(3) Include in the request any documents which the debtor wishes to be considered or state that additional information will be submitted within the remainder of the 60 day period.

(b) *Submission of information.* The debtor may submit information showing that all or part of the debt is not past-due or not legally enforceable along with the notification required by paragraph (a) of this section. Failure to submit the information within the remainder of the 60 day period will be interpreted as there is no additional information for consideration.

(c) *Review of the information.* The Department considers all available information related to the issue of whether the debt is past-due and the issue of whether the debt is legally enforceable. After a decision has been reached, the Department notifies the debtor whether the Department has sustained amended, or cancelled its determination that the debt is past-due and legally enforceable.

§ 89.45 Department determination.

(a) Following review of the information, the Department notifies the debtor with a written decision that includes the supporting rationale.

(b) If the Department either sustains or amends its determination, it shall notify the debtor that the debt is being referred to the IRS for offset against the debtor's Federal income tax refund. If the Department determines that there is no legally enforceable debt or that full payment has been made, the case will be closed.

§ 89.47 Stay of offset.

If the debtor timely notifies the Department that he or she is complying with the procedures in § 89.43(a) of this subpart and timely submits additional information in accordance with § 89.43(b) of this subpart, the debt will not be referred to the IRS while the matter is under review by the Department. Referral will not be made until the issuance of a written decision, in accordance with § 89.45 of this subpart, which sustains or amends the Department's original determination.

PART 91—INTERNATIONAL AIR TRANSPORTATION FAIR COMPETITIVE PRACTICES

Sec.
91.1 Purpose.
91.3 Investigations.
91.5 Findings and recommendations.
91.7 Determination of compensatory charges.
91.9 Distribution of compensatory funds.
91.11 Standards.
91.13 Refunds.

AUTHORITY: Secs. 2–3, 88 Stat. 2103, 49 U.S.C. 1159a and 1159b, Pub. L. 93–623.

SOURCE: 41 FR 54770, Dec. 15, 1976, unless otherwise noted.

§91.1 Purpose.

The purpose of this part is to prescribe the Secretary's role in executing his responsibilities under sections 2 and 3 of the International Air Transportation Fair Competitive Practices Act of 1974 to the end that U.S. flag air carriers operating in foreign air transportation are protected from all forms of discrimination or unfair competitive practices and are compensated for excessive or otherwise discriminatory charges levied by foreign governments or other foreign entities for the use of airport or airway property.

§91.3 Investigations.

The Assistant Secretary for Policy, Plans and International Affairs (Assistant Secretary), in coordination with the General Counsel and the Federal Aviation Administrator (Administrator), on complaint of any U.S. flag air carrier or on their own initiative, shall investigate: (a) Instances of alleged excessive or otherwise discriminatory user charges or (b) discriminatory or unfair competitive practices to which U.S. flag air carriers are subjected by a foreign government or other foreign entity. Excessive or otherwise discriminatory charges include, but are not limited to, unreasonable landing fees, unreasonable monopoly ground handling fees and unreasonable air navigation charges. Discriminatory or unfair competitive practices include, but are not limited to, unreasonably differentiated fuel allocations, cargo, charter or currency restrictions and inferior monopoly ground handling services.

§91.5 Findings and recommendations.

(a) Upon finding that a foreign government or entity imposes excessive or otherwise discriminatory charges against U.S. flag air carriers or causes such carriers to be subjected to discriminatory or unfair competitive practices, the Assistant Secretary, in coordination with the General Counsel and the Administrator, shall determine the extent of the discrimination or unfair competitive practices.

(b) Where the matter involves excessive or otherwise discriminatory charges, the Assistant Secretary shall prepare a report and recommend that the Secretary promptly submit a report of the case to the Secretary of State and the Civil Aeronautics Board in accordance with section 11 of the International Aviation Facilities Act, 49 U.S.C. 1159a.

(c) Where the matter involves discrimination or unfair competitive practices other than user charges, the Assistant Secretary shall prepare a report and recommend that the Secretary take such other action within the jurisdiction of the Department as is appropriate under the circumstances in accordance with 49 U.S.C. 1159b.

(d) If the Secretary determines, after review of the report and recommendations made under paragraph (b) of this section, that unreasonably excessive or otherwise discriminatory charges exist, the Secretary will submit a report on the matter to the Secretary of State and the Chairman of the Civil Aeronautics Board in accordance with 49 U.S.C. 1159a.

(e) If the Secretary determines, after review of the report and recommendations made under paragraph (c) of this section, that discriminatory or unfair competitive practices exist, the Secretary will commence all appropriate action within his jurisdiction in accordance with 49 U.S.C. 1159b.

§91.7 Determination of compensatory charges.

(a) Upon indication by the Secretary of State that the excessive or otherwise discriminatory user charges have not been reduced or eliminated, the

Secretary will direct the Assistant Secretary to compute the appropriate amount of compensatory charges.

(b) Upon approving the amount of compensatory charges computed under paragraph (a) of this section, the Secretary will notify the Secretary of State and the Secretary of the Treasury of his determination.

§ 91.9 Distribution of compensatory funds.

(a) On or after January 1 and July 1 of each year, each U.S. flag air carrier which has been subjected to excessive or otherwise discriminatory charges for which compensatory charges have been collected shall, upon compliance with paragraph (c) of this section, be entitled to pro rata reimbursement for excessive or otherwise discriminatory charges incurred to date, not to exceed the amount of such charges actually paid by that carrier.

(b) The Secretary will publish in the FEDERAL REGISTER, at least 30 days before a U.S. flag air carrier becomes entitled to reimbursement, a notice setting forth the procedures to be followed in making claims for reimbursement. This notice will specify the form in which application shall be made and the specific items of proof, if any, to be submitted.

(c) On or after January 1 and July 1 of each year, each U.S. flag carrier claiming a right to reimbursement shall apply for such reimbursement in accordance with the FEDERAL REGISTER notice referred to in paragraph (b) of this section.

(d) The Assistant Secretary shall, on the basis of the application and such other data as may be available, compute the amount to which such carrier is entitled.

(e) Subject to the provisions of §91.13(b), upon approving the computation made by the Assistant Secretary, the Secretary shall issue such certificate as will entitle each such carrier to payment from the account maintained by the Secretary of the Treasury for this purpose.

§ 91.11 Standards.

(a) To minimize the burden of implementing this part on the United States, on U.S. flag air carriers and on foreign air carriers, estimates and periodic adjustments will be used to determine the amount of discrimination and compensatory charges therefor.

(b) For the purpose of determining the amount of excessive or otherwise discriminatory charges imposed upon U.S. flag air carriers by an entity:

(1) A service or use of airport or airway property includes, but is not limited to, fueling, food service, ticketing, baggage handling, runways, ramps, parking areas, navigational aids, communications facilities or any other service necessary and incidental to the conduct of a flight.

(2) An excessive or otherwise discriminatory charge includes, but is not limited to, a charge substantially above the cost of providing a service or any charge for a service that is substantially inferior to that which the U.S. flag air carrier could have provided for itself, at the same cost, by contract or otherwise (*see also* §91.3).

(c) In determining the amount of compensatory charge:

(1) The total amount of excessive or otherwise discriminatory charges levied against U.S. flag air carriers will be estimated in dollars.

(2) The total volume of operations to the United States by air carriers of the nation concerned will be estimated for the succeeding six-month period.

(3) The total amount of excessive or otherwise discriminatory charges in paragraph (c)(1) of this section will be divided by the total volume of operations in paragraph (c)(2) of this section, and

(4) The quotient thus computed (which may be adjusted to reflect the type of aircraft) will constitute the compensatory charge to be collected as a condition to acceptance of the general declaration at the time of landing or takeoff of such air carriers of the nation concerned.

§ 91.13 Refunds.

(a) Where, in his discretion, the Secretary finds that good cause has been shown, the Secretary may authorize a refund of collected compensatory charges. For purposes of this section, good cause includes, but is not limited to, an error of fact, a miscalculation, or a determination that an original

conclusion of entitlement was insufficient, invalid, erroneous or invalidated by subsequent events.

(b) Notwithstanding the provisions of § 91.9(e) the Secretary may suspend for a reasonable time the issuance of a certificate of entitlement upon a showing by a payor of compensatory charges that there is a substantial likelihood that the payor will make a showing of good cause under § 91.13(a).

(c) Notwithstanding the provisions of paragraphs (a) and (b) of this section, the issuance of a certificate of entitlement under § 91.9(e) or the distribution to U.S. flag air carriers of funds collected under this part shall be with prejudice to any claim for refund under this section.

PART 92—RECOVERING DEBTS TO THE UNITED STATES BY SALARY OFFSET

Sec.

92.1 Purpose.
92.3 Scope.
92.5 Definitions.
92.7 Notice, hearing, written response and decision.
92.9 Exceptions to notice, hearing, written response, and final decision.
92.11 Demand for payment.
92.13 Request for hearing.
92.15 Request for hearing after time expires.
92.17 Form of hearings and written decisions.
92.19 Obtaining the services of a hearing official.
92.21 Deduction from pay.
92.23 Collection.
92.25 Source of deductions.
92.27 Duration of deductions.
92.29 Limitation on amount of deductions.
92.31 Liquidation from final payment.
92.33 Recovery from other payments due a separated employee.
92.35 Interest, penalties and administrative costs.
92.37 Non-waiver of rights by payment.
92.39 Refunds.
92.41 Requesting recovery when the Department is not the paying agency.
92.43 Requests for recovery when the Department is the paying agency.
92.45 Other debt collections.

AUTHORITY: 5 U.S.C. 5514, as amended; 5 CFR part 550, subpart K; 4 CFR parts 101–105.

SOURCE: 53 FR 4171, Feb. 12, 1988, unless otherwise noted.

§ 92.1 Purpose.

This part implements 5 U.S.C. 5514 (Installment Deduction for Indebtedness to the United States), as amended by the Debt Collection Act of 1982 (Pub. L. 97–365, 96 Stat. 1749, 1751). It supplements 5 CFR part 550, subpart K, and the Federal Claims Collections Standards (4 CFR parts 101–105) issued jointly by the Comptroller General of the United States and the Attorney General of the United States under 31 U.S.C. 3711(e)(2). It sets forth the procedures by which the Department of Transportation (DOT), including its operating elements (see 49 CFR 1.3):

(a) Collects debts owed to the United States by current and former DOT employees;

(b) Determines and collects interest and other charges on that indebtedness.

(c) Offsets the salary of DOT employees to collect debts owed to the United States by those employees; and,

(d) Obtains salary offset to collect debts owed to the United States by employees of other agencies under programs administered by DOT.

§ 92.3 Scope.

The provisions of this part are applicable to the indebtedness of a current or former employee of DOT incurred under any program administered by DOT. The provisions of this part do not apply to the collection of indebtedness by authority other than 5 U.S.C. 5514.

§ 92.5 Definitions.

As used in this part:

(a) *Agency* means an Executive Agency as defined by section 105 of title 5, United States Code, the U.S. Postal Service, the U.S. Postal Rate Commission, a Military Department as defined by section 102 of title 5, United States Code, an agency or court in the judicial branch, an agency of the legislative branch, and any other independent establishments which are entities of the Federal Government. In DOT each operating element will act for the agency in collecting debts under this rule.

(b) *Creditor agency* means the agency to which the debt is owed.

(c) *Debt* means an amount owed to the United States from sources which include, but are not necessarily limited

to, erronerous payments made to employees, overpayments of benefits, salary or other allowances, loans insured or guaranteed by the United States and all other amounts due the United States from fees, leases, rents, royalties, services, sales of real or personal property, overpayments, penalties, damages, interest, fines and forfeitures (except those arising under the Uniform Code of Military Justice) and all other similar sources. This term does not include a Government claim arising under the Internal Revenue Code of 1954 (26 U.S.C. 1–9602) as amended; the Social Security Act (42 U.S.C. 301–1397f); the tariff laws of the United States; or any case where collection of a debt by salary offset is explicitly provided for or prohibited by another statute (e.g., emergency and travel advances under 5 U.S.C. 5522, 5705 or 5724 and employee training expenses under 5 U.S.C. 4108).

(d) *Debt Claim Form* means the form used by DOT when requesting that an agency, other than DOT, assist in the recovery of funds.

(e) *Delinquent debt* means a debt which has not been paid by the date specified in the agency's initial written notification or applicable contractual agreement, unless other satisfactory payment arrangements have been made by that date, or if, at any time thereafter, the debtor fails to satisfy obligations under a payment agreement with the creditor agency.

(f) *Disposable pay* means that part of current basic pay, special pay, incentive pay, retired pay, retainer pay, or in the case of an employee not entitled to basic pay, other authorized pay remaining after the deduction of any amount required by law to be withheld. (See 5 CFR 581.105 (b) through (f) for items required by law to be withheld, and therefore excluded from disposable pay for the purposes of this regulation).

(g) *DOT operating element* (see 49 CFR 1.3) means a DOT Operating Administration including—

(1) U.S. Coast Guard.

(2) Federal Aviation Administration.

(3) Federal Highway Administration.

(4) Federal Railroad Administration.

(5) National Highway Traffic Safety Administration.

(6) Urban Mass Transportation Administration.

(7) St. Lawrence Seaway Development Corporation.

(8) Maritime Administration.

(9) Research and Special Program Administration.

(10) The Office of the Secretary.

(h) *Employee* means a current or former employee of a Federal agency, including a member of the Armed Forces (including retired members) or a Reserve of the Armed Forces (Reserves). However, employees paid from non-appropriated funds are not included.

(i) *FCCS* means the Federal Claims Collection Standards, 4 CFR Ch. II, jointly published by the Department of Justice and the General Accounting Office.

(j) *Hearing* means an informal conference before a hearing official in which the employee and the DOT operating element are given an opportunity to present evidence, witnesses, and argument. The hearing official shall be either an administrative law judge or an individual not under the supervision or control of the Department.

(k) *Paying agency* means the agency authorizing the payment of the employee's current pay.

(l) *Salary offset* means an administrative offset to collect a debt under 5 U.S.C. 5514 by deduction(s) at one or more officially established pay intervals from the current pay account of a present or former employee with or without his or her consent. It includes a single offset from the final salary of an employee whose employment ends.

(m) *Waiver* means the cancellation, remission, forgiveness or non-recovery of a debt allegedly owed by an employee to an agency as permitted or required by 5 U.S.C. 5584, 5 U.S.C. 8346(b), 10 U.S.C. 2774, or 32 U.S.C. 716, or any other law.

§ 92.7 Notice, hearing, written response and decision.

(a) Except as provided in § 92.9 of this part, each employee from whom the department proposes to offset a debt against the Federal pay of an employee who is indebted to the United States under a program administrated by DOT under these regulations is entitled to

receive a minimum of 30 days written notice as described in § 92.11 of this part (see also § 92.21(a)).

(b) Each employee owing a debt to the United States which will be collected by salary offset is entitled to petition for a hearing before collection starts. This petition shall be filed directly with the accounting or finance office of the DOT creditor operating element which shall make appropriate hearing arrangements consistent with law and regulations. The DOT creditor operating element shall provide an explanation of the rights of the employee. If a hearing is provided, the following issues shall be heard:

(1) The determination of the DOT creditor operating element concerning the existence and amount of the debt; and

(2) The terms of the repayment schedule, if not previously established by written agreement between the employee and the DOT creditor operating element. (See § 92.21(c) regarding copy of written decision by hearing officer describing method and amount of salary offset).

§ 92.9 Exceptions to notice, hearing, written response, and final decision.

(a) *Exceptions.* The procedural requirements of 5 U.S.C. 5514 do not apply to recovery by way of retroactive deductions for administrative adjustments associated with the Federal benefits program. In such cases the content of the notification to employees is stated in § 92.9(b).

(b) *Simplified procedures to be followed.* In the event that a retroactive deduction from pay or allowances is required to recover an insufficiency of deductions arising through normal processing delays, and those insufficient deductions did not occur in more than four pay periods, rather than following the specific procedures required by 5 U.S.C. 5514(a)(2), and set forth in § 92.11 through § 92.17 of this part, the DOT creditor operating element shall issue in advance of the collection a simplified notice to the employee that:

(1) Because of the employee's election for changes in voluntary payroll deduction, corresponding deductions shall be imposed on the employee's salary to cover the period between the effective date of the election and the first regular withholding. The employee may dispute the amount of the retroactive collection by notifying his or her accounting or finance officer; or

(2) Due to a normal ministerial adjustment in pay or allowances which could not be placed into effect immediately, future pay will be reduced to permit the DOT creditor operating element to recover any excess pay or allowances received by the employee. The employee may dispute the amount of the retroactive collection by notifying his or her accounting or finance officer.

(c) *Limitation on exceptions.* The exceptions described in paragraph (a) of this section shall not include a recovery required to be made for any reason other than routine processing delays in putting the change into effect, even if the period of time for which the amounts must be retroactively recovered is less than four pay periods. If normal processing delays exceed four pay periods, then the full procedures prescribed under 5 U.S.C. 5514 and §§ 92.11 through 92.17 of this part will be extended to the employee.

[53 FR 4171, Feb. 12, 1988, as amended at 53 FR 51279, Dec. 21, 1988]

§ 92.11 Demand for payment.

(a) The DOT creditor operating element shall send a debtor a total of three progressively stronger written demands at not more than 30-day intervals, unless a response to the first or second demand indicates that a further demand would be futile and the debtor's response does not require rebuttal (see also § 92.21(a)). Other information may also indicate that additional written demands are unnecessary.

(b) The initial written demand for payment shall inform the debtor of:

(1) The basis for the indebtedness;

(2) The amount of the claim;

(3) The date by which payment is to be made:

(4) The debtor's liability for interest, penalties and administrative charges in accordance with 31 U.S.C. 3717 and § 92.35 of this part, if payment is not received within 30 days of the due date

(see § 92.35 for details regarding interest, penalties and administrative costs);

(5) The intent of the agency to collect by salary offset, including asking the assistance of other Federal agencies to help in the offset whenever possible, if the debtor:

(i) Has not made payment by the payment due date;

(ii) Has not requested a review of the claim within the agency as set out in paragraph (b)(8) of this section; or

(iii) Has not made an arrangement for payment by the payment due date:

(6) The possible submission of claims to a collection agency or referral to the General Accounting Office or the Department of Justice for litigation in accordance with the procedures in 4 CFR part 105.

(7) The right of the debtor to inspect and copy the records of the agency related to the claim. Any reasonable costs associated with the inspection and copying of these records shall be borne by the debtor. The debtor shall give reasonable notice in advance to the agency of the date upon which he or she intends to inspect and copy the records involved.

(8) The right of the debtor to a review of the claim within the agency. If the claim is disputed in full or in part, the debtor shall respond to the demand by making a request in writing for a review of the claim within the agency by the payment due date stated in the demand. The debtor's written response shall state the basis for the dispute. If only part of the claim is disputed, the undisputed portion shall be paid by the due date. The DOT creditor operating element shall acknowledge receipt of the request for a review, and upon completion of consideration shall notify the debtor whether its determination has been sustained, amended, or canceled within 15 days of the receipt of the request for a review. If the DOT operating element either sustains or amends its determination, it shall notify the debtor of its intent to collect by salary offset unless payment is received within 15 days of the mailing of the notification of its decision following a review of the claim.

(9) The right of the debtor to offer to make a written agreement to repay the amount of the claim (see § 92.23). The acceptance of such an agreement is discretionary with the agency. If the debtor requests a repayment arrangement because a payment of the amount due would create a financial hardship, the DOT creditor operating element will analyze the debtor's financial condition. Depending on its evaluation of the financial strength of the debtor, the DOT operating element may agree to a written installment repayment schedule with the debtor. The debtor shall execute a confession of judgment note which specifies all of the terms of the arrangement. The size and frequency of installment payments should bear a reasonable relation to the size of the debt and the debtor's ability to pay. Interest, penalties and administrative charges shall be provided in the note (see § 92.35). The debtor shall be provided with a written explanation of the consequences of signing a confession of judgment note. The debtor shall sign a statement acknowledging receipt of the written explanation which shall recite that the statement was read and understood before execution of the note and that the note is being signed knowingly and voluntarily. Some form of evidence of these facts shall be maintained in the agency's file on the debtor.

(10) The right to an oral hearing or a hearing based on written submissions conducted by an administrative law judge or by a hearing official not under the control of the head of the Department in accordance with § 92.13 of this part.

(11) The consequences of any knowingly false statements, representations, or evidence provided by the employee, which may include:

(i) Disciplinary procedures under 5 U.S.C. chapter 75, 5 CFR part 752, or any other applicable statutes or regulations;

(ii) Criminal penalties under 18 U.S.C. 286, 287, 1001 and 1002, or any other applicable statute; or,

(iii) Penalties under the False Claims Act, 31 U.S.C. 3729, *et seq.*, or any other applicable statute.

(12) Proceedings under any other statutory authority for the collection of claims of the DOT operating element.

(13) The fact that amounts paid on or deducted from the debt which are later waived or found not owed to the United States will be promptly refunded to the employee unless there are applicable contractual or statutory provisions to the contrary.

(14) The name, address, and telephone number of the accounting or finance officer who may be contacted if the employee wishes to review the records or to obtain information.

§ 92.13 Request for hearing.

(a) The employee shall be advised in the notification that a hearing may be requested by filing a written petition within 15 calendar days of receipt of the notification, addressed to the chief of the paying agency's accounting or finance office.

(b) The petition shall state the grounds upon which the employee disputes the proposed collection of the alleged debt. The petition shall identify and explain with reasonable specificity the facts, evidence which, and witnesses who the employee believes support his or her position.

(c) The timely filing of a petition for hearing shall stay any further collection proceedings. A decision by the administrative law judge or other hearing official (see §92.5(j)) will be issued at the earliest practical date, but no later than 60 days after the filing of a petition for hearing, unless a delay is granted at the request of the employee.

§ 92.15 Request for hearing after time expires.

The Department may accept late requests for a hearing if the employee can show that delay in requesting a hearing beyond the period provided in the notice described in §92.11 of this part was caused by circumstances beyond his or her control or because of failure to receive notice of the time limit (unless he or she was otherwise aware of it) or because of new information.

§ 92.17 Form of hearings and written decisions.

(a) Hearings shall consist of informal conferences before an administrative law judge or other hearing official (see §92.5(j)) in which the employee and the DOT creditor operating element are given full opportunity to present evidence, witnesses, and argument. The DOT operating element will maintain a summary record of a hearing provided under these procedures.

(b) Written decisions provided after a request for hearing shall, at a minimum, summarize the evidence alleged to substantiate the nature and origin of the alleged debt; the administrative law judge's or other hearing official's analysis, findings, and conclusions; the amount and validity of the alleged debt; and, where applicable, the repayment schedule.

(c) A copy of the administrative law judge's or other hearing official's final decision shall be provided to the employee as well as the chief of the office authorized to collect debts by deduction from salary.

(d) The decision of the administrative law judge or other hearing official shall be final and binding on the parties.

§ 92.19 Obtaining the services of a hearing official.

(a) Where a DOT operating element is the creditor agency, the chief of the appropriate accounting or finance office shall schedule a hearing before an administrative law judge or other hearing official.

(b) If another (non-DOT) agency is the creditor agency, then it is the responsibility of that agency to arrange for a hearing if one is requested.

(c) Agents for the paying agency are designated in appendix A to 5 CFR part 581. (This appendix lists the agents designated to accept legal process for the executive branch, the U.S. Postal Service, the Postal Rate Commission, the District of Columbia, American Samoa, Guam, the Virgin Islands, and the Smithsonian Institution.)

§ 92.21 Deduction from pay.

(a) After other, less severe collection actions have failed, the DOT operating element (see §92.5(g)) may implement steps to obtain collection by salary offset. The method and the amount of the salary offset shall be the method and amount stated in the creditor agency's demand letter (see §92.11) or notice (see §92.7), or, if applicable, in the decision

of an administrative law judge or other hearing official after an employee-requested hearing on the matter. If a DOT operating element is the creditor, the procedures stated in §92.11 shall be followed.

(b) Before a collection by salary offset may be made, the chief of the accounting or finance office of the paying DOT operating element shall be furnished with certified documentation by the creditor agency indicating that the creditor agency has sent the employee a demand letter pursuant to §92.11 of this part stating as a minimum:

(1) The nature and amount of the indebtedness and the intention of the agency to initiate, at the expiration of thirty days, a proceeding to collect the debt by salary offset; and an explanation of the rights of the employee under this subsection;

(2) That the employee has the opportunity to inspect and copy Government records relating to the debt;

(3) That the employee has an opportunity to enter into a written agreement with the agency to establish a schedule for the repayment of the debt;

(4) That the employee has an opportunity for a hearing on the determination of the agency concerning the existence or the amount of the debt, and in the case of an individual whose repayment schedule is established other than by a written agreement as described in paragraph (b)(3) of this section concerning the terms of the repayment schedule; and

(5) That the creditor agency's regulations implementing 5 U.S.C. 5514 have been approved by OPM (see 5 CFR 550.1108(a)).

(c) Where a hearing has been held, a copy of the decision of the administrative law judge or other hearing official must be furnished to the chief of the accounting or finance office of the paying DOT operating element before collection of the indebtedness by salary offset may be initiated. The method and amount of the offset will be as stated in the decision.

§92.23 Collection.

(a) A debt shall be collected in a lump sum or by installment deductions at officially established pay intervals from an employee's current pay account, unless the employee and the DOT operating element agree to alternative arrangements for payment (see §92.11(b)(9) describing such voluntary repayment arrangements). The alternative arrangement shall be in writing, signed by both the employee and the chief of the appropriate accounting or finance office, and shall be documented in the DOT operating element's files.

(b) Under 31 U.S.C. 3716 and 4 CFR 102.3(b)(3), agencies may not initiate offset to collect a debt more than 10 years after the Government's right to collect the debt accrued, unless facts material to the Government's rights to collect the debt were not known by the DOT operating element's official or officials charged with the responsibility to discover and collect the debt.

§92.25 Source of deductions.

Except as provided in §92.31 and §92.33 of this part (with respect to separated employees), the paying DOT operating element will make deductions only from disposable pay (see §92.5(f)).

§92.27 Duration of deductions.

Debts shall be collected in one lump sum where possible. However, if the employee is financially unable to pay in one lump sum or the amount of the debt exceeds 15 percent of disposable pay payable in one pay period, collection will be made in installments. Such installment deductions will be made over a period not greater than the anticipated period of employment or active duty, as the case may be, except as provided in §§92.29, 92.31, and 92.33 of this part.

§92.29 Limitation on amount of deductions.

The size and frequency of installment deductions shall bear a reasonable relation to the size of the debt and the employee's ability to pay. However, the amount deducted for any period may not exceed 15 percent of the disposable pay from which the deduction is made, unless the employee has agreed in writing to the deduction of a greater amount.

§ 92.31 Liquidation from final payment.

If the employee retires, resigns his or her employment, is terminated, or the employment or period of active duty ends before collection of the debt is completed, there shall be an offset from subsequent payments of any nature (e.g., final salary, lump sum leave, etc.) due the employee from the DOT operating element on the date of separation to the extent necessary to liquidate the debt.

§ 92.33 Recovery from other payments due a separated employee.

If the debt cannot be liquidated by offset from any final payment due the employee as of the date of separation, the DOT operating element shall liquidate the debt by administrative offset pursuant to 31 U.S.C. 3716 from later payments of any kind due the former employee from the United States, where appropriate (see § 92.41(b)(2)(ii)).

§ 92.35 Interest, penalties and administrative costs.

(a) Where a DOT creditor operating element (see § 92.5(g)) is the creditor, it shall charge interest on an outstanding debt at the rate published by the Secretary of the Treasury in accordance with 31 U.S.C. 3717. The rate of interest assessed shall be the rate of the current value of funds to the United States Treasury (i.e., the Treasury tax and loan account rate), as prescribed and published by the Secretary of the Treasury in the FEDERAL REGISTER and the Treasury Financial Manual Bulletins annually or quarterly, in accordance with 31 U.S.C. 3717. The DOT creditor operating element shall charge a penalty of six percent a year, in addition to interest, on any portion of a debt that is more than 90 days past due. It shall assess administrative charges to cover additional costs incurred in processing and handling the debt beyond the payment due date. The imposition of interest, penalties and administrative charges is made in accordance with 31 U.S.C. 3717 and 4 CFR 102.13.

(b) Interest on debt shall begin to accrue on the date on which the debtor is first sent or delivered notice of the debt and of the interest requirements or, in the case of advance billings, on the calendar date following the specified due date of the debt provided the advance billing gives notice of the interest requirements for late payment. Interest on the debt shall continue to accrue until payment is received. Interest shall be calculated only on the principal of the debt (simple interest). The rate of interest charged shall be the rate in effect on the date from which interest begins to accrue, and shall remain fixed for the duration of the indebtedness.

(c) A DOT creditor operating element shall waive the monthly interest on debt that is paid within 30 calendar days after the date on which interest began to accrue.

(d) A DOT creditor operating element may waive interest, penalties and/or administrative charges if it finds that:

(1) The debtor is unable to pay any significant sum toward the claim within a reasonable period of time;

(2) Collection of interest, penalties or administrative charges will jeopardize collection of the principal of the debt; or

(3) It is otherwise in the best interest of the United States, including the situation where an offset or installment payment agreement is in effect.

§ 92.37 Non-waiver of rights by payment.

An employee's payment or agreement to pay, whether voluntary or involuntary, of all or any portion of an alleged debt being collected pursuant to these procedures shall not be construed as a waiver of any rights which the employee may have under this part to the extent of such payment or agreement.

§ 92.39 Refunds.

(a) Amounts paid or deducted from the account of a current or former employee of the United States Government, pursuant to this part, for a debt which is found not owing to the United States shall be promptly refunded to the employee.

(b) Amounts which are waived shall, after proper application, be promptly returned after approval of the application.

§ 92.41 Requesting recovery when the Department is not the paying agency.

(a) *Format of the request for recovery.* (1) Where the DOT operating element is the creditor agency and another agency is the paying agency, the chief of the accounting of finance office of the appropriate DOT operating element (see § 92.5(g)) shall complete and certify the ''Debt Claim Form'' (see Attachment 1), and attach a copy of the demand letter sent to the employee pursuant to § 92.11 with a statement of the employee's response thereto, or, if a hearing was held pursuant to § 92.13, attach a copy of the decision of the administrative law judge or other hearing official. The DOT creditor operating element shall certify that the employee owes the debt, the amount and basis of the debt, the date on which payment is due, the date the Government's right to collect the debt accrued, and that the Departmental regulations implementing 5 U.S.C. 5514 have been approved by the Office of Personnel Management.

(2) If the collection is to be made in voluntary or involuntary installments (see Attachment 1), the DOT creditor operating element shall also advise the paying agency of the amount of the installments and, if a date for the beginning of payments other than the next officially established pay period is required, the date of the first installment.

(3) Unless the employee has voluntarily agreed to the salary offset in writing or, in the absence of such agreement, has signed a statement acknowledging receipt of the procedures required by 5 U.S.C. 5514(a)(2) and the writing or statement is attached to the debt claim form, the DOT creditor operating element shall also indicate the action(s) taken under 5 U.S.C. 5514 and give the date(s) the action(s) were taken.

(b) *Submitting the request for recovery*—(1) *Current employees.* The DOT creditor operating element shall submit the ''Debt Claim Form'' (Attachment 1) to the employee's paying agency.

(2) *Employees who are separating or have separated*—(i) *Employees who are in the processs of separating.* If the employee is in the process of separating, the DOT creditor operating element shall submit its debt claim (Attachment 1) to the employee's paying agency for collection as provided in § 92.31 of this part. The paying agency is required to certify the total amount of its collection made or to be made prior to separation and notify the DOT creditor operating element and the employee as provided in § 92.41 (b)(2)(iii). If the paying agency is aware that the employee is entitled to payments from the Civil Service Retirement and Disability Fund, or other similar payments, it shall advise the DOT operating element and send a copy of the debt claim and certification to the agency responsible for making such payments as notice that a debt is outstanding.

(ii) *Employees who have already separated.* If the employee has already separated and all payments due from his or her former paying agency have been paid, the DOT operating element may request, unless otherwise prohibited for example by court order, that monies which are due and payable to the employee from the Civil Service Retirement and Disability Fund (5 CFR 831.1801 et seq.) or other similar funds, be administratively offset in order to collect the debt (see 31 U.S.C. 3716 and the FCCS).

(iii) *Employees who transfer from one paying agency to another.* If, after the DOT creditor operating element has submitted the debt claim to the employee's paying agency, the employee transfers to a position served by a different paying agency before the debt is collected in full, the paying agency from which the employee separates shall certify the total amount of the collection made on the debt. One copy of the certification shall be furnished to the employee and another to the DOT operating element along with notice of the employee's transfer. The original of the debt claim form shall be inserted in the employee's official personnel folder along with a copy of the certification of the amount which has been collected. Upon receiving the official personnel folder, the new paying agency shall, in accordnce with the DOT operating element's properly certified claim, resume the collection

from the employee's current pay account and notify the employee and the DOT creditor operating element of the resumption. The DOT operating element is not required to repeat the required collection procedures from the beginning in order to resume the collection. However, it shall be the responsibility of the DOT creditor operating element to review the debt upon receiving the former paying agency's notice of the employee's transfer to make sure the collection is resumed by the new paying agency.

§ 92.43 Requests for recovery when the Department is the paying agency.

(a) *Incomplete request for recovery.* If the request for recovery received by the chief of the accounting or finance office of the appropriate DOT operating element is incomplete in any respect (see § 92.21(b)) including, but not limited to, the failure to certify in writing that the employee owes the debt, the amount and basis of the debt, the date on which payment(s) is due, the date the creditor agency's right to collect the debt first accrued, and that the creditor agency's regulations implementing 5 U.S.C. 5514 were approved by OPM, the request shall be returned to the creditor agency with a statement of the deficiency. No action to implement salary offset may be initiated until a complete request has been received.

(b) *Complete request for recovery.* If a complete request for recovery is received by the chief of the accounting or finance office of the appropriate DOT operating element, a copy of the request and any supporting documentation shall be transmitted to the appropriate payroll office, and deductions shall be scheduled to begin at the next officially established pay interval. A copy of the request and any supporting documentation shall be provided to the debtor, along with a notice of the date deductions will begin.

(c) The DOT operating element may not review the merits of the creditor agency's determination with respect to the amount or validity of the debt as stated in the request for recovery.

§ 92.45 Other debt collections.

Separate rules exist for general collection of debts owed the United States under 31 U.S.C. 3711, 3716–18; 4 CFR Ch. II.

Attachment 1

DEBT CLAIM FORM

1. Paying agency identification	2. Employee identification
a. Name	a. Name
b. Address	b. Address
	c. DOB d. SSN

To liquidate a debt to the United States, the named creditor agency asks that the debt be collected as shown from the current pay of the employee identified above. Notices and inquiries concerning the debt should be sent to the address shown below.

3. Debt information

a. Reason for debt:			
b. Date right to collect accrued	c. Debt identification number, if any		
d. Original debt: amount $	e. Number of installments	@	Amount $
f. Interest due (if none, show N/A $			$
g. Penalty due (if none, show N/A $			$
h. Administrative cost (if none, show N/A $			$
i. Total collection to be made $	j. Commence deductions on (date)		

4. Due process: / / date actions taken; or attach / / acknowledgement / / consent

Creditor agency 30-day salary offset notice		Hearing held	
Employee did not respond (consent assumed)		Decision for creditor agency	
Employee requested a hearing		Other -	

I certify the following: (1) the debt identified above is properly due the United States from the named employee in the amount shown; (2) this agency's regulations implementing 5 U.S.C. 5514 have been approved by the Office of Personnel Management, and (3) the information concerning this agency's and the employee's actions is correct as stated.

5. Creditor agency information

a. Name	b. Appropriation/fund (title/symbol #)
c. Address	d. Disbursing officer (name/symbol #)
e. Signature of certifying official	f. Date
g. Title	h. Telephone number

PART 93—AIRCRAFT ALLOCATION

Sec.

93.1 Issuance of aircraft allocations.
93.3 Reporting requirements.

AUTHORITY: Sec. 9, 80 Stat. 944; 49 U.S.C. 1657.

§ 93.1 Issuance of aircraft allocations.

From time to time, the Director, Office of Emergency Transportation, issues planning orders allocating aircraft to the Department of Defense, identified by FAA registration number, for the Civil Reserve Air Fleet Program, or as a reserve fleet for use in certain contingencies in the Civil Reserve Air Fleet Program of the Department of Defense. The current listing of aircraft allocations may be obtained upon request from the Director, Office

of Emergency Transportation, Department of Transportation, Washington, DC 20590.

[32 FR 20778, Dec. 23, 1967, as amended by Amdt. 93–1, 33 FR 7821, May 29, 1968]

§ 93.3 Reporting requirements.

In the event any aircraft identified in the allocations in effect:

(a) Is destroyed or suffers major damage the owner or operator, or both, shall give immediate notice thereof to the Director, Office of Emergency Transportation; or

(b) Is sold, leased, or otherwise transferred, the transferor or owner, or both, shall give immediate notice thereof to the Director, Office of Emergency Transportation, together with full information concerning the identity of the transferee, the date and place of transfer, and the terms and conditions of the transfer.

[32 FR 20778, Dec. 23, 1967]

PART 95—ADVISORY COMMITTEES

Sec.
95.1 Applicability.
95.3 Definitions.
95.5 Use of advisory committees generally.
95.7 Industry advisory committees: Membership.
95.9 Meetings; other than industry advisory committees.
95.11 Meetings; industry advisory committees.
95.13 Antitrust laws.
95.15 Conflicts of interest statutes, orders, and regulations.

AUTHORITY: Sec. 9, 80 Stat. 944 (49 U.S.C. 1657); E.O. 11007, 3 CFR, 1959–1963 Comp., p. 573.

SOURCE: 33 FR 467, Jan. 12, 1968, unless otherwise noted.

§ 95.1 Applicability.

(a) This part prescribes uniform regulations governing the formation and use of advisory committees by the Office of the Secretary of Transportation, the U.S. Coast Guard, the Federal Aviation Administration, the Federal Highway Administration, the Federal Railroad Administration, the Urban Mass Transportation Administration, the National Highway Traffic Safety Administration, and the St. Lawrence Seaway Development Corporation. It does not apply to the National Transportation Safety Board.

(b) This part applies to advisory committees formed or used by the organizations named in paragraph (a) of this section. It also applies to those organizations whenever they affiliate with, participate in, or use similar advisory committees formed or used by other departments or agencies of the Executive Branch of the Government, unless specifically exempted under paragraph (c) of this section. Advisory committees whose membership includes ''consultants and advisers'' are subject to this part regardless of whether those members are considered to be Government employees on the days they attend committee meetings.

(c) This part does not apply to:

(1) Any advisory committee the purpose, composition, and operation of which is specified by statute, unless and to the extent that statute authorizes the President to prescribe regulations for the committee's formation and use.

(2) Any advisory committee composed wholly of representatives of State or local agencies or of charitable, religious, educational, civic, social welfare, or similar nonprofit organizations.

(3) Any local, regional, or national committee whose only function is to disseminate information for public agencies, or any local civil committee whose primary function is to perform a public service, other than giving advice or making recommendations to the Government.

[33 FR 467, Jan. 12, 1968, as amended by Amdt. 95–2, 35 FR 5331, Mar. 31, 1970; Amdt. 95–3, 36 FR 431, Jan. 13, 1971]

§ 95.3 Definitions.

For the purposes of this part:

(a) *Advisory committee* includes any committee, board, commission, council, conference, panel, task force, or other similar group, or any subcommittee, or other subgroup thereof, which is formed within the Department in the interest of obtaining advice or recommendations, or for any other purpose, and which is not composed wholly of officers or employees of the Government. It also includes any committee,

board, commission, council, conference, panel, task force, or other similar group, or any subcommittee or subgroup thereof, which is not formed within the Department, but only during the period it is being used by the Department in the same manner as a Government-formed advisory committee.

(b) *Industry advisory committee* includes any advisory committee composed predominately of members or representatives of a single industry or group of related industries, or any subdivision of a single industry, made on a geographic, service, or product basis.

(c) *Department* means Department of Transportation.

(d) *Secretary* means the Secretary of Transportation.

§ 95.5 Use of advisory committees generally.

(a) Advisory committees are formed to provide a means of obtaining advice, views, and recommendations of benefit to the operations of the Government from industrialists, businessmen, scientists, engineers, educators, and other public and private citizens whose experience and talents would not otherwise be available to the Department. An advisory committee may be used when its counsel is desired on matters under consideration by any part of the Department. Unless specifically authorized by law to the contrary, no advisory committee may be used for functions which are not solely advisory. Determinations of action to be taken with respect to matters upon which an advisory committee advises or recommends may be made only by a full-time, salaried officer or employee of the Government.

(b) An advisory committee may be established to serve the Department as a whole, the Office of the Secretary, any operating administration, any combination of the Office of the Secretary and the operating administrations, or the operating administrations collectively. However, no advisory committee may be formed or used unless (1) the committee is specifically authorized by law, or (2) the committee is specifically approved, in writing, by the Secretary or his designee, to be in the public interest in connection with the performance of duties imposed on the Department or any part of it.

§ 95.7 Industry advisory committees: Membership.

Each industry advisory committee must be reasonably representative of the group of industries, the single industry, or the product segment thereof to which it relates, taking into account the size and function of business enterprises in the industry or industries and their location, affiliation, and competitive status among other factors. Selection of industry members shall, unless otherwise provided by statute, be limited to persons actively engaged in operations in the particular industry, industries, or segments concerned, except in cases in which the Secretary or his designee considers that such a limitation would interfere with effective committee operations.

§ 95.9 Meetings; other than industry advisory committees.

(a) Meetings of an advisory committee, other than an industry advisory committee, may be held only at the call, or with the advance approval, of a full-time, salaried officer or employee of the Department, with an agenda formulated or approved by that officer or employee.

(b) Each meeting shall be chaired by, or be conducted in the presence of, a full-time, salaried officer or employee of the Government who is required to adjourn the meeting whenever he considers it to be in the public interest.

(c) Minutes shall be kept of each meeting. As a minimum, the minutes must contain a record of the persons present, a description of the matter discussed and conclusions reached, and a copy of any report received, issued, or approved by the committee. The accuracy of all minutes must be certified by a full-time, salaried officer or employee of the Government who was present during the meeting to which the minutes pertain.

(d) The Secretary or his designee may waive any requirement of this section in any case in which he determines that:

(1) Compliance with that requirement would interfere with the proper functioning of the committee or would be impracticable;

(2) Adequate provisions are made to assure otherwise that the operation of the committee is subject to Government control and purpose; and

(3) The waiver is in the public interest.

§ 95.11 Meetings; industry advisory committees.

(a) Meetings of an industry advisory committee may be held only at the call of a full-time, salaried officer or employee of the Department, with an agenda formulated by that officer or employee.

(b) Each meeting shall be chaired by a full-time, salaried officer or employee of the Government who is required to adjourn the meeting whenever he considers it to be in the public interest. The Secretary or his designee may waive the requirements of this paragraph in any case in which he determines that:

(1) Compliance with that requirement would interfere with the proper functioning of the committee or would be impracticable;

(2) Adequate provisions are made to assure otherwise that the operation of the committee is subject to Government control and purpose;

(3) The waiver is in the public interest; and

(4) The meeting will be conducted in the presence of a full-time, salaried officer or employee of the Government who is required to adjourn the meeting whenever he considers it to be in the public interest.

(c) A verbatim transcript shall be kept of the proceedings at each meeting, including the name of each person present, his affiliation, and the capacity in which he attended, except in any case in which the Secretary or his designee determines that a verbatim transcript would interfere with the proper functioning of the committee or would be impracticable and therefore waives the requirement as being in the public interest. In such a case the procedure prescribed in § 95.9(c) applies.

(d) No industry advisory committee may receive, compile, or discuss data or reports showing the current or projected commercial operations of any identified business enterprise.

[33 FR 467, Jan. 12, 1968, as amended by Amdt. 95–1, 33 FR 6913, May 3, 1968]

§ 95.13 Antitrust laws.

The activities of advisory committees are subject to the antitrust laws and committee members are not immune from prosecution under those laws. The Department of Justice takes the position that it retains complete freedom to institute proceedings, either civil or criminal, or both, in the event that any particular plan or course of action is used to accomplish unlawful private ends, and to institute civil actions to enjoin continuance of any act or practices found not to be in the public interest and persisted in after notice to desist. This part is intended to minimize the possibility of violating the antitrust laws. Industry representatives and Government personnel officially connected with advisory committees should be advised of the antitrust aspects of the committee activity.

§ 95.15 Conflicts of interest statutes, orders, and regulations.

There is a body of statutes, orders, and regulations prescribed by the President, the Secretary, and other authorities, dealing with conflicts of interest and designed to prevent any conflict between the official duties and status of Government officers and employees and their private interest. Government officers and employees are required to comply with all applicable laws, orders, and regulations. Part 99 of this chapter sets forth a comprehensive list of the conflicts of interest statutes and guidelines for the employees of the Department to follow in the application of these statutes to part-time advisers and consultants to the Government. Any officer or employee appointed to serve on an advisory committee who has any doubt or question respecting a possible conflict of interest shall seek specific legal advice on his individual situation.

PART 98—ENFORCEMENT OF RESTRICTIONS ON POST-EMPLOYMENT ACTIVITIES

Subpart A—Administration of Enforcement Proceedings

Sec.
98.1 Purpose.
98.2 Definitions.
98.3 Reports of apparent violations.
98.4 Initiation of administrative disciplinary proceeding.
98.5 Former employee response to notice.
98.6 Examiner.
98.7 Hearing.
98.8 Decision by examiner.
98.9 Decision if hearing waived.
98.10 Appeal.
98.11 Final administrative decision.

Subpart B—Administrative Sanctions

98.12 Administrative sanctions.

Subpart C—Judicial Review

98.13 Judicial review.

AUTHORITY: 18 U.S.C. 207; Pub. L. 96–28.

SOURCE: 48 FR 12383, Mar. 24, 1983, unless otherwise noted.

Subpart A—Administration of Enforcement Proceedings

§ 98.1 Purpose.

The purpose of this part is to set forth the administrative enforcement procedures that the Department of Transportation will follow when there is an allegation that a former employee of the Department has violated 18 U.S.C. 207.

§ 98.2 Definitions.

For the purposes of this part, the following definitions apply:

(a) *Administration* means each of the following:

(1) The United States Coast Guard.

(2) The Federal Aviation Administration.

(3) The Federal Highway Administration.

(4) The Federal Railroad Administration.

(5) The National Highway Traffic Safety Administration.

(6) The Urban Mass Transportation Administration.

(7) The Saint Lawrence Seaway Development Corporation.

(8) The Research and Special Programs Administration.

(9) The Maritime Administration.

(b) *Department* means the Department of Transportation.

(c) *18 U.S.C. 207* means 18 U.S.C. 207 (a), (b), or (c) or any regulations issued under 18 U.S.C. 207.

(d) *Secretary* means the Secretary of Transportation.

§ 98.3 Reports of apparent violations.

Any person may report, to the Assistant General Counsel for Environmental, Civil Rights and General Law, an apparent violation by a former employee of the Department of 18 U.S.C. 207.

§ 98.4 Initiation of administrative disciplinary proceeding.

(a) Whenever the Assistant General Counsel for Environmental, Civil Rights and General Law has determined that there is reasonable cause to believe that a former Departmental employee has violated 18 U.S.C. 207, the Assistant General Counsel for Environmental, Civil Rights, and General Law:

(1) Shall expeditiously provide that information to the Director, Office of Government Ethics, and to the Criminal Division, Department of Justice; and

(2) After coordinating any proceeding with the Criminal Division, Department of Justice, to avoid prejudicing criminal proceedings, may institute an administrative disciplinary proceeding in accordance with this part.

(b) The person who shall provide for the prosecution of the alleged violation in an administrative disciplinary proceeding under this part (hereinafter referred to as the ''Departmental counsel'') is:

(1) In a case where the last Departmental employer of the alleged violator is the Office of the Secretary, the Assistant General Counsel for Environmental, Civil Rights and General Law, or his or her designee; or

(2) In a case where the last Departmental employer of the alleged violator is an administration, the Chief Counsel, or his or her designee, for that administration.

(c) Before beginning an administrative disciplinary proceeding, the Departmental counsel shall provide the former employee with actual notice of the institution of a proceeding. This notice must include:

(1) A statement of allegations and the basis for those allegations, which statement must be sufficiently detailed to enable the former employee to prepare an adequate defense;

(2) Notification of the right to a hearing;

(3) An explanation of the method by which a hearing may be requested; and

(4) A statement of the possible sanctions that may be imposed if a violation by the former employee is found to have occurred.

§ 98.5 Former employee response to notice.

(a) Within 30 working days after service of a notice pursuant to § 98.4(c), the former employee may submit to the Departmental counsel in writing:

(1) A request for a hearing, which, if not all issues are disputed by the former employee, should specify those issues that are;

(2) Any evidence and arguments in lieu of a hearing or

(3) A statement that the allegations are true and set forth any factors that should be considered in determining the administrative sanction to be imposed.

(b) The Department shall deem the right to a hearing to have been waived by the former employee if the former employee does not submit a request under paragraph (b)(1) of this section within 30 working days after service of notice pursuant to § 98.4(c).

§ 98.6 Examiner.

(a) The presiding official at a hearing held under this part and the deciding official under § 98.9 of this part (hereinafter referred to as the ''examiner'') shall be designated by the Secretary.

(b) The examiner shall not have been involved in any of the events specified in the allegations, shall not have been involved in the investigation of the allegations and the institution of the proceedings under this part, and shall not be or have been employed by the administration, or the Office of the Secretary if applicable, in which the alleged violation occurred.

§ 98.7 Hearing.

(a) The examiner shall, within 30 working days of a request for a hearing under § 98.5(b), schedule the hearing for a reasonable time, date, and place. The examiner shall grant any delays or continuances that the examiner determines to be necessary and appropriate for fair resolution of the case, with due regard to the former employee's need for adequate time to prepare a defense and for expeditious resolution of allegations that may be damaging to that former employee's reputation.

(b) The following rights shall be granted to a former employee who requests a hearing under § 98.5(b):

(1) To represent oneself or to be represented by counsel.

(2) To introduce and examine witnesses and to submit physical evidence.

(3) To confront and cross-examine adverse witnesses.

(4) To present oral argument.

(5) To obtain a transcript or recording of the hearing on request from the official reporter upon payment of the fees fixed therefor.

(c) In a hearing under this part, the Federal Rules of Civil Procedure and Evidence do not apply. However, the examiner may make such orders and determinations regarding discovery, admissibility of evidence, conduct of examination and cross-examination, and similar matters the examiner deems necessary or appropriate to ensure orderliness in the proceedings and fundamental fairness to the parties.

§ 98.8 Decision by examiner.

(a) In a hearing under § 98.7 of this part, the Departmental counsel must establish a violation by a preponderance of the evidence.

(b) The examiner shall make a decision exclusively on matters of record in the proceeding and shall set forth in the decision:

(1) All findings of fact relevant to the matters at issue;

(2) All conclusions of law relevant to the matters at issue; and

(3) The sanction to be imposed, if any.

§ 98.9 Decision if hearing waived.

(a) If the former employee waives or, in accordance with § 98.5(b) of this part, is deemed to have waived a hearing under this part, the examiner shall, after review of the record as it exists, make a decision as to whether the former employee is in violation of 18 U.S.C. 207.

(b) In a decision under paragraph (a) of this section, the requirements of § 98.8 of this part apply.

§ 98.10 Appeal.

(a) Within 30 working days after receipt of a decision issued under § 98.8 or § 98.9 of this part, either the Departmental counsel or the former employee may appeal the decision to the Secretary.

(b) In making a decision on an appeal, the Secretary shall consider only the evidence admitted during the prior proceeding and contained in the record of that proceeding.

(c) If the Secretary modifies or reverses the initial decision, the Secretary shall specify the findings of fact and conclusions of law that are different from those of the examiner.

§ 98.11 Final administrative decision.

The final administrative decision under this part shall be:

(a) The decision of the examiner under § 98.8(b), if there is no appeal under § 98.10;

(b) The decision by the examiner under § 98.9, if a hearing is waived or is deemed to have been waived and there is no appeal under § 98.10; or

(c) The decision of the Secretary on an appeal under § 98.10.

Subpart B—Administrative Sanctions

§ 98.12 Administrative sanctions.

(a) The Secretary, in decisions under § 98.10 of this part, and the examiner, in decisions under § 98.8 and § 98.9 of this part, may impose an administrative sanction against a former employee who, after a final administrative decision under this part, is found to be in violation of 18 U.S.C. 207.

(b) The administrative sanctions that may be imposed under subsection (a) of this section are:

(1) Prohibiting the former employee from making, on behalf of any other person except the United States, any formal or informal appearance before, or, with the intent to influence, any oral or written communication to, the Department of any of its administrations on any matter of business for a period not to exceed five years; or

(2) Taking other appropriate disciplinary action, such as a reprimand or suspension from participation in a particular matter or matters before the Department.

Subpart C—Judicial Review

§ 98.13 Judicial review.

Any former employee found to have violated 18 U.S.C. 207 by a final administrative decision under this part may seek judicial review of disciplinary action imposed under this part.

PART 99—EMPLOYEE RESPONSIBILITIES AND CONDUCT

Subpart A—General

Sec.

99.735–1 Cross-reference to ethical conduct standards and financial disclosure regulations.

Subparts B–E [Reserved]

Subpart F—Responsibilities of the Government Employee and Special Government Employee Following Departure From Government Service

99.735–80 Applicability.
99.735–81 Post-employment duties and responsibilities.
APPENDIX A TO PART 99—CATEGORIES OF FINANCIAL INTERESTS EXEMPTED FROM THE PROHIBITIONS OF SECTION 208(A) OF TITLE 18, UNITED STATES CODE
APPENDIXES B–D TO PART 99 [RESERVED]
APPENDIX E TO PART 99—STATUTES REGULATING POST-EMPLOYMENT RESPONSIBILITIES OF GOVERNMENT AND SPECIAL GOVERNMENT EMPLOYEES

AUTHORITY: 49 U.S.C. 322; E.O. 12674, 54 FR 15159, 3 CFR, 1989 Comp., p. 215, as modified by E.O. 12731, 55 FR 42547, 3 CFR, 1990 Comp., p. 306.

SOURCE: Amdt. 99–10, 42 FR 3119, Jan. 14, 1977, unless otherwise noted.

Subpart A—General

§ 99.735–1 Cross-reference to ethical conduct standards and financial disclosure regulations.

Employees of the Department of Transportation are subject to the executive branch-wide Standards of Ethical Conduct at 5 CFR part 2635, the Department of Transportation regulations at 5 CFR part 6001 which supplement the executive branch-wide standards and the executive branch-wide financial disclosure regulations at 5 CFR part 2634.

[61 FR 39904, July 31, 1996]

Subparts B–E [Reserved]

Subpart F—Responsibilities of the Government Employee and Special Government Employee Following Departure From Government Service

§ 99.735–80 Applicability.

The provisions of this subpart apply only to employees who terminated government service before January 1, 1991.

[58 FR 7995, Feb. 11, 1993]

§ 99.735–81 Post-employment duties and responsibilities.

The duties and obligations of a Government employee (or a special Government employee) do not end when government service terminates by retirement, resignation, or for any other reason. In fact the U.S. Code sets forth specific criminal penalties for certain activities by former Government employees. To summarize broadly, section 207 of title 18, U.S. Code, prohibits a former Government employee from acting as agent or attorney in various types of proceedings and matters on behalf of a non-Government party when the employee was involved in the subject matter while working for the Government. The duration and nature of the prohibitions depend in part on the depth of the employee's involvement in the matter while in Government service. Section 208 of the same title relates to activities performed while a Government employee that benefit an employee's prospective private employer. All Government employees and special Government employees should become familiar with the provisions of the two statutory sections cited, which have been made a part of this regulation as appendix E, so that they will be aware of the restrictions which might affect them upon their termination from the Government service.

APPENDIX A TO PART 99—CATEGORIES OF FINANCIAL INTERESTS EXEMPTED FROM THE PROHIBITIONS OF SECTION 208(a) OF TITLE 18, UNITED STATES CODE

I. (a) Pursuant to the authority of section 208(b) of title 18, United States Code, the following are exempted from the prohibitions of section 208(a) of title 18, United States Code, because they are too remote or too inconsequential to affect the integrity of an employee's services in any matter in which he may act in his governmental capacity.

(1) Any holding in a widely held mutual fund, or regulated investment company, which does not specialize in an industry in which the possibility of conflict arise.

(2) Continued participation in a bona fide pension, retirement, group life, health, or accident insurance plan or other employee welfare or benefit plan that is maintained by a business or nonprofit organization by which the employee was formerly employed, to the extent that the employee's rights in the plans are vested and require no additional services by him or further payments to the plans by the organization with respect to the services of the employee. In addition, to the extent that the welfare or benefit plan is a profit sharing or stock bonus plan, this exemption does not apply and the procedures prescribed in §99.735–15c (c) through (e) will apply to the interest of that employee in the plan.

(3) Participation in an air carrier frequent flyers or substantially similar program that is available to the general public on the same terms and conditions and involves no direct financial interest in the carrier, such as stockholdings or similar types of investment interests.

[Amdt.99–10, 42 FR 3119, Jan. 14, 1977, as amended by Amdt. 99–14, 53 FR 16414, May 9, 1988]

APPENDIXES B–D TO PART 99
[RESERVED]

APPENDIX E TO PART 99—STATUTES REGULATING POST-EMPLOYMENT RESPONSIBILITIES OF GOVERNMENT AND SPECIAL GOVERNMENT EMPLOYEES

NOTE: This appendix applies only to employees who terminated government service before January 1, 1991.

§ 207 *Disqualification of former officers and employees in matters connected with former duties or offical responsibilities; disqualification of partners.*

(a) Whoever, having been an officer or employee of the executive branch of the United States Government, of any independent agency of the United States, or of the District of Columbia, including a special Government employee, after his employment has ceased, knowingly acts as agent or attorney for anyone other than the United States in connection with any judicial or other proceeding, application, request for a ruling or other determination, contract, claim, controversy, charge, accusation, arrest, or other particular matter involving a specific party or parties in which the United States is a party or has a direct and substantial interest and in which he participated personally and substantially as an officer or employee, through decision, approval, disapproval, recommendation, the rendering of advice, investigation, or otherwise, while so employed, or

(b) Whoever, having been so employed, within one year after his employment has ceased, appears personally before any court or department or agency of the Government as agent, or attorney for, anyone other than the United States in connection with any proceeding, application, request for a ruling or other determination, contract, claim, controversy, charge, accusation, arrest, or other particular matter involving a specific party or parties in which the United States is a party or directly and substantially interested, and which was under his official responsibility as an officer or employee of the Government at any time within a period of one year prior to the termination of such responsibility:

Shall be fined not more than $10,000 or imprisoned for not more than two years, or both: *Provided,* That nothing in subsection (a) or (b) prevents a former officer or employee, including a former special Government employee, with outstanding scientific or technological qualifications from acting as attorney or agent or appearing personally in connection with a particular matter in a scientific or technological field if the head of the department or agency concerned with the matter shall make a certification in writing, published in the FEDERAL REGISTER, that the national interest would be served by such action or appearance by the former officer or employee.

(c) Whoever, being a partner of an officer or employee of the executive branch of the United States Government, of any independent agency of the United States, or of the District of Columbia, including a special Government employee, acts as agent or attorney for anyone other than the United States, in connection with any judicial or other proceeding, application, request for a ruling or other determination, contract, claim, controversy, charge, accusation, arrest, or other particular matter in which the United States is a party or has a direct and substantial interest and in which such officer or employee of the Government or special Government employee participates or has participated personally and substantially as a Government employee through decision, approval, disapproval, recommendation, the rendering of advice, investigation or otherwise, or which is the subject of his official responsibility:

Shall be fined not more than $5,000, or imprisoned not more than one year, or both.

A partner of a present or former officer or employee of the executive branch of the United States Government, of any independent agency of the United States, or of the District of Columbia or of a present or former special Government employee shall as such be subject to the provisions of sections 203, 205, and 207 of this title only as expressly provided in subsection (c) of this section. (Added Pub. L. 87–349, section 1(a), Oct. 23, 1962, 76 Stat. 1123.)

§ 203 *Acts affecting a personal financial interest.*

(a) Except as permitted by subsection (b) hereof, whoever, being an officer or employee of the executive branch of the United States Government, of any independent agency of the United States, or of the District of Columbia, including a special Government employee, participates personally and substantially as a Government officer or employee, through decision, approval, disapproval, recommendation, the rendering of advice, investigation, or otherwise, in a judicial or other proceeding, application, request for a ruling or other determination, contract, claim, controversy, charge, accusation, arrest, or other particular matter in which, to his knowledge, he, his spouse, minor child, partner, organization in which he is serving as officer, director, trustee, partner or employee, or any person or organization with whom he is negotiating or has any arrangement concerning prospective employment, has a financial interest:

Shall be fined not more than $10,000, or imprisoned not more than two years, or both.

(b) Subsection (a) hereof shall not apply (1) if the officer or employee first advises the

Government official responsible for appointment to his position of the nature and circumstances of the judicial or other proceeding, application, request for a ruling or other determination, contract, claim, controversy, charge, accusation, arrest, or other particular matter and makes full disclosure of the financial interest and receives in advance a written determination made by such official that the interest is not so substantial as to be deemed likely to affect the integrity of the services which the Government may expect from such officer or employee, or (2) if, by general rule or regulation published in the FEDERAL REGISTER, the financial interest has been exempted from the requirements of clause (1) hereof as being too remote or too inconsequential to affect the integrity of Government officers' or employees' services. (Added Pub. L. 87–849, section 1(a), Oct. 23, 1962, 76 Stat. 1124.)

New 18 U.S.C. 208. This section forbids certain actions by an officer or employee of the Government in his role as a servant or representative of the Government. Its thrust is therefore to be distinguished from that of sections 203 and 205 which forbid certain actions in his capacity as a representative of persons outside the Government.

Subsection (a) in substance requires an officer or employee of the executive branch, an independent agency or the District of Columbia, including a special Government employee, to refrain from participating as such in any matter in which, to his knowledge, he, his spouse, minor child or partner has a financial interest. He must also remove himself from a matter in which a business or nonprofit organization with which he is connected or is seeking employment has a financial interest.

Subsection (b) permits the agency of an officer or employee to grant him an *ad hoc* exemption from subsection (a) if the outside financial interest in a matter is deemed not substantial enough to have an effect on the integrity of his services. Financial interests of this kind may also be made nondisqualifying by a general regulation published in the FEDERAL REGISTER.

Section 208 is similar in purpose to the former 18 U.S.C. 434 but prohibits a greater variety of conduct than the ''transaction of business with * * * [a] business entity'' to which the prohibition of section 434 was limited. In addition, the provision in section 208 including the interests of a spouse and others is new, as is the provision authorizing exemptions for insignificant interest.

[Amdt. 99-10, 42 FR 3119, Jan. 14, 1977, as amended by 58 FR 7995, Feb. 11, 1993]

APPENDIX TO SUBTITLE A—UNITED STATES RAILWAY ASSOCIATION—EMPLOYEE RESPONSIBILITIES AND CONDUCT

SUBPART A—GENERAL

Sec.
1 Purpose and policy.
3 Definitions.
5 Applicability.

SUBPART B—ETHICAL AND OTHER CONDUCT AND RESPONSIBILITIES OF EMPLOYEES

7 General.
9 Gifts, entertainment, and favors.
11 Outside employment and other activities.
13 Financial interests.
15 Conflicts of interest.
17 Disqualification arising from personal financial interests.
19 Use of Association property or official title.
21 Misuse of information.
23 Indebtedness.
25 Miscellaneous provisions.

SUBPART C—STATEMENTS OF EMPLOYMENT AND FINANCIAL INTEREST

31 Employees required to submit statement.
33 Time and place for submission of employee statements.
35 Supplementary statements.
37 Committee on Commerce, Information not known by employee.
39 Information not required.
41 Confidentiality of employee's statement.
43 Interpretation and advisory service.

SUBPART D—DISQUALIFICATION OF FORMER EMPLOYEES IN MATTERS CONNECTED WITH FORMER DUTIES OR OFFICIAL RESPONSIBILITIES; DISQUALIFICATION OF PARTNERS

51 Matters in which employee participated personally and substantially.
53 Matters under employee's official responsibility.
55 Employee with outstanding scientific or technological qualifications.
57 Partner of employee.
APPENDIX 1—CATEGORIES OF FINANCIAL INTERESTS EXEMPTED FROM THE PROHIBITIONS OF SECTIONS 13(A), 15, AND 17(A)
APPENDIX 2—LIST OF EMPLOYEES REQUIRED TO SUBMIT STATEMENTS OF EMPLOYMENT AND FINANCIAL INTERESTS UNDER SECTION 31 [RESERVED]

AUTHORITY: Sec. 202(a)(5)(2) of the Regional Rail Reorganization Act of 1973 (Pub. L. 93–236).

SOURCE: 39 FR 3825, Jan. 30, 1974.

SUBPART A—GENERAL

SECTION 1. *Purpose and policy.* (a) These regulations implement Pub. L. 93–236, The

Regional Rail Reorganization Act of 1973. They prescribe standards of ethical and other conduct, and reporting requirements, for employees of the United States Railway Association (the Association). The standards and requirements are appropriate to the particular functions and activities of the Association.

(b) The absence of a specific published standard of conduct covering an act tending to discredit an employee of the Association does not mean that the act is condoned, is permissible, or would not call for and result in corrective or disciplinary action.

(c) Personnel of the Association shall observe standards of conduct that will reflect credit on the Association.

SEC. 3. *Definitions.* Unless the context requires otherwise, the following definitions apply in these regulations:

''Association'' means the United States Railway Association established by Pub. L. 93–236.

''Chairman'' means the Chairman of the Board of Directors of the Association.

''Employee'' means an officer or employee of the Association.

''General Counsel'' means the General Counsel of the Association, or his designee.

''Includes'' means ''includes but is not limited to.''

''May'' is used in a permissive sense to state authority or permission to do the act prescribed, and the words ''a person may not * * *'' mean that a person is not required, authorized, or permitted to do the act prescribed.

''Shall'' is used in an imperative sense.

SEC. 5. *Applicability.* These regulations apply to each employee of the Association.

SUBPART B—ETHICAL AND OTHER CONDUCT AND RESPONSIBILITIES OF EMPLOYEES

SEC. 7. *General.* (a) Each employee shall avoid any action, whether or not specifically prohibited by these regulations, which might result in or create the appearance of:

(1) Using his Association office for private gain;

(2) Giving preferential treatment to any person;

(3) Impeding the efficiency or economy of the Association;

(4) Losing complete independence or impartiality;

(5) Making an Association decision outside of official channels; or

(6) Affecting adversely the confidence of the public in the integrity of the Association.

(b) An employee may not engage in criminal, infamous, dishonest, immoral, or notoriously disgraceful conduct, or any conduct prejudicial to the integrity of the Association.

SEC. 9. *Gifts, entertainment, and favors.* (a) Except as provided in paragraphs (b) and (c) of this section, an employee may not solicit or accept, directly or indirectly, any gift, gratuity, favor, entertainment, food, lodging, loan, or other thing of monetary value, from a person or employer of a person who:

(1) Has, or is seeking to obtain, contractual or other business or financial relationships with the Association.

(2) Has interests which may be substantially affected by the performance or nonperformance of that employee's official duties.

(b) Notwithstanding paragraph (a) of this section, an employee may:

(1) Accept a gift, gratuity, favor, entertainment, loan, or other thing of value when the circumstances make it clear that an obvious family relationship rather than the business of the persons concerned is the motivating factor;

(2) Accept food or refreshment of nominal value on infrequent occasions in the ordinary course of a luncheon or dinner meeting or other meeting or on an inspection tour if the employee is properly in attendance;

(3) Accept unsolicited advertising or promotional material such as pens, pencils, note pads, calendars, or other items of nominal intrinsic value; or

(4) Accept an invitation addressed to the Association, when approved by the General Counsel, to participate in an inaugural trip or similar ceremonial event related to transportation, and accept food, lodging, and entertainment incident thereto.

(c) An employee may not solicit a contribution from another employee for a gift to an official superior, make a donation as a gift to an official superior, or accept a gift from an employee receiving less pay than himself. However, this paragraph does not prohibit a voluntary gift of nominal value or a donation in a nominal amount made on a special occasion such as marriage, illness, retirement, or transfer.

SEC. 11. *Outside employment and other activities.* (a) An employee may not engage in any outside employment or other outside activity which is not compatible with the full and proper discharge of the duties and responsibilities of his employment with the Association. Incompatible activities include:

(1) Acceptance of a fee, compensation, gift, payment of expenses, or any other thing of monetary value in circumstances in which acceptance may result in, or create the appearance of, a conflict of interest; and

(2) Outside employment which tends to impair his mental or physical capacity to perform his duties and responsibilities of his employment with the Association in an acceptable manner.

(b) An employee may not receive any salary or anything of monetary value from a private source as compensation for his services to the Association.

(c) This section does not preclude an employee from participating in the affairs of, or accepting an award for a meritorious public contribution or achievement given by a charitable, religious, professional, social, or fraternal organization, a nonprofit educational or recreational organization, or a public service or civic organization.

SEC. 13. *Financial interests.* (a) Except where authorized by statute or these regulations, an employee may not have a direct or indirect financial interest that conflicts substantially, or appears to conflict substantially, with his Association duties and responsibilities. In any case in which such a question of financial interest arises the procedures set forth in section 17 apply.

(b) The fact that an employee is on leave of absence from employment with or has served as an attorney or consultant to, a railroad, or a company engaged in the manufacture, construction, or supply of railroad facilities and equipment, or a creditor of a railroad, shall not, of itself, be deemed to be a financial interest conflicting with his Association duties or responsibilities. This provision does not affect the obligation of such an employee to submit a statement of employment and financial interest as required by section 31(a)(1).

(c) The fact that an employee owns shares of stock, corporate bonds, or other corporate securities in any single railroad, or a company engaged in the manufacture, construction or supply of railroad facilities and equipment, or a creditor of a railroad, having a current aggregate market value of $10,000 or more, or an option to purchase such securities, shall not, in itself, be deemed to be a financial interest conflicting with his Association duties or responsibilities. Such ownership must, however, be reported in a special statement of financial interest, in a manner specified by the General Counsel, which shall be available for public inspection.

SEC. 15. *Conflicts of interest.* (a) Except where specifically exempted by statute or these regulations, a conflict of interest exists whenever the performance of the duties of an employee has or appears to have a direct and predictable effect upon a financial interest of such employee or of his spouse, minor child, partner, or person or organization with which he is associated or is negotiating for future employment.

(b) A conflict of interest exists even though there is no reason to suppose that the employee will, in fact, resolve the conflict to his own personal advantage rather than to that of the Association.

SEC. 17. *Disqualification arising from personal financial interests.* (a) Except as stated in paragraph (e) of this section, or except as permitted by statute, an employee may not participate personally and substantially as an employee, through decision, approval, disapproval, recommendation, the rendering of advice, investigation or otherwise, in a judicial or other proceeding, application, request for a ruling or other determination, contract, claim controversy, charge, accusation, or other particular matter in which, to his knowledge, he, his spouse, minor child, a blood relative who is a resident of the employee's household, partner, organization in which he is serving as officer, director, trustee, partner or employee, or any person or organization with whom he is negotiating or has any arrangement concerning prospective employment, has a financial interest, unless he shall cause the financial interest involved to be divested, or request a determination of the propriety of his participation in any matter by informing the General Counsel of the nature and circumstances of the matter and financial interest involved.

(b) After examining the information submitted the General Counsel may:

(1) Relieve the employee from participation in the matter and, if possible, reassign it to another employee who is not subordinate to the relieved employee;

(2) Approve the employee's participation upon determining in writing that the interest involved is not so substantial as to be likely to affect the integrity of the services the Association may expect from the employee;

(3) Recommend the reassignment of the employee; or

(4) If none of these alternatives is feasible, direct the employee to cause the financial interest to be divested so that it no longer comes within the scope of this section.

(c) In any case in which the General Counsel has reason to believe that an employee may have an interest that would be disqualifying under this section, he shall discuss the matter with the employee. If he finds that the interest exists, he may take any of the actions stated in paragraph (b) of this section.

(d) In any case in which the employee is dissatisfied with the General Counsel's decision, the employee may appeal the matter to the Chairman of the Association for reconsideration and final determination of the appropriate action.

(e) Information concerning categories of financial interests which are exempted from the prohibitions of §§13(a), 15, and paragraph (a) of this section as being too remote or too inconsequential to affect the integrity of an employee's interest in a matter, are set forth in Appendix 1.

SEC. 19. *Use of Association property or official title.* (a) An employee may not, directly or indirectly, use or allow the use of Association property of any kind, including property leased to the Association, for other than an officially approved activity. Each employee has a positive duty to protect and conserve Association property, including equipment,

supplies, and other property entrusted or issued to him.

(b) An employee may not, directly or indirectly, use or allow the use of his title or position in connection with any commercial enterprise or in endorsing any commercial product or service.

SEC. 21. *Misuse of information.* An employee may not, for the purpose of furthering a private interest, directly or indirectly, use or allow the use of official information obtained through or in connection with his Association employment, if that information has not been made available by the Association to the general public.

SEC. 23. *Indebtedness.* Each employee shall pay his just financial obligations in a proper and timely manner, especially those imposed by law such as Federal, State, or local taxes. For the purposes of this section ''just financial obligations'' means those that are recognized as such by the employee or reduced to a judgment by a court, and ''in a proper and timely manner'' means in a manner which the Association determines does not, under the circumstances, reflect adversely on the Association as his employer. The Association will not determine the validity or amount of a disputed debt and will not initiate action to collect such debts.

SEC. 25. *Miscellaneous provisions.* (a) Each employee shall acquaint himself with these regulations which relate to his ethical and other conduct as an employee of the Association.

(b) In the appointment of personnel and in assignment of their duties, the President of the Association shall take steps to avoid, to as great an extent as possible, any conflict between the Association duties and the private interests of such personnel.

SUBPART C—STATEMENTS OF EMPLOYMENT AND FINANCIAL INTEREST

SEC. 31. *Employees required to submit statement.* (a) Each of the following employees shall submit a statement of employment and financial interest on a form provided by the Association:

(1) Each employee who within the preceding two years was employed by or served as an attorney or consultant to, a railroad or a company significantly engaged in the manufacture, construction or supply of railroad facilities and equipment, including, but not limited to, rolling stock, terminal facilities, signal equipment, track and road bed, and electrical and communication transmission equipment. The General Counsel shall decide, in a doubtful case, whether the relationship to the railroad industry is sufficiently significant as to require submission of a statement of employment and financial interest.

(2) Each employee who is in a position identified in Appendix 2.

(b) Any employee who believes that his position has been improperly included as one requiring the submission of a statement of employment and financial interest is entitled to have that inclusion reviewed by the General Counsel.

(c) Any employee in a position which meets the criteria in paragraph (a) of this section may be excluded from the reporting requirements of this section if the General Counsel determines that the duties of the position are at such a level of responsibility that the submission of a statement is not necessary because of the degree of supervision and review and the remote or inconsequential effect on the integrity of the Association.

SEC. 33. *Time and place for submission of employee statements.* Each employee who is subject to the reporting requirements of sec. 31 shall submit his employment and financial interest statement to the General Counsel within 30 days after entering the employ of the Association.

SEC. 35. *Supplementary statements.* (a) Each employee shall, not later than July 31 of each year, file a supplementary statement, showing, as of June 30 of that year, any change in, or addition to, the information contained in his statement of employment and financial interest. If changes or additions have not occurred, a negative report is required.

(b) Compliance with the reporting requirements of this subpart is not an alternative to observance of the conflict-of-interest provisions of subpart B of these regulations, but is to facilitate uniform compliance with, and the orderly administration of subpart B.

SEC. 37. *Committee on Commerce, Information not known by employee.* If any information required to be included on a statement of employment and financial interest or a supplementary statement, including any holding placed in trust, is not known to the employee but is known to another person, the employee shall request that other person to submit the information on his behalf, and the employee shall so notify the General Counsel.

SEC. 39. *Information not required.* An employee is not required to submit on a statement of employment and financial interest or supplementary statement any information relating to his connection with, or interest in, a professional society, or a charitable, religious, social, fraternal, recreational, public service, civic, or political organization, or a similar organization not conducted as a business enterprise. For the purposes of this section, educational and other institutions doing research and development or related work involving grants of money from or contracts with the Association are considered to be ''business enterprises'' and are required to be included in the

employee's statement of employment and financial interest.

SEC. 41. *Confidentiality of employee's statement.* (a) Except for special statements of financial interest required by sec. 13(c) each statement of employment and financial interest and each supplementary statement shall be held in confidence. The reviewing officials and others who receive statements are responsible for maintaining them in confidence and shall not allow access to, or allow information to be disclosed from, a statement except to carry out the purposes of these regulations. Information may not be disclosed to any person outside the Association, except as the General Counsel may determine for good cause shown. No disclosure permitted by this paragraph may be made unless the affected employee has been notified that disclosure is contemplated, and the employee is given an opportunity to present reasons and arguments to maintain the confidentiality of the statement.

(b) Each statement of employment and financial interest and each supplementary statement shall be maintained in the records of the Association.

SEC. 43. *Interpretation and advisory service.* The General Counsel shall provide authoritative counseling and interpretations to employees who require advice and guidance on questions of conflicts of interest or any other matters of legal import covered by these regulations.

SUBPART D—DISQUALIFICATION OF FORMER EMPLOYEES IN MATTERS CONNECTED WITH FORMER DUTIES OR OFFICIAL RESPONSIBILITIES; DISQUALIFICATION OF PARTNERS

SEC. 51. *Matters in which employee participated personally and substantially.* Except as permitted by sec. 55 hereof, an employee of the Association, after his employment has ceased, may not act as agent or attorney for anyone other than the Association in connection with any judicial or other proceeding, application, request for a ruling or other determination, contract claim, controversy, charge, accusation, arrest, or other particular matter involving a specific party or parties, in which the Association is a party or has a direct and substantial interest and in which he participated personally and substantially as an employee, through decision, approval, disapproval, recommendation, the rendering of advice, investigation, or otherwise, while so employed.

SEC. 53. *Matters under employee's official responsibility.* Except as permitted by sec. 55 hereof, an employee of the Association may not, within one year after his employment has ceased, appear personally before the Association or any court or department or agency of the Government as agent, or attorney, for anyone other than the Association in connection with any proceeding, application, request for a ruling or other determination, contract, claim, controversy, charge, accusation, arrest, or other particular matter involving a specific party or parties, in which the Association is a party or directly and substantially interested, and which was under his official responsibility as an officer or employee of the Association at any time within a period of one year prior to the termination of such responsibility.

SEC. 55. *Employee with outstanding scientific or technological qualifications.* A former employee with outstanding scientific or technological qualifications may act as attorney or agent or appear personally in connection with a particular matter in a scientific or technological field if the General Counsel certifies in writing, in advance, that the public interest would be served by such action or appearance.

SEC. 57. *Partner of employee.* A partner of an employee of the Association may not act as agent or attorney for anyone other than the Association, in connection with any judicial or other proceeding, application, request for a ruling or other determination, contract, claim, controversy, charge, accusation, arrest, or other particular matter in which the Association is a party or has a direct and substantial interest and in which such employee of the Association participates personally and substantially as an employee through decision, approval, disapproval, recommendation, the rendering of advice, investigation or otherwise, or which is the subject of his official responsibility.

APPENDIX 1—CATEGORIES OF FINANCIAL INTERESTS EXEMPTED FROM THE PROHIBITIONS OF SECTIONS 13(A), 15, AND 17(A)

I. (a) The following are exempted from the prohibitions of sections 13(a), 15, and 17(a), because they are too remote or too inconsequential to affect the integrity of an employee's services in any matter in which he may act in his official capacity.

(1) Any holding in a widely held mutual fund, or regulated investment company, which does not specialize in the transportation industry.

(2) Ownership of shares of stock and of corporate bonds or other corporate securities, if the current aggregate market value of the stocks and other securities so owned in any single corporation is less than $10,000 and is less than one percent of the outstanding stock of the organization concerned, and if the employee, his spouse, or minor children are not active in the management of the organization and have no other connection with or interest in it.

(3) Continued participation in a bona fide pension, retirement, deferred compensation, group life, health, or accident insurance plan or other employee welfare or benefit plan that is maintained by a business or nonprofit

organization by which the employee was formerly employed, to the extent that the employee's rights in the plans are vested and require no additional services by him. To the extent the welfare or benefit plan is a profit sharing or stock bonus plan, this exemption does not apply.

(b) Notwithstanding paragraph 1(a)(2), the interest of an employee, whose position is listed in section II of this appendix, shall not be exempt from the prohibitions of sections 13(a), 15, and 17(a), with respect to any stock or other security holding in an organization to which he is assigned, or for which he has specific responsibility as a part of his regular duties, for conducting inspections or issuing certificates, waivers, exemptions, or approvals.

II. The following is a list of positions to which the exemption in paragraph 1(a)(2) of this appendix does not apply. This list may be amended at any time by the Association.

[To be supplied]

APPENDIX 2—LIST OF EMPLOYEES REQUIRED TO SUBMIT STATEMENTS OF EMPLOYMENT AND FINANCIAL INTEREST UNDER SECTION 31 [RESERVED]

[39 FR 3825, Jan. 30, 1974]