9–3–98
Vol. 63 No. 171
Pages 46861–47126

federal register

Thursday
September 3, 1998

Briefings on how to use the Federal Register
For information on briefings in Washington, DC, and New York City, see announcement on the inside cover of this issue.

Now Available Online via
GPO Access

Free online access to the official editions of the *Federal Register, the Code of Federal Regulations* and other Federal Register publications is available on *GPO Access*, a service of the U.S. Government Printing Office at:

http://www.access.gpo.gov/nara/index.html

For additional information on ***GPO Access*** products, services and access methods, see page II or contact the *GPO Access* User Support Team via:

★ Phone: toll-free: 1-888-293-6498

★ Email: gpoaccess@gpo.gov

Attention: Federal Agencies

Plain Language Tools Are Now Available

The Office of the Federal Register offers Plain Language Tools on its Website to help you comply with the President's Memorandum of June 1, 1998—Plain Language in Government Writing (63 FR 31883, June 10, 1998). Our address is: http://www.nara.gov/fedreg

For more in-depth guidance on the elements of plain language, read ''Writing User-Friendly Documents'' on the National Partnership for Reinventing Government (NPR) Website at: http://www.plainlanguage.gov

The **FEDERAL REGISTER** is published daily, Monday through Friday, except official holidays, by the Office of the Federal Register, National Archives and Records Administration, Washington, DC 20408, under the Federal Register Act (44 U.S.C. Ch. 15) and the regulations of the Administrative Committee of the Federal Register (1 CFR Ch. I). The Superintendent of Documents, U.S. Government Printing Office, Washington, DC 20402 is the exclusive distributor of the official edition.

The **Federal Register** provides a uniform system for making available to the public regulations and legal notices issued by Federal agencies. These include Presidential proclamations and Executive Orders, Federal agency documents having general applicability and legal effect, documents required to be published by act of Congress, and other Federal agency documents of public interest.

Documents are on file for public inspection in the Office of the Federal Register the day before they are published, unless the issuing agency requests earlier filing. For a list of documents currently on file for public inspection, see http://www.nara.gov/fedreg.

The seal of the National Archives and Records Administration authenticates the Federal Register as the official serial publication established under the Federal Register Act. Under 44 U.S.C. 1507, the contents of the **Federal Register** shall be judicially noticed.

The **Federal Register** is published in paper and on 24x microfiche. It is also available online at no charge as one of the databases on GPO Access, a service of the U.S. Government Printing Office.

The online edition of the **Federal Register** is issued under the authority of the Administrative Committee of the Federal Register as the official legal equivalent of the paper and microfiche editions (44 U.S.C. 4101 and 1 CFR 5.10). It is updated by 6 a.m. each day the **Federal Register** is published and it includes both text and graphics from Volume 59, Number 1 (January 2, 1994) forward.

GPO Access users can choose to retrieve online **Federal Register** documents as TEXT (ASCII text, graphics omitted), PDF (Adobe Portable Document Format, including full text and all graphics), or SUMMARY (abbreviated text) files. Users should carefully check retrieved material to ensure that documents were properly downloaded.

On the World Wide Web, connect to the **Federal Register** at http://www.access.gpo.gov/nara. Those without World Wide Web access can also connect with a local WAIS client, by Telnet to swais.access.gpo.gov, or by dialing (202) 512-1661 with a computer and modem. When using Telnet or modem, type swais, then log in as guest with no password.

For more information about GPO Access, contact the GPO Access User Support Team by E-mail at gpoaccess@gpo.gov; by fax at (202) 512–1262; or call (202) 512–1530 or 1–888–293–6498 (toll free) between 7 a.m. and 5 p.m. Eastern time, Monday–Friday, except Federal holidays.

The annual subscription price for the **Federal Register** paper edition is $555, or $607 for a combined **Federal Register,** Federal Register Index and List of CFR Sections Affected (LSA) subscription; the microfiche edition of the **Federal Register** including the Federal Register Index and LSA is $220. Six month subscriptions are available for one-half the annual rate. The charge for individual copies in paper form is $8.00 for each issue, or $8.00 for each group of pages as actually bound; or $1.50 for each issue in microfiche form. All prices include regular domestic postage and handling. International customers please add 25% for foreign handling. Remit check or money order, made payable to the Superintendent of Documents, or charge to your GPO Deposit Account, VISA, MasterCard or Discover. Mail to: New Orders, Superintendent of Documents, P.O. Box 371954, Pittsburgh, PA 15250–7954.

There are no restrictions on the republication of material appearing in the **Federal Register.**

How To Cite This Publication: Use the volume number and the page number. Example: 63 FR 12345.

SUBSCRIPTIONS AND COPIES

PUBLIC	
Subscriptions:	
Paper or fiche	**202–512–1800**
Assistance with public subscriptions	**512–1806**
General online information	**202–512–1530; 1–888–293–6498**
Single copies/back copies:	
Paper or fiche	**512–1800**
Assistance with public single copies	**512–1803**
FEDERAL AGENCIES	
Subscriptions:	
Paper or fiche	**523–5243**
Assistance with Federal agency subscriptions	**523–5243**

FEDERAL REGISTER WORKSHOP

THE FEDERAL REGISTER: WHAT IT IS AND HOW TO USE IT

FOR: Any person who uses the Federal Register and Code of Federal Regulations.

WHO: Sponsored by the Office of the Federal Register.

WHAT: Free public briefings (approximately 3 hours) to present:

1. The regulatory process, with a focus on the Federal Register system and the public's role in the development regulations.
2. The relationship between the Federal Register and Code of Federal Regulations.
3. The important elements of typical Federal Register documents.
4. An introduction to the finding aids of the FR/CFR system.

WHY: To provide the public with access to information necessary to research Federal agency regulations which directly affect them. There will be no discussion of specific agency regulations.

WASHINGTON, DC

WHEN: September 15, 1998 at 9:00 a.m.

WHERE: Office of the Federal Register
Conference Room,
800 North Capitol Street, N.W.
Washington, DC
(3 blocks north of Union Station Metro)

RESERVATIONS: 202–523–4538

NEW YORK CITY

WHEN: September 22, 1998 at 9:00 a.m.

WHERE: National Archives—Northeast Region
201 Varick Street, 12th Floor
New York, New York

RESERVATIONS: 1–800–688–9889 x 0
(Federal Information Center)

Printed on recycled paper.

Contents

Federal Register

Vol. 63, No. 171

Thursday, September 3, 1998

Agricultural Marketing Service
RULES
Kiwifruit grown in—
California, 46861–46866
Milk marketing orders:
Southwest Plains, 46866–46868

Agriculture Department
See Agricultural Marketing Service
See Forest Service
See Grain Inspection, Packers and Stockyards Administration

Air Force Department
NOTICES
Meetings:
Scientific Advisory Board, 47014

Broadcasting Board of Governors
NOTICES
Meetings; Sunshine Act, 46997

Census Bureau
NOTICES
Agency information collection activities:
Proposed collection; comment request, 46997–46998

Centers for Disease Control and Prevention
NOTICES
Vaccine information materials:
Hepatitis B, haemophilus influenzae type b (Hib), varicella (chickenpox), and measles, mumps, rubella (MMR) vaccines, 47026–47031

Children and Families Administration
NOTICES
Agency information collection activities:
Submission for OMB review; comment request, 47031

Coast Guard
RULES
Ports and waterways safety:
Copper Canyon, Lake Havasu, Colorado River; regulated navigation area
Correction, 46889
Dorchester Bay, MA; safety zone, 46890–46891
Gloucester Harbor, MA; safety zone, 46888–46889
Lower Mississippi River, LA; safety zone, 46891

Commerce Department
See Census Bureau
See Economics and Statistics Administration
See International Trade Administration
See National Oceanic and Atmospheric Administration
See Patent and Trademark Office

Commodity Futures Trading Commission
NOTICES
Contract market proposals:
Chicago Mercantile Exchange—
Russian rubles, 47007–47008

Corporation for National and Community Service
PROPOSED RULES
Foster grandparent program, 46963–46972
Retired and senior volunteer program, 46972–46978
Senior companion program, 46954–46963

Defense Department
See Air Force Department
NOTICES
Agency information collection activities:
Proposed collection; comment request, 47008
Meetings:
Historical Records Declassification Advisory Panel, 47008
Travel per diem rates, civilian personnel; changes, 47008–47013

Delaware River Basin Commission
NOTICES
Hearings, 47014

Drug Enforcement Administration
NOTICES
Applications, hearings, determinations, etc.:
Ganes Chemicals, Inc., 47040
Organix, Inc., 47040–47041
Roche Diagnostic Systems, Inc., 47041

Economics and Statistics Administration
NOTICES
Meetings:
2000 Census Advisory Committee, 46998–46999

Education Department
NOTICES
Meetings:
Student Financial Assistance Advisory Committee, 47014–47015

Energy Department
See Federal Energy Regulatory Commission

Environmental Protection Agency
RULES
Acquisition regulations:
Quick-closeout procedures eliminated, etc., 46898–46899
Air quality implementation plans; approval and promulgation; various States:
California, 46892–46894
Kentucky, 46894–46898
Drinking water:
National primary and secondary drinking water regulations—
Chemical and microbiological contaminants; analytical methods for compliance determinations, 47097–47114
PROPOSED RULES
Air programs:
Ambient air quality standards, national—
Regional haze standards for class I Federal areas (large national parks and wilderness areas); visibility protection program; data availability, 46952–46953

Air quality implementation plans; approval and promulgation; various States:
California, 46953–46954
Kentucky, 46954
Drinking water:
National primary and secondary drinking water regulations—
Chemical and microbiological contaminants; analytical methods for compliance determinations, 47115–47116
NOTICES
Agency information collection activities:
Proposed collection; comment request, 47022
Project XL (excellence and leadership) innovative technologies projects:
Lucent Technologies, Inc.; umbrella final project agreement and related documents, 47022–47023
Reporting and recordkeeping requirements, 47023–47024
Water quality criteria:
Criteria and standards plan; priorities for future; availability, 47024–47025

Federal Aviation Administration
RULES
Airworthiness directives:
Airbus, 46876–46878
Boeing, 46878–46880
British Aerospace, 46873–46875
Gulfstream, 46870–46872
McDonnell Douglas, 46872–46876
McDonnell Douglas; correction, 47091
SOCATA-Groupe AEROSPATIALE, 46868–46870
Class E airspace; correction, 46880–47091
PROPOSED RULES
Airworthiness directives:
de Havilland, 46925–46927
Dornier, 46924–46925
Empresa Brasileira de Aeronautica S.A., 46932–46934
Lockheed, 46927–46932
McDonnell Douglas, 46934–46936
Class E airspace, 46936–46937

Federal Communications Commission
PROPOSED RULES
Radio stations; table of assignments:
Mississippi, 46978–46979
Oklahoma, 46979

Federal Energy Regulatory Commission
NOTICES
Electric rate and corporate regulation filings:
Kansas City Power & Light Co. et al., 47015–47018
Portland General Electric Co. et al., 47018–47021
Southern Indiana Gas & Electric Co. et al., 47021–47022

Federal Highway Administration
RULES
Motor vehicle operation by intoxicated persons, 46881–46887
NOTICES
Environmental statements; notice of intent:
Park County, WY, 47081–47082

Federal Reserve System
NOTICES
Federal Open Market Committee:
Domestic policy directives, 47025

Financial Management Service
See Fiscal Service

Fiscal Service
NOTICES
Agency information collection activities:
Proposed collection; comment request, 47083–47085

Fish and Wildlife Service
RULES
Endangered and threatened species:
Illinois cave amphipod, 46900–46910
Hunting and fishing:
Refuge-specific regulations, 46910–46923

Food and Drug Administration
NOTICES
Agency information collection activities:
Proposed collection; comment request, 47031–47032

Forest Service
NOTICES
Meetings:
California Coast Province Advisory Committee, 46996

General Services Administration
NOTICES
Agency information collection activities:
Submission for OMB review; comment request, 47025–47026

Grain Inspection, Packers and Stockyards Administration
NOTICES
Stockyards; posting and deposting:
Bloomington Livestock Auction, IL, et al., 46996–46997
Southwest Livestock Auction, NM, 46997

Health and Human Services Department
See Centers for Disease Control and Prevention
See Children and Families Administration
See Food and Drug Administration
See Health Resources and Services Administration

Health Resources and Services Administration
NOTICES
Grant and cooperative agreement awards:
National Foundation for the Centers for Disease Control and Prevention, Inc., 47032–47033
Organization, functions, and authority delegations:
Managed Care Center, 47033

Housing and Urban Development Department
NOTICES
Agency information collection activities:
Submission for OMB review; comment request, 47033–47035

Interior Department
See Fish and Wildlife Service
See Land Management Bureau
See Minerals Management Service
See Surface Mining Reclamation and Enforcement Office

Internal Revenue Service
PROPOSED RULES
Income taxes:
Taxpayer Relief Act—
Roth IRAs, 46937–46951

International Boundary and Water Commission, United States and Mexico
NOTICES
Environmental statements; notice of intent:
El Paso-Las Cruces regional sustainable water project, Sierra and Dona Ana Counties, NM, and El Paso County, TX, 47042–47043

International Trade Administration
NOTICES
Antidumping:
Stainless steel round wire from—
Canada et al., 46999
Export trade certificates of review, 46999–47000
Senior Executive Service:
Performance Review Board; membership, 47000

Justice Department
See Drug Enforcement Administration
See Justice Programs Office
NOTICES
Pollution control; consent judgments:
BFX Hospitality Group, Inc., 47039–47040
Pacific Hide & Fur Depot, Inc., et al., 47040

Justice Programs Office
NOTICES
Agency information collection activities:
Proposed collection; comment request, 47041

Labor Department
See Labor-Management Standards Office
See Mine Safety and Health Administration
See Occupational Safety and Health Administration
NOTICES
National women veterans original art design search, 47093–47095

Labor-Management Standards Office
RULES
Organization, functions, and authority delegations:
Labor-management programs and labor-management standards—
Federal sector labor organizations; conduct standards; technical amendments; correction, 46887–46888

Land Management Bureau
NOTICES
Alaska Native claims selection:
Koniag, Inc., Regional Native Corp., 47035
Classification of public lands:
California, 47035–47036
Meetings:
Resource advisory councils—
John Day-Snake, 47036
Science Advisory Board, 47036
Realty actions; sales, leases, etc.:
Arizona, 47036–47037
California, 47037
Resource management plans, etc.:
Cibola-Trigo Wild Horse and Burro Herd Management Area, AZ, 47037–47038
Survey plat filings:
New Mexico, 47038

Mexico and United States, International Boundary and Water Commission
See International Boundary and Water Commission, United States and Mexico

Minerals Management Service
NOTICES
Meetings:
Wyoming; Federal royalty-in-kind (RIK) pilot program for crude oil, 47038–47039
Royalty management:
Electronic commerce implementation or pilot testing; presentation, 47039

Mine Safety and Health Administration
RULES
Mining products; testing, evaluation, and approval:
Flame safety lamps and single-shot blasting units; CFR parts removed, 47117–47119
PROPOSED RULES
Coal and metal and nonmetal mine safety and health:
Underground mines—
Lighting equipment, coal dust/rock dust analyzers, and methane detectors; regulations improved and eliminated, 47120–47122
Coal mine safety and health:
Underground mines—
Approved books and records; regulations improved and eliminated, 47122–47123
Coal mine respirable dust samplers; calibration and maintenance procedures; regulations improved and eliminated, 47123–47126

National Aeronautics and Space Administration
NOTICES
Environmental statements; availability, etc.:
Mars Surveyor 1998 missions, 47043–47044

National Archives and Records Administration
NOTICES
Agency records schedules; availability, 47044–47045

National Highway Traffic Safety Administration
RULES
Motor vehicle operation by intoxicated persons, 46881–46887
Motor vehicle safety standards:
Bottom of automotive fuel tanks; protection from rupture by roadway hazards; petition denied, 46899–46900
PROPOSED RULES
Anthropomorphic test devices:
Occupant crash protection—
Hybrid III test dummies; fifth percentile female adult dummy design and performance specifications, 46981–46992
Hydrid III test dummies; 6-year old child dummy design and performance specifications; correction, 46979–46981

National Oceanic and Atmospheric Administration
PROPOSED RULES
Fishery conservation and management:
Alaska; fisheries of Exclusive Economic Zone—
Bering Sea and Aleutian Islands groundfish, 46993–46995
NOTICES
Permits:
Marine mammals, 47000

National Science Foundation
NOTICES
Meetings:
Design, Manufacture, and Industrial Innovation Special Emphasis Panel, 47045

Mathematical Sciences Special Emphasis Panel, 47045–47046

Nuclear Regulatory Commission
NOTICES
Regulatory guides; issuance, availability, and withdrawal, 47046

Occupational Safety and Health Administration
NOTICES
Meetings:
Occupational Safety and Health Federal Advisory Council, 47041–47042

Patent and Trademark Office
RULES
Patent cases:
Fee revisions (1999 FY)
Correction, 46891–46892
NOTICES
Patents:
Chemical compositions species, single prior art reference; claims examination guidelines, 47000–47007

Personnel Management Office
NOTICES
Health benefits, Federal employees:
Medically underserved areas (1999 CY), 47046

Public Debt Bureau
See Fiscal Service

Public Health Service
See Centers for Disease Control and Prevention
See Food and Drug Administration
See Health Resources and Services Administration

Securities and Exchange Commission
RULES
Securities:
Shareholders proposals
Correction, 46881
NOTICES
Intermarket Trading System; plan amendments, 47050–47051
Self-regulatory organizations; proposed rule changes:
American Stock Exchange, Inc., 47052–47056
Chicago Stock Exchange, Inc., 47056–47057
Depository Trust Corp., 47057–47058
National Association of Securities Dealers, Inc., 47058–47077
Philadelphia Stock Exchange, Inc., 47077–47080
Year 2000 conversion; regulatory moratorium; policy statement, 47051–47052
Applications, hearings, determinations, etc.:
State Street Bank & Trust Co. et al., 47046–47050

Social Security Administration
NOTICES
Agency information collection activities:
Submission for OMB review; comment request, 47080

Surface Mining Reclamation and Enforcement Office
RULES
Permanent program and abandoned mine land reclamation plan submissions:
Kentucky; correction, 47091
PROPOSED RULES
Abandoned mine land reclamation:
Projects financing, 46951–46952

Surface Transportation Board
NOTICES
Railroad operation, acquisition, construction, etc.:
Union Pacific Railroad Co., 47082

Transportation Department
See Coast Guard
See Federal Aviation Administration
See Federal Highway Administration
See National Highway Traffic Safety Administration
See Surface Transportation Board
NOTICES
Agency information collection activities:
Submission for OMB review; comment request, 47080–47081
Aviation proceedings:
Agreements filed; weekly receipts, 47081
Certificates of public convenience and necessity and foreign air carrier permits; weekly applications, 47081

Treasury Department
See Fiscal Service
See Internal Revenue Service
NOTICES
Agency information collection activities:
Submission for OMB review; comment request, 47082–47083

Veterans Affairs Department
NOTICES
Agency information collection activities:
Proposed collection; comment request, 47085–47086
Submission for OMB review; comment request, 47086–47090

Separate Parts In This Issue

Part II
Department of Labor, 47093–47095

Part III
Environmental Protection Agency, 47097–47116

Part IV
Department of Labor, Mine Safety, Health and Inspection Service, 47117–47126

Reader Aids
Consult the Reader Aids section at the end of this issue for phone numbers, online resources, finding aids, reminders, and notice of recently enacted public laws.

CFR PARTS AFFECTED IN THIS ISSUE

A cumulative list of the parts affected this month can be found in the Reader Aids section at the end of this issue.

7 CFR
920 46861
1106 46866

14 CFR
39 (8 documents) 46868, 46870, 46872, 46873, 46875, 46876, 46878, 4701
71 (2 documents) 46880, 47091

Proposed Rules:
39 (5 documents) 46924, 46925, 46927, 46932, 46934
71 46936

17 CFR
240 46881

23 CFR
1225 46881

26 CFR

Proposed Rules:
1 46937

29 CFR
406 46887
408 46887

30 CFR
21 47118
24 47118
75 47118
917 47091

Proposed Rules:
26 47120
29 47120
57 47120
70 47123
71 47123
75 47120
90 47123
707 46951
874 46951

33 CFR
165 (4 documents) 46888, 46889, 46890, 46891

37 CFR
1 46891

40 CFR
52 (2 documents) 46892, 46894
141 47098
143 47098

Proposed Rules:
51 46952
52 (2 documents) 46953, 46954
141 47115
143 47115

45 CFR

Proposed Rules:
1207 46954
1208 46963
1209 46972
2551 46954
2552 46963
2553 46972

47 CFR

Proposed Rules:
73 (2 documents) 47978, 47979

48 CFR
1504 46898
1542 46898
1552 46898

49 CFR
571 46899

Proposed Rules:
572 (2 documents) 46979, 46981

50 CFR
17 46900
32 46910

Proposed Rules:
679 46993

Rules and Regulations

Federal Register
Vol. 63, No. 171
Thursday, September 3, 1998

This section of the FEDERAL REGISTER contains regulatory documents having general applicability and legal effect, most of which are keyed to and codified in the Code of Federal Regulations, which is published under 50 titles pursuant to 44 U.S.C. 1510.

The Code of Federal Regulations is sold by the Superintendent of Documents. Prices of new books are listed in the first FEDERAL REGISTER issue of each week.

DEPARTMENT OF AGRICULTURE

Agricultural Marketing Service

7 CFR Part 920

[Docket No. FV98–920–4 IFR]

Kiwifruit Grown in California; Relaxation of Pack Requirements

AGENCY: Agricultural Marketing Service, USDA.

ACTION: Interim final rule with request for comments.

SUMMARY: This rule relaxes the pack requirements prescribed under the California kiwifruit marketing order. The marketing order regulates the handling of kiwifruit grown in California and is administered locally by the Kiwifruit Administrative Committee (Committee). This rule increases the size variation tolerance for Size 42 kiwifruit and increases the maximum number of fruit per 8-pound sample for Sizes 42 through 30. In addition, it suspends, for the 1998–99 season, the minimum net weight requirements for kiwifruit packed in containers with cell compartments, cardboard fillers, or molded trays. These changes were unanimously recommended by the Committee and are expected to reduce handler packing costs, increase producer returns, and enable handlers to compete more effectively in the marketplace.

DATES: This document is effective September 4, 1998. The suspension of § 920.302(a)(4)(iii) is effective September 4, 1998, through July 31, 1999. Comments received prior to November 2, 1998, will be considered prior to issuance of a final rule.

ADDRESSES: Interested persons are invited to submit written comments concerning this rule. Comments must be sent to the Docket Clerk, Fruit and Vegetable Programs, AMS, USDA, room 2525–S, P.O. Box 96456, Washington, DC 20090–6456; Fax: (202) 205–6632; or E-mail: moabdocketclerk@usda.gov. All comments should reference the docket number and the date and page number of this issue of the **Federal Register** and will be made available for public inspection in the Office of the Docket Clerk during regular business hours.

FOR FURTHER INFORMATION CONTACT: Rose M. Aguayo, Marketing Specialist, California Marketing Field Office, Marketing Order Administration Branch, F&V, AMS, USDA, 2202 Monterey Street, suite 102B, Fresno, California 93721; telephone: (209) 487–5901, Fax: (209) 487–5906; or George Kelhart, Technical Advisor, Marketing Order Administration Branch, Fruit and Vegetable Programs, AMS, USDA, room 2525–S, P.O. Box 96456, Washington, DC 20090–6456; telephone: (202) 720–2491, Fax: (202) 205–6632. Small businesses may request information on compliance with this regulation by contacting Jay Guerber, Marketing Order Administration Branch, Fruit and Vegetable Programs, AMS, USDA, room 2525–S, P.O. Box 96456, Washington, DC 20090–6456; telephone: (202) 720–2491, Fax: (202) 205–6632.

SUPPLEMENTARY INFORMATION: This rule is issued under Marketing Order No. 920, as amended (7 CFR part 920), regulating the handling of kiwifruit grown in California, hereinafter referred to as the ''order.'' The order is effective under the Agricultural Marketing Agreement Act of 1937, as amended (7 U.S.C. 601–674), hereinafter referred to as the ''Act.''

The Department of Agriculture (Department) is issuing this rule in conformance with Executive Order 12866.

This rule has been reviewed under Executive Order 12988, Civil Justice Reform. This rule is not intended to have retroactive effect. This rule will not preempt any State or local laws, regulations, or policies, unless they present an irreconcilable conflict with this rule.

The Act provides that administrative proceedings must be exhausted before parties may file suit in court. Under section 608c(15)(A) of the Act, any handler subject to an order may file with the Secretary a petition stating that the order, any provision of the order, or any obligation imposed in connection with the order is not in accordance with law and request a modification of the order or to be exempted therefrom. A handler is afforded the opportunity for a hearing on the petition. After the hearing the Secretary would rule on the petition. The Act provides that the district court of the United States in any district in which the handler is an inhabitant, or has his or her principal place of business, has jurisdiction to review the Secretary's ruling on the petition, provided an action is filed not later than 20 days after the date of the entry of the ruling.

This rule increases the size variation tolerance for Size 42 kiwifruit and increases the maximum number of fruit per 8-pound sample for Sizes 42 through 30. In addition, it suspends, for the 1998–99 season, the minimum net weight requirements for kiwifruit packed in containers with cell compartments, cardboard fillers, or molded trays. These changes were unanimously recommended by the Committee and are expected to reduce handler packing costs, increase producer returns, and enable handlers to compete more effectively in the marketplace.

Under the terms of the order, fresh market shipments of kiwifruit grown in California are required to be inspected and meet grade, size, maturity, pack, and container requirements. Section 920.52 authorizes the establishment of pack requirements. Section 920.302(a)(4) of the order's administrative rules and regulations outlines pack requirements for fresh shipments of California kiwifruit.

Section 920.302(a)(4)(ii) provides pack requirements for kiwifruit packed in cell compartments, cardboard fillers, or molded trays and includes a table that specifies numerical size designations and size variation tolerances. It also provides pack requirements for kiwifruit packed in bags, volume fill, or bulk containers, and includes a separate table that specifies numerical size designations and size variation tolerances. Paragraph (a)(4)(ii) also provides that not more than 10 percent, by count, of the containers in any lot and not more than 5 percent, by count, of kiwifruit in any one container (except that for Size 42 kiwifruit, the tolerance, by count, in any one container, may not be more than 10 percent, and except that for Size 45 kiwifruit, the tolerance by count, in any one container, may not be more than 25

percent) may fail to meet the requirements of this paragraph.

Section 920.302(a)(4)(iii) provides requirements for fruit packed in containers with cell compartments, cardboard fillers, or molded trays and requires that specific minimum net weights per size designation be met.

Section 920.302(a)(4)(iv) establishes a maximum number of fruit per 8-pound sample for each numerical count size designation for fruit packed in bags, volume fill, or bulk containers.

The amount of kiwifruit supplied to the domestic market by California handlers has declined 22 percent, since the 1992–93 season. In addition, producer prices have steadily declined in spite of a continuous increase in the U.S. per capita consumption of kiwifruit. When the order was implemented in 1984, the average Free-on-Board (FOB) value was $1.14 per pound. This average has steadily decreased to $0.53 per pound for the 1997–98 season. The Committee reviewed FOB values and determined that the average FOB value for the 1992–93 season through the 1997–98 season was $0.55 per pound. To address these concerns, the industry held several industry-wide planning sessions during May and June 1998.

The Committee subsequently met on July 8, 1998, and unanimously recommended modifying the pack regulations under § 920.302 as follows:

(1) Increase the size variation tolerance, from 10 percent, by count, in any one container, to 25 percent, by count, for Size 42 kiwifruit;

(2) Increase the maximum number of fruit per 8-pound sample for Sizes 42, 39, 36, 33, and 30 of kiwifruit packed in bags, volume fill, or bulk containers; and

(3) Temporarily suspend, for the 1998–99 season, the minimum net weight requirements for kiwifruit packed in containers with cell compartments, cardboard fillers, or molded trays.

Increase in Size Variation Tolerance for Size 42 Kiwifruit

Currently, a size variation tolerance of ¼-inch (6.4 mm) difference is allowed between the widest and narrowest kiwifruit in any Size 42 container utilizing cell compartments, cardboard fillers, or molded trays and a ⅜-inch (9.5 mm) size variation difference is allowed between the widest and narrowest kiwifruit packed in a Size 42 bag, volume fill, or bulk container. Not more than 10 percent, by count, of the containers in any lot and not more than 5 percent, by count, of kiwifruit in any container may fail to meet the established size variations for Sizes 39 and larger.

Prior to the 1996–97 season, handlers were experiencing difficulty meeting the size variation tolerances for Sizes 42 and 45 kiwifruit because it is difficult to separate the round, narrow fruit from the flatter, broader fruit. Weight sizers will not separate this fruit because the fruit may weigh exactly the same yet be of different shapes requiring them to be packed into different boxes in order to stay within the size variation requirements. This sizing problem occurs mostly in 40 series fruit where size variations are often indiscernible to the eye and calipers are needed to detect differences. Fruit packed in the 40 series consistently provides lower returns to California producers than larger sized fruit and also is the most costly to pack.

The Committee determined that the best way to address the sizing problem was to increase the size variation tolerance, by count, in any one container, for Sizes 42 and 45 kiwifruit. Section 920.302(a)(4) of the order's administrative rules and regulations was revised by a final rule issued September 19, 1997 (52 FR 49128), to include a provision that increased the size variation tolerance, by count, in any one container, from 5 percent to 10 percent for Size 42 kiwifruit. That rule also increased the size variation tolerance, by count, for Size 45 kiwifruit from 10 percent, by count, to 25 percent, by count.

During the 1997–98 season, the increased size variation tolerances for Sizes 42 and 45 benefitted the industry by easing the packing burden and reducing costs, while maintaining uniform looking boxes of fruit desired by customers.

Since the 1997–98 harvest, the industry held several industry-wide planning sessions and considered ways to reduce handler packing costs, increase producer returns, and enable handlers to compete more effectively in the marketplace.

The three recommendations to relax packing requirements made by the Committee on July 8, 1998, were the final result of these discussions. The recommendation to increase the size variation tolerance for Size 42 fruit from 10 percent, by count, to 25 percent, by count, was made because the Committee realized that increasing the number of fruit in an 8-pound sample for Size 42 fruit would make it difficult for handlers to meet the established size variation requirements. Increasing the size variation tolerance for Size 42 fruit will ease the handler packing burden by adding several more pieces of fruit to the 8-pound sample, and will reduce handler packing costs.

Additionally, increasing the size variation tolerance for Size 42 from 10 percent, by count, to 25 percent, by count, will increase the number of kiwifruit that may exceed the ⅜-inch size variation requirement in bags, volume fill, or bulk containers. When applied to a 22-pound volume fill container, this increase in the size variation tolerance will allow approximately 37 pieces of fruit out of 146 to exceed the ⅜-inch tolerance versus 15 pieces of fruit per 22-pound volume fill container at the current 10 percent tolerance level.

Very little Size 42 kiwifruit is packed in single layer containers with cell compartments, cardboard fillers, or molded trays. However, Size 42 fruit is packed in 3-layer containers with cell compartments, cardboard fillers, or molded trays. Increasing the size variation tolerance to 25 percent, by count, will allow approximately 31 pieces of fruit out of 126 to exceed the ¼-inch tolerance versus the 12 pieces of fruit per 3-layer container at the current 10 percent tolerance level. Increasing the size variation tolerance for Size 42 fruit will reduce packing costs.

The Committee expects that increasing the size variation tolerance for Size 42 kiwifruit will reduce packing costs because the additional tolerance will make it easier to pack round and flat Size 42 fruit without slowing down the packing line. The Committee anticipates that producer returns will increase as a portion of the fruit previously packed as Size 45 will be able to be packed as Size 42. Approximately 75 percent of all California kiwifruit is shipped in 22-pound volume fill containers. Retailers pay approximately $1.14 more for a 22-pound volume fill container of Size 42 fruit than for a similar container of Size 45 fruit. Lastly, the Committee expects this change to benefit the industry by providing retailers and consumers with uniform containers of kiwifruit.

Increasing the Maximum Number of Fruit per 8-Pound Sample

Currently, under the rules and regulations, kiwifruit packed in bags, volume fill, or bulk containers, must not exceed the maximum number of fruit per an 8-pound sample per numerical count size designation.

The Committee determined that increasing the maximum number of fruit per 8-pound sample for Sizes 42 through 30 will increase the number of fruit packed in each bag, volume-fill, or bulk container and will help lessen the sizing differences between California

and imported kiwifruit. The Committee believes that lessening the size differences should help California handlers compete more effectively in the marketplace.

The Committee unanimously recommended increasing the maximum number of fruit per 8-pound sample as shown in the following chart:

Tray equivalency size designation	Maximum number of fruit per 8 pound sample
21	22
25	27
27/28	30
30	33 (32)*
33	36 (35)*
36	42 (40)*
39	48 (45)*
42	53 (50)*
45	55

* Prior number of fruit per 8-pound sample.

This chart is commonly referred to as the ''Size Designation Chart'' in the industry. Increasing the maximum number of fruit per 8-pound sample will allow some smaller-sized fruit to be packed into a larger-size category. This rule allows three more pieces of fruit to be packed per 8-pound sample in Sizes 42 and 39, two more pieces of fruit to be packed in Size 36, and one more piece of fruit to be packed in Sizes 33 and 30. It also reduces the percentage of fruit packed in the 40 series and increases the percentage of fruit packed in sizes 39 and 36, which are the preferred sizes by U.S. retail. Thus, handlers will be better able to meet the needs of buyers, because kiwifruit sells by the piece, and buyers desire as much fruit in each container as the container can comfortably hold. This change does not affect the minimum size and will not allow fruit currently considered as ''undersized'' to be packed. The Committee further believes that increasing the maximum number of fruit in the 8-pound sample will help lessen the sizing differences between California and imported kiwifruit. Lessening the size differences should help California handlers compete more effectively in the marketplace.

Minimum Net Weight Requirements

Currently, fruit packed in containers with cell compartments, cardboard fillers, or molded trays are required to meet the minimum net weight requirements as shown in the following chart:

Count designation of fruit	Minimum net weight of fruit (Pounds)
34 or larger	7.5
35 to 37	7.25
38 to 40	6.875
41 to 43	6.75
44 and smaller	6.5

Prior to the 1989–90 season, tray weights were voluntary and 73.5 percent of the crop was packed in trays. During the 1989–90 season, tray weights were mandated, as there were many new packers involved in the kiwifruit packing process and stricter regulations were viewed as necessary to provide uniform container weights by size. However, since that season less and less fruit has been tray packed.

During the 1997–98 season, only 15.5 percent of the crop was packed into molded trays (singles and three-layers) and less than 1 percent of this fruit was rejected for failure to meet minimum tray weights. As a consequence, the Committee believes that minimum tray weight requirements may no longer be necessary to maintain uniformity in the marketplace. It further believes that suspension of this requirement will help reduce tray pack packing costs for both large and small handlers. Therefore, the Committee unanimously recommended that minimum net weights for kiwifruit packed in cell compartments, cardboard fillers, or molded trays be temporarily suspended for the 1998–99 season. The recommended suspension is for one season so the effects of the suspension can be evaluated. The Committee further recommended that this suspension begin no later than September 20, 1998, to enable handlers to make operational decisions in time for the 1998–99 harvest and shipping season. The 1998–99 season ends July 31, 1999.

Initial Regulatory Flexibility Analysis

Pursuant to requirements set forth in the Regulatory Flexibility Act (RFA), the Agricultural Marketing Service (AMS) has considered the economic impact of this action on small entities. Accordingly, AMS has prepared this initial regulatory flexibility analysis.

The purpose of the RFA is to fit regulatory actions to the scale of business subject to such actions in order that small businesses will not be unduly or disproportionately burdened. Marketing orders issued pursuant to the Act, and the rules issued thereunder, are unique in that they are brought about through group action of essentially small entities acting on their own behalf. Thus, both statutes have small entity orientation and compatibility.

There are approximately 60 handlers of California kiwifruit subject to regulation under the marketing order and approximately 450 producers in the production area. Small agricultural producers are defined by the Small Business Administration (13 CFR 121.601) as those whose annual receipts are less than $500,000, and small agricultural service firms are defined as those whose annual receipts are less than $5,000,000. One of the 60 handlers subject to regulation has annual kiwifruit receipts of at least $5,000,000. This figure excludes receipts from any other sources. The remaining 59 handlers have annual receipts less than $5,000,000, excluding receipts from other sources. In addition, 10 of the 450 producers subject to regulation have annual sales of at least $500,000, excluding receipts from any other sources. The remaining 440 producers have annual sales less than $500,000, excluding receipts from any other sources. Therefore, a majority of the kiwifruit handlers and producers may be classified as small entities.

This rule increases the size variation tolerance for Size 42 kiwifruit and increases the maximum number of fruit per 8-pound sample for Sizes 42 through 30. In addition, it suspends, for the 1998–99 season, the minimum net weight requirements for kiwifruit packed in containers with cell compartments, cardboard fillers, or molded trays. These changes were unanimously recommended by the Committee and are expected to reduce handler packing costs, increase producer returns, and enable handlers to compete more effectively in the marketplace.

Under the terms of the order, fresh market shipments of kiwifruit grown in California are required to be inspected and meet grade, size, maturity, pack, and container requirements. Section 920.52 authorizes the establishment of pack requirements. Section 920.302(a)(4) of the order's administrative rules and regulations outlines pack requirements for fresh shipments of California kiwifruit.

Section 920.302(a)(4)(ii) provides pack requirements for kiwifruit packed in cell compartments, cardboard fillers, or molded trays and includes a table that specifies numerical size designations and size variation tolerances. It also provides pack requirements for kiwifruit packed in bags, volume fill, or bulk containers, and includes a separate table that specifies numerical size designations and size variation tolerances. Paragraph (a)(4)(ii) provides that not more than 10 percent, by count, of the containers in

any lot and not more than 5 percent, by count, of kiwifruit in any one container (except that for Size 42 kiwifruit, the tolerance, by count, in any one container, may not be more than 10 percent, and except that for Size 45 kiwifruit, the tolerance, by count, in any one container, may not be more than 25 percent) may fail to meet the requirements of this paragraph.

Section 920.302(a)(4)(iii) provides requirements for fruit packed in containers with cell compartments, cardboard fillers, or molded trays and requires that specific minimum net weights per size designation be met.

Section 920.302(a)(4)(iv) establishes a maximum number of fruit per 8-pound sample for each numerical count size designation for fruit packed in bags, volume fill, or bulk containers.

The amount of kiwifruit supplied to the domestic market by California handlers has declined 22 percent since the 1992–93 season. In addition, producer prices have steadily declined, in spite of a continuous increase in the U.S. per capita consumption of kiwifruit. When the order was implemented in 1984, the average Free-on-Board (FOB) value was $1.14 per pound. This average has steadily decreased to $0.53 per pound for the 1997–98 season. The Committee reviewed FOB values and determined that the average FOB value for the 1992–93 season through the 1997–98 season was $0.55 per pound. To address these concerns, the industry held several industry-wide planning sessions during May and June 1998.

The Committee subsequently met on July 8, 1998, and unanimously recommended modifying § 920.302 of the order's administrative rules and regulations to make the following changes:

(1) Increase the size variation tolerance, from 10 percent, by count, in any one container, to 25 percent, by count, for Size 42 kiwifruit;

(2) Increase the maximum number of fruit per 8-pound sample for Sizes 42, 39, 36, 33, and 30 of kiwifruit packed in bags, volume fill, or bulk containers; and

(3) Temporarily suspend, for the 1998–99 season, the minimum net weight requirements for kiwifruit packed in containers with cell compartments, cardboard fillers, or molded trays.

Increase in Size Variation Tolerance for Size 42 Kiwifruit

Currently, a size variation tolerance of ¼-inch (6.4 mm) difference is allowed between the widest and narrowest kiwifruit in any Size 42 container utilizing cell compartments, cardboard fillers, or molded trays and a ⅜-inch (9.5 mm) size variation difference is allowed between the widest and narrowest kiwifruit packed in a Size 42 bag, volume fill, or bulk container. Not more than 10 percent, by count, of the containers in any lot and not more than 5 percent, by count, of kiwifruit in any container may fail to meet the established size variations for Sizes 39 and larger.

Prior to the 1996–97 season, handlers were experiencing difficulty meeting the size variation tolerances for Sizes 42 and 45 kiwifruit because it is difficult to separate the round, narrow fruit from the flatter, broader fruit. Weight sizers will not separate this fruit because the fruit may weigh exactly the same yet be of different shapes requiring them to be packed into different containers in order to stay within the size variation requirements. This sizing problem occurs mostly in 40 series fruit where size variations are often indiscernible to the eye and calipers are needed to detect differences. Fruit packed in the 40 series consistently provides lower returns to California producers than larger sized fruit and also is the most costly to pack.

The Committee determined that the best way to address the sizing problem was to increase the size variation tolerance, by count, in any one container, for Sizes 42 and 45 kiwifruit. Section 920.302(a)(4) of the order's administrative rules and regulations was revised by a final rule issued September 19, 1997 (52 FR 49128) to include a provision that increased the size variation tolerance, by count, in any one container, from 5 percent to 10 percent for Size 42 kiwifruit. That rule also increased the size variation tolerance, by count, for Size 45 kiwifruit from 10 percent, by count, to 25 percent, by count.

During the 1997–98 season, the increased size variation tolerances for Sizes 42 and 45 benefitted the industry by easing the packing burden and reducing costs, while maintaining uniform looking boxes of fruit desired by customers.

Since the 1997–98 harvest, the industry has held several industry-wide planning sessions and considered ways to reduce handler packing costs, increase producer returns, and enable handlers to compete more effectively in the marketplace. The three recommendations to relax pack requirements made by the Committee on July 8, 1998, were the final result of these discussions. The recommendation to increase the size variation tolerance for Size 42 fruit from 10 percent, by count, to 25 percent, by count, was made because the Committee realized that increasing the number of fruit in an 8-pound sample for Size 42 fruit would make it difficult to meet the established size variation requirements. Increasing the size variation tolerance for Size 42 fruit will ease the packing burden created by adding several more pieces of fruit to the 8-pound sample, and will reduce handler packing costs.

Additionally, increasing the size variation tolerance for Size 42 from 10 percent, by count, to 25 percent, by count, will increase the number of kiwifruit that may exceed the 3/8-inch (9.5 mm) size variation requirement in bags, volume fill, or bulk containers. When applied to a 22-pound volume fill container, this increase in the size variation tolerance will allow approximately 37 pieces of fruit out of 146 to exceed the 3/8-inch (9.5 mm) tolerance versus 15 pieces of fruit per 22-pound volume fill container at the current 10 percent tolerance level.

Very little Size 42 kiwifruit is packed in single layer containers with cell compartments, cardboard fillers, or molded trays. However, Size 42 fruit is packed in 3-layer containers with cell compartments, cardboard fillers, or molded trays. Increasing the size variation tolerance to 25 percent, by count, will allow approximately 31 pieces of fruit out of 126 to exceed the 1/4-inch (6.4 mm) tolerance versus the 12 pieces of fruit per 3-layer container at the current 10 percent tolerance level.

The impact of this change on producers and handlers is expected to be beneficial for all levels of business, but especially beneficial for small businesses. Often times, the very small packing operations have older, outdated sizing equipment which makes it difficult to size kiwifruit as precisely as to what the order's rules and regulations require. More hand labor is required in order to ''fine tune'' the sizing process. More hand labor slows the packing line and increases packing costs.

The Committee expects that increasing the size variation tolerance for Size 42 kiwifruit will reduce packing costs because the additional tolerance will make it easier to pack round and flat Size 42 fruit without slowing down the packing line. Additionally, the Committee expects producer returns to increase as a portion of the fruit previously packed as Size 45 will be able to be packed as Size 42. Approximately 75 percent of all kiwifruit is shipped in 22-pound volume fill containers. Retailers pay approximately $1.14 more for a 22-pound volume fill container of Size 42 fruit than for a similar container of Size 45 fruit. Lastly, the Committee expects

this change will benefit the industry by providing retailers and consumers with uniform containers of kiwifruit.

Increasing the Maximum Number of Fruit per 8-Pound Sample

Currently, under the rules and regulations, kiwifruit packed in bags, volume fill, or bulk containers, must not exceed the maximum number of fruit per an 8-pound sample per numerical count size designation.

The Committee determined that increasing the maximum number of fruit per 8-pound sample for Sizes 42 through 30 will increase the number of fruit packed in each bag, volume-fill, or bulk container and will help lessen the sizing differences between California and imported kiwifruit. The Committee believes lessening the size differences should help California handlers compete more effectively in the marketplace.

The Committee unanimously recommended increasing the maximum number of fruit per 8-pound sample as shown in the following chart:

Tray equivalency size designation	Maximum number of fruit per 8 pound sample
21	22
25	27
27/28	30
30	*33 (32)
33	*36 (35)
36	*42 (40)
39	*48 (45)
42	*53 (50)
45	55

*Prior number of fruit per 8-pound sample.

This chart is commonly referred to as the ''Size Designation Chart'' in the industry. Increasing the maximum number of fruit per 8-pound sample will allow some smaller-sized fruit to be packed into a larger-size category. This rule allows three more pieces of fruit to be packed per 8-pound sample in Sizes 42 and 39, two more pieces of fruit to be packed in Size 36, and one more piece of fruit to be packed in Sizes 33 and 30. It also reduces the percentage of fruit packed in the 40 series and increases the percentage of fruit packed in sizes 39 and 36, which are the preferred sizes by U.S. retail. Thus, handlers will be better able to meet the needs of buyers because kiwifruit sells by the piece and buyers desire more fruit in each container. This change does not affect the minimum size and will not allow fruit currently considered as ''undersized'' to be packed. The Committee believes increasing the maximum number of fruit in the 8-pound sample will help lessen the sizing differences between California and imported kiwifruit. Lessening the size differences should help California handlers compete more effectively in the marketplace.

The increase in the maximum number of fruit per 8-pound sample is not so significant that consumers or retailers will notice a visual size difference in the fruit being offered. The California Kiwifruit Commission, which administers a State program utilized to promote kiwifruit grown in California, has conducted kiwifruit sizing studies over the past 4 years. These studies show that there is only an average of 3/32-inch to 4/32-inch difference in fruit length between sizes, and 2/32-inch to 3/32-inch difference in fruit width. These differences are indistinguishable to the eye.

Further, the 1998–99 crop is expected to approximate the 1997–98 crop. The Committee estimated that utilizing the new size designations will yield the California kiwifruit industry $32,106,395 in FOB value versus the $30,931,451 received for the 1997–98 season. This is an additional $1.17 million in FOB value for the 1998–99 season.

The Committee anticipates that these changes will equally benefit small and large businesses, enable handlers to compete more effectively in the marketplace, and help increase producer returns.

Minimum Net Weight Requirements

Currently, fruit packed in containers with cell compartments, cardboard fillers, or molded trays are required to meet the minimum net weight requirements as shown in the following chart:

Count designation of fruit	Minimum net weight of fruit (Pounds)
34 or larger	7.5
35 to 37	7.25
38 to 40	6.875
41 to 43	6.75
44 and smaller	6.5

Prior to the 1989–90 season, tray weights were voluntary and 73.5 percent of the crop was packed in trays. During the 1989–90 season, tray weights were mandated, as there were many new packers involved in the kiwifruit packing process and stricter regulations were viewed as necessary to provide uniformity in tray weights. However, since that season less and less fruit has been packed in tray style packs.

During the 1997–98 season, only 15.5 percent of the crop was packed into molded trays (singles and three-layers) and less than 1 percent of this fruit was rejected for failure to meet minimum tray weights. As a consequence, the Committee believes that minimum tray weight requirements may no longer be needed to assure uniform container weights in the marketplace. It further believes that suspension of this requirement will help reduce packing costs for both large and small handlers. Therefore, the Committee unanimously recommended that the minimum net weights for kiwifruit packed in cell compartments, cardboard fillers, or molded trays be temporarily suspended for the 1998–99 season. The recommended suspension is for one season so the effects can be evaluated. The Committee further recommended that the suspension begin no later than September 20, 1998, to enable handlers to make operational decisions in time for the 1998–99 harvest and shipping season. The 1998–99 season ends July 31, 1999.

Packing costs for handlers for a 22-pound volume fill container range from approximately $0.25 to $0.75 per container. It is anticipated that the potential cost savings per 22-pound volume fill container will be around $0.01. The crop estimate for the 1998–99 season is 2,705,000, 22-pound volume fill container equivalents. It is estimated that the three recommended changes could result in a potential savings in packing costs for handlers of approximately $27,000 during the 1998–99 season. The Committee and the Federal-State Inspection Service determined that these changes will not result in a reduction in inspection costs as the inspection process is essentially the same.

There is wide-spread agreement in the industry for the need to relax pack requirements. The Committee considered other alternatives to relaxing packing requirements but determined that these suggestions will not adequately address the industry's problems.

One suggestion was to suspend all pack requirements and to make all pack requirements voluntary. Another suggestion was to terminate the order. The Committee did not adopt these suggestions because it believes they will result in a vast array of packs without uniformity, and that this will cause disorderly marketing and confusion in the marketplace. The Committee wants to maintain the reputation California has established for uniformly packed containers of kiwifruit to prevent such problems.

Another suggestion presented was that the size markings should be based

on the number of pieces of fruit per pound. The Committee did not adopt this suggestion because it believes such marking practices would continue to cause inconsistencies in the marketplace. The Committee considered a suggestion to lower the minimum maturity requirement, but determined that the current minimum maturity requirement of 6.5 percent soluble solids was appropriate and should remain unchanged.

Another suggestion presented was to reduce the number of size designations. Some Committee members thought that fewer size designations might lessen confusion in the marketplace. The Committee did not adopt this suggestion because retailers are familiar with the various size designations utilized by handlers and have not expressed concerns with the number of size designations.

After considering these alternatives, the Committee recommended increasing the size variation tolerance for Size 42 kiwifruit, increasing the maximum number of fruit per 8-pound sample for Sizes 42 through 30, and suspending, for the 1998–99 season, the minimum tray weight requirements for kiwifruit packed in cell compartments, cardboard fillers, or molded trays. The Committee expects these relaxations to pack requirements to reduce handler packing costs, increase producer returns, and enable handlers to compete more effectively in the marketplace.

These changes address the marketing and shipping needs of the kiwifruit industry and are in the interest of handlers, producers, buyers, and consumers. The impact of these changes on producers and handlers is expected to be beneficial for all levels of business.

This rule will not impose any additional reporting or recordkeeping requirements on either small or large kiwifruit handlers. As with all Federal marketing order programs, reports and forms are periodically reviewed to reduce information requirements and duplication by industry and public sectors. In addition, the Department has not identified any relevant Federal rules that duplicate, overlap, or conflict with this rule.

Further, the Committee's meeting was widely publicized throughout the kiwifruit industry and all interested persons were invited to attend the meeting and participate in Committee deliberations. Like all Committee meetings, the July 8, 1998, meeting was a public meeting and all entities, both large and small, were able to express their views on this issue. The Committee itself is composed of 12 members. Three of these members are handlers and producers, eight are producers only, and one is a public member. The majority of the Committee members are small entities.

Finally, interested persons are invited to submit information on the regulatory and informational impacts of this action on small businesses.

After consideration of all relevant material presented, including the Committee's recommendation, and other information, it is found that this interim final rule, as hereinafter set forth, will tend to effectuate the declared policy of the Act.

This rule invites comments on a relaxation of two pack requirements and the suspension of the minimum net weight requirements currently prescribed under the California kiwifruit marketing order. Any comments received will be considered prior to finalization of this rule.

Pursuant to 5 U.S.C. 553, it is also found and determined upon good cause that it is impracticable, unnecessary, and contrary to the public interest to give preliminary notice prior to putting this rule into effect and that good cause exists for not postponing the effective date of this rule until 30 days after publication in the **Federal Register** because: (1) This rule relaxes pack requirements; (2) the 1998–99 harvest is expected to begin the end of September, and this rule should be in effect before that time so producers and handlers can make plans to operate under the relaxed requirements; (3) the Committee unanimously recommended these changes at a public meeting and interested parties had an opportunity to provide input; and (4) this rule provides a 60-day comment period and any comments received will be considered prior to finalization of this rule.

List of Subjects in 7 CFR Part 920

Kiwifruit, Marketing agreements, Reporting and recordkeeping requirements.

For the reasons set forth in the preamble, 7 CFR part 920 is amended as follows:

PART 920—KIWIFRUIT GROWN IN CALIFORNIA

1. The authority citation for 7 CFR part 920 continues to read as follows:

Authority: 7 U.S.C. 601–674.

2. Section 920.302 is amended by suspending paragraph (a)(4)(iii) effective September 4, 1998, through July 31, 1999, and revising the last sentence of paragraph (a)(4)(ii), and the table in paragraph (a)(4)(iv) to read as follows:

§ 920.302 Grade, size, pack, and container regulations.

(a)* * *

(4)* * *

(ii)* * * Not more than 10 percent, by count of the containers in any lot and not more than 5 percent, by count, of kiwifruit in any container, (except that for Sizes 42 and 45 kiwifruit, the tolerance, by count, in any one container, may not be more than 25 percent) may fail to meet the requirements of this paragraph.

* * * * *

(iv) * * *

Column 1 numerical count size designation	Column 2 maximum number of fruit per 8–pound sample
21	22
25	27
27/28	30
30	33
33	36
36	42
39	48
42	53
45	55

* * * * *

Dated: August 28, 1998.

Robert C. Keeney,

Deputy Administrator, Fruit and Vegetable Programs.

[FR Doc. 98–23711 Filed 9–2–98; 8:45 am]

BILLING CODE 3410–02–P

DEPARTMENT OF AGRICULTURE

Agricultural Marketing Service

7 CFR Part 1106

[DA–98–08]

Milk in the Southwest Plains Marketing Area; Suspension of Certain Provisions of the Order

AGENCY: Agricultural Marketing Service, USDA.

ACTION: Final rule; suspension.

SUMMARY: This document suspends certain sections of the Southwest Plains Federal milk marketing order. The suspension removes portions of the supply plant shipping standard and the producer milk delivery requirement. The suspension, which was requested by Kraft Foods, Inc. (Kraft), is necessary to prevent uneconomic and inefficient movements of milk and to ensure that producers historically associated with the market will continue to have their milk pooled under the Southwest Plains order.

EFFECTIVE DATE: September 1, 1998, through August 31, 1999.

FOR FURTHER INFORMATION CONTACT: Nicholas Memoli, Marketing Specialist, USDA/AMS/Dairy Programs, Order Formulation Branch, Room 2971, South Building, P.O. Box 96456, Washington, DC 20090–6456, (202) 690–1932, e-mail address Nicholas__Memoli@usda.gov.

SUPPLEMENTARY INFORMATION: Prior document in this proceeding:

Notice of Proposed Suspension: Issued August 6, 1998; published August 12, 1998 (63 FR 43125).

The Department is issuing this final rule in conformance with Executive Order 12866.

This final rule has been reviewed under Executive Order 12988, Civil Justice Reform. This rule is not intended to have a retroactive effect. This rule will not preempt any state or local laws, regulations, or policies, unless they present an irreconcilable conflict with this rule.

The Agricultural Marketing Agreement Act of 1937, as amended (7 U.S.C. 601–674), provides that administrative proceedings must be exhausted before parties may file suit in court. Under section 608c(15)(A) of the Act, any handler subject to an order may request modification or exemption from such order by filing with the Secretary a petition stating that the order, any provision of the order, or any obligation imposed in connection with the order is not in accordance with the law. A handler is afforded the opportunity for a hearing on the petition. After a hearing, the Secretary would rule on the petition. The Act provides that the district court of the United States in any district in which the handler is an inhabitant, or has its principal place of business, has jurisdiction in equity to review the Secretary's ruling on the petition, provided a bill in equity is filed not later than 20 days after the date of the entry of the ruling.

Small Business Consideration

In accordance with the Regulatory Flexibility Act (5 U.S.C. 601 *et seq.*), the Agricultural Marketing Service has considered the economic impact of this action on small entities and has certified that this rule will not have a significant economic impact on a substantial number of small entities. For the purpose of the Regulatory Flexibility Act, a dairy farm is considered a ''small business'' if it has an annual gross revenue of less than $500,000, and a dairy products manufacturer is a ''small business'' if it has fewer than 500 employees. For the purposes of determining which dairy farms are ''small businesses,'' the $500,000 per year criterion was used to establish a production guideline of 326,000 pounds per month. Although this guideline does not factor in additional monies that may be received by dairy producers, it should be an inclusive standard for most ''small'' dairy farmers. For purposes of determining a handler's size, if the plant is part of a larger company operating multiple plants that collectively exceed the 500-employee limit, the plant will be considered a large business even if the local plant has fewer than 500 employees.

For the month of June 1998, 2,187 dairy farmers were producers under Order 106. Of these producers, 2,138 producers (i.e., 98%) were considered small businesses. For the same month, 16 handlers were pooled under Order 106. Two of these handlers were considered small businesses.

The supply plant shipping standard and the producer milk delivery requirement are designed to attract an adequate supply of milk to the market to meet fluid needs. This final rule will allow a supply plant that has been associated with the Southwest Plains market during the months of September 1997 through January 1998 to qualify as a pool plant without shipping any milk to a pool distributing plant during the following months of September 1998 through August 1999. The rule will also suspend the requirement that producers deliver at least one day's production of milk to a pool distributing plant during the month before their milk is eligible to be diverted to nonpool plants.

Marketing conditions in the Southwest Plains order indicate that there should be a sufficient amount of local milk available during the requested suspension period to supply the fluid needs of the market. Therefore, supplemental milk supplies should not be needed. Thus, this rule lessens the regulatory impact of the order on certain milk handlers and tends to ensure that dairy farmers will continue to have their milk priced under the order and thereby receive the benefits that accrue from such pricing.

This order of suspension is issued pursuant to the provisions of the Agricultural Marketing Agreement Act and of the order regulating the handling of milk in the Southwest Plains marketing area.

Statement of Consideration

This rule suspends portions of the supply plant shipping standard and producer milk diversion rules of the Southwest Plains order for the period of September 1998 through August 1999. The suspension will allow a supply plant that has been associated with the Southwest Plains order during the months of September 1997 through January 1998 to qualify as a pool plant without shipping any milk to a pool distributing plant during the months of September 1998 through August 1999. Without the suspension, a supply plant would be required to ship 50 percent of its producer receipts to pool distributing plants during the months of September through January and 20 percent of its producer receipts to pool distributing plants during the months of February through August to qualify as a pool plant under the order.

The rule also suspends the requirement that producers deliver at least one day's production during the month to a pool plant before their milk is eligible for diversion to a nonpool plant. By suspending this provision, producer milk will not be required to be delivered to pool plants before going to unregulated manufacturing plants.

According to Kraft's letter requesting the suspension, supplemental milk supplies will not be needed to meet the fluid needs of distributing plants. Kraft anticipates that there will be an adequate supply of producer milk available directly from producers' farms in the general area of distributing plants to meet the Class I needs of the market. The handler notes that the supply plant shipping provision and the producer milk delivery requirement have been suspended since 1993 and 1992, respectively.

Kraft states there is no need to require producers located some distance from pool distributing plants to deliver their milk to a pool distributing plant when their milk can more economically be diverted directly to manufacturing plants in the production area. Thus, the handler contends the suspension is necessary to prevent the uneconomic movements of milk and to ensure producers historically associated with the Order 106 market will continue to have their milk pooled under the order.

A notice of proposed rulemaking was published in the **Federal Register** on August 12, 1998 (63 FR 43125), concerning the proposed suspension. Interested persons were afforded an opportunity to file written data, views and arguments thereon. One comment was received supporting the proposed suspension.

Kraft filed a comment reiterating its support for the suspension. No comments were filed in opposition to the suspension.

As noted by Kraft in its letter requesting the suspension, the supply plant shipping standard and the producer milk delivery requirement

have been suspended for a number of years. Market conditions in the Order 106 marketing area indicate that there should be sufficient amounts of milk available in the local area to meet the fluid needs of the order for the requested time period. Therefore, supplemental milk supplies should not be needed.

Accordingly, the suspension is found to be necessary for the purposes of assuring that producers' milk will not have to be moved in an inefficient manner and to assure that producers whose milk has long been associated with the Southwest Plains marketing area will continue to benefit from pooling and pricing under the order.

After consideration of all relevant material, including the proposal in the notice, the comment received, and other available information, it is hereby found and determined that for the months of September 1, 1998, through August 31, 1999, the following provisions of the order do not tend to effectuate the declared policy of the Act:

In § 1106.6, the words ''during the month''.

In § 1106.7(b)(1), beginning with the words ''of February through August'' and continuing to the end of the paragraph.

In § 1106.13, paragraph (d)(1) in its entirety.

It is hereby found and determined that thirty days' notice of the effective date hereof is impractical, unnecessary and contrary to the public interest in that:

(a) The suspension is necessary to reflect current marketing conditions and to assure orderly marketing conditions in the marketing area, in that such rule is necessary to permit the continued pooling of the milk of dairy farmers who have historically supplied the market without the need for making costly and inefficient movements of milk;

(b) This suspension does not require of persons affected substantial or extensive preparation prior to the effective date; and

(c) Notice of proposed rulemaking was given interested parties and they were afforded opportunity to file written data, views or arguments concerning this suspension. One comment supporting the suspension was received.

Therefore, good cause exists for making this order effective less than 30 days from the date of publication in the **Federal Register**.

List of Subjects in 7 CFR Part 1106

Milk marketing orders.

For the reasons set forth in the preamble, 7 CFR part 1106 is amended as follows:

PART 1106—MILK IN THE SOUTHWEST PLAINS MARKETING AREA

1. The authority citation for 7 CFR part 1106 continues to read as follows:

Authority: 7 U.S.C. 601–674.

§ 1106.6 [Suspended in part]

2. In § 1106.6, the words ''during the month'' are suspended.

§ 1106.7 [Suspended in part]

3. In § 1106.7 paragraph (b)(1), the words beginning with ''of February through August'' and continuing to the end of the paragraph are suspended.

§ 1106.13 [Suspended in part]

4. In § 1106.13, paragraph (d)(1) is suspended in its entirety.

Dated: August 27, 1998.

Richard M. McKee,

Deputy Administrator, Dairy Programs.

[FR Doc. 98–23710 Filed 9–2–98; 8:45 am]

BILLING CODE 3410–02–P

DEPARTMENT OF TRANSPORTATION

Federal Aviation Administration

14 CFR Part 39

[Docket No. 95–CE–64–AD; Amendment 39–10729; AD 98–18–13]

RIN 2120–AA64

Airworthiness Directives; SOCATA—Groupe AEROSPATIALE Models TB20 and TB21 Airplanes

AGENCY: Federal Aviation Administration, DOT.

ACTION: Final rule.

SUMMARY: This amendment adopts a new airworthiness directive (AD) that applies to certain SOCATA—Groupe AEROSPATIALE (Socata) Models TB20 and TB21 airplanes. This AD requires repetitively inspecting the main landing gear (MLG) attachment bearing (using a dye penetrant method) for cracks, and if cracks are found, replacing the bearing. This AD is the result of mandatory continuing airworthiness information (MCAI) issued by the airworthiness authority for France. The actions specified by this AD are intended to detect and correct cracks in the MLG attachment bearing, which could result in collapse of the main landing gear during taxi and landing operations.

DATES: Effective October 24, 1998.

The incorporation by reference of certain publications listed in the regulations is approved by the Director of the Federal Register as of October 24, 1998.

ADDRESSES: Service information that applies to this AD may be obtained from the SOCATA—Groupe AEROSPATIALE, Socata Product Support, Aerodrome Tarbes-Ossun-Lourdes, B P 930—F65009 Tarbes Cedex, France; telephone: 33.5.62.41.76.52; facsimile: 33.5.62.41.76.54; or the Product Support Manager, SOCATA—Groupe AEROSPATIALE, North Perry Airport, 7501 Pembroke Road, Pembroke Pines, Florida 33023; telephone: (954) 964–6877; facsimile: (954) 964–1668. This information may also be examined at the Federal Aviation Administration (FAA), Central Region, Office of the Regional Counsel, Attention: Rules Docket No. 95–CE–64–AD, Room 1558, 601 E. 12th Street, Kansas City, Missouri 64106; or at the Office of the Federal Register, 800 North Capitol Street, NW, suite 700, Washington, DC.

FOR FURTHER INFORMATION CONTACT: Mr. Karl Schletzbaum, Aerospace Engineer, FAA, Small Airplane Directorate, 1201 Walnut Street, suite 900, Kansas City, Missouri 64106; telephone: (816) 426–6934; facsimile: (816) 426–2169.

SUPPLEMENTARY INFORMATION:

Events Leading to the Issuance of This AD

A proposal to amend part 39 of the Federal Aviation Regulations (14 CFR part 39) to include an AD that would apply to certain Socata Models TB20 and TB21 airplanes was published in the **Federal Register** as a notice of proposed rulemaking (NPRM) on June 26, 1998 (63 FR 34830). The NPRM proposed to require repetitively inspecting (using a dye penetrant method) for cracks on the MLG attachment bearing. If cracks are found, the NPRM proposed to require replacing the cracked attachment bearing. Accomplishment of the proposed actions as specified in the NPRM would be in accordance with Socata Service Bulletin No. SB 10–080 57, Amdt. 2, dated November 1995.

The NPRM was the result of mandatory continuing airworthiness information (MCAI) issued by the airworthiness authority for France.

Interested persons have been afforded an opportunity to participate in the making of this amendment. No comments were received on the proposed rule or the FAA's determination of the cost to the public.

The FAA's Determination

After careful review of all available information related to the subject presented above, the FAA has determined that air safety and the

public interest require the adoption of the rule as proposed except for minor editorial corrections. The FAA has determined that these minor corrections will not change the meaning of the AD and will not add any additional burden upon the public than was already proposed.

Cost Impact

The FAA estimates that 199 airplanes in the U.S. registry will be affected by this AD.

Accomplishing the inspection will take approximately 4 workhours per airplane, and the average labor rate is approximately $60 an hour. Based on these figures, the total cost impact of the inspection on U.S. operators is estimated to be $47,760, or $240 per airplane.

The replacement will take approximately 1 workhour to replace the bearing, if necessary, at an average labor rate of $60 per hour. Parts cost approximately $800 per airplane. Based on these figures, the total cost impact of the modification on U.S. operators is estimated to be $171,140, or $860 per airplane.

The FAA has no way to determine the number of repetitive inspections that will be incurred over the life of the airplane.

Regulatory Impact

The regulations adopted herein will not have substantial direct effects on the States, on the relationship between the national government and the States, or on the distribution of power and responsibilities among the various levels of government. Therefore, in accordance with Executive Order 12612, it is determined that this final rule does not have sufficient federalism implications to warrant the preparation of a Federalism Assessment.

For the reasons discussed above, I certify that this action (1) is not a ''significant regulatory action'' under Executive Order 12866; (2) is not a ''significant rule'' under DOT Regulatory Policies and Procedures (44 FR 11034, February 26, 1979); and (3) will not have a significant economic impact, positive or negative, on a substantial number of small entities under the criteria of the Regulatory Flexibility Act. A copy of the final evaluation prepared for this action is contained in the Rules Docket. A copy of it may be obtained by contacting the Rules Docket at the location provided under the caption **ADDRESSES**.

List of Subjects in 14 CFR Part 39

Air transportation, Aircraft, Aviation safety, Incorporation by reference, Safety.

Adoption of the Amendment

Accordingly, pursuant to the authority delegated to me by the Administrator, the Federal Aviation Administration amends part 39 of the Federal Aviation Regulations (14 CFR part 39) as follows:

PART 39—AIRWORTHINESS DIRECTIVES

1. The authority citation for part 39 continues to read as follows:

Authority: 49 U.S.C. 106(g), 40113, 44701.

§ 39.13 [Amended]

2. Section 39.13 is amended by adding a new airworthiness directive (AD) to read as follows:

98–18–13 Socata—Groupe Aerospatiale: Amendment 39–10729; Docket No. 95–CE–64–AD.

Applicability: Models TB20 and TB21 airplanes, serial numbers 1 through 9999, certificated in any category.

Note 1: This AD applies to each airplane identified in the preceding applicability provision, regardless of whether it has been modified, altered, or repaired in the area subject to the requirements of this AD. For airplanes that have been modified, altered, or repaired so that the performance of the requirements of this AD is affected, the owner/operator must request approval for an alternative method of compliance in accordance with paragraph (c) of this AD. The request should include an assessment of the effect of the modification, alteration, or repair on the unsafe condition addressed by this AD; and, if the unsafe condition has not been eliminated, the request should include specific proposed actions to address it.

Compliance: Required as indicated in the body of this AD, unless already accomplished.

To detect and correct cracks in the main landing gear (MLG) attachment bearing, which could result in collapse of the MLG during taxi and landing operations, accomplish the following:

Note 2: The compliance times of this AD are presented in landings instead of hours time-in-service (TIS). If the number of landings is unknown, hours TIS may be used by multiplying the number of hours TIS by 1.5.

(a) Upon the accumulation of 6,000 landings, upon the accumulation of 4,000 hours total TIS, or within the next 100 hours TIS after the effective date of this AD, whichever occurs later, inspect (with a dye penetrant method) the main landing gear (MLG) attachment bearing for cracks in accordance with the Accomplishment Instructions in SOCATA Service Bulletin (SB) No. SB 10–080 57, Amdt. 2, dated November 1995;

(1) If no cracks are found, continue to inspect the MLG attachment bearing for cracks at intervals not to exceed 1,500 landings or 1,000 hours TIS, whichever occurs later, until cracks are found, in accordance with the Accomplishment Instructions in the SOCATA SB No. SB 10–080 57, Amdt. 2, dated November 1995;

(2) If cracks are found in the MLG attachment bearing during any inspection required by this AD, prior to further flight, replace the MLG attachment bearing in accordance with the Accomplishment Instructions in the SOCATA SB No. SB 10–080 57, Amdt. 2, dated November 1995; and,

(3) Upon the accumulation of 6,000 landings or 4,000 hours TIS after the date of any MLG attachment bearing replacement, whichever occurs later, and thereafter at intervals not to exceed 1,500 landings or 1,000 hours TIS, inspect the MLG attachment bearing for cracks as specified in paragraph (a) of this AD.

(b) Special flight permits may be issued in accordance with sections 21.197 and 21.199 of the Federal Aviation Regulations (14 CFR 21.197 and 21.199) to operate the airplane to a location where the requirements of this AD can be accomplished.

(c) An alternative method of compliance or adjustment of the initial or repetitive compliance times that provides an equivalent level of safety may be approved by the Manager, Small Airplane Directorate, FAA, 1201 Walnut, suite 900, Kansas City, Missouri 64106. The request shall be forwarded through an appropriate FAA Maintenance Inspector, who may add comments and then send it to the Manager, Small Airplane Directorate.

Note 3: Information concerning the existence of approved alternative methods of compliance with this AD, if any, may be obtained from the Small Airplane Directorate.

(d) Questions or technical information related to Socata Service Bulletin No. SB 10–080 57, Amdt. 2, dated November 1995, should be directed the SOCATA—Groupe AEROSPATIALE, Socata Product Support, Aerodrome Tarbes-Ossun-Lourdes, B P 930—F65009 Tarbes Cedex, France; telephone: 33.5.62.41.76.52; facsimile: 33.5.62.41.76.54; or the Product Support Manager, SOCATA—Groupe AEROSPATIALE, North Perry Airport, 7501 Pembroke Road, Pembroke Pines, Florida 33023; telephone: (954) 893–1160; facsimile: (954) 964–4141. This service information may be examined at the FAA, Central Region, Office of the Regional Counsel, Room 1558, 601 E. 12th Street, Kansas City, Missouri 64106.

(e) The inspections and replacement required by this AD shall be done in accordance with Socata Service Bulletin No. SB 10–080 57, Amdt. 2, dated November 1995. This incorporation by reference was approved by the Director of the Federal Register in accordance with 5 U.S.C. 552(a) and 1 CFR part 51. Copies may be obtained from SOCATA—Groupe AEROSPATIALE, Tarbes-Ossun-Lourdes, B P 930, 65009 Tarbes Cedex, France, or the Product Support Manager, SOCATA—Groupe AEROSPATIALE, North Perry Airport, 7501 Pembroke Road, Pembroke Pines, Florida

33023. Copies may be inspected at the FAA, Central Region, Office of the Regional Counsel, Room 1558, 601 E. 12th Street, Kansas City, Missouri, or at the Office of the Federal Register, 800 North Capitol Street, NW, suite 700, Washington, DC.

Note 4: The subject of this AD is addressed in French AD 94–266(A)R2, dated December 6, 1995.

(f) This amendment becomes effective on October 24, 1998.

Issued in Kansas City, Missouri, on August 25, 1998.

James E. Jackson,

Acting Manager, Small Airplane Directorate, Aircraft Certification Service.

[FR Doc. 98–23394 Filed 9–2–98; 8:45 am]

BILLING CODE 4910–13–P

DEPARTMENT OF TRANSPORTATION

Federal Aviation Administration

14 CFR Part 39

[Docket No. 98–NM–230–AD; Amendment 39–10731; AD 98–18–15]

RIN 2120–AA64

Airworthiness Directives; Gulfstream Model G–V Series Airplanes

AGENCY: Federal Aviation Administration, DOT.

ACTION: Final rule; request for comments.

SUMMARY: This amendment adopts a new airworthiness directive (AD) that is applicable to certain Gulfstream Model G–V series airplanes. This action requires a one-time inspection to measure the clearance between a certain wiring harness and the crew oxygen bottle; corrective actions, if necessary; and eventual relocation of the crew oxygen bottle and rework of the lines and tubing associated with the crew and passenger oxygen bottles. This amendment is prompted by a report indicating that interference between the wiring harness and the crew oxygen bottle was found on a production airplane. The actions specified in this AD are intended to prevent chafing of the wiring harness against the crew oxygen bottle, which could result in electrical shorting and possible fire in the underfloor structure of the airplane.

DATES: Effective September 18, 1998.

The incorporation by reference of certain publications listed in the regulations is approved by the Director of the Federal Register as of September 18, 1998.

Comments for inclusion in the Rules Docket must be received on or before November 2, 1998.

ADDRESSES: Submit comments in triplicate to the Federal Aviation Administration (FAA), Transport Airplane Directorate, ANM–114, Attention: Rules Docket No. 98–NM–230–AD, 1601 Lind Avenue, SW., Renton, Washington 98055–4056.

The service information referenced in this AD may be obtained from Gulfstream Aerospace Corporation, P.O. Box 2206, M/S D–10, Savannah, Georgia 31402–9980. This information may be examined at the FAA, Transport Airplane Directorate, 1601 Lind Avenue, SW., Renton, Washington; or at the FAA, Small Airplane Directorate, Atlanta Aircraft Certification Office, One Crown Center, 1895 Phoenix Boulevard, suite 450, Atlanta, Georgia; or at the Office of the Federal Register, 800 North Capitol Street, NW., suite 700, Washington, DC.

FOR FURTHER INFORMATION CONTACT: Neil Berryman, Aerospace Engineer, Systems and Flight Test Branch, ACE–116A, FAA, Small Airplane Directorate, Atlanta Aircraft Certification Office, One Crown Center, 1895 Phoenix Boulevard, suite 450, Atlanta, Georgia 30349; telephone (770) 703–6066; fax (770) 703–6097.

SUPPLEMENTARY INFORMATION: The FAA has received a report indicating that interference between a certain wiring harness and the crew oxygen bottle was observed on several production Gulfstream Model G–V series airplanes. Wiring contained in the affected harness, which is located beneath floor board 4C, includes the fuel boost pump power, ground service bus battery power, and three-phase alternating current power for the right battery charger. Interference between the wiring harness and the crew oxygen bottle could result in chafing of the electrical wires and consequent electrical shorting. Due to the proximity of the wiring harness to the oxygen bottle, such electrical shorting, if not prevented, could result in a fire in the underfloor structure of the airplane.

Gulfstream has inspected approximately 10 to 12 in-house airplanes to measure clearance between the wiring harness and crew oxygen bottle. These inspections revealed that, on certain airplanes, the lack of clearance had been detected during production and protective Teflon sheeting had been installed to prevent chafing. In some cases, evidence of chafing of the Teflon sheeting was observed. However, no chafing of wiring has been detected. It is unknown how many airplanes already have such protective sheeting installed.

Explanation of Relevant Service Information

The FAA has reviewed and approved Gulfstream Aerospace G–V Alert Customer Bulletin No. 4A, dated July 8, 1998, as revised by Gulfstream Aerospace G–V Alert Customer Bulletin No. 4A, Amendment 1, dated August 10, 1998. That alert customer bulletin and amendment describe procedures for a one-time visual inspection to measure the clearance between the wiring harness located beneath floor board 4C and the crew oxygen bottle and bottle mounting structure, and corrective actions, if necessary. The corrective actions include inspections for chafing of the wiring; repair of any damaged wiring in accordance with instructions provided by Gulfstream Technical Services; and installation of temporary protective Teflon sheeting, if not already installed, to prevent contact between the wiring harness and oxygen bottle. The alert customer bulletin and amendment reference Gulfstream Aircraft Service Change (ASC) No. 059A, dated August 3, 1998, as an additional source of service information. That ASC describes, among other things, procedures for permanent relocation of the crew oxygen bottle and rework of the lines and tubing associated with the crew and passenger oxygen bottles. Accomplishment of the actions specified in the alert customer bulletin and amendment is intended to adequately address the identified unsafe condition.

Explanation of the Requirements of the Rule

Since an unsafe condition has been identified that is likely to exist or develop on other airplanes of the same type design, this AD is being issued to prevent chafing of a wiring harness against the crew oxygen bottle, which could result in electrical shorting and possible fire in the underfloor structure of the airplane. This AD requires accomplishment of the actions specified in the alert customer bulletin and amendment described previously, except as discussed below.

Differences Between This AD and the Alert Customer Bulletin and Amendment

Operators should note that, although the alert customer bulletin and amendment specify that the manufacturer may be contacted for disposition of repair conditions, this AD requires the repair of those conditions to be accomplished in accordance with a method approved by the FAA.

Determination of Rule's Effective Date

Since a situation exists that requires the immediate adoption of this regulation, it is found that notice and opportunity for prior public comment hereon are impracticable, and that good cause exists for making this amendment effective in less than 30 days.

Comments Invited

Although this action is in the form of a final rule that involves requirements affecting flight safety and, thus, was not preceded by notice and an opportunity for public comment, comments are invited on this rule. Interested persons are invited to comment on this rule by submitting such written data, views, or arguments as they may desire. Communications shall identify the Rules Docket number and be submitted in triplicate to the address specified under the caption **ADDRESSES.** All communications received on or before the closing date for comments will be considered, and this rule may be amended in light of the comments received. Factual information that supports the commenter's ideas and suggestions is extremely helpful in evaluating the effectiveness of the AD action and determining whether additional rulemaking action would be needed.

Comments are specifically invited on the overall regulatory, economic, environmental, and energy aspects of the rule that might suggest a need to modify the rule. All comments submitted will be available, both before and after the closing date for comments, in the Rules Docket for examination by interested persons. A report that summarizes each FAA-public contact concerned with the substance of this AD will be filed in the Rules Docket.

Commenters wishing the FAA to acknowledge receipt of their comments submitted in response to this rule must submit a self-addressed, stamped postcard on which the following statement is made: ''Comments to Docket Number 98–NM–230–AD.'' The postcard will be date stamped and returned to the commenter.

Regulatory Impact

The regulations adopted herein will not have substantial direct effects on the States, on the relationship between the national government and the States, or on the distribution of power and responsibilities among the various levels of government. Therefore, in accordance with Executive Order 12612, it is determined that this final rule does not have sufficient federalism implications to warrant the preparation of a Federalism Assessment.

The FAA has determined that this regulation is an emergency regulation that must be issued immediately to correct an unsafe condition in aircraft, and that it is not a ''significant regulatory action'' under Executive Order 12866. It has been determined further that this action involves an emergency regulation under DOT Regulatory Policies and Procedures (44 FR 11034, February 26, 1979). If it is determined that this emergency regulation otherwise would be significant under DOT Regulatory Policies and Procedures, a final regulatory evaluation will be prepared and placed in the Rules Docket. A copy of it, if filed, may be obtained from the Rules Docket at the location provided under the caption **ADDRESSES.**

List of Subjects in 14 CFR Part 39

Air transportation, Aircraft, Aviation safety, Incorporation by reference, Safety.

Adoption of the Amendment

Accordingly, pursuant to the authority delegated to me by the Administrator, the Federal Aviation Administration amends part 39 of the Federal Aviation Regulations (14 CFR part 39) as follows:

PART 39—AIRWORTHINESS DIRECTIVES

1. The authority citation for part 39 continues to read as follows:

Authority: 49 U.S.C. 106(g), 40113, 44701.

§ 39.13 [Amended]

2. Section 39.13 is amended by adding the following new airworthiness directive:

98–18–15 Gulfstream Aerospace Corporation: Amendment 39–10731. Docket 98–NM–230–AD.

Applicability: Model G–V series airplanes, serial numbers 501 through 549 inclusive, certificated in any category.

Note 1: This AD applies to each airplane identified in the preceding applicability provision, regardless of whether it has been modified, altered, or repaired in the area subject to the requirements of this AD. For airplanes that have been modified, altered, or repaired so that the performance of the requirements of this AD is affected, the owner/operator must request approval for an alternative method of compliance in accordance with paragraph (c) of this AD. The request should include an assessment of the effect of the modification, alteration, or repair on the unsafe condition addressed by this AD; and, if the unsafe condition has not been eliminated, the request should include specific proposed actions to address it.

Compliance: Required as indicated, unless accomplished previously.

To prevent chafing of a wiring harness against the crew oxygen bottle, which could result in electrical shorting and possible fire in the underfloor structure of the airplane, accomplish the following:

(a) Within 25 flight hours after the effective date of this AD, perform a one-time visual inspection to measure the clearance between the wiring harness located beneath floor board 4C and the crew oxygen bottle and bottle mounting structure, in accordance with Gulfstream Aerospace G–V Alert Customer Bulletin No. 4A, dated July 8, 1998, as revised by Gulfstream Aerospace G–V Alert Customer Bulletin No. 4A, Amendment 1, dated August 10, 1998.

(1) If the clearance is greater than or equal to .250 inch, and if any Teflon sheeting is installed: No further action is required by paragraph (a) of this AD.

(2) If the clearance is greater than or equal to .250 inch, and if no Teflon sheeting is installed: Prior to further flight, install .030-inch Teflon sheeting in accordance with the alert customer bulletin, as revised by Amendment 1.

(3) If the clearance is less than .250 inch, and if any Teflon sheeting is installed: Prior to further flight, inspect the sheeting for evidence of chafing, in accordance with the alert customer bulletin, as revised by Amendment 1.

(i) If no evidence of chafing of the Teflon sheeting is detected, prior to further flight, install .125-inch Teflon sheeting, in accordance with the alert customer bulletin, as revised by Amendment 1.

(ii) If any evidence of chafing of the Teflon sheeting is detected, prior to further flight, remove the Teflon sheeting and inspect the wires to detect evidence of chafing, in accordance with the alert customer bulletin, as revised by Amendment 1; and accomplish the actions specified in either paragraph (a)(4)(i) or (a)(4)(ii), as applicable.

(4) If the clearance is less than .250 inch, and if no Teflon sheeting is installed: Prior to further flight, inspect the wires to detect evidence of chafing, in accordance with the alert customer bulletin, as revised by Amendment 1.

(i) If no evidence of chafing of the wires is detected, prior to further flight, install .125-inch Teflon sheeting in accordance with the alert customer bulletin, as revised by Amendment 1.

(ii) If any evidence of chafing of the wires is detected, prior to further flight, repair in accordance with a method approved by the Manager, Atlanta Aircraft Certification Office (ACO), FAA, Small Airplane Directorate.

(b) Within 150 flight hours after the effective date of this AD, relocate the crew oxygen bottle and rework the lines and tubing associated with the crew and passenger oxygen bottles, in accordance with Gulfstream Aerospace G–V Alert Customer Bulletin No. 4A, dated July 8, 1998, as revised by Gulfstream Aerospace G–V Alert Customer Bulletin No. 4A, Amendment 1, dated August 10, 1998.

Note 2: Gulfstream Aerospace G–V Alert Customer Bulletin No. 4A, dated July 8, 1998, as revised by Gulfstream Aerospace G–V Alert Customer Bulletin No. 4A, Amendment 1, dated August 10, 1998, refers to Gulfstream

Aerospace Aircraft Service Change No. 059A, dated August 3, 1998, as an additional source of service information for accomplishing the relocation of the crew oxygen bottle.

(c) An alternative method of compliance or adjustment of the compliance time that provides an acceptable level of safety may be used if approved by the Manager, Atlanta ACO. Operators shall submit their requests through an appropriate FAA Principal Maintenance Inspector, who may add comments and then send it to the Manager, Atlanta ACO.

Note 3: Information concerning the existence of approved alternative methods of compliance with this AD, if any, may be obtained from the Atlanta ACO.

(d) Special flight permits may be issued in accordance with sections 21.197 and 21.199 of the Federal Aviation Regulations (14 CFR 21.197 and 21.199) to operate the airplane to a location where the requirements of this AD can be accomplished.

(e) Except as provided by (a)(4)(ii) of this AD, the actions shall be done in accordance with Gulfstream Aerospace G–V Alert Customer Bulletin No. 4A, dated July 8, 1998, as revised by Gulfstream Aerospace G–V Alert Customer Bulletin No. 4A, Amendment 1, dated August 10, 1998. This incorporation by reference was approved by the Director of the Federal Register in accordance with 5 U.S.C. 552(a) and 1 CFR part 51. Copies may be obtained from Gulfstream Aerospace Corporation, P.O. Box 2206, M/S D–10, Savannah, Georgia 31402–9980. Copies may be inspected at the FAA, Transport Airplane Directorate, 1601 Lind Avenue, SW., Renton, Washington; or at the FAA, Small Airplane Directorate, Atlanta Aircraft Certification Office, One Crown Center, 1895 Phoenix Boulevard, suite 450, Atlanta, Georgia; or at the Office of the Federal Register, 800 North Capitol Street, NW., suite 700, Washington, DC.

(f) This amendment becomes effective on September 18, 1998.

Issued in Renton, Washington, on August 26, 1998.

Vi L. Lipski,

Acting Manager, Transport Airplane Directorate, Aircraft Certification Service.

[FR Doc. 98–23601 Filed 9–2–98; 8:45 am]

BILLING CODE 4910–13–U

DEPARTMENT OF TRANSPORTATION

Federal Aviation Administration

14 CFR Part 39

[Docket No. 98–NM–255–AD; Amendment 39–10735; AD 98–18–19]

RIN 2120–AA64

Airworthiness Directives; McDonnell Douglas Model MD–90–30 Series Airplanes

AGENCY: Federal Aviation Administration, DOT.

ACTION: Final rule; request for comments.

SUMMARY: This amendment adopts a new airworthiness directive (AD) that is applicable to certain McDonnell Douglas Model MD–90–30 series airplanes. This action requires a one-time inspection of the actuator attach bolts of the elevator load feel (ELF) located under the forward cockpit floor, and corrective actions, if necessary. This amendment is prompted by a report indicating that, during manufacture of an airplane, an actuator attach bolt of the ELF was installed improperly. The actions specified in this AD are intended to ensure that the actuator attach bolts are installed properly. Improper installation of such bolts could result in disconnection of the ELF mechanism, and consequent loss of pitch control of the airplane.

DATES: Effective September 18, 1998.

The incorporation by reference of certain publications listed in the regulations is approved by the Director of the Federal Register as of September 18, 1998.

Comments for inclusion in the Rules Docket must be received on or before November 2, 1998.

ADDRESSES: Submit comments in triplicate to the Federal Aviation Administration (FAA), Transport Airplane Directorate, ANM–114, Attention: Rules Docket No. 98–NM–255–AD, 1601 Lind Avenue, SW., Renton, Washington 98055–4056.

The service information referenced in this AD may be obtained from The Boeing Company, Douglas Products Division, 3855 Lakewood Boulevard, Long Beach, California 90846, Attention: Technical Publications Business Administration, Dept. C1–L51 (2–60). This information may be examined at the FAA, Transport Airplane Directorate, 1601 Lind Avenue, SW., Renton, Washington; or at the FAA, Transport Airplane Directorate, Los Angeles Aircraft Certification Office, 3960 Paramount Boulevard, Lakewood, California; or at the Office of the Federal Register, 800 North Capitol Street, NW., suite 700, Washington, DC.

FOR FURTHER INFORMATION CONTACT: Brent Bandley, Aerospace Engineer, Airframe Branch, ANM–120L, FAA, Transport Airplane Directorate, Los Angeles Aircraft Certification Office, 3960 Paramount Boulevard, Lakewood, California 90712–4137; telephone (562) 627–5237; fax (562) 627–5210.

SUPPLEMENTARY INFORMATION: The FAA has received a report indicating that, during a quality assurance inspection of the elevator load feel (ELF) mechanism, an actuator attaching bolt was found installed improperly on a McDonnell Douglas Model MD–90–30 series airplane. This bolt was installed improperly during manufacture of the airplane. This condition, if not corrected, could result in disconnection of the ELF mechanism, and consequent loss of pitch control of the airplane.

Explanation of Relevant Service Information

The FAA has reviewed and approved McDonnell Douglas Alert Service Bulletin MD90–27A032, dated June 22, 1998. The alert service bulletin describes procedures for performing a one-time visual inspection of the left and right actuator attach bolts of the ELF located under the forward cockpit floor; and tightening the attachments or installing new ELF attachments, if necessary.

Explanation of the Requirements of the Rule

Since an unsafe condition has been identified that is likely to exist or develop on other airplanes of the same type design, this AD is being issued to ensure that the actuator attach bolts of the ELF are installed properly. Improper installation of the attach bolts could result in disconnection of the ELF mechanism, and consequent loss of pitch control of the airplane. The actions are required to be accomplished in accordance with the alert service bulletin described previously. The AD also requires that operators report results of inspection findings to the FAA.

Determination of Rule's Effective Date

Since a situation exists that requires the immediate adoption of this regulation, it is found that notice and opportunity for prior public comment hereon are impracticable, and that good cause exists for making this amendment effective in less than 30 days.

Comments Invited

Although this action is in the form of a final rule that involves requirements affecting flight safety and, thus, was not preceded by notice and an opportunity for public comment, comments are invited on this rule. Interested persons are invited to comment on this rule by submitting such written data, views, or arguments as they may desire. Communications shall identify the Rules Docket number and be submitted in triplicate to the address specified under the caption **ADDRESSES**. All communications received on or before the closing date for comments will be considered, and this rule may be amended in light of the comments received. Factual information that

supports the commenter's ideas and suggestions is extremely helpful in evaluating the effectiveness of the AD action and determining whether additional rulemaking action would be needed.

Comments are specifically invited on the overall regulatory, economic, environmental, and energy aspects of the rule that might suggest a need to modify the rule. All comments submitted will be available, both before and after the closing date for comments, in the Rules Docket for examination by interested persons. A report that summarizes each FAA-public contact concerned with the substance of this AD will be filed in the Rules Docket.

Commenters wishing the FAA to acknowledge receipt of their comments submitted in response to this rule must submit a self-addressed, stamped postcard on which the following statement is made: ''Comments to Docket Number 98–NM–255–AD.'' The postcard will be date stamped and returned to the commenter.

Regulatory Impact

The regulations adopted herein will not have substantial direct effects on the States, on the relationship between the national government and the States, or on the distribution of power and responsibilities among the various levels of government. Therefore, in accordance with Executive Order 12612, it is determined that this final rule does not have sufficient federalism implications to warrant the preparation of a Federalism Assessment.

The FAA has determined that this regulation is an emergency regulation that must be issued immediately to correct an unsafe condition in aircraft, and that it is not a ''significant regulatory action'' under Executive Order 12866. It has been determined further that this action involves an emergency regulation under DOT Regulatory Policies and Procedures (44 FR 11034, February 26, 1979). If it is determined that this emergency regulation otherwise would be significant under DOT Regulatory Policies and Procedures, a final regulatory evaluation will be prepared and placed in the Rules Docket. A copy of it, if filed, may be obtained from the Rules Docket at the location provided under the caption **ADDRESSES**.

List of Subjects in 14 CFR Part 39

Air transportation, Aircraft, Aviation safety, Incorporation by reference, Safety.

Adoption of the Amendment

Accordingly, pursuant to the authority delegated to me by the Administrator, the Federal Aviation Administration amends part 39 of the Federal Aviation Regulations (14 CFR part 39) as follows:

PART 39—AIRWORTHINESS DIRECTIVES

1. The authority citation for part 39 continues to read as follows:

Authority: 49 U.S.C. 106(g), 40113, 44701.

§ 39.13 [Amended]

2. Section 39.13 is amended by adding the following new airworthiness directive:

98–18–19 McDonnell Douglas: Amendment 39–10735. Docket 98–NM–255–AD.

Applicability: Model MD–90–30 series airplanes, as listed in McDonnell Douglas MD–90 Alert Service Bulletin MD90–27A032, dated June 22, 1998; certificated in any category.

Note 1: This AD applies to each airplane identified in the preceding applicability provision, regardless of whether it has been modified, altered, or repaired in the area subject to the requirements of this AD. For airplanes that have been modified, altered, or repaired so that the performance of the requirements of this AD is affected, the owner/operator must request approval for an alternative method of compliance in accordance with paragraph (c) of this AD. The request should include an assessment of the effect of the modification, alteration, or repair on the unsafe condition addressed by this AD; and, if the unsafe condition has not been eliminated, the request should include specific proposed actions to address it.

Compliance: Required as indicated, unless accomplished previously.

To ensure that the actuator attach bolts of the elevator load feel (ELF) are installed properly, accomplish the following:

(a) Within 30 days after the effective date of this AD, perform a visual inspection to determine if the left and right actuator attach bolts of the ELF located under the cockpit floor are installed properly, in accordance with McDonnell Douglas Alert Service Bulletin MD90–27A032, dated June 22, 1998.

(1) If the ELF attachments are installed properly, no further action is required by this AD.

(2) If the ELF attachments are not installed properly, prior to further flight, tighten the attachments or install new ELF attachments, in accordance with the alert service bulletin. Tightening of attachments or installing new attachments constitutes terminating action for this AD.

(b) Within 10 days after accomplishing the inspection required by paragraph (a) of this AD, submit a report of the inspection results (both positive and negative) to the Manager, Los Angeles Aircraft Certification Office, FAA, Transport Airplane Directorate, 3960 Paramount Boulevard, Lakewood, California 90712; or fax to (562) 627–5210. Information collection requirements contained in this regulation have been approved by the Office of Management and Budget (OMB) under the provisions of the Paperwork Reduction Act of 1980 (44 U.S.C. 3501 *et seq.*) and have been assigned OMB Control Number 2120–0056.

(c) An alternative method of compliance or adjustment of the compliance time that provides an acceptable level of safety may be used if approved by the Manager, Los Angeles Aircraft Certification Office (ACO), FAA, Transport Airplane Directorate. Operators shall submit their requests through an appropriate FAA Principal Maintenance Inspector, who may add comments and then send it to the Manager, Los Angeles ACO.

Note 2: Information concerning the existence of approved alternative methods of compliance with this AD, if any, may be obtained from the Los Angeles ACO.

(d) Special flight permits may be issued in accordance with sections 21.197 and 21.199 of the Federal Aviation Regulations (14 CFR 21.197 and 21.199) to operate the airplane to a location where the requirements of this AD can be accomplished.

(e) Except as provided by paragraph (b) of this AD, the actions shall be done in accordance with McDonnell Douglas Alert Service Bulletin MD90–27A032, dated June 22, 1998. This incorporation by reference was approved by the Director of the Federal Register in accordance with 5 U.S.C. 552(a) and 1 CFR part 51. Copies may be obtained from The Boeing Company, Douglas Products Division, 3855 Lakewood Boulevard, Long Beach, California 90846, Attention: Technical Publications Business Administration, Dept. C1–L51 (2–60). Copies may be inspected at the FAA, Transport Airplane Directorate, 1601 Lind Avenue, SW., Renton, Washington; or at the FAA, Transport Airplane Directorate, Los Angeles Aircraft Certification Office, 3960 Paramount Boulevard, Lakewood, California; or at the Office of the Federal Register, 800 North Capitol Street, NW., suite 700, Washington, DC.

(f) This amendment becomes effective on September 18, 1998.

Issued in Renton, Washington, on August 27, 1998.

Vi L. Lipski,

Acting Manager, Transport Airplane Directorate, Aircraft Certification Service.

[FR Doc. 98–23621 Filed 9–2–98; 8:45 am]

BILLING CODE 4910–13–U

DEPARTMENT OF TRANSPORTATION

Federal Aviation Administration

14 CFR Part 39

[Docket No. 98–NM–167–AD; Amendment 39–10734; AD 98–18–18]

RIN 2120–AA64

Airworthiness Directives; British Aerospace (Jetstream) Model 4101 Airplanes

AGENCY: Federal Aviation Administration, DOT.

ACTION: Final rule.

SUMMARY: This amendment adopts a new airworthiness directive (AD), applicable to certain British Aerospace (Jetstream) Model 4101 airplanes, that requires modification of the attach points of the uplock system of the nose landing gear (NLG). This amendment is prompted by issuance of mandatory continuing airworthiness information by a foreign civil airworthiness authority. The actions specified by this AD are intended to prevent wear of the attach points of the uplock system of the NLG; such wear could result in damage to the adjacent emergency hydraulic system, or jamming of the uplock system and consequent inability to extend and retract the NLG.

DATES: Effective October 8, 1998.

The incorporation by reference of certain publications listed in the regulations is approved by the Director of the Federal Register as of October 8, 1998.

ADDRESSES: The service information referenced in this AD may be obtained from AI(R) American Support, Inc., 13850 Mclearen Road, Herndon, Virginia 20171. This information may be examined at the Federal Aviation Administration (FAA), Transport Airplane Directorate, Rules Docket, 1601 Lind Avenue, SW., Renton, Washington; or at the Office of the Federal Register, 800 North Capitol Street, NW., suite 700, Washington, DC.

FOR FURTHER INFORMATION CONTACT: Norman B. Martenson, Manager, International Branch, ANM–116, FAA, Transport Airplane Directorate, 1601 Lind Avenue, SW., Renton, Washington 98055–4056; telephone (425) 227–2110; fax (425) 227–1149.

SUPPLEMENTARY INFORMATION: A proposal to amend part 39 of the Federal Aviation Regulations (14 CFR part 39) to include an airworthiness directive (AD) that is applicable to certain British Aerospace (Jetstream) Model 4101 airplanes was published in the **Federal Register** on July 7, 1998 (63 FR 36630). That action proposed to require modification of the attach points of the uplock system of the nose landing gear (NLG).

Comments

Interested persons have been afforded an opportunity to participate in the making of this amendment. No comments were submitted in response to the proposal or the FAA's determination of the cost to the public.

Conclusion

The FAA has determined that air safety and the public interest require the adoption of the rule as proposed.

Cost Impact

The FAA estimates that 58 airplanes of U.S. registry will be affected by this AD, that it will take approximately 10 work hours per airplane to accomplish the required modification, and that the average labor rate is $60 per work hour. Required parts will cost approximately $170 per airplane. Based on these figures, the cost impact of the AD on U.S. operators is estimated to be $44,660, or $770 per airplane.

The cost impact figure discussed above is based on assumptions that no operator has yet accomplished any of the requirements of this AD action, and that no operator would accomplish those actions in the future if this AD were not adopted.

Regulatory Impact

The regulations adopted herein will not have substantial direct effects on the States, on the relationship between the national government and the States, or on the distribution of power and responsibilities among the various levels of government. Therefore, in accordance with Executive Order 12612, it is determined that this final rule does not have sufficient federalism implications to warrant the preparation of a Federalism Assessment.

For the reasons discussed above, I certify that this action (1) is not a ''significant regulatory action'' under Executive Order 12866; (2) is not a ''significant rule'' under DOT Regulatory Policies and Procedures (44 FR 11034, February 26, 1979); and (3) will not have a significant economic impact, positive or negative, on a substantial number of small entities under the criteria of the Regulatory Flexibility Act. A final evaluation has been prepared for this action and it is contained in the Rules Docket. A copy of it may be obtained from the Rules Docket at the location provided under the caption **ADDRESSES**.

List of Subjects in 14 CFR Part 39

Air transportation, Aircraft, Aviation safety, Incorporation by reference, Safety.

Adoption of the Amendment

Accordingly, pursuant to the authority delegated to me by the Administrator, the Federal Aviation Administration amends part 39 of the Federal Aviation Regulations (14 CFR part 39) as follows:

PART 39—AIRWORTHINESS DIRECTIVES

1. The authority citation for part 39 continues to read as follows:

Authority: 49 U.S.C. 106(g), 40113, 44701.

§ 39.13 [Amended]

2. Section 39.13 is amended by adding the following new airworthiness directive:

98–18–18 British Aerospace Regional Aircraft [Formerly Jetstream Aircraft Limited; British Aerospace (Commercial Aircraft) Limited]; Amendment 39–10734. Docket 98–NM–167–AD.

Applicability: Jetstream Model 4101 airplanes, constructor's numbers 41004 through 41100 inclusive; certificated in any category.

Note 1: This AD applies to each airplane identified in the preceding applicability provision, regardless of whether it has been modified, altered, or repaired in the area subject to the requirements of this AD. For airplanes that have been modified, altered, or repaired so that the performance of the requirements of this AD is affected, the owner/operator must request approval for an alternative method of compliance in accordance with paragraph (b) of this AD. The request should include an assessment of the effect of the modification, alteration, or repair on the unsafe condition addressed by this AD; and, if the unsafe condition has not been eliminated, the request should include specific proposed actions to address it.

Compliance: Required as indicated, unless accomplished previously.

To prevent wear of the attach points of the uplock system of the nose landing gear (NLG), which could result in damage to the adjacent emergency hydraulic system, or jamming of the uplock system, and consequent inability to extend and retract the NLG, accomplish the following:

(a) Prior to the accumulation of 9,000 total landings, or within 1,000 landings after the effective date of this AD, whichever occurs later, modify the attach points of the uplock system of the NLG, in accordance with Jetstream Alert Service Bulletin J41–53–041, dated July 25, 1997.

(b) An alternative method of compliance or adjustment of the compliance time that provides an acceptable level of safety may be used if approved by the Manager, International Branch, ANM–116, FAA, Transport Airplane Directorate. Operators shall submit their requests through an appropriate FAA Principal Maintenance Inspector, who may add comments and then send it to the Manager, International Branch, ANM–116.

Note 2: Information concerning the existence of approved alternative methods of compliance with this AD, if any, may be obtained from the International Branch, ANM–116.

(c) Special flight permits may be issued in accordance with sections 21.197 and 21.199 of the Federal Aviation Regulations (14 CFR 21.197 and 21.199) to operate the airplane to

a location where the requirements of this AD can be accomplished.

(d) The modification shall be done in accordance with Jetstream Alert Service Bulletin J41–53–041, dated July 25, 1997. This incorporation by reference was approved by the Director of the Federal Register in accordance with 5 U.S.C. 552(a) and 1 CFR part 51. Copies may be obtained from AI(R) American Support, Inc., 13850 Mclearen Road, Herndon, Virginia 20171. Copies may be inspected at the FAA, Transport Airplane Directorate, 1601 Lind Avenue, SW., Renton, Washington; or at the Office of the Federal Register, 800 North Capitol Street, NW., suite 700, Washington, DC.

Note 3: The subject of this AD is addressed in British airworthiness directive 009–07–97.

(e) This amendment becomes effective on October 8, 1998.

Issued in Renton, Washington, on August 26, 1998.

Vi L. Lipski,

Acting Manager, Transport Airplane Directorate, Aircraft Certification Service.

[FR Doc. 98–23602 Filed 9–2–98; 8:45 am]

BILLING CODE 4910–13–P

DEPARTMENT OF TRANSPORTATION

Federal Aviation Administration

14 CFR Part 39

[Docket No. 98–NM–10–AD; Amendment 39–10733; AD 98–18–17]

RIN 2120–AA64

Airworthiness Directives; McDonnell Douglas Model DC–9–80 Series Airplanes and Model MD–90–30 and MD–88 Airplanes

AGENCY: Federal Aviation Administration, DOT.

ACTION: Final rule.

SUMMARY: This amendment adopts a new airworthiness directive (AD), applicable to all McDonnell Douglas Model DC–9–80 series airplanes and Model MD–90–30 and MD–88 airplanes, that requires a one-time inspection of the harness assembly of the tailcone emergency evacuation slide to determine the diameter of the swaged balls; reidentification of the harness assembly; and reinstallation or replacement of the assembly with a new assembly, if necessary. This amendment is prompted by a failed deployment of the tailcone emergency evacuation slide during a system test conducted by the manufacturer. The actions specified by this AD are intended to prevent failure of the tailcone emergency evacuation slide to deploy automatically due to incorrect diameter of the swaged balls on the wire rope of the harness assembly.

DATES: Effective October 8, 1998.

The incorporation by reference of certain publications listed in the regulations is approved by the Director of the Federal Register as of October 8, 1998.

ADDRESSES: The service information referenced in this AD may be obtained from The Boeing Company, Douglas Products Division, 3855 Lakewood Boulevard, Long Beach, California 90846, Attention: Technical Publications Business Administration, Dept. C1–L51 (2–60). This information may be examined at the Federal Aviation Administration (FAA), Transport Airplane Directorate, Rules Docket, 1601 Lind Avenue, SW., Renton, Washington; or at the FAA, Transport Airplane Directorate, Los Angeles Aircraft Certification Office, 3960 Paramount Boulevard, Lakewood, California; or at the Office of the Federal Register, 800 North Capitol Street, NW., suite 700, Washington, DC.

FOR FURTHER INFORMATION CONTACT: Alan Sinclair, Aerospace Engineer, Systems and Equipment Branch, ANM–130L, FAA, Transport Airplane Directorate, Los Angeles Aircraft Certification Office, 3960 Paramount Boulevard, Lakewood, California 90712–4137; telephone (562) 627–5338; fax (562) 627–5210.

SUPPLEMENTARY INFORMATION: A proposal to amend part 39 of the Federal Aviation Regulations (14 CFR part 39) to include an airworthiness directive (AD) that is applicable to all McDonnell Douglas Model DC–9–80 series airplanes and Model MD–90–30 and MD–88 airplanes was published in the **Federal Register** on May 5, 1998 (63 FR 24762). That action proposed to require a one-time inspection of the harness assembly of the tailcone emergency evacuation slide to determine the diameter of the swaged balls; reidentification of the harness assembly; and reinstallation or replacement of the assembly with a new assembly, if necessary.

Comments

Interested persons have been afforded an opportunity to participate in the making of this amendment. Due consideration has been given to the single comment received.

The commenter supports the proposed rule.

Conclusion

After careful review of the available data, including the comment noted above, the FAA has determined that air safety and the public interest require the adoption of the rule as proposed.

Cost Impact

There are approximately 943 airplanes of the affected design in the worldwide fleet. The FAA estimates that 570 airplanes of U.S. registry will be affected by this AD, that it will take approximately 2 work hours per airplane to accomplish the required actions, and that the average labor rate is $60 per work hour. Based on these figures, the cost impact of the AD on U.S. operators is estimated to be $68,400, or $120 per airplane.

The cost impact figure discussed above is based on assumptions that no operator has yet accomplished any of the requirements of this AD action, and that no operator would accomplish those actions in the future if this AD were not adopted.

Regulatory Impact

The regulations adopted herein will not have substantial direct effects on the States, on the relationship between the national government and the States, or on the distribution of power and responsibilities among the various levels of government. Therefore, in accordance with Executive Order 12612, it is determined that this final rule does not have sufficient federalism implications to warrant the preparation of a Federalism Assessment.

For the reasons discussed above, I certify that this action (1) is not a ''significant regulatory action'' under Executive Order 12866; (2) is not a ''significant rule'' under DOT Regulatory Policies and Procedures (44 FR 11034, February 26, 1979); and (3) will not have a significant economic impact, positive or negative, on a substantial number of small entities under the criteria of the Regulatory Flexibility Act. A final evaluation has been prepared for this action and it is contained in the Rules Docket. A copy of it may be obtained from the Rules Docket at the location provided under the caption **ADDRESSES.**

List of Subjects in 14 CFR Part 39

Air transportation, Aircraft, Aviation safety, Incorporation by reference, Safety.

Adoption of the Amendment

Accordingly, pursuant to the authority delegated to me by the Administrator, the Federal Aviation Administration amends part 39 of the Federal Aviation Regulations (14 CFR part 39) as follows:

PART 39—AIRWORTHINESS DIRECTIVES

1. The authority citation for part 39 continues to read as follows:

Authority: 49 U.S.C. 106(g), 40113, 44701.

§ 39.13 [Amended]

2. Section 39.13 is amended by adding the following new airworthiness directive:

98–18–17 McDonnell Douglas: Amendment 39–10733. Docket 98–NM–10–AD.

Applicability: All Model DC–9–81 (MD–81), DC–9–82 (MD–82), DC–9–83 (MD–83), and DC–9–87 (MD–87) series airplanes; and Model MD–88 and MD–90–30 airplanes; certificated in any category.

Note 1: This AD applies to each airplane identified in the preceding applicability provision, regardless of whether it has been modified, altered, or repaired in the area subject to the requirements of this AD. For airplanes that have been modified, altered, or repaired so that the performance of the requirements of this AD is affected, the owner/operator must request approval for an alternative method of compliance in accordance with paragraph (c) of this AD. The request should include an assessment of the effect of the modification, alteration, or repair on the unsafe condition addressed by this AD; and, if the unsafe condition has not been eliminated, the request should include specific proposed actions to address it.

Compliance: Required as indicated, unless accomplished previously.

To prevent failure of the tailcone emergency evacuation slide to deploy automatically due to incorrect diameter of the swaged balls on the wire rope of the harness assembly, accomplish the following:

(a) Within 180 days after the effective date of this AD, perform a one-time inspection of the harness assembly of the tailcone emergency evacuation slide to determine the diameter of the swaged balls; in accordance with McDonnell Douglas Alert Service Bulletin MD80–25A364 [for Model DC–9–81 (MD–81), DC–9–82 (MD–82), DC–9–83 (MD–83), and DC–9–87 (MD–87) series airplanes, and Model MD–88 airplanes]; or MD90–25A030 (for Model MD–90–30 airplanes); both dated October 30, 1997.

(1) If the swaged balls are within the limits specified in the applicable alert service bulletin, prior to further flight, reidentify and reinstall the harness assembly in accordance with the applicable alert service bulletin.

(2) If the swaged balls are outside the limits specified in the applicable alert service bulletin, prior to further flight, replace the harness assembly having part number (P/N) 8370024–3 with a new harness assembly having P/N 8370024–9 or 8370024–3H, as applicable, in accordance with the applicable alert service bulletin.

(b) As of the effective date of this AD, no person shall install a harness assembly, (P/N) 8370024–3, on any airplane.

(c) An alternative method of compliance or adjustment of the compliance time that provides an acceptable level of safety may be used if approved by the Manager, Los Angeles Aircraft Certification Office (ACO), FAA, Transport Airplane Directorate. Operators shall submit their requests through an appropriate FAA Principal Maintenance Inspector, who may add comments and then send it to the Manager, Los Angeles ACO.

Note 2: Information concerning the existence of approved alternative methods of compliance with this AD, if any, may be obtained from the Los Angeles ACO.

(d) Special flight permits may be issued in accordance with §§ 21.197 and 21.199 of the Federal Aviation Regulations (14 CFR 21.197 and 21.199) to operate the airplane to a location where the requirements of this AD can be accomplished.

(e) The actions shall be done in accordance with McDonnell Douglas Alert Service Bulletin MD80–25A364, dated October 30, 1997, or McDonnell Douglas Alert Service Bulletin MD90–25A030, dated October 30, 1997, as applicable. This incorporation by reference was approved by the Director of the Federal Register in accordance with 5 U.S.C. 552(a) and 1 CFR part 51. Copies may be obtained from The Boeing Company, Douglas Products Division, 3855 Lakewood Boulevard, Long Beach, California 90846, Attention: Technical Publications Business Administration, Dept. C1–L51 (2–60). Copies may be inspected at the FAA, Transport Airplane Directorate, 1601 Lind Avenue, SW., Renton, Washington; or at the FAA, Transport Airplane Directorate, Los Angeles Aircraft Certification Office, 3960 Paramount Boulevard, Lakewood, California; or at the Office of the Federal Register, 800 North Capitol Street, NW., suite 700, Washington, DC.

(f) This amendment becomes effective on October 8, 1998.

Issued in Renton, Washington, on August 26, 1998.

Vi L. Lipski,

Acting Manager, Transport Airplane Directorate, Aircraft Certification Service.

[FR Doc. 98–23603 Filed 9–2–98; 8:45 am]

BILLING CODE 4910–13–U

DEPARTMENT OF TRANSPORTATION

Federal Aviation Administration

14 CFR Part 39

[Docket No. 98–NM–01–AD; Amendment 39–10732; AD 98–18–16]

RIN 2120–AA64

Airworthiness Directives; Airbus Model A320 Series Airplanes

AGENCY: Federal Aviation Administration, DOT.

ACTION: Final rule.

SUMMARY: This amendment supersedes an existing airworthiness directive (AD), applicable to certain Airbus Model A320–111, –211, –212, and –231 series airplanes, that currently requires reinforcement of the tail section of the fuselage at frames 68 and 69. This amendment adds a requirement for reinforcement of the tail section of the fuselage at frames 65 to 67. This action also revises the applicability of the existing AD. This amendment is prompted by reports indicating that the tail section has struck the runway during takeoffs and landings. The actions specified by this AD are intended to prevent structural damage to the tail section when it strikes the runway, which could result in depressurization of the fuselage during flight.

DATES: Effective October 8, 1998.

The incorporation by reference of Airbus Service Bulletin A320–53–1110, Revision 1, dated November 27, 1995, and Airbus Service Bulletin A320–53–1131, dated July 24, 1997, as listed in the regulations, is approved by the Director of the Federal Register as of October 8, 1998.

The incorporation by reference of Airbus Service Bulletin A320–53–1110, dated August 28, 1995, was approved previously by the Director of the Federal Register as of May 15, 1997 (62 FR 17532, April 10, 1997).

ADDRESSES: The service information referenced in this AD may be obtained from Airbus Industrie, 1 Rond Point Maurice Bellonte, 31707 Blagnac Cedex, France. This information may be examined at the Federal Aviation Administration (FAA), Transport Airplane Directorate, Rules Docket, 1601 Lind Avenue, SW., Renton, Washington; or at the Office of the Federal Register, 800 North Capitol Street, NW., suite 700, Washington, DC.

FOR FURTHER INFORMATION CONTACT: Norman B. Martenson, Manager, International Branch, ANM–116, FAA, Transport Airplane Directorate, 1601 Lind Avenue, SW., Renton, Washington 98055–4056; telephone (425) 227–2110; fax (425) 227–1149.

SUPPLEMENTARY INFORMATION: A proposal to amend part 39 of the Federal Aviation Regulations (14 CFR part 39) by superseding AD 97–08–04, amendment 39–9992 (62 FR 17532, April 10, 1997), which is applicable to certain Airbus Model A320–111, –211, –212, and –231 series airplanes, was published in the **Federal Register** on July 9, 1998 (63 FR 37078). The action proposed to supersede AD 97–08–04 to continue to require reinforcement of the tail section of the fuselage at frames 68 and 69. It also proposed to add a requirement for reinforcement of the tail section of the fuselage at frames 65 to 67. The action also proposed to revise the applicability of the existing AD.

Comments

Interested persons have been afforded an opportunity to participate in the making of this amendment. Due consideration has been given to the single comment received.

The commenter supports the proposed rule.

Conclusion

After careful review of the available data, including the comment noted above, the FAA has determined that air safety and the public interest require the adoption of the rule as proposed.

Cost Impact

There are approximately 118 airplanes of U.S. registry that will be affected by this AD.

The actions that are currently required by AD 97–08–04, and retained in this AD, take approximately 196 work hours per airplane to accomplish, at an average labor rate of $60 per work hour. Required parts will be provided by the manufacturer at no cost to the operators. Based on these figures, the cost impact of the currently required actions on U.S. operators is estimated to be $1,387,680, or $11,760 per airplane.

The new actions that are required by this new AD will take approximately 488 work hours per airplane to accomplish, at an average labor rate of $60 per work hour. Required parts will be provided by the manufacturer at no cost to the operators. Based on these figures, the cost impact of the new requirements of this AD on U.S. operators is estimated to be $3,455,040, or $29,280 per airplane.

The cost impact figures discussed above are based on assumptions that no operator has yet accomplished any of the requirements of this AD action, and that no operator would accomplish those actions in the future if this AD were not adopted.

Regulatory Impact

The regulations adopted herein will not have substantial direct effects on the States, on the relationship between the national government and the States, or on the distribution of power and responsibilities among the various levels of government. Therefore, in accordance with Executive Order 12612, it is determined that this final rule does not have sufficient federalism implications to warrant the preparation of a Federalism Assessment.

For the reasons discussed above, I certify that this action (1) is not a ''significant regulatory action'' under Executive Order 12866; (2) is not a ''significant rule'' under DOT Regulatory Policies and Procedures (44 FR 11034, February 26, 1979); and (3) will not have a significant economic impact, positive or negative, on a substantial number of small entities under the criteria of the Regulatory Flexibility Act. A final evaluation has been prepared for this action and it is contained in the Rules Docket. A copy of it may be obtained from the Rules Docket at the location provided under the caption **ADDRESSES**.

List of Subjects in 14 CFR Part 39

Air transportation, Aircraft, Aviation safety, Incorporation by reference, Safety.

Adoption of the Amendment

Accordingly, pursuant to the authority delegated to me by the Administrator, the Federal Aviation Administration amends part 39 of the Federal Aviation Regulations (14 CFR part 39) as follows:

PART 39—AIRWORTHINESS DIRECTIVES

1. The authority citation for part 39 continues to read as follows:

Authority: 49 U.S.C. 106(g), 40113, 44701.

§ 39.13 [Amended]

2. Section 39.13 is amended by removing amendment 39–9992 (62 FR 17532, April 10, 1997), and by adding a new airworthiness directive (AD), amendment 39–10732, to read as follows:

98–18–16 Airbus Industrie: Amendment 39–10732. Docket 98–NM–01–AD. Supersedes AD 97–08–04, Amendment 39–9992.

Applicability: Model A320 series airplanes on which Airbus Modification 22764 has not been installed, certificated in any category.

Note 1: This AD applies to each airplane identified in the preceding applicability provision, regardless of whether it has been otherwise modified, altered, or repaired in the area subject to the requirements of this AD. For airplanes that have been modified, altered, or repaired so that the performance of the requirements of this AD is affected, the owner/operator must request approval for an alternative method of compliance in accordance with paragraph (d) of this AD. The request should include an assessment of the effect of the modification, alteration, or repair on the unsafe condition addressed by this AD; and, if the unsafe condition has not been eliminated, the request should include specific proposed actions to address it.

Compliance: Required as indicated, unless accomplished previously.

To prevent structural damage to the tail section when it strikes the runway, which could result in depressurization of the fuselage during flight, accomplish the following:

Restatement of Requirement of AD 97–08–04

(a) For airplanes listed in Airbus Service Bulletin A320–53–1110, dated August 28, 1995: Within 6 years after May 15, 1997 (the effective date of AD 97–08–04, amendment 39–9992), modify the fuselage by reinforcing frames 68 and 69 in accordance with Airbus Service Bulletin A320–53–1110, dated August 28, 1995; or Revision 1, dated November 27, 1995.

New Requirements of this AD

(b) For airplanes other than those identified in paragraph (a) of this AD: Within 5 years after the effective date of this AD, modify the fuselage by reinforcing frames 68 and 69 in accordance with Airbus Service Bulletin A320–53–1110, dated August 28, 1995, or Revision 1, dated November 27, 1995.

(c) For all airplanes: Within 5 years after the effective date of this AD, modify the fuselage by reinforcing frames 65 to 67 in accordance with Airbus Service Bulletin A320–53–1131, dated July 24, 1997.

(d) An alternative method of compliance or adjustment of the compliance time that provides an acceptable level of safety may be used if approved by the Manager, International Branch, ANM–116, FAA, Transport Airplane Directorate. Operators shall submit their requests through an appropriate FAA Principal Maintenance Inspector, who may add comments and then send it to the Manager, International Branch, ANM–116.

Note 2: Information concerning the existence of approved alternative methods of compliance with this AD, if any, may be obtained from the International Branch, ANM–116.

(e) Special flight permits may be issued in accordance with §§ 21.197 and 21.199 of the Federal Aviation Regulations (14 CFR 21.197 and 21.199) to operate the airplane to a location where the requirements of this AD can be accomplished.

(f) The modifications shall be done in accordance with Airbus Service Bulletin A320–53–1131, dated July 24, 1997; Airbus Service Bulletin A320–53–1110, dated August 28, 1995; and Airbus Service Bulletin A320–53–1110, Revision 1, dated November 27, 1995, which contains the following list of effective pages:

Page No.	Revision level shown on page	Date shown on page
1–8, 10–13, 15–20, 23–40, 42, 44–45	Original	August 28, 1995.

Page No.	Revision level shown on page	Date shown on page
9, 14, 21–22, 41, 43	Revision 1	November 27, 1995.

(1) The incorporation by reference of Airbus Service Bulletin A320–53–1110, Revision 1, dated November 27, 1995, and Airbus Service Bulletin A320–53–1131, dated July 24, 1997, is approved by the Director of the Federal Register in accordance with 5 U.S.C. 552(a) and 1 CFR part 51.

(2) The incorporation by reference of Airbus Service Bulletin A320–53–1110, dated August 28, 1995, was approved previously by the Director of the Federal Register as of May 15, 1997 (62 FR 17532, April 10, 1997).

(3) Copies may be obtained from Airbus Industrie, 1 Rond Point Maurice Bellonte, 31707 Blagnac Cedex, France. Copies may be inspected at the FAA, Transport Airplane Directorate, 1601 Lind Avenue, SW., Renton, Washington; or at the Office of the Federal Register, 800 North Capitol Street, NW., suite 700, Washington, DC.

Note 3: The subject of this AD is addressed in French airworthiness directive 97–315–109(B), dated October 22, 1997.

(g) This amendment becomes effective on October 8, 1998.

Issued in Renton, Washington, on August 26, 1998.

Vi L. Lipski,

Acting Manager, Transport Airplane Directorate, Aircraft Certification Service.

[FR Doc. 98–23604 Filed 9–2–98; 8:45 am]

BILLING CODE 4910–13–U

DEPARTMENT OF TRANSPORTATION

Federal Aviation Administration

14 CFR Part 39

[Docket No. 98–NM–183–AD; Amendment 39–10743; AD 94–13–02 R1]

RIN 2120–AA64

Airworthiness Directives; Boeing Model 757–200, –200PF, and –200CB Series Airplanes Equipped with Rolls-Royce Model RB211–535E4/E4B Engines

AGENCY: Federal Aviation Administration, DOT.

ACTION: Final rule; request for comments.

SUMMARY: This amendment revises an existing airworthiness directive (AD), applicable to certain Boeing Model 757 series airplanes, that currently requires tests of the thrust reverser system, and repair, if necessary; installation of a modification that terminates those tests; and repetitive operational checks of that installation, and repair, if necessary. This amendment limits the applicability of the existing AD by including the specific series of the affected airplanes. This amendment is prompted by the upcoming type certification of the Model 757–300 series airplane, which will address the requirements of this amendment during the type certification process. The actions specified in this AD are intended to prevent deployment of a thrust reverser in flight and subsequent reduced controllability of the airplane.

DATES: September 18, 1998.

The incorporation by reference of certain publications, as listed in the regulations, was approved previously by the Director of the Federal Register as of July 20, 1994 (59 FR 31512, June 20, 1994).

Comments for inclusion in the Rules Docket must be received on or before November 2, 1998.

ADDRESSES: Submit comments in triplicate to the Federal Aviation Administration (FAA), Transport Airplane Directorate, ANM–114, Attention: Rules Docket No. 98–NM–183–AD, 1601 Lind Avenue, SW., Renton, Washington 98055–4056.

The service information referenced in this AD may be obtained from Boeing Commercial Airplane Group, P.O. Box 3707, Seattle, Washington 98124–2207. This information may be examined at the FAA, Transport Airplane Directorate, 1601 Lind Avenue, SW., Renton, Washington; or at the Office of the Federal Register, 800 North Capitol Street, NW., suite 700, Washington, DC.

FOR FURTHER INFORMATION CONTACT: Katherine Rask, Aerospace Engineer, Propulsion Branch, ANM–140S, FAA, Transport Airplane Directorate, Seattle Aircraft Certification Office, 1601 Lind Avenue, SW., Renton, Washington 98055–4056; telephone (425) 227–1547; fax (425) 227–1181.

SUPPLEMENTARY INFORMATION: On June 13, 1994, the FAA issued AD 94–13–02, amendment 39–8942 (59 FR 31512, June 20, 1994), applicable to certain Boeing Model 757 series airplanes, to require tests of the thrust reverser system, and repair, if necessary; installation of a modification that terminates those tests; and repetitive operational checks of that installation, and repair, if necessary. That action was prompted by results of a safety review, which revealed that in-flight deployment of a thrust reverser could result in a significant reduction in the controllability of the airplane. The actions required by that AD are intended to prevent deployment of a thrust reverser in flight and subsequent reduced controllability of the airplane.

Actions Since Issuance of Previous Rule

Since the issuance of that AD, Boeing has developed the Model 757–300 series airplane, equipped with Rolls-Royce Model RB211–535E4/E4B engines. This model is expected to be type certificated in early 1999. As part of the type certification of the Model 757–300 series airplane, the requirements of this amendment will be addressed during the type certification process. Therefore, the FAA has revised the applicability of the existing AD to include the specific series of the affected airplanes as Model 757–200 series airplanes.

Explanation of Requirements of Proposed Rule

Since an unsafe condition has been identified that is likely to exist or develop on other products of this same type design, this AD revises AD 94–13–02 to continue to require tests of the thrust reverser system, and repair, if necessary; installation of a modification that terminates those tests; and repetitive operational checks of that installation, and repair, if necessary. This AD limits the applicability of the existing AD by including the specific series of the affected airplanes.

Cost Impact

There are approximately 376 Model 757–200 series airplanes of the affected design in the worldwide fleet. The FAA estimates that 95 airplanes of U.S. registry will be required to accomplish the restow and integrity tests required by this AD, that it will take approximately 1 work hour per airplane to accomplish those tests, and that the average labor rate is $60 per work hour. Based on these figures, the cost impact of the AD on U.S. operators to accomplish each operational test is estimated to be $5,700, or $60 per airplane.

The FAA estimates that 95 airplanes of U.S. registry will be required to accomplish either modification specified in paragraphs (b)(1) or (b)(2) of this AD. It will take approximately 506 work hours per airplane to accomplish either of those modifications, and the

average labor rate is $60 per work hour. Required parts will be supplied by the manufacturer at no cost to operators. Based on these figures, the cost impact of the AD on U.S. operators to accomplish the modification is estimated to be $2,884,200, or $30,360 per airplane, per test cycle.

The FAA also estimates that 232 airplanes of U.S. registry will be required to accomplish the periodic operational tests of the sync-lock installation required by this AD, that it will take approximately 1 work hour per airplane to accomplish each test, and that the average labor rate is $60 per work hour. Based on these figures, the cost impact of the AD on U.S. operators to accomplish each operational test is estimated to be $13,920, or $60 per airplane, per test cycle.

Based on these figures, the cost impact of the AD on U.S. operators is estimated to be $2,903,820.

The cost impact figures discussed above are based on assumptions that no operator has yet accomplished any of the proposed requirements of this AD action, and that no operator would accomplish those actions in the future if this AD were not adopted.

Determination of Rule's Effective Date

Since this AD action limits the applicability of an existing AD, it has no adverse economic impact and imposes no additional burden on any person. Therefore, prior notice and public procedures hereon are unnecessary and the amendment may be made effective in less than 30 days after publication in the **Federal Register**.

Comments Invited

Although this action is in the form of a final rule and was not preceded by notice and opportunity for public comment, comments are invited on this rule. Interested persons are invited to comment on this rule by submitting such written data, views, or arguments as they may desire. Communications shall identify the Rules Docket number and be submitted in triplicate to the address specified under the caption **ADDRESSES**. All communications received on or before the closing date for comments will be considered, and this rule may be amended in light of the comments received. Factual information that supports the commenter's ideas and suggestions is extremely helpful in evaluating the effectiveness of the AD action and determining whether additional rulemaking action would be needed.

Comments are specifically invited on the overall regulatory, economic, environmental, and energy aspects of the rule that might suggest a need to modify the rule. All comments submitted will be available, both before and after the closing date for comments, in the Rules Docket for examination by interested persons. A report that summarizes each FAA-public contact concerned with the substance of this AD will be filed in the Rules Docket.

Commenters wishing the FAA to acknowledge receipt of their comments submitted in response to this rule must submit a self-addressed, stamped postcard on which the following statement is made: ''Comments to Docket Number 98–NM–183–AD.'' The postcard will be date stamped and returned to the commenter.

Regulatory Impact

The regulations adopted herein will not have substantial direct effects on the States, on the relationship between the national government and the States, or on the distribution of power and responsibilities among the various levels of government. Therefore, in accordance with Executive Order 12612, it is determined that this final rule does not have sufficient federalism implications to warrant the preparation of a Federalism Assessment.

For the reasons discussed above, I certify that this action (1) is not a ''significant regulatory action'' under Executive Order 12866; (2) is not a ''significant rule'' under DOT Regulatory Policies and Procedures (44 FR 11034, February 26, 1979); and (3) will not have a significant economic impact, positive or negative, on a substantial number of small entities under the criteria of the Regulatory Flexibility Act. A final evaluation has been prepared for this action and it is contained in the Rules Docket. A copy of it may be obtained from the Rules Docket at the location provided under the caption **ADDRESSES**.

List of Subjects in 14 CFR Part 39

Air transportation, Aircraft, Aviation safety, Incorporation by reference, Safety.

Adoption of the Amendment

Accordingly, pursuant to the authority delegated to me by the Administrator, the Federal Aviation Administration amends part 39 of the Federal Aviation Regulations (14 CFR part 39) as follows:

PART 39—AIRWORTHINESS DIRECTIVES

1. The authority citation for part 39 continues to read as follows:

Authority: 49 U.S.C. 106(g), 40113, 44701.

§ 39.13 [Amended]

2. Section 39.13 is amended by removing amendment 39–8942 (59 FR 31512, June 20, 1994), and by adding a new airworthiness directive (AD), amendment 39–10743, to read as follows:

94–13–02 R1 Boeing: Amendment 39–10743. Docket 98–NM–183–AD. Revises AD 94–13–02, Amendment 39–8942.

Applicability: Model 757–200, –200PF, and –200CB series airplanes equipped with Rolls-Royce Model RB211–535E4/E4B engines, certificated in any category.

Note 1: This AD applies to each airplane identified in the preceding applicability provision, regardless of whether it has been modified, altered, or repaired in the area subject to the requirements of this AD. For airplanes that have been modified, altered, or repaired so that the performance of the requirements of this AD is affected, the owner/operator must request approval for an alternative method of compliance in accordance with paragraph (d) of this AD. The request should include an assessment of the effect of the modification, alteration, or repair on the unsafe condition addressed by this AD; and, if the unsafe condition has not been eliminated, the request should include specific proposed actions to address it.

Compliance: Required as indicated, unless accomplished previously.

To prevent deployment of a thrust reverser in flight and consequent reduced controllability of the airplane, accomplish the following:

(a) For airplanes on which the sync-lock feature was not installed during production or as a modification in accordance with Boeing Service Bulletin 757–78–0032, Revision 2, dated May 12, 1994: Within 4,000 hours time-in-service after July 20, 1994 (the effective date of AD 94–13–02, amendment 39–8942); and thereafter at intervals not to exceed 4,000 hours time-in-service until the modification required by paragraph (b) of this AD is accomplished; accomplish paragraphs (a)(1) and (a)(2) of this AD to verify proper operation of the thrust reverser system. Prior to further flight, repair any discrepancy found, in accordance with the procedures described in the Boeing 757 Maintenance Manual.

(1) Perform a ''Thrust Reverser-Auto Restow Test'' in accordance with the procedures described in Section 78–31–00 of the Boeing 757 Maintenance Manual.

(2) Perform an ''Actuator Lock and Crossover Shaft Integrity Test'' in accordance with the procedures described in Section 78–31–00 of the Boeing 757 Maintenance Manual.

(b) For airplanes on which the sync-lock feature was not installed during production or as a modification in accordance with Boeing Service Bulletin 757–78–0032, Revision 2, dated May 12, 1994: Within 5 years after July 20, 1994, accomplish the requirements of either paragraph (b)(1) or (b)(2) of this AD. Accomplishment of either of these installations constitutes terminating action for the tests required by paragraph (a) of this AD.

(1) Install an additional thrust reverser system locking feature (sync-lock installation) in accordance with Boeing Service Bulletin 757–78–0032, Revision 2, dated May 12, 1994.

Note 2: Revision 2 of Boeing Service Bulletin 757–78–0032 references Rolls-Royce Service Bulletins RB.211–78–9613 and RB.211–78–9627 as additional sources of service information. The intent of paragraph (b)(1) of this AD is that the appropriate revision levels of the Rolls-Royce service bulletins to be used in conjunction with Boeing Service Bulletin 757–78–0032 are as follows: Rolls-Royce Service Bulletin RB.211–78–9613, dated December 3, 1992, or Revision 1, dated March 5, 1993, or Revision 2, dated October 1, 1993; and Rolls-Royce Service Bulletin RB.211–78–9627, dated December 3, 1992.

(2) Install a revised thrust reverser sync-lock in accordance with Boeing Service Bulletin 757–78–0032, Revision 2, dated May 12, 1994, and Rolls-Royce Service Bulletin RB.211–78–9822, dated October 1, 1993.

Note 3: Rolls-Royce Service Bulletin RB.211–78–9822 references Rolls-Royce Service Bulletin RB.211–78–9613 as an additional source of service information for airplanes equipped with Rolls-Royce RB211–535E4/E4B engines. Rolls-Royce Service Bulletin RB.211–78–9613 references Rolls-Royce Service Bulletin RB.211–78–9627 as an additional source of service information. The FAA's intent is that the appropriate revision levels to be used in conjunction with Rolls-Royce Service Bulletin RB.211–78–9822 are as follows: Rolls-Royce Service Bulletin RB.211–78–9613, Revision 2, dated October 1, 1993; and Rolls-Royce Service Bulletin RB.211–78–9627, dated December 3, 1992.

(c) Within 4,000 hours time-in-service after accomplishing the modification required by paragraph (b) of this AD, or within 4,000 hours time-in-service after July 20, 1994, whichever occurs later; and thereafter at intervals not to exceed 4,000 hours time-in-service: Accomplish the ''Thrust Reverser Sync-Lock Integrity Test'' specified below to verify that the sync-locks have not failed in the ''unlocked'' state. Prior to further flight, repair any discrepancy found, in accordance with procedures described in the Boeing 757 Maintenance Manual.

THRUST REVERSER SYNC-LOCK INTEGRITY TEST

1. *General*
   A. Use this procedure to test the integrity of the thrust reverser sync locks. The procedure must be performed on each engine.
2. *Thrust Reverser Sync Lock Test*
   A. Prepare for the thrust reverser sync lock test.
   (1) Open the AUTO SPEEDBRAKE circuit breaker on the overhead circuit breaker panel, P11.
   (2) Do steps 2.A.(2)(a) through 2.A.(2)(f) to supply power to the thrust reverser system:
   (a) Make sure the thrust levers are in the idle position.
   (b) Make sure the thrust reversers are retracted and locked.
   (c) Make sure these circuit breakers on the main power distribution panel, P6, are closed:
   (1) L ENG SYNC LOCK
   (2) R ENG SYNC LOCK–ALTN
   (d) Make sure these circuit breakers on the overhead circuit breaker panel, P11, are closed:
   (1) LANDING GEAR POS SYS 1
   (2) T/R IND R
   (3) T/R CONT–ALTN–R
   (4) T/R IND L
   (5) T/R CONT L
   (6) R ENG SYNC LOCK
   (7) T/R CONT R
   (8) EICAS CMPTR LEFT
   (9) EICAS UPPER IND
   (10) EICAS CMPTR RIGHT
   (11) EICAS LOWER IND
   (12) EICAS DISPLAY SW
   (13) EICAS PILOTS DSP
   (14) AIR/GND SYS 1
   (15) AIR/GND SYS 2
   (16) LANDING GEAR POS SYS 2
   (17) PROX SW TEST
   (e) Supply electrical power.
   (f) Supply pressure to the left (for the left engine) or right (for the right engine) hydraulic system.
   B. Do the thrust reverser sync lock test.
   (1) Use the SENSOR CHANNEL SELECT thumb switches to set the PSEU code for the auto-restow proximity sensor.
   (a) On PSEU (–17), The left engine code is 433.
   (b) On PSEU (–16), The left engine code is 105.
   (c) The right engine PSEU code is 099.

Note: Step 2.B.(2) will cause the Hydraulic Isolation Valve (HIV) to open for approximately 5 seconds. Steps 2.B.(3) through 2.B.(5) must be done during this 5 second time. Steps 2.B.(2) through 2.B.(5) may be repeated if necessary.

   (2) Push the TARGET TEST switch on the PSEU and hold for one second.
   (3) Make sure the TARGET NEAR light on the PSEU comes on after approximately four seconds.
   (4) Make sure that the EICAS Advisory message L(R) REV ISLN VAL shows for approximately 3 seconds and then does not show.
   (5) Make sure the sync lock manual unlock lever on the right sleeve of the reverser does not extend.
   (6) Push and release the RESET switch on the PSEU.
   (7) Open the applicable circuit breaker(s):
   (a) For the left engine;
   L ENG SYNC LOCK (Panel P6)
   (b) For the right engine;
   R ENG SYNC LOCK (Panel P11)
   R ENG SYNC LOCK–ALTN (Panel P6)
   (8) Move the left (right) reverse thrust lever up and rearward to the reverse thrust position.
   (9) Make sure that the thrust reverser does not extend.
   (10) Move the left (right) reverse thrust lever to the forward and down position.
   C. Put the airplane back to its usual condition.
   (1) Remove hydraulic pressure.
   (2) Close the applicable circuit breaker(s).
   (a) For the left engine;
   L ENG SYNC LOCK (Panel P6)
   (b) For the right engine;
   R ENG SYNC LOCK (Panel P11)
   R ENG SYNC LOCK–ALTN (Panel P6)
   (3) Close the AUTO SPEEDBRAKE circuit breaker on the overhead circuit breaker panel, P11.
   (4) Remove electrical power.
   D. Repeat the thrust reverser sync lock test on the other engine.

(d) An alternative method of compliance or adjustment of the compliance time that provides an acceptable level of safety may be used if approved by the Manager, Seattle Aircraft Certification Office (ACO), FAA, Transport Airplane Directorate. Operators shall submit their requests through an appropriate FAA Principal Maintenance Inspector, who may add comments and then send it to the Manager, Seattle ACO.

Note 4: Information concerning the existence of approved alternative methods of compliance with this AD, if any, may be obtained from the Seattle ACO.

(e) Special flight permits may be issued in accordance with §§ 21.197 and 21.199 of the Federal Aviation Regulations (14 CFR 21.197 and 21.199) to operate the airplane to a location where the requirements of this AD can be accomplished.

(f) The installation shall be done in accordance with Boeing Service Bulletin 757–78–0032, Revision 2, dated May 12, 1994, and/or Rolls-Royce Service Bulletin RB.211–78–9822, dated October 1, 1993. This incorporation by reference was approved previously by the Director of the Federal Register in accordance with 5 U.S.C. 552(a) and 1 CFR part 51, as of July 20, 1994 (59 FR 31512, June 20, 1994). Copies may be obtained from Boeing Commercial Airplane Group, P.O. Box 3707, Seattle, Washington 98124–2207. Copies may be inspected at the FAA, Transport Airplane Directorate, 1601 Lind Avenue, SW., Renton, Washington; or at the Office of the Federal Register, 800 North Capitol Street, NW., suite 700, Washington, DC.

(g) This amendment becomes effective on September 18, 1998.

Issued in Renton, Washington, on August 28, 1998.

Vi L. Lipski,

Acting Manager, Transport Airplane Directorate, Aircraft Certification Service.

[FR Doc. 98–23742 Filed 9–2–98; 8:45 am]

BILLING CODE 4910–13–M

DEPARTMENT OF TRANSPORTATION

14 CFR Part 71

[Airspace Docket No. 98–AGL–32]

Modification of Class E Airspace; Prairie Du Chien, WI; Correction

AGENCY: Federal Aviation Administration (FAA), DOT.

ACTION: Final rule; correction.

SUMMARY: This action corrects on error in the legal description of a final rule

that was published in the **Federal Register** on July 23, 1998 (63 FR 39497), Airspace Docket No. 98–AGL–32. The final rule modified Class E Airspace at Prairie Du Chien, WI.

EFFECTIVE DATE: 0901 UTC, October 08, 1998.

FOR FURTHER INFORMATION CONTACT: Michelle M. Behm, Air Traffic Division, Airspace Branch, AGL–520, Federal Aviation Administration, 2300 East Devon Avenue, Des Plaines, IL 60018, telephone: (847) 294–7477.

SUPPLEMENTARY INFORMATION:

History

Federal Register Document 98–19582, Airspace Docket No. 98–AGL–32, published on July 23, 1998 (63 FR 39497) rule modified Class E Airspace at Prairie Du Chien, WI. One error was discovered in the legal description for the Class E airspace for Prairie Du Chien, WI. This action corrects that error.

Correction to Final Rule

Accordingly, pursuant to the authority delegated to me, the legal description for the Class E airspace Prairie Du Chien, WI, as published in the **Federal Register** July 23, 1998 (63 FR 39497), (FR Doc. 98–19582), is corrected as follows:

PART 71—[CORRECTED]

§ 71.1 [Corrected]

AGL WI E5 Prairie Du Chien, WI [Corrected]

On page 39498, Column 1, in the Class E airspace designation for Prairie Du Chien, WI, incorporated by reference in Sec. 71.1, change the coordinates for the Waukon VORTAC to ''(lat. 43°16′48″N, long. 91°32′15″W)''.

Issued in Des Plaines, IL on August 21, 1998.

David B. Johnson,

Acting Manager, Air Traffic Division, Great Lakes Region.

[FR Doc. 98–23775 Filed 9–2–98; 8:45 am]

BILLING CODE 4910–13–M

SECURITIES AND EXCHANGE COMMISSION

17 CFR Part 240

[Release No. 34–40018A; IC–23200A; File No. S7–25–97]

RIN 3235–AH20

Amendments to Rules on Shareholder Proposals; Corrections

AGENCY: Securities and Exchange Commission.

ACTION: Correction to final rules.

SUMMARY: This document contains corrections to the final regulations which were published on May 28, 1998 [63 FR 29106] relating to amendments to rules on shareholder proposals.

EFFECTIVE DATES: September 3, 1998.

FOR FURTHER INFORMATION CONTACT: Sanjay M. Shirodkar, Division of Corporation Finance, at (202) 942–2900, or Doretha M. VanSlyke, Division of Investment Management, at (202) 942–0721, Securities and Exchange Commission, 450 Fifth Street, NW, Washington, DC 20549.

SUPPLEMENTARY INFORMATION: The Commission adopted amendments to rules on Shareholder Proposals on May 21, 1998. As published, the rules contain an error with respect to a cross-reference. In this release, this error is being corrected. Accordingly, the publications on May 28, 1998 of the final regulations, which were the subject of FR Doc. 98–14121, is corrected as follows:

On page 29119, in the first column, beginning in the third line, the reference to ''§ 240.14a–8(d)(Question 4)'' is revised to read ''§ 240.14a–8(e)(Question 5)''.

Dated: August 27, 1998.

Jonathan G. Katz,

Secretary.

[FR Doc. 98–23768 Filed 9–2–98; 8:45 am]

BILLING CODE 8010–01–M

DEPARTMENT OF TRANSPORTATION

National Highway Traffic Safety Administration

Federal Highway Administration

23 CFR Part 1225

[Docket No. NHTSA–98–4394]

RIN 2127–AH39

Operation of Motor Vehicles by Intoxicated Persons

AGENCY: National Highway Traffic Safety Administration (NHTSA) and Federal Highway Administration (FHWA), Department of Transportation (DOT).

ACTION: Interim final rule; request for comments.

SUMMARY: This interim final rule implements a new program established by the Transportation Equity Act for the 21st Century (TEA 21), under which States can qualify for incentive grant funds if they enact and enforce a law that provides that any person with a blood alcohol concentration of 0.08 percent or greater while operating a motor vehicle in the State shall be deemed to have committed a *per se* offense of driving while intoxicated or an equivalent *per se* offense. This interim final rule solicits public comments.

DATES: This interim final rule becomes effective on September 3, 1998. Comments must be received by October 19, 1998.

ADDRESSES: Written comments should refer to the docket number of this notice and be submitted (preferably two copies) to: Docket Management, Room PL–401, National Highway Traffic Safety Administration, Nassif Building, 400 Seventh Street, S.W., Washington, D.C. 20590. (Docket hours are Monday-Friday, 10 a.m. to 5 p.m., excluding Federal holidays.)

FOR FURTHER INFORMATION CONTACT: In NHTSA: Ms. Marlene Markison, Office of State and Community Services, NSC–01, telephone (202) 366–2121; or Ms. Heidi L. Coleman, Office of Chief Counsel, NCC–30, telephone (202) 366–1834.

In FHWA: Byron Dover, Office of Highway Safety, HHS–10, telephone (202) 366–2161; or Mr. Raymond W. Cuprill, HCC–20, telephone (202) 366–0834.

SUPPLEMENTARY INFORMATION: The Transportation Equity Act for the 21st Century (TEA 21), Pub. L. 105–178, was signed into law on June 9, 1998. Section 1404 of the Act established a new incentive grant program under Section 163 of Title 23, United States Code (Section 163). Under this new program, States may qualify for incentive grant funds by enacting and enforcing laws that provide that ''any person with a blood alcohol concentration (BAC) of 0.08 percent or greater while operating a motor vehicle in the State shall be deemed to have committed a *per se* offense of driving while intoxicated (or an equivalent *per se* offense).''

This new program was put into place to address the issue of impaired driving, which continues to be a serious national problem with tragic consequences. The agencies believe that 0.08 BAC laws will have a significant impact on reducing this problem.

Background

The Problem of Impaired Driving

Injuries caused by motor vehicle traffic crashes are a major health care problem in America and are the leading cause of death for people aged 6 to 27. Each year, the injuries caused by traffic crashes in the United States claim approximately 42,000 lives and cost

Americans an estimated $150 billion, including $19 billion in medical and emergency expenses, $42 billion in lost productivity, $52 billion in property damage, and $37 billion in other crash related costs.

In 1996, alcohol was involved in approximately 41 percent of fatal traffic crashes. Every 30 minutes, someone in this country dies in an alcohol-related crash. In 1994, alcohol-involved crashes resulted in $45 billion in economic costs, accounting for 30 percent of all crash costs. Impaired driving is the most frequently committed violent crime in America.

Impaired Driving Laws

States have enacted a number of different types of laws in their efforts to fight the battle against impaired driving. For example, forty-eight States and the District of Columbia have enacted ''illegal *per se*'' laws. Two States and Puerto Rico have not. An illegal *per se* law makes it illegal, in and of itself, to drive with an alcohol concentration measured at or above the established legal limit.

In 32 of the States with illegal *per se* laws and in the District of Columbia, the legal limit is 0.10 percent blood alcohol concentration (BAC). Sixteen States have enacted laws that establish 0.08 BAC as the legal limit. (Fifteen of these laws are currently in effect. One is due to become effective on January 1, 1999.)

The Effectiveness of 0.08 BAC Laws

A number of studies have been conducted to determine the effectiveness of 0.08 BAC laws.

The effect of California's 0.08 law was analyzed, for example, in a 1991 NHTSA study. The agency found that 81 percent of the driving population knew that the BAC limit had become stricter (as the result of a successful public education effort). The State experienced a 12 percent reduction in alcohol-related fatalities, although some of the reduction may have resulted from a new administrative license revocation law that was enacted during the same year that the BAC standard was lowered. The State also experienced an increase in the number of impaired driving arrests.

A multi-state analysis of the effect of lowering BAC levels to 0.08 was conducted by Boston University's School of Public Health. The results of that study were reported in the September 1996 issue of the American Journal of Public Health, a peer-reviewed journal. The Boston University study compared the first five states to lower their BAC limit to 0.08 (California, Maine, Oregon, Utah and Vermont) with five nearby states that retained the 0.10 BAC limit. The results of this study suggest that 0.08 BAC laws, particularly in combination with administrative license revocation, reduce the proportion of fatal crashes involving drivers and fatally injured drivers at blood alcohol levels of 0.08 percent and higher by 16 percent and those at a BAC of 0.15 percent and greater by 18 percent.

The immediate significance of these findings is that, the 0.08 BAC laws, particularly in combination with administrative license revocation, not only reduced the overall incidence of alcohol fatalities, but they also reduced fatalities at the *higher* BAC levels. The effect on the number of extremely impaired drivers was even greater than the overall effect.

The study concluded that if all States lowered their BAC limits to 0.08, alcohol-related highway deaths would decrease nationwide by 500–600 per year, which would result in an economic cost savings of approximately $1.5 billion.

In a 1995 NHTSA analysis of the same five States studied by Boston University, the agency examined six different measures of driver alcohol involvement in fatal crashes and compared the time period before the 0.08 law was passed with the time period after passage of the law for each State. A total of thirty comparisons of the level of driver alcohol involvement were made. Nine of the thirty comparisons (in four of the five States) showed statistically significant decreases. An additional 16 comparisons, while not statistically significant, also showed decreases. None of the comparisons for the rest of the nation (States at 0.10 BAC) showed changes that were statistically significant.

Other studies published on the effects of enacting 0.08 BAC laws, which use various different measures, have all shown significant decreases in alcohol-related fatalities. NHTSA surveys all show that most people would not drive after consuming two or three drinks in an hour (the amount of alcohol an average 120-pound woman would have to drink on an empty stomach to reach 0.08 BAC; an average 170-pound man would have to consume 4–5 drinks in an hour on an empty stomach to reach that BAC level). In addition, three recent scientific telephone polls indicate that two out of every three Americans think the BAC standard should be lowered to 0.08.

Presidential Support for a National Standard at 0.08 BAC

President Clinton strongly supports the enactment of 0.08 BAC laws by the States. In fact, on March 3, 1998, the President addressed the Nation about his interest in promoting a national illegal *per se* limit of 0.08 BAC across the country, including on Federal property. During his address, the President called on Congress to pass impaired driving legislation that would establish a national 0.08 BAC *per se* standard.

On March 4, 1998, the United States Senate passed ''The Safe and Sober Streets Act of 1997,'' which had been introduced by Senator Frank Lautenberg (D–NJ) and Senator Mike DeWine (R–OH). Similar legislation was introduced in the U.S. House of Representatives by Rep. Nita Lowey (D–NY).

The Safe and Sober Streets Act would have required the withholding of certain Federal-aid highway funds from States that do not enact and enforce 0.08 BAC *per se* laws. To avoid the withholding of funds, States would have been required to enact and enforce 0.08 BAC *per se* laws by October 1, 2001. This legislation, however, was not enacted into law.

Instead, Congress passed an incentive grant program to encourage State enactment of 0.08 BAC laws. This program was included in TEA 21 (H.R. 2400). On June 9, 1998, President Clinton signed the legislation and remarked, in his signing statement:

> Today I am pleased to sign into law H.R. 2400, the ''Transportation Equity Act for the 21st Century.'' This comprehensive infrastructure measure for our surface transportation programs—highway, highway safety, and transit—retains the core programs and builds on the initiatives established in the landmark Intermodal Surface Transportation Efficiency Act of 1991.
>
> * * * * *
>
> I am deeply disappointed, however, that H.R. 2400 fails to include language that would help to establish 0.08 percent [BAC] as the standard for drunk driving in each of the 50 States. The experience of States that have adopted the 0.08 blood alcohol level shows that this stringent measure against drunk driving has the potential, when applied nationwide, to save hundreds of lives each year. Applying 0.08 nationwide is an important cornerstone of our safety efforts. My Administration will continue to fight for it. In the meantime, H.R. 2400 does establish a new $500 million incentive program encouraging the States to adopt tough 0.08 BAC laws.

Adoption of 0.08 BAC Law

Section 163 specifically provides that the Secretary of Transportation shall make a grant to any State that has enacted and is enforcing a law that provides that any person with a blood alcohol concentration of 0.08 percent or greater while operating a motor vehicle in the State shall be deemed to have

committed a *per se* offense of driving while intoxicated or an equivalent *per se* offense.

Consistent with other grant programs that are administered by the agencies, a State's law must have been both passed and made effective to permit a State to qualify for funding based on that law. In addition, the State must have begun to implement the law.

Compliance Criteria

To qualify for funding under this program, Section 163 provides that a State must enact and enforce:

a law that provides that any person with a blood alcohol concentration of 0.08 percent or greater while operating a motor vehicle in the State shall be deemed to have committed a *per se* offense of driving while intoxicated or an equivalent *per se* offense.

Section 163 does not define any of these terms, and it does not contain many details about what conforming State laws must provide. For example, it does not specify the penalties that must be imposed on offenders who violate 0.08 BAC *per se* laws. Since Section 163 does not prescribe the penalties that must be imposed on offenders who violate 0.08 BAC laws, the agencies have not specified any minimum penalties in the implementing regulation.

The agencies believe that, while Congress intended to encourage all States to enact and enforce effective 0.08 BAC laws, it also intended to provide States with sufficient flexibility to develop laws that suit their particular conditions. Accordingly, the agencies' implementing regulation prescribes only a limited number of basic elements that State laws must meet to qualify for these incentive grant funds.

This interim final rule defines those basic elements. The elements are described below:

1. Any Person

To qualify for funds under this program, a State must enact and enforce a law that establishes a BAC limit of 0.08 or greater that applies to *all persons*. The law can provide for no exceptions.

2. Blood Alcohol Concentration (BAC) of 0.08 Percent

To qualify for funds under this program, a State must set a level of no more than *0.08 percent* as the legal limit for blood alcohol concentration, thereby making it an offense for any person to have a BAC of 0.08 or greater while operating a motor vehicle. If a State were to enact a law that set a lower percentage (such as 0.07 percent) as the legal limit, such a law would also conform to the Federal requirement, since all persons with a BAC of 0.08 or greater would be covered.

3. *Per Se* Law

To qualify for funds under this program, a State must consider persons who have a BAC of 0.08 percent or greater while operating a motor vehicle in the State to have committed a *per se offense* of driving while intoxicated.

In other words, States must establish a 0.08 ''*per se*'' law, that makes driving with a BAC of 0.08 percent or above, in and of itself, an offense.

The agencies are aware of two States (Massachusetts and South Carolina) that have laws that make it unlawful for a person to drive while under the influence of alcohol, but do not establish a BAC limit at or above which it is illegal *per se* to drive. These laws provide that a BAC of 0.08 percent or above creates an ''inference'' or a ''permissible inference'' that the person committed the offense. However, since these laws do not make the operation of a motor vehicle with a BAC of 0.08 a ''*per se*'' offense, they do not conform to the Federal requirement.

In addition, some States have ''*per se*'' laws at the 0.10 BAC level, and provide that a lower BAC level, such as 0.08 or even lower, creates a presumption or can be used as *prima facie* evidence of a violation of an impaired driving offense. Again, since these States do not have laws that make the operation of a motor vehicle with a BAC of 0.08 a ''*per se*'' offense, they do not conform to the Federal requirement.

4. Primary Enforcement

To qualify for funds under this program, a State must enact and enforce a 0.08 BAC law that provides for *primary enforcement*.

Under a primary enforcement law, law enforcement officials have the authority to enforce the law without, for example, the need to show that they had probable cause or had cited the offender for a violation of another offense. Any State with a law that provides for secondary enforcement of its 0.08 BAC provision will not qualify for funds under this program.

5. Both Criminal and ALR Laws

To qualify for funds under this program, a State must establish a 0.08 BAC *per se* level under its *criminal code*. In addition, if the State has an administrative license revocation or suspension (ALR) law, the State must establish an illegal 0.08 BAC *per se* level under its *ALR law*, as well.

For example, if a State were to include a 0.08 BAC *per se* provision in its ALR law, but retained a higher BAC (such as 0.10) or a *prima facie* (as opposed to a *per se*) provision in its criminal code, the State would not qualify for funding under this program. If a State were to include a conforming 0.08 BAC *per se* provision in its criminal code, and the State did not have an ALR law, the State could qualify for Federal funding.

6. Standard Driving While Intoxicated Offense

To qualify for funds under this program, the State's 0.08 BAC *per se* law must be deemed to be or equivalent to the State's *standard driving while intoxicated offense*. As explained above, 48 States and the District of Columbia have ''illegal *per se*'' laws, under which it is unlawful, in and of itself, for a person to operate a motor vehicle with a BAC at or above a specified level. All 50 States, plus the District of Columbia and Puerto Rico (each of the jurisdictions that are considered States and therefore are potentially eligible for funding under the Section 163 program) have non-BAC *per se* offenses, under which it is unlawful for a person to operate a motor vehicle while intoxicated. This non-BAC *per se* offense is the standard driving while intoxicated offense in each State.

The agencies recognize that some States do not use the term ''intoxicated'' or ''driving while intoxicated'' in their laws. Some States use other terms, such as ''driving under the influence of alcohol'' to describe this offense. Section 163 does not require that a single term be used. It requires only that operating a motor vehicle with a BAC of 0.08 be deemed to be a *per se* offense and (regardless of the nomenclature used) that it be deemed to be or equivalent to the ''standard'' driving while intoxicated offense in the State.

Most States provide for a single driving while intoxicated offense, but some States have established more than one offense that relates to impaired or intoxicated driving. The most serious offense generally will be the State's ''standard'' driving while intoxicated offense (although it might be called by another name, such as ''driving under the influence''). The State may have a less-serious offense, which generally will be a ''lesser-included'' offense of the standard driving while intoxicated offense. (This ''less-serious'' offense is often referred to as ''driving while impaired.'')

The State of New York, for example, has established a two-tiered system. ''Driving while intoxicated'' is the ''standard'' offense in New York. Persons violate the offense by operating

a vehicle at a BAC of 0.10. They also violate the offense through a non-BAC *per se* provision, by operating a vehicle ''while in an intoxicated condition.'' A person's BAC level is just one piece of evidence that would be used to prove a violation under this provision.

''Driving while ability impaired'' is the ''less-serious'' offense in New York. ''Driving while ability impaired'' is not a BAC *per se* offense in New York. Persons violate that offense by operating a vehicle ''while the person's ability to operate such motor vehicle is impaired by the consumption of alcohol.'' Evidence that a person registered a BAC of more than 0.05 but not more than 0.07 is considered relevant evidence, but is not given *prima facie* effect, in determining whether the person's ability to operate a motor vehicle was impaired. Evidence that a person registered a BAC of more than 0.07 but less than 0.10 is considered *prima facie* evidence that the person's ability to operate a motor vehicle was impaired. Operating at these BAC levels, however, is not a *per se* offense.

Under the agencies' regulation, New York does not presently qualify for Section 163 funding based on its ''driving while intoxicated'' law, because a person does not violate the law unless their BAC is 0.10 or greater. The State's ''driving while ability impaired'' law does not enable the State to qualify for two reasons. First, it is not a *per se* law, and second, it is not the ''standard'' driving while intoxicated offense in the State. To qualify for Section 163 funding, the State would be required to amend its ''driving while intoxicated'' law to cover persons operating a motor vehicle with a BAC of 0.08.

The ''standard'' driving while intoxicated offense, however, will not necessarily be the most serious drinking and driving offense in the State. The agencies recognize, for example, that some States have enacted additional illegal *per se* offenses that apply additional or enhanced sanctions to offenders with ''high BAC's'' (in excess of 0.10, such as at 0.17 or 0.20). In fact, NHTSA's Section 410 program (23 U.S.C. Section 410, as amended by TEA 21), encourages States to enact such laws. These ''high BAC'' laws will not be considered the ''standard'' driving while intoxicated offense of a State for the purpose of the Section 163 program.

In States with multiple drinking and driving provisions, the agency will consider a number of factors to determine whether the State's 0.08 BAC *per se* law has been deemed to be or is equivalent to the standard driving while intoxicated offense in the State. These factors will include the treatment of these offenses, their relation to other offenses in the State and the sanctions and other consequences that result when persons violate these offenses.

Terms Governing the Incentive Grant Funds

A total of $500 million has been authorized for the section 163 program over a period of six years, beginning in FY 1998. Specifically, TEA 21 authorized $55 million for fiscal year 1998, $65 million for FY 99, $80 million for FY 2000, $90 million for FY 2001, $100 million for FY 2002 and $110 million for FY 2003.

Available funds will be apportioned in each fiscal year to the States that qualify for grants, according to the section 402 formula, which is apportioned 75 percent based on the State's population and 25 percent based on the number of public road miles in the State.

Funds received by States under the section 163 program may be used for any project eligible for assistance under Title 23 of the United States Code, which includes highway construction as well as highway safety projects or programs. Since States will be receiving section 163 funds on the basis on their 0.08 BAC *per se* laws, a highway safety initiative, the agencies strongly encourage the States to consider eligible highway safety projects and programs when they are deciding how they will spend these funds.

Since section 163 provides that the Federal share of the cost of a project funded under this program shall be 100 percent, there is no State matching requirement for these funds. In addition, the funds authorized by section 163 shall remain available until expended.

Demonstrating Compliance

Section 163 provides that grants will be awarded to complying States beginning in fiscal year 1998. To demonstrate compliance with the provisions of both the statutory and regulatory requirements, each State must submit a certification in each year that it wishes to receive a grant.

To receive its first grant under this program, a State must submit a certification by an appropriate State official that the State has enacted and is enforcing a 0.08 BAC *per se* law that conforms to 23 U.S.C. § 163 and § 1225.5 of this Part and that the funds received by the State under this program will be used for projects eligible for assistance under Title 23 of the United States Code, which include highway construction as well as highway safety projects and programs.

To receive subsequent-year grants under this program, a State must submit a certification by an appropriate State official, stating either that the State has amended or has not changed its 0.08 BAC *per se* law and that the State is enforcing the law. The certification must also state that the funds received by the State under this program will be used for projects eligible for assistance under Title 23 of the United States Code, which include highway construction as well as highway safety projects and programs.

First and subsequent-year certifications must include citations to the State's conforming 0.08 BAC *per se* law. These citations must include all applicable provisions of the State's criminal code and, if the State has an ALR law, all applicable provisions of that law, as well.

To be eligible for grant funds in FY 1998, States must submit their certifications no later than September 4, 1998.

To be eligible for grant funds in a subsequent fiscal year, States must submit their certifications no later than July 1 of that fiscal year. For example, to be eligible for grant funds in FY 1999, States must submit their certifications no later than July 1, 1999.

The agencies strongly encourage States to submit their certifications in advance of the regulatory deadlines. The agencies also strongly encourage States that are considering 0.08 BAC *per se* legislation to request preliminary reviews of such legislation from the agencies while the legislation is still pending. The agencies would determine in these preliminary reviews whether the legislation, if enacted, would conform to the new Federal requirements, thereby avoiding a situation in which a State unintentionally enacts non-conforming 0.08 BAC legislation and then is unable to qualify for grant funds. Requests should be submitted through NHTSA's Regional Administrators, who will refer the requests to appropriate NHTSA and FHWA offices for review.

Interim Final Rule

This document is published as an interim final rule. Accordingly, the new regulations in Part 1225 are fully in effect upon the date of the document's publication. No further regulatory action by the agencies is necessary to make these regulations effective.

These regulations have been published as an interim final rule because insufficient time was available to provide for prior notice and opportunity for comment. TEA 21 was signed into law on June 9, 1998. The Act

authorizes that grant funds be apportioned and obligated, beginning in fiscal year 1998, which ends on September 30, 1998. To ensure the award in FY 98 of these grant funds to eligible States, a number of steps must be taken in a period of less than 90 days. The agencies had to promulgate and make effective regulations, States must apply for the funds, the agencies must process those applications and apportion the incentive grant funds and the States must obligate the funds. These circumstances make it necessary to implement the statutory requirements by an interim final rule, rather than by the slower process of notice and comment rulemaking.

In the agencies' view, the States will not be impeded by the use of an interim final rule. The procedures that States must follow to apply for grant funds under this new program are similar to procedures that States have followed in other grant programs administered by NHTSA and/or the FHWA. These procedures were established by rulemaking and were subject to prior notice and the opportunity for comment.

Moreover, the criteria that States must meet to qualify for these funds are derived from the Federal statute and are similar to the criteria that the agencies established in their rulemaking action that implemented 23 U.S.C. Section 161, which established the zero tolerance requirement, under which persons under the age of 21 who operate a vehicle at a BAC of 0.02 or greater are deemed to be driving while intoxicated. The agencies' zero tolerance regulations were subject to prior notice and the opportunity for comment.

For these reasons, the agencies believe that there is good cause for finding that providing notice and comment in connection with this rulemaking action is impracticable, unnecessary, and contrary to the public interest. The agencies also find, for these reasons, that notice and an opportunity for comment are not required under the Department's regulatory policies and procedures and that this rule can be made effective upon publication, pursuant to 5 U.S.C. 808 (P.L. 104–121) (the Congressional review provisions of the Small Business Regulatory Enforcement Fairness Act).

The agencies request written comments on these new regulations. All comments submitted in response to this document will be considered by the agencies. Following the close of the comment period, the agencies will publish a document in the **Federal Register** responding to the comments and, if appropriate, will make revisions to the provisions of Part 1225.

Written Comments

Interested persons are invited to comment on this interim final rule. It is requested, but not required, that two copies be submitted.

All comments must be limited to 15 pages in length. Necessary attachments may be appended to those submissions without regard to the 15 page limit. (49 CFR 553.21.) This limitation is intended to encourage commenters to detail their primary arguments in a concise fashion.

Written comments to the public docket must be received by November 2, 1998. To expedite the submission of comments, simultaneous with the issuance of this notice, NHTSA and FHWA will mail copies to all Governors' Representatives for Highway Safety and State Departments of Transportation.

All comments received before the close of business on the comment closing date will be considered and will be available for examination in the docket at the above address before and after that date. To the extent possible, comments filed after the closing date will also be considered. However, the rulemaking action may proceed at any time after that date. The agencies will continue to file relevant material in the docket as it becomes available after the closing date, and it is recommended that interested persons continue to examine the docket for new material.

Those persons who wish to be notified upon receipt of their comments in the docket should enclose, in the envelope with their comments, a self-addressed stamped postcard. Upon receiving the comments, the docket supervisor will return the postcard by mail.

Copies of all comments will be placed in Docket 98–4394 in Docket Management, Room PL–401, Nassif Building, 400 Seventh Street, S.W., Washington, D.C. 20590.

Regulatory Analyses and Notices

Executive Order 12778 (Civil Justice Reform)

This interim final rule will not have any preemptive or retroactive effect. The enabling legislation does not establish a procedure for judicial review of final rules promulgated under its provisions. There is no requirement that individuals submit a petition for reconsideration or other administrative proceedings before they may file suit in court.

Executive Order 12866 (Regulatory Planning and Review) and DOT Regulatory Policies and Procedures

The agencies have determined that this action is a significant regulatory action within the meaning of Executive Order 12866 and is significant within the meaning of Department of Transportation Regulatory Policies and Procedures. This determination is based on a finding that the rule is likely to have an annual effect on the economy of $100 million or more in FY's 2002 and 2003. A sum of $100 million is authorized for this program in FY 2002 and $110 million is authorized in FY 2003. It is likely that these sums will be awarded to qualifying States under the section 163 program in those fiscal years. Accordingly, an economic assessment has been prepared.

The economic assessment concludes that the costs to the States of obtaining the funding under the Section 163 program, which include the administrative costs of submitting a copy of the law and a certification that the State is enforcing the law, are minimal. In addition, it finds that the costs to States to enact and publicize new 0.08 BAC per se laws will not be significant, and the costs to enforce these laws need not be different than those incurred by States to enforce their current impaired driving laws.

However, the economic assessment notes that it is expected that at least some States will increase enforcement efforts when their new laws become effective, and arrests and prosecutions are likely to increase for drivers with a BAC at 0.08 and above. Since many States have self-sufficient programs supported by fines for the post-conviction phase of their programs, the economic assessment concludes that any additional activity during this phase of their programs, will not result in additional costs to the States.

While it is difficult to isolate the effects that a national 0.08 BAC *per se* standard would have, the economic assessment indicates that a study conducted by the Boston University School of Public Health, which was published in the September 1996 issue of the American Journal of Public Health estimated that 500–600 alcohol-related highway deaths would be prevented each year if all States lowered their BAC limits to 0.08 BAC. Such a reduction in deaths would represent a 4 percent decrease in alcohol-related deaths nationwide and would result in cost savings of approximately $1.5 billion each year. Copies of the economic assessment are available to

the public in the docket for this rulemaking action.

Regulatory Flexibility Act

In compliance with the Regulatory Flexibility Act (Pub. L. 96–354, 5 U.S.C. 601–612), the agencies have evaluated the effects of this action on small entities. Studies to date have not shown that 0.08 BAC *per se* laws have affected alcohol consumption in any of the five States analyzed. Thus, there should be no noticeable impact on small businesses that sell and serve alcohol. Since this interim final rule will apparently affect only State governments, it will not have any effect on small businesses. Thus, we certify that this action will not have a significant impact on a substantial number of small entities and find that the preparation of a Regulatory Flexibility Analysis is unnecessary.

Paperwork Reduction Act

This action does not contain a collection of information requirement for purposes of the Paperwork Reduction Act of 1980, 44 U.S.C. Chapter 35, as implemented by the Office of Management and Budget (OMB) in 5 CFR Part 1320.

National Environmental Policy Act

The agencies have analyzed this action for the purpose of the National Environmental Policy Act of 1969 (42 U.S.C. 4321 *et seq.*) and have determined that it will not have any significant impact on the quality of the human environment.

The Unfunded Mandates Reform Act

The Unfunded Mandates Reform Act of 1995 (Public Law 104–4) requires agencies to prepare a written assessment of the costs, benefits and other affects of final rules that include a Federal mandate likely to result in the expenditure by State, local or tribal governments, in the aggregate, or by the private sector, of more than $100 million annually. This interim final rule does not meet the definition of a Federal mandate. It is a voluntary program in which States can choose to participate, solely at their option. The costs to States to qualify for participation in this program are minimal, and will result in annual expenditures that will not exceed the $100 million threshold. Moreover, States that chose to participate in this program will receive Federal incentive grants, which will provide funds for activities that are eligible under Title 23 of the United States Code.

Executive Order 12612 (Federalism Assessment)

This action has been analyzed in accordance with the principles and criteria contained in Executive Order 12612, and it has been determined that this action does not have sufficient federalism implications to warrant the preparation of a federalism assessment. Accordingly, the preparation of a Federalism Assessment is not warranted.

List of Subjects in 23 CFR Part 1225

Alcohol and alcoholic beverages, Grant programs, Transportation, Highway safety.

In accordance with the foregoing, a new Part 1225 is added to chapter II of Title 23 of the Code of Federal Regulations to read as follows:

PART 1225—OPERATION OF MOTOR VEHICLES BY INTOXICATED PERSONS

Sec.

1225.1 Scope.
1225.2 Purpose.
1225.3 Definitions.
1225.4 General requirements.
1225.5 Adoption of 0.08 BAC *per se* law.
1225.6 Award procedures.

Authority: 23 U.S.C. 163; delegation of authority at 49 CFR 1.48 and 1.50.

§ 1225.1 Scope.

This part prescribes the requirements necessary to implement Section 163 of Title 23, United States Code, which encourages States to enact and enforce 0.08 BAC *per se* laws.

§ 1225.2 Purpose.

The purpose of this part is to specify the steps that States must take to qualify for incentive grant funds in accordance with 23 U.S.C. 163, and to encourage States to enact and enforce 0.08 BAC *per se* laws.

§ 1225.3 Definitions.

As used in this part:

(a) *BAC* means either blood or breath alcohol concentration.

(b) *BAC per se law* means a law that makes it an offense, in and of itself, to operate a motor vehicle with an alcohol concentration at or above a specified level.

(c) *Alcohol concentration* means either grams of alcohol per 100 milliliters of blood or grams of alcohol per 210 liters of breath.

(d) *Has enacted and is enforcing* means the State's law is in effect and the State has begun to implement the law.

(e) *Operating a motor vehicle* means driving or being in actual physical control of a motor vehicle.

(f) *Standard driving while intoxicated offense* means the non-BAC *per se* driving while intoxicated offense in the State.

(g) *State* means any one of the fifty States, the District of Columbia, or Puerto Rico.

§ 1225.4 General requirements.

(a) Qualification requirements.

(1) To qualify for a first-year grant under 23 U.S.C. 163, a State must submit a certification by an appropriate State official, that the State has enacted and is enforcing a 0.08 BAC *per se* law that conforms to 23 U.S.C. 163 and § 1225.5 of this part and that the funds will be used for eligible projects and programs. The certification shall be worded as follows:

(Name of certifying official), (position title), of the (State or Commonwealth) of _____, do hereby certify that the (State or Commonwealth) of _____ has enacted and is enforcing a 0.08 BAC *per se* law that conforms to 23 U.S.C. 163 and 23 CFR 1225.5, (citations to State law), and that the funds received by the (State or Commonwealth) of _____ under 23 U.S.C. 163 will be used for projects eligible for assistance under Title 23 of the United States Code, which include highway construction as well as highway safety projects and programs.

(2) To qualify for a subsequent-year grant under 23 U.S.C. 163, a State must submit a certification by an appropriate State official.

(i) If the State's 0.08 BAC *per se* law has not changed since the State last qualified for grant funds under this program, the certification shall be worded as follows:

(Name of certifying official), (position title), of the (State or Commonwealth) of _____, do hereby certify that the (State or Commonwealth) of _____ has not changed and is enforcing a 0.08 BAC *per se* law, which conforms to 23 U.S.C. 163 and 23 CFR 1225.5, (citations to State law), and that the funds received by the (State or Commonwealth) of _____ under 23 U.S.C. 163 will be used for projects eligible for assistance under Title 23 of the United States Code, which include highway construction as well as highway safety projects and programs.

(ii) If the State's 0.08 BAC *per se* law has changed since the State last qualified for grant funds under this program, the certification shall be worded as follows:

(Name of certifying official), (position title), of the (State or Commonwealth) of _____, do hereby certify that the (State or Commonwealth) of _____ has amended and is enforcing a 0.08 BAC *per se* law that conforms to 23 U.S.C. 163 and 23 CFR 1225.5, (citations to State law), and that the funds received by the (State or

Commonwealth) of _____, under 23 U.S.C. 163 will be used for projects eligible for assistance under Title 23 of the United States Code, which include highway construction as well as highway safety projects and programs.

(3) An original and four copies of the certification shall be submitted to the appropriate NHTSA Regional Administrator. Each Regional Administrator will forward the certifications it receives to appropriate NHTSA and FHWA offices.

(4) Each State that submits a certification will be informed by the agencies whether or not it qualifies for funds.

(5) To qualify for FY 1998 grant funds, certifications must be received by the agencies not later than September 4, 1998.

(6) To qualify for grant funds in a subsequent fiscal year, certifications must be received by the agencies not later than July 1 of that fiscal year.

(b) Limitation on grants. A State may receive grant funds, subject to the following limitations:

(1) The amount of a grant apportioned to a State under § 1225.5 of this part shall be determined by multiplying:

(i) The amount authorized to carry out section 163 of 23 U.S.C. for the fiscal year; by

(ii) The ratio that the amount of funds apportioned to each such State under section 402 for such fiscal year bears to the total amount of funds apportioned to all such States under section 402 for such fiscal year.

(2) A State may obligate grant funds apportioned under this part for any project eligible for assistance under Title 23 of the United States Code.

(3) The Federal share of the cost of a project funded with grant funds awarded under this part shall be 100 percent.

§ 1225.5 Adoption of 0.08 BAC per se law.

To qualify for an incentive grant under this part, a State must demonstrate that it has enacted and is enforcing a law that provides that any person with a blood alcohol concentration (BAC) of 0.08 percent or greater while operating a motor vehicle in the State shall be deemed to have committed a *per se* offense of driving while intoxicated or an equivalent *per se* offense. The law must:

(a) Apply to all persons;

(b) Set a blood alcohol concentration of not higher than 0.08 percent as the legal limit;

(c) Make operating a motor vehicle by an individual at or above the legal limit a *per se* offense;

(d) Provide for primary enforcement;

(e) Apply the 0.08 BAC legal limit to the State's criminal code and, if the State has an administrative license suspension or revocation (ALR) law, to its ALR law; and

(f) Be deemed to be or be equivalent to the standard driving while intoxicated offense in the State.

§ 1225.6 Award procedures.

In each Federal fiscal year, grant funds will be apportioned to eligible States upon submission and approval of the documentation required by § 1225.4(a) and subject to the limitations in § 1225.4(b). The obligation authority associated with these funds are subject to the limitation on obligation pursuant to section 1102 of TEA 21.

Issued on: August 31, 1998.

Gloria J. Jeff,

Deputy Administrator, Federal Highway Administration.

Ricardo Martinez,

Administrator, National Highway Traffic Safety Administration.

[FR Doc. 98–23748 Filed 8–31–98; 12:26 pm]

BILLING CODE 4910–59–P

DEPARTMENT OF LABOR

Office of Labor-Management Standards

29 CFR Parts 406, 408

RIN 1215–AB22

Technical Amendments of Rules Relating to Labor-Management Standards and Standards of Conduct for Federal Sector Labor Organizations; Correction

AGENCY: Office of Labor-Management Standards, Employment Standards Administration, Labor.

ACTION: Final Rule; correction.

SUMMARY: This document contains corrections to the final rule published on June 19, 1998 (63 FR 33778). That rule, which made a number of technical amendments to the Department of Labor's regulations at Chapter IV of title 29 of the Code of Federal Regulations, inadvertently omitted two necessary amendments.

EFFECTIVE DATE: September 3, 1998.

FOR FURTHER INFORMATION CONTACT: Kay H. Oshel, Chief, Division of Interpretations and Standards, Office of Labor-Management Standards, Employment Standards Administration, U.S. Department of Labor, Room N–5605, Washington, D.C. 20210, (202) 219–7373 (this is not a toll-free number).

SUPPLEMENTARY INFORMATION:

Background

The final rule that is the subject of this correction made a number of technical corrections and amendments to the regulations implementing the Labor-Management Reporting and Disclosure Act of 1959, as amended (LMRDA) and the standards of conduct for federal sector labor organizations. Several of these amendments relate to new control numbers assigned by the Office of Management and Budget (OMB) approving the reporting forms required by the LMRDA and the standards of conduct regulations. New numbers were assigned because of a reorganization in the Department of Labor pursuant to Secretary's Order No. 5–96, (February 10, 1997, 62 FR 107). However, the final rule inadvertently omitted amendments to two provisions in which the old control numbers appear.

Need for Correction

As published, the final rule contains errors which are in need of correction.

Publication in Final

The undersigned has determined that this rulemaking need not be published as a proposed rule, as generally required by the Administrative Procedure Act (APA), 5 U.S.C. 553. The portion of this rulemaking that reflects agency organization, procedure, and practice is exempt under section 553(b)(A) of the APA. For the portion of this rulemaking that makes technical amendments and corrections, there is good cause for finding that notice and public procedure is unnecessary and contrary to the public interest, pursuant to section 553(b)(B) of the APA.

Effective Date

The undersigned has determined that good cause exists for waiving the customary requirement for delay in the effective date of a final rule for 30 days following its publication since this rule is technical and nonsubstantive, merely reflects agency organization, practice, and procedure, and makes amendments required by statute and technical amendments and corrections. Therefore, these amendments shall be effective upon publication. See 5 U.S.C. 553(d).

Administrative Requirements

A. Executive Order 12866

The Department of Labor has determined that this rule is not a significant regulatory action as defined in section 3(f) of Executive Order 12866 in that it will not (1) have an annual effect on the economy of $100 million

or more, or adversely affect in a material way the economy, a sector of the economy, productivity, competition, jobs, the environment, public health or safety, or State, local, or tribal governments or communities, (2) create a serious inconsistency or otherwise interfere with an action taken or planned by another agency, (3) materially alter the budgetary impact of entitlements, grants, user fees, or loan programs or the rights and obligations of recipients thereof, or (4) raise novel legal or policy issues arising out of legal mandates, the President's priorities, or the principles set forth in Executive Order 12866.

B. Regulatory Flexibility Act

Because a notice of proposed rulemaking is not required for this rule under 5 U.S.C. 553(b), the requirements of the Regulatory Flexibility Act, 5 U.S.C. 601 *et seq.*, pertaining to regulatory flexibility analysis do not apply. See 5 U.S.C. 601(2). Therefore, a regulatory flexibility analysis is not required.

C. Paperwork Reduction Act

This rule contains no additional information collection requirements. The information collection requirements in the regulations to which this rule makes technical amendments have been approved by the Office of Management and Budget (OMB control number 1215–0188).

D. Small Business Regulatory Enforcement Fairness Act

The Department has determined that this final rule is not a ''major rule'' requiring prior approval by the Congress and the President pursuant to the Small Business Regulatory Enforcement Fairness Act of 1996 (5 U.S.C. 804), because it is not likely to result in (1) an annual effect on the economy of $100 million or more, (2) a major increase in costs or prices for consumers, individual industries, Federal, State, or local government agencies, or geographic regions, or (3) significant adverse effects on competition, employment, investment, productivity, innovation, or the ability of United States-based enterprises to compete with foreign-based enterprises in domestic and export markets.

Further, since the Department has determined, for good cause, that publication of a proposed rule and solicitation of comments on this rule is not necessary, under 5 U.S.C. 808(2), this final rule is effective immediately upon publication as stated previously in this notice.

E. Unfunded Mandates Reform Act

For purposes of Section 2 of the Unfunded Mandates Reform Act of 1995, 2 U.S.C. 1532, as well as Executive Order 12875 (58 FR 58093, October 28, 1993), this rule does not include any federal mandate that may result in increased expenditures by State, local and tribal governments, or increased expenditures by the private sector of more than $100 million.

List of Subjects

29 CFR Part 406

Labor management relations, Reporting and recordkeeping requirements.

29 CFR Part 408

Labor unions, Reporting and recordkeeping requirements.

Adoption of Amendments of Regulations

In consideration of the foregoing, the Office of Labor-Management Standards, Employment Standards Administration, Department of Labor hereby amends Parts 406 and 408 of title 29 of the Code of Federal Regulations as set forth below.

PART 406—REPORTING BY LABOR RELATIONS CONSULTANTS AND OTHER PERSONS, CERTAIN AGREEMENTS WITH EMPLOYERS

1. The authority citation for part 406 continues to read as follows:

Authority: Secs. 203, 207, 208, 73 Stat. 526, 529 (29 U.S.C. 433, 437, 438); Secretary's Order No. 5–96 (62 FR 107, January 2, 1997).

§ 406.10 [Corrected]

2. Section 406.10 is corrected by changing the OMB control number at the end of the section to ''1215–0188.''

PART 408—LABOR ORGANIZATION TRUSTEESHIP REPORTS

3. The authority citation for part 408 continues to read as follows:

Authority: Secs. 201, 207, 208, 301, 73 Stat. 524, 529, 530 (29 U.S.C. 431, 437, 438, 461); Secretary's Order No. 5–96 (62 FR 107, January 2, 1997).

§ 408.13 [Corrected]

4. Section 408.13 is amended by changing the OMB control number at the end of the section to ''1215–0188.''

Signed in Washington, D.C. this 24th day of August, 1998.

Bernard E. Anderson,

Assistant Secretary for Employment Standards.

[FR Doc. 98–23826 Filed 9–2–98; 8:45 am]

BILLING CODE 4510–86–P

DEPARTMENT OF TRANSPORTATION

Coast Guard

33 CFR Part 165

[CGD01–98–130]

RIN 2115–AA97

Safety Zone: Gloucester Schooner Festival Fireworks Display, Gloucester Harbor, Gloucester, MA

AGENCY: Coast Guard, DOT.

ACTION: Temporary final rule.

SUMMARY: The Coast Guard is establishing a temporary safety zone for the Gloucester Schooner Festival Fireworks Display around Stage Fort Park in Gloucester Harbor, Gloucester, MA. The safety zone is in effect from 8 p.m. until 10:30 p.m. on September 5, 1998. The safety zone temporarily closes all waters within four hundred (400) yards of the easternmost tip of Stage Head at Stage Head Fort Park in Gloucester Harbor, Gloucester, MA. The safety zone is needed to protect vessels from the hazards posed by a fireworks display.

EFFECTIVE DATE: This rule is effective from 8 p.m. until 10:30 p.m. on Saturday, September 5, 1998.

FOR FURTHER INFORMATION CONTACT: LT Dennis O'Mara, Waterways Management Division, Coast Guard Marine Safety Office Boston, (617) 223–3000.

SUPPLEMENTARY INFORMATION:

Regulatory History

Pursuant to 5 U.S.C. 553, a notice of proposed rulemaking (NPRM) was not published for this regulation, and good cause exists for making it effective in less than 30 days after **Federal Register** publication. Publishing a NPRM and delaying its effective date would be contrary to the public interest since immediate action is needed to close a portion of the waterway and protect the maritime public from the hazards associated with this fireworks display, which is intended for public entertainment.

Background and Purpose

On August 11, 1998 the Gloucester Fireworks Fund filed a marine event

permit with the Coast Guard to hold a fireworks program on the waters of Gloucester Harbor, Gloucester, MA. This regulation establishes a safety zone in all waters within four hundred (400) yards of the easternmost tip of Stage Head at Stage Fort Park in Gloucester Harbor, Gloucester, MA. This safety zone is in effect from 8 p.m. to 10:30 p.m. on September 5, 1998. This safety zone prevents entry into or movement within this portion of Gloucester Harbor, and it is needed to protect the boating public viewing this display from the dangers posed by the fireworks display.

Regulatory Evaluation

This rule is not a significant regulatory action under section 3(f) of Executive Order 12866 and does not require an assessment of potential costs and benefits under section 6(a)(3) of that order. It has not been reviewed by the Office of Management and Budget under that order. It is not significant under the regulatory policies and procedures of the Department of Transportation (DOT) (44 FR 11040; February 26, 1979). The Coast Guard expects the economic impact of this rule to be so minimal that a full Regulatory Evaluation under paragraph 10e of the regulatory policies and procedures of DOT is unnecessary. Deep draft vessel traffic, fishing vessels and tour boats may experience minor delays in departures or arrivals due to the safety zone. Costs to the shipping industry from these regulations, if any, are expected to be minor and have no significant adverse financial effect on vessel operators. In addition, due to the limited number and duration of the arrivals, departures and harbor transits, the Coast Guard expects the economic impact of this regulation to be so minimal that a Regulatory Evaluation is unnecessary.

Small Entities

Under the Regulatory Flexibility Act (5 U.S.C. 601 *et seq.*), the Coast Guard considered whether this rule would have a significant economic impact on a substantial number of small entities. ''Small entities'' may include (1) small businesses and not-for-profit organizations that are independently owned and operated and are not dominant in their fields and (2) governmental jurisdictions with populations of less than 50,000.

For the reasons discussed on the Regulatory Evaluation section above, the Coast Guard certifies under section 605(b) of the Regulatory Flexibility Act (5 U.S.C. 601 *et seq.*) that this rule will not have a significant impact on a substantial number of small entities.

Collection of Information

This proposal contains no collection of information requirements under the Paperwork Reduction Act (44 U.S.C. 3501 *et seq.*).

Federalism

The Coast Guard has analyzed this rule under the principles and criteria contained in Executive Order 12612, and has determined that this rule does not have sufficient federalism implications to warrant the preparation of a Federalism Assessment.

Environment

The Coast Guard has considered the environmental impact of this final rule and concluded that, under Figure 2–1, paragraph 34(g), of Commandant Instruction M16475.1C, this final rule is categorically excluded from further environmental documentation. A ''Categorical Exclusion Determination'' is available in the docket for inspection or copying where indicated under **ADDRESSES.**

List of Subjects in 33 CFR Part 165

Harbors, Marine safety, Navigation (water), Reporting and recordkeeping requirements, Security measures, Waterways.

Regulation

For reasons set out in the preamble, the Coast Guard amends 33 CFR Part 165 as follows:

1. The authority citation for part 165 continues to read as follows:

Authority: 33 U.S.C. 1231; 50 U.S.C. 191; 33 CFR 1.05–1(g), 6.04–1, 6.04–6, and 160.5; 49 CFR 1.46.

2. Add temporary § 165.T01–130 to read as follows:

§ 165.T01–130 Safety Zone: Gloucester Schooner Festival Fireworks Display, Gloucester Harbor, Gloucester, MA.

(a) *Location.* The following area is a safety zone: All waters of Gloucester Harbor within four hundred (400 yards of the easternmost tip of Stage Head at Stage Fort Park in Gloucester Harbor, Gloucester, MA.

(b) *Effective Date.* This section is effective from 8 p.m. until 10:30 p.m. on Saturday September 5, 1998.

(c) *Regulations.*

(1) In accordance with the general regulations in § 165.23 of this part, entry into or movement within this zone is prohibited unless authorized by the Captain of the Port, Boston.

(2) All persons and vessels shall comply with the instructions of the Captain of the Port or the designated on-scene U.S. Coast Guard patrol personnel. U.S. Coast Guard patrol personnel include commissioned, warrant, and petty officers of the U.S. Coast Guard.

(3) The general regulations covering safety zones in section 165.23 of this part apply.

Dated: August 21, 1998.

J.L. Grenier,

Captain, U.S. Coast Guard, Captain of the Port, Boston, Massachusetts.

[FR Doc. 98–23700 Filed 9–2–98; 8:45 am]

BILLING CODE 4910–15–M

DEPARTMENT OF TRANSPORTATION

Coast Guard

33 CFR Part 165

[CGD11–97–010]

Regulated Navigation Area: Copper Canyon, Lake Havasu, Colorado River; Correction

AGENCY: Coast Guard, DOT.

ACTION: Final rule; correction.

SUMMARY: This document contains a correction to the final rule (CGD11–97–010) which was published on page 38307 of the Thursday, July 16, 1998 issue of the **Federal Register**. The rule established a regulated navigation area intended to improve access for emergency response officials. The new section to be added was incorrectly designated as § 165.1115. The correct section number designation for this rule is § 165.1116. This document corrects that error by designating a different section number to the final rule.

DATES: This correction is effective on September 3, 1998.

ADDRESSES: Documents pertaining to this rulemaking are available for inspection and copying at Coast Guard Marine Safety Office, 2716 North Harbor Drive, San Diego, CA 92101–1064.

FOR FURTHER INFORMATION CONTACT: Petty Officer Greg Nelson, U.S. Coast Guard Marine Safety Office; telephone number (619) 683–6492.

Correction

In the final rule FR Doc. 98–18948 (CGD11–97–010), published July 16, 1998, in the second column of page 38308, in amendatory instruction 2, and in the heading to the regulatory text, correct ''§ 165.1115'' to read ''§ 165.1116.''

Dated: August 20, 1998.

R.D. Sirois,

Captain, U.S. Coast Guard, Commander, Eleventh Coast Guard District, Acting.

[FR Doc. 98–23699 Filed 9–2–98; 8:45 am]

BILLING CODE 4910–15–M

DEPARTMENT OF TRANSPORTATION

Coast Guard

33 CFR Part 165

[CGD01–98–131]

RIN 2115–AA97

Safety Zone; Toward a Better Life Fireworks Display, Dorchester Bay, Boston, MA

AGENCY: Coast Guard, DOT.

ACTION: Temporary final rule.

SUMMARY: The Coast Guard is establishing a temporary safety zone for the Toward a Better Life Fireworks Display off Columbia Point in Dorchester Bay, Boston, MA. The safety zone is in effect from 7 p.m. until 11 p.m. on Sunday September 6, 1998. The safety zone temporarily closes all waters of Dorchester Bay within four hundred (400) yards of the fireworks barge moored in approximate position 42°18′58″ N, 071°01′43″ W (NAD 1983). The safety zone is needed to prevent vessels from the hazards posed by a fireworks display.

EFFECTIVE DATE: This rule is effective from 7 p.m. until 11 p.m. on Sunday, September 6, 1998.

FOR FURTHER INFORMATION CONTACT: LT Dennis O'Mara, Waterways Management Division, Coast Guard Marine Safety Office Boston, (617) 223–3000.

SUPPLEMENTARY INFORMATION: .

Regulatory History

Pursuant to 5 U.S.C. 553, a notice of proposed rulemaking (NPRM) was not published for this regulation, and good cause exists for making it effective in less than 30 days after **Federal Register** publication. Any delay encountered in this regulation's effective date would be contrary to the public interest since immediate action is needed to close a portion of the Waterway and protect the maritime public from the hazards associated with this fireworks display, which is intended for public entertainment.

Background and Purpose

On August 11, 1998 the Secretary of State, Commonwealth of Massachusetts filed a marine event permit with the Coast Guard to hold a fireworks program on the waters of Dorchester Bay, Boston, MA. This regulation establishes a safety zone in all waters of Dorchester Bay within a four hundred (400) yard radius of the fireworks barge moored in approximate position 42°18′58″ N, 071°01′43″ W (NAD 1983). The safety zone is in effect from 7 p.m. until 11 p.m. on Sunday, September 6, 1998. The safety zone prevents entry into or movement within this portion of Dorchester Bay, and it is needed to protect the boating public viewing this display from the dangers posed by the fireworks display.

Regulatory Evaluation

This Final rule is not a significant regulatory action under section 3(f) of Executive Order 12866 and does not require an assessment of potential costs and benefits under section 6(a)(3) of that order. It has not been reviewed by the Office of Management and Budget under that order. It is not significant under the regulatory policies and procedures of the Department of Transportation (DOT) (44 FR 11040; February 26, 1979). The Coast Guard expects the economic impact of this rule to be so minimal that a full Regulatory Evaluation under paragraph 10e of the regulatory policies and procedures of DOT is unnecessary. Deep draft vessel traffic, fishing vessels and tour boats may experience minor delays in departures or arrivals due to the safety zone. Costs to the shipping industry from these regulations, if any are expected to be minor and have no significant adverse financial effect on vessel operators. In addition, due to the limited number and duration of the arrivals, departures and harbor transits, the Coast Guard expects the economic impact of this regulation to be so minimal that a Regulatory Evaluation is unnecessary.

Small Entities

Under the Regulatory Flexibility Act (5 U.S.C. 601 *et seq.*), the Coast Guard considered whether this rule would have a significant economic impact on a substantial number of small entities. ''Small entities'' may include (1) small businesses and not-for-profit organizations that are independently owned and operated and are not dominant in their fields and (2) governmental jurisdictions with populations of less than 50,000.

For the reasons discussed in the Regulatory Evaluation above, the Coast Guard certifies under section 605(b) of the Regulatory Flexibility Act (5 U.S.C. 601 *et seq.*), that this rule will not have a significant impact on a substantial number of small entities.

Collection of Information

This proposal contains no collection of information requirements under the Paperwork Reduction Act (44 U.S.C. 3501 *et seq.*).

Federalism

The Coast Guard has analyzed this rule under the principles and criteria contained in Executive Order 12612, and has determined that this rule does not have sufficient federalism implications to warrant the preparation of a Federalism Assessment.

Environment

The Coast Guard has considered the environmental impact of this final rule and concluded that, under Figure 2–1, paragraph 34(g), of Commandant Instruction M16475.1C, this final rule is categorically excluded from further environmental documentation. A ''Categorical Exclusion Determination'' is available in the docket for inspection or copying where indicated under **ADDRESSES.**

List of Subjects in 33 CFR Part 165

Harbors, Marine Safety, Navigation (water), Reporting and recordkeeping requirements, Security measures, Waterways.

Regulation

For reasons set out in the preamble, the Coast Guard proposes to amend 33 CFR Part 165 as follows:

1. The authority citation for part 165 continues to read as follows:

Authority: 33 U.S.C. 1231; 50 U.S.C. 191; 33 CFR 1.05–1(g), 6.04–1, 6.04–6, and 160.5; 49 CFR 1.46.

2. Add temporary § 165.T01–131 to read as follows:

§ 165.T01–131 Safety Zone: Toward a Better Life Fireworks Display, Dorchester Bay, Boston, MA.

(a) *Location.* The following area is a safety zone: All waters of Dorchester Bay within four hundred (400) yards of the fireworks barge moored in approximate position 42°18′58″ N, 071°01′43″ W (NAD 1983).

(b) *Effective Date.* This section is effective from 7 p.m. until 11 p.m. on Sunday September 6, 1998.

(c) *Regulations.*

(1) In accordance with the general regulations in section 165.23 of this part, entry into or movement within this zone is prohibited unless authorized by the Captain of the Port, Boston.

(2) All persons and vessels shall comply with the instructions of the Captain of the Port or the designated on-scene U.S.Coast Guard patrol personnel. U.S. Coast Guard patrol personnel include commissioned, warrant, and petty officers of the U.S. Coast Guard.

(3) The general regulations covering safety zones in section 165.23 of this part apply.

Dated: August 21, 1998.

J.L. Grenier,

Captain, U.S. Coast Guard, Captain of the Port, Boston, Massachusetts.

[FR Doc. 98–23698 Filed 9–2–98; 8:45 am]

BILLING CODE 4910–15–M

DEPARTMENT OF TRANSPORTATION

Coast Guard

33 CFR Part 165

[COTP New Orleans, LA Regulation 98–019]

RIN 2115–AA97

Safety Zone; Baptiste Collette Bayou From Lower Mississippi River Mile 11.3 to Lighted Buoy #21 in Breton Sound

AGENCY: Coast Guard, DOT.

ACTION: Temporary final rule.

SUMMARY: The Coast Guard is establishing a temporary safety zone from the entrance to Baptiste Collette Bayou at Lower Mississippi River Mile 11.3 to Baptiste Collette Lighted Buoy #21 in Breton Sound, extending the entire width of the bayou. The safety zone has been established to ensure the safe transit of vessels in Baptiste Collette Bayou during a period of significantly increased vessel traffic as a result of the closure of the Inner Harbor Navigational Canal Lock and to protect the environment.

DATES: This regulation is effective from July 27, 1998, at 8 a.m. local time until September 27, 1998 at 8 p.m. local time.

FOR FURTHER INFORMATION CONTACT: LT(jg) Yuri Graves (504) 589–4256. U.S. Coast Guard Marine Safety Office, 1615 Poydras St., New Orleans, LA 70112–1254.

SUPPLEMENTARY INFORMATION: In accordance with 5 U.S.C. 553, a notice of proposed rulemaking will not be published for this regulation and good cause exists for making it effective in less than 30 days after **Federal Register** publication. Publishing a NPRM and delaying its effective date would be contrary to the public interest since immediate action is needed to respond to the potential hazards to local marine traffic involved.

Drafting Information. The drafter of this regulation is LT(jg) Yuri Graves, Project Manager for the Captain of the Port, and LT(jg) M.A. Woodruff Project Counsel, Eighth Coast Guard District Legal Office.

Background and Purpose

The hazardous condition requiring this regulation is a result of the de-watering and repair of the Inner Harbor Navigation Canal Lock. The safety zone is needed to protect vessels transiting the Baptiste Collette Bayou during this period of significantly increased vessel traffic. This regulation is issued pursuant to 33 U.S.C. 1225 and 1231 as set out in the authority citation for all of Part 165.

Small Entities

Under the Regulatory Flexibility Act (5 U.S.C. 601 et. seq.), the Coast Guard must consider whether this regulation will have a significant economic impact on a substantial number of small entities. ''Small entities'' include independently owned and operated small businesses that are not dominant in their field and that otherwise qualify as ''small business concerns'' under section 3 of the Small Business Act (15 U.S.C. 632). Since the impact of this regulation on non-participating small entities is expected to be minimal, the Coast Guard certifies under 5 U.S.C. 605(b) that this regulation will not have a significant economic impact on a substantial number of small entities. This regulation will only be in effect for several hours and the impacts on small entities are expected to be minimal.

Regulatory Evaluation

This temporary rule is not a significant regulatory evaluation under Section 3(b) of Executive Order 12866 and is not significant under the ''Department of Transportation Regulatory Policies and Procedures'' (44 FR 11040; February 26, 1979). The Coast Guard expects the economic impact of this rule to be so minimal that a full regulatory evaluation is unnecessary. This regulation will only be in effect for a short period of time, and the impacts on routine navigation are expected to be minimal.

Collection of Information

This rule contains no collection of information requirements under the Paperwork Reduction Act (44 U.S.C. 3501 et seq.).

Federalism

The Coast Guard has analyzed this rule under the principles and criteria contained in Executive Order 12612 and has determined that it does not have sufficient federalism implications to warrant the preparation of a Federalism Assessment.

Environment

The Coast Guard considered the environmental impact of this proposal and concluded that under Figure 2–1, paragraph (34)(g) of Commandant Instruction M16475.1C (series), this proposal is categorically excluded from further environmental documentation.

List of Subjects in 33 CFR Part 165

Harbors, Marine Safety, Navigation (water), Reporting and Record Keeping Requirements, Safety Measures, Vessels, Waterways.

In consideration of the foregoing, Subpart F of Part 165 of Chapter 33, Code of Federal Regulations, is amended as follows:

PART 165—[AMENDED]

1. The authority citation for Part 165 continues to read as follows:

Authority: 33 U.S.C. 1225 and 1231; 50 U.S.C. 191; and 33 CFR 1.05–1(g), 6.04–1, 6.04–6, and 160.5; 49 CFR 1.46

2. A new temporary § 154.T08–047 is added to read as follows:

§ 165.T08–047 Safety Zone.

(a) *Location.* The following area is a safety zone: Baptiste Collette Bayou from its junction with the Mississippi River to Baptiste Collette Lighted Buoy #21 in Breton Sound, extending the entire width of the Bayou.

(b) *Effective date.* This section is effective from July 27, 1998 at 8 a.m. local time until September 27, 1998 at 8 p.m. local time.

(c) *Regulations.*

In accordance with the general regulations in § 165.23 of this part, entry into the zone by any vessel is prohibited unless authorized by the Captain of the Port.

W.R. Marhoffer,

Commander, U.S. Coast Guard, Captain of the Port, Acting.

[FR Doc. 98–23222 Filed 9–2–98; 8:45 am]

BILLING CODE 4910–15–M

DEPARTMENT OF COMMERCE

Patent and Trademark Office

37 CFR Part 1

RIN 0651–AA96

Revision of Patent Fees for Fiscal Year 1999; Correction

AGENCY: Patent and Trademark Office, Commerce.

ACTION: Final Rule; correction.

SUMMARY: The Patent and Trademark Office published a document revising certain patent fee amounts for fiscal year 1999 in the **Federal Register** of July 24, 1998. Inadvertently, an incorrect fee amount was stated for a national stage fee in section 1.492(a)(5). This

document corrects this national stage fee amount for fiscal year 1999.

EFFECTIVE DATE: October 1, 1998.

FOR FURTHER INFORMATION CONTACT: Matthew Lee by telephone at (703) 305–8051, fax at (703) 305–8007, or by mail marked to his attention and addressed to the Commissioner of Patents and Trademarks, Office of Finance, Crystal Park 1, Suite 802, Washington, DC 20231.

SUPPLEMENTARY INFORMATION: The Patent and Trademark Office published a final rule entitled ''Revision of Patent Fees for Fiscal Year 1999'' in the **Federal Register** of July 24, 1998 (63 FR 39731). The final rule contains an error for a national stage fee in section 1.492(a)(5). The fee amount for fiscal year 1999 was incorrectly stated as $395.00 for a small entity, and $790.00 for other than a small entity. This correction revises this national stage fee amount.

In the ''Revision of Patent Fees for Fiscal Year 1999'' final rule that was published in the **Federal Register** of July 24, 1998 (63 FR 39731), make the following correction. On page 39734, in the third column, change the national stage fee amount for section 1.492(a)(5) to $345.00 for a small entity, and $690.00 for other than a small entity.

Dated: August 28, 1998.

Kenneth R. Corsello,

Associate Solicitor.

[FR Doc. 98–23682 Filed 9–2–98; 8:45 am]

BILLING CODE 3510–16–M

ENVIRONMENTAL PROTECTION AGENCY

40 CFR Part 52

[CA 102–0091a; FRL–6150–9]

Approval and Promulgation of Implementation Plans; California State Implementation Plan Revision; Yolo-Solano Air Quality Management District

AGENCY: Environmental Protection Agency (EPA).

ACTION: Direct final rule.

SUMMARY: EPA is taking direct final action to approve a revision to the California State Implementation Plan (SIP). The revision concerns Yolo-Solano Air Quality Management District's (YSAQMD) Rule 2.34. This rule controls oxides of nitrogen (NO_X) from stationary gas turbines. This action will incorporate the rule into the Federally approved SIP. The intended effect of approving this rule is to regulate emissions of NO_X in accordance with the requirements of the Clean Air Act, as amended in 1990 (CAA or the Act). EPA is finalizing the approval of this rule into the California SIP under provisions of the CAA regarding EPA action on SIP submittals, SIPs for national primary and secondary ambient air quality standards and plan requirements for nonattainment areas.

DATES: This direct final rule is effective on November 2, 1998. without further notice, unless EPA receives adverse comments by October 5, 1998. If EPA received such comments, then it will publish a timely withdrawal in the **Federal Register** informing the public that this rule will not take effect.

ADDRESSES: Written comments must be submitted to Andrew Steckel at the Region IX office listed below. Copies of the rule and EPA's evaluation report are available for public inspection at EPA's Region IX office during normal business hours. Copies of the submitted rule are also available for inspection at the following locations:

Rulemaking Office (AIR–4), Air Division, U.S. Environmental Protection Agency, Region IX, 75 Hawthorne Street, San Francisco, CA 94105.

Environmental Protection Agency, Air Docket (6102), 401 ''M'' Street, S.W., Washington, D.C. 20460.

California Air Resources Board, Stationary Source Division, Rule Evaluation Section, 2020 ''L'' Street, Sacramento, CA 95812.

Yolo-Solano Air Quality Management District, 1947 Galileo court, Suite 103, Davis, CA 95616.

FOR FURTHER INFORMATION CONTACT: Andrew Steckel, Rulemaking Office (AIR–4), Air Division, U.S. Environmental Protection Agency, Region IX, 75 Hawthorne Street, San Francisco, CA 94105–3901, Telephone: (415) 744–1185.

SUPPLEMENTARY INFORMATION:

I. Applicability

The rule being approved into the California SIP includes YSAQMD's, Rule 2.34, Stationary Gas Turbines. This rule was submitted by the California Air Resources Board (CARB) to EPA on September 28, 1994.

II. Background

On November 15, 1990, the Clean Air Act Amendments of 1990 (CAA or the Act) were enacted. Pub. L. 101–549, 104 Stat. 2399, codified at 42 U.S.C. 7401–7671q. The air quality planning requirements for the reduction of NO_X emissions through reasonably available control technology (RACT) are set out in section 182(f) of the CAA. On November 25, 1992, EPA published a proposed rule entitled ''State Implementation Plans; Nitrogen Oxides Supplement to the General Preamble; Clean Air Act Amendments of 1990 Implementation of Title I; Proposed Rule,'' (the NO_X Supplement) which describes the requirements of section 182(f). The November 25, 1992, proposed rule should be referred to for further information on the NO_X requirements and is incorporated into this document by reference.

Section 182(f) of the Clean Air Act requires States to apply the same requirements to major stationary sources of NO_X (''major'' as defined in section 302 and section 182(c), (d), and (e)) as are applied to major stationary sources of volatile organic compounds (VOCs), in moderate or above ozone nonattainment areas. The Sacramento Metro Area in which the YSAQMD is located, is classified as serious;[1] therefore this area was subject to the RACT requirements of section 182(b)(2), cited below, and the November 15, 1992 deadline.

Section 182(b)(2) requires submittal of RACT rules for major stationary sources of VOC emissions (not covered by a pre-enactment control techniques guidelines (CTG) document or a post-enactment CTG document) by November 15, 1992. There were no NO_X CTGs issued before enactment and EPA has not issued a CTG document for any NO_X sources since enactment of the CAA. The RACT rules covering NO_X sources and submitted as SIP revisions, are expected to require final installation of the actual NO_X controls as expeditiously as practicable, but no later than May 31, 1995.

On September 28, 1994, the State of California submitted to EPA YSAQMD's Rule 2.34, Stationary Gas Turbines, which was adopted by YSAQMD on July 13, 1994. This submitted rule was found to be complete on October 21, 1994 pursuant to EPA's completeness criteria that are set forth in 40 CFR Part 51 Appendix V[2] and is being finalized for approval into the SIP. By today's document, EPA is taking direct final action to approve this submittal. This final action will incorporate this rule into the Federally approved SIP.

NO_X emissions contribute to the production of ground level ozone and

---

[1] Sacramento Metro Area retained its designation of nonattainment and was classified by operation of law pursuant to sections 107(d) and 181(a) upon the date of enactment of the CAA. See 56 FR 56694 (November 6, 1991).

[2] EPA adopted the completeness criteria on February 16, 1990 (55 FR 5830) and, pursuant to section 110(k)(1)(A) of the CAA, revised the criteria on August 26, 1991 (56 FR 42216).

smog. YSAQMD's Rule 2.34 controls emissions of NO_X from stationary gas turbines. The rule was adopted as part of YSAQMD's efforts to achieve the National Ambient Air Quality Standards (NAAQS) for ozone and in response to the CAA requirements cited above. The following is EPA's evaluation and final action for this rule.

III. EPA Evaluation and Action

In determining the approvability of a NO_X rule, EPA must evaluate the rule for consistency with the requirements of the CAA and EPA regulations, as found in section 110, and part D of the CAA and 40 CFR part 51 (Requirements for Preparation, Adoption and Submittal of Implementation Plans). The EPA interpretation of these requirements, which forms the basis for this action, appears in various EPA policy guidance documents.[3] Among these provisions is the requirement that a NO_X rule must, at a minimum, provide for the implementation of RACT for stationary sources of NO_X emissions.

For the purposes of assisting State and local agencies in developing NO_X RACT rules, EPA prepared the NO_X Supplement to the General Preamble, cited above (57 FR 55620). In the NO_X Supplement, EPA provides guidance on how RACT will be determined for stationary sources of NO_X emissions. While most of the guidance issued by EPA on what constitutes RACT for stationary sources has been directed towards application for VOC sources, much of the guidance is also applicable to RACT for stationary sources of NO_X (see section 4.5 of the NO_X Supplement). In addition, pursuant to section 183(c), EPA is issuing alternative control technique documents (ACTs), that identify alternative controls for categories of stationary sources of NO_X. The ACT documents will provide information on control technology for stationary sources that emit or have the potential to emit 25 tons per year or more of NO_X. However, the ACTs will not establish a presumptive norm for what is considered RACT for stationary sources of NO_X. In general, the guidance documents cited above, as well as other relevant and applicable guidance documents, have been set forth to ensure that submitted NO_X RACT rules meet Federal RACT requirements and are fully enforceable and strengthen or maintain the SIP.

There is currently no version of YSAQMD's Rule 2.34, Stationary Gas Turbines in the SIP. Rule 2.34 applies to all stationary gas turbines with a power rating equal to or greater than 0.3 megawatt (MW).

The CARB, after reviewing statewide control measures and several district rules, developed a RACT and BARCT guidance document entitled, ''Determination of Reasonably Available Control Technology and Best Available Retrofit Control Technology for the Control of Oxides of Nitrogen from Stationary Gas Turbines'' (RACT/BARCT determination).

CARB's RACT/BARCT determination specified RACT limits of 42 ppmv (gas-fired) and 65 ppmv (oil-fired) for units rated equal to 0.3 MW and greater. These limits are also specified as BARCT limits for units equal to 0.3 MW and less than 2.9 MW, and units that are greater than or equal to 4 MW and operating less than 877 hours per year. For units equal to 2.9 and less than 10 MW, the BARCT limits are 25 ppmv (gas-fired) and 65 ppmv (oil-fired). For units greater than or equal to 10 MW with SCR, the BARCT limits are 9 ppmv (gas-fired) and 25 ppmv (oil-fired); those without SCR are 15 ppmv (gas-fired) and 42 ppmv (oil-fired). The BARCT limits are corrected to 15 percent oxygen on a dry basis and to turbine efficiency except those 42 ppmv (gas-fired) and 65 ppmv (oil-fired) limits and oil-fired units equal to 0.3 and less than 10 MW. The emission limits in CARB's RACT/BARCT determination are generally comparable to those specified in the NO_X Supplement for electric utility boilers.

Rule 2.34 incorporates CARB's BARCT limits for gas turbines which are more stringent than RACT limits. The rule contains adequate recordkeeping requirements, and the appropriate test methods for compliance determination are referenced. The rule is consistent with all the guidance's other requirements. The exemptions provided in the rule are consistent with EPA guidelines. Therefore, Rule 2.34 meets the federal RACT By meeting the above requirements.

In evaluating the rule, EPA must determine whether the requirement for RACT implementation by May 31, 1995 is met. The rule was written such that final compliance is not required until July 13, 1998. Under certain circumstances, the determination of what constitutes RACT could include consideration of advanced control technologies, i.e., California's requirement for BARCT. In this case the CAA's May 1995 date for RACT implementation may be satisfied in BARCT rules that establish ''interim RACT'' by May 1995, and require emission limitations based on advanced control technologies such as BARCT be met after May 1995.

Rule 2.34 meets EPA's RACT guidance for emission limits and milestone towards final compliance by requiring that BARCT be implemented by July 13, 1998, and that interim measures including a compliance plan, an application for authority to construct, and start and completion of construction be met to ensure progress toward compliance with the final emission limits of the rule. A more detailed discussion of the sources controlled, the controls required, and the justification for why these controls represent RACT can be found in the Technical Support Document (TSD) for Rule 2.34, dated July 31, 1998.

EPA has evaluated the submitted rule and has determined that it is consistent with the CAA, EPA regulations and EPA policy. Therefore, YSAQMD's Rule 2.34, Stationary Gas Turbines is being approved under section 110(k)(3) of the CAA as meeting the requirements of section 110(a), section 182(b)(2), section 182(f) and the NO_x Supplement to the General Preamble.

Nothing in this action should be construed as permitting or allowing or establishing a precedent for any future request for revision to any State implementation plan. Each request for revision to the State implementation plan shall be considered separately in light of specific technical, economic and environmental factors and in relation to relevant statutory and regulatory requirements.

EPA is publishing this rule without prior proposal because the Agency views this as a noncontroversial amendment and anticipates no adverse comments. However, in the proposed rules section of this **Federal Register** publication, EPA is publishing a separate document that will serve as the proposal to approve the SIP revision should adverse comments be filed. This rule will be effective November 2, 1998 without further notice unless the Agency receives adverse comments by October 5, 1998.

If the EPA received such comments, then EPA will publish a timely withdrawal of the direct final rule informing the public that the rule will not take effect. All public comments received will then be addressed in a subsequent final rule based on the proposed rule. The EPA will not institute a second comment period on this rule. Any parties interested in

[3] Among other things, the pre-amendment guidance consists of those portions of the proposed post-1987 ozone and carbon monoxide policy that concern RACT, 52 FR 45044 (November 24, 1987); ''Issues Relating to VOC Regulation Cutpoints, Deficiencies, and Deviations, Clarification to Appendix D of November 24, 1987 **Federal Register** Notice'' (Blue Book) (notice of availability was published in the **Federal Register** on May 25, 1988).

commenting on this rule should do so at this time. If no such comments are received, the public is advised that this rule will be effective on November 2, 1998 and no further action will be taken on the proposed rule.

IV. Administrative Requirements

A. Executive Orders 12866 and 13045

The Office of Management and Budget (OMB) has exempted this regulatory action from E.O. 12866 review.

This final rule is not subject to E.O. 13045, entitled ''Protection of Children from Environmental Health Risks and Safety Risks,'' because it is not an ''economically significant'' action under E.O. 12866.

B. Regulatory Flexibility Act

Under the Regulatory Flexibility Act, 5 U.S.C. 600 *et seq.*, EPA must prepare a regulatory flexibility analysis assessing the impact of any proposed or final rule on small entities. 5 U.S.C. 603 and 604. Alternatively, EPA may certify that the rule will not have a significant impact on a substantial number of small entities. Small entities include small businesses, small not-for-profit enterprises, and government entities with jurisdiction over populations of less than 50,000.

SIP approvals under section 110 and subchapter I, part D of the Clean Air Act do not create any new requirements but simply approve requirements that the State is already imposing. Therefore, because the Federal SIP approval does not impose any new requirements, the Administrator certifies that it does not have a significant impact on any small entities affected. Moreover, due to the nature of the Federal-State relationship under the CAA, preparation of a flexibility analysis would constitute Federal inquiry into the economic reasonableness of State action. The Clean Air Act forbids EPA to base its actions concerning SIPs on such grounds. *Union Electric Co.* v. *U.S. EPA*, 427 U.S. 246, 255–66 (1976); 42 U.S.C. 7410(a)(2).

C. Unfunded Mandates

Under Section 202 of the Unfunded Mandates Reform Act of 1995 (''Unfunded Mandates Act''), signed into law on March 22, 1995, EPA must prepare a budgetary impact statement to accompany any proposed or final rule that includes a Federal mandate that may result in estimated costs to State, local, or tribal governments in the aggregate; or to private sector, of $100 million or more. Under Section 205, EPA must select the most cost-effective and least burdensome alternative that achieves the objectives of the rule and is consistent with statutory requirements. Section 203 requires EPA to establish a plan for informing and advising any small governments that may be significantly or uniquely impacted by the rule.

EPA has determined that the approval action promulgated does not include a Federal mandate that may result in estimated costs of $100 million or more to either State, local, or tribal governments in the aggregate, or to the private sector. This Federal action approves pre-existing requirements under State or local law, and imposes no new Federal requirements. Accordingly, no additional costs to State, local, or tribal governments, or to the private sector, result from this action.

D. Submission to Congress and the General Accounting Office

The Congressional Review Act, 5 U.S.C. 801 *et seq.*, as added by the Small Business Regulatory Enforcement Fairness Act of 1996, generally provides that before a rule may take effect, the agency promulgating the rule must submit a rule report, which includes a copy of the rule, to each House of the Congress and to the Comptroller General of the United States. EPA will submit a report containing this rule and other required information to the U.S. Senate, the U.S. House of Representatives, and the Comptroller General of the United States prior to publication of the rule in the **Federal Register**. This rule is not a ''major'' rule as defined by 5 U.S.C. 804(2).

E. Petitions for Judicial Review

Under section 307(b)(1) of the Clean Air Act, petitions for judicial review of this action must be filed in the United States Court of Appeals for the appropriate circuit by November 2, 1998. Filing a petition for reconsideration by the Administrator of this final rule does not affect the finality of this rule for the purposes of judicial review nor does it extend the time within which a petition for judicial review may be filed, and shall not postpone the effectiveness of such rule or action. This action may not be challenged later in proceedings to enforce its requirements. (See section 307(b)(2).)

List of Subjects in 40 CFR Part 52

Environmental protection, Air pollution control, Hydrocarbons, Incorporation by reference, Intergovernmental relations, Nitrogen dioxide, Ozone, Reporting and recordkeeping requirements, Volatile organic compound.

Note: Incorporation by reference of the State Implementation Plan for the State of California was approved by the director of the Federal Register on July 1, 1982.

Dated: August 13, 1998.

Laura Yoshi,

Deputy Regional Administrator, Region IX.

Part 52, chapter I, title 40 of the Code of Federal Regulations is amended as follows:

PART 52—[AMENDED]

1. The authority citation for part 52 continues to read as follows:

Authority: 42 U.S.C. 7401 *et seq.*

Subpart F—California

2. Section 52.220 is amended by adding paragraph (c)(199)(i)(E)(*1*) to read as follows:

§ 52.220 Identification of plan.

* * * * *

(c) * * *

(199) * * *

(i) * * *

(E) Yolo-Solano Air Quality Management District

(*1*) Rule 2.34, adopted on July 13, 1994

* * * * *

[FR Doc. 98–23500 Filed 9–2–98; 8:45 am]

BILLING CODE 6560–50–P

ENVIRONMENTAL PROTECTION AGENCY

40 CFR Part 52

[KY–104–9818a; FRL–6152–9]

Approval and Promulgation of Implementation Plans; Commonwealth of Kentucky

AGENCY: Environmental Protection Agency (EPA).

ACTION: Direct final rule.

SUMMARY: EPA is approving revisions to the Edmonson County and Owensboro portions of the Kentucky State Implementation Plan (SIP) submitted on April 16, 1998, through the Kentucky Natural Resources and Environmental Protection Cabinet (NREPC). The purpose of this action is to incorporate revised motor vehicle emissions budgets for Owensboro and Edmonson, Kentucky. These budgets are used for demonstration of conformity of transportation plans, programs, and projects with the Kentucky SIP for the Edmonson County and Owensboro ozone maintenance areas. This action is

in accordance with the Transportation Conformity Rule promulgated on November 24, 1993, and subsequent amendments.

DATES: This direct final rule is effective on November 2, 1998, without further notice, unless EPA receives adverse comments by October 5, 1998. If adverse comment is received, EPA will publish a timely withdrawal of the direct final rule in the **Federal Register** and inform the public that the rule will not take effect.

ADDRESSES: Written comments should be addressed to: Kelly Sheckler at the Region 4, Environmental Protection Agency, Air Planning Branch, 61 Forsyth Street, SW, Atlanta, Georgia 30303.

Copies of the documents relative to this action are available for public inspection during normal business hours at the following locations. The persons wanting to examine these documents should make an appointment with the appropriate office at least 24 hours before the visiting day. Reference file number KY–104–9818. The Region 4 office may have additional background documents not available at the other locations.

Air and Radiation Docket and Information Center (Air Docket 6102), U.S. Environmental Protection Agency, 401 M Street, SW, Washington, D.C. 20460.

Environmental Protection Agency, Region 4 Air Planning Branch, 61 Forsyth Street, SW, Atlanta, Georgia 30303.

Kentucky Department for Environmental Protection, 803 Schenkel Lane, Frankfort, Kentucky 400601.

FOR FURTHER INFORMATION CONTACT: Kelly Sheckler at (404) 562–9042. Reference file KY–104–9818.

SUPPLEMENTARY INFORMATION: The Commonwealth of Kentucky through the KNREPC submitted an attainment and maintenance plan for the Edmonson County and Owensboro ozone nonattainment areas on November 13, 1992. The Owensboro area consists of Daviess County and a portion of Hancock County. The Commonwealth of Kentucky's request for redesignation of the Edmonson County and Owensboro ozone nonattainment areas was approved by EPA because the areas attained the ozone NAAQS, met all relevant requirements under section 110 and part D of the CAA, had a fully approved SIP under section 110(k) of the CAA, demonstrated permanent and enforceable air quality improvement, and had a maintenance plan satisfying the requirements of section 175A of the CAA. For further detail on this rulemaking refer to 59 FR 55058, dated November 3, 1994. This SIP contained comprehensive inventories of volatile organic compound (VOC), nitrogen oxide (NO_X), and carbon dioxide (CO) emissions for the Edmonson County and Owensboro ozone areas. The inventories include biogenic, area, stationary, and mobile sources using 1990 as the base year for projections to demonstrate maintenance. The 1990 inventory is considered representative of attainment conditions because the NAAQS was not violated during 1990.

EPA approved this revision of the Kentucky SIP and redesignated the area from nonattainment to attainment for ozone effective January 3, 1995. At the time of this submittal, EPA had not finalized the Transportation Conformity rule which provides the criteria and procedures by which the transportation planning authorities must show that transportation plans and projects conform to the emission estimates in the applicable state maintenance plan. In the maintenance SIP, the Commonwealth did not provide an explicit motor vehicles emissions budget for the purposes of showing conformity. However, the Transportation Conformity regulations at 40 CFR 51.456 were promulgated on November 24, 1993, and defined a mobile source emissions budget for determining conformity of transportation as the mobile source portion of the total allowable emissions defined in the submitted or approved control strategy implementation plan revision or maintenance plan. The Commonwealth established an emissions baseline inventory as part of its redesignation and maintenance SIP. As required for maintenance demonstrations, the emission projections from the baseline inventory were developed for a ten year period. In areas subject to conformity, that had not established an emissions budget per 40 CFR 51.456, a SIP approved emissions projection inventory would be used as the emissions budget for conformity purposes. Therefore, the emission projections inventory provided in the Commonwealth's maintenance plan became the emissions budget for conformity.

Furthermore, 40 CFR Part 93.118, allows states to revise their emissions budgets at any time through the standard SIP revision process, provided the submittal demonstrates that the revised emissions budget will not interfere with attainment and maintenance of the standard or any milestones in the required time frame.

The Clean Air Act (CAA), as amended in 1990, defines conformity to an implementation plan as conformity to the plan's purpose of reducing the severity and number of violations of the National Ambient Air Quality Standards (NAAQS) and achieving expeditious attainment of such standards. Specifically, the CAA requires transportation improvement programs (TIP) and Long Range Transportation Plans that are federally funded or approved actions will not cause or contribute to any new violation, increase the frequency or severity of any existing violation, or delay timely attainment of any standard or any required interim emission reductions or other milestones in any area. Therefore, the emissions expected from implementation of such transportation plans and programs must be consistent with estimates of emissions from a maintenance plan.

The total emissions in the revised emissions budget for the Edmonson County and Owensboro ozone maintenance areas are below the 1990 levels through the period of projection necessary for the attainment and maintenance plan, i.e., through 2005. Due to reductions expected from new and/or future federal emission standards, non-road source emissions are projected to decrease below the levels projected in the original maintenance plan. The safety margin created from this category is allotted to the on-road mobile source emissions budget. As provided in the table below, the reallotted emissions budget maintains the 1990 levels and is consistent with the redesignation/maintenance demonstration SIP.

NO_X Emissions Inventory Summary

[Tons per day]

Category	1990	1993	1996	1999	2002	2004
Edmonson County						
Mobile	.86	.83	.81	.79	.77	.78
Area	.04	.04	.04	.04	.04	.04
Point	0	0	0	0	0	0
Nonroad	.37	.38	.39	.40	.40	.41
Total	1.27	1.25	1.24	1.23	1.22	1.23
Daviess County						
Mobile	5.33	5.25	5.17	5.11	5.04	5.10
Area	.22	.22	.22	.22	.22	.22
Point	39.20	38.92	38.65	38.37	38.10	37.92
Nonroad	2.91	2.89	2.87	2.85	2.83	2.82
Total	47.66	47.28	46.91	46.55	46.19	46.06
Hancock County						
Mobile	.14	.14	.13	.13	.12	.12
Area	0	0	0	0	0	0
Point	42.86	42.89	42.93	42.97	43.01	43.04
Nonroad	.16	.16	.16	.16	.16	.16
Total	43.16	43.19	43.22	43.26	43.29	43.32

VOC Emissions Inventory Summary

[Tons per day]

Category	1990	1993	1996	1999	2002	2004
Edmonson County						
Mobile	1.24	.79	.75	.73	.72	.72
Area	.74	.76	.77	.79	.80	.82
Point	0	0	0	0	0	0
Nonroad	.45	.46	.47	.48	.49	.50
Total	2.43	2.01	1.99	2.00	2.01	2.04
Daviess County						
Mobile	10.18	6.65	6.48	6.42	6.44	6.53
Area	5.29	5.25	5.22	5.18	5.15	5.13
Point	13.23	13.13	13.04	12.95	12.86	12.80
Nonroad	3.84	3.81	3.79	3.76	3.74	3.72
Total	32.54	28.84	28.53	28.31	28.19	28.18
Hancock County						
Mobile	.20	.13	.12	.12	.11	.11
Area	.08	.08	.08	.08	.08	.08
Point	3.23	3.30	3.30	3.30	3.31	3.31
Nonroad	.09	.09	.09	.09	.09	.09
Total	3.60	3.60	3.59	3.59	3.59	3.59

Final action

EPA is approving Kentucky's revised emission budget for the Edmonson County and Owensboro ozone maintenance area. The Agency has reviewed this request for revision of the Federally approved State implementation plans (SIP) for conformance with the provisions of the Amendments enacted on November 15, 1990, and the Transportation Conformity Rule promulgated on November 24, 1993 and amended on August 15, 1997. The Agency has determined that this request conforms to those requirements. Therefore, this action revises the motor vehicle emissions budget for the Kentucky Counties of Edmonson, Daviess and a portion of Hancock.

EPA is publishing this rule without prior proposal because the Agency views this as a noncontroversial amendment and anticipates no adverse

comments. However, in the proposed rules section of this **Federal Register** publication, EPA is publishing a separate document that will serve as the proposal to approve the SIP revision should relevant adverse comments be filed. This rule will be effective November 2, 1998 without further notice unless the Agency receives relevant adverse comments by October 5, 1998.

If the EPA receives such comments, then EPA will publish a timely withdrawal of the direct final rule informing the public that the rule will not take effect. All public comments received will then be addressed in a subsequent final rule based on the proposed rule. The EPA will not institute a second comment period on this rule. Only parties interested in commenting on the rule should do so at this time. If no such comments are received, the public is advised that this rule will be effective on November 2, 1998 and no further action will be taken on the proposed rule.

The ozone SIP is designed to satisfy the requirements of part D of the CAA and to provide for attainment and maintenance of the ozone NAAQS. Approval of this motor vehicle emissions budget should not be interpreted as authorizing the State to delete, alter, or rescind any of the VOC or NO_X emission limitations and restrictions contained in the approved ozone SIP. Changes to ozone SIP VOC regulations rendering them less stringent than those contained in the EPA approved plan cannot be made unless a revised maintenance plan is submitted to and approved by EPA. Unauthorized relaxations, deletions, and changes could result in both a finding of non-implementation [section 173(b) of the CAA] and in a SIP deficiency call made pursuant to section 110(a)(2)(H) of the CAA.

Nothing in this action will be construed as permitting or allowing or establishing a precedent for any future request for a revision to any SIP. Each request for revision to the SIP will be considered separately in light of specific technical, economic, and environmental factors and in relation to relevant statutory and regulatory requirements.

Nothing in this action should be construed as making any determination or expressing any position regarding Kentucky's audit privilege and penalty immunity law KRS 224.01–040 or its impact upon any approved provision in the SIP, including the revision at issue here. The action taken herein does not express or imply any viewpoint on the question of whether there are legal deficiencies in this or any other Clean Air Act program resulting from the effect of Kentucky's audit privilege and immunity law. A state audit privilege and immunity law can affect only state enforcement and cannot have any impact on federal enforcement authorities. EPA may at any time invoke its authority under the Clean Air Act, including, for example, sections 113, 167, 205, 211 or 213, to enforce the requirements or prohibitions of the state plan, independently of any state enforcement effort. In addition, citizen enforcement under section 304 of the Clean Air Act is likewise unaffected by a state audit privilege or immunity law.

I. Administrative Requirements

A. Executive Order 12866

The Office of Management and Budget (OMB) has exempted this regulatory action from review under Executive Order 12866, entitled Regulatory Planning and Review.

B. Executive Order 13045

The final rule is not subject to Executive Order 13045, entitled Protection of Children from Environmental Health Risks and Safety Risks, because it is not an ''economically significant'' action under Executive Order 12866.

C. Regulatory Flexibility Act

Under the Flexibility Act, 5 U.S.C. 600 *et seq.*, EPA must prepare a regulatory flexibility analysis assessing the impact of any proposed or final rule on small entities. 5 U.S.C sections 603 and 604. Alternatively, EPA may certify that the rule will not have a significant economic impact on a substantial number of small entities. Small entities include small businesses, small not-for-profit enterprises, and government entities with jurisdiction over populations of less than 50,000.

SIP approvals under section 110 and subchapter I, part D of the CAA does not create any new requirements, but simply approve requirements that the state is already imposing. Therefore, because the federal SIP-approval does not impose any new requirements, I certify that it does not have a significant impact on small entities. Moreover, due to the nature of the federal-state relationship under the CAA, preparation of a regulatory flexibility analysis would constitute federal inquiry into the economic reasonableness of state action. The CAA forbids EPA to base its actions concerning SIPs on such grounds. *Union Electric Co.* v. *U.S. E.P.A.*, 427 U.S. 246, 256–66 (S.Ct. 1976); 42 U.S.C. section 7410 (a)(2) and, 7410 (k)(3).

D. Unfunded Mandates

Under Section 202 of the Unfunded Mandates Reform Act of 1995 (''Unfunded Mandates Act''), signed into law on March 22, 1995, EPA must prepare a budgetary impact statement to accompany any proposed or final rule that includes a Federal mandate that may result in estimated costs to State, local, or tribal governments in the aggregate, or to the private sector, of $100 million or more. Under Section 205, EPA must select the most cost effective and least burdensome alternative that achieves objectives of the rule and is consistent with statutory requirements. Section 203 requires EPA to establish a plan for informing and advising any small governments that may be significantly or uniquely impacted by the rule.

EPA has determined that the approval promulgated does not include a Federal mandate that may result in estimated costs of $100 million or more to either State, local, or tribal governments in aggregate, or to the private sector. This Federal action approves pre-existing requirements under State or local law, and imposes no new requirements. Accordingly, no additional costs to State, local, or tribal governments, or to the private sector, result from this action.

E. Submission to Congress and the Comptroller General

The Congressional Review Act, 5 U.S.C. 801 *et seq.*, as added by the Small Business Regulatory Enforcement Fairness Act of 1996, generally provides that before a rule may take effect, the agency promulgating the rule must submit a rule report, which includes a copy of the rule, to each House of the Congress and to the Comptroller General of the United States. EPA will submit a report containing this rule and other required information to the U.S. Senate, the U.S. House of Representatives, and the Comptroller General of the United States prior to publication of the rule in the **Federal Register**. This rule is not a ''major rule'' as defined by 5 U.S.C. 804(2).

F. Petitions for Judicial Review

Under Section 307((b)(1) of the Clean Air Act, petitions for judicial review of this action must be filed in the United States Court of Appeals for the appropriate circuit by November 2, 1998. Filing a petition for reconsideration by the Administrator of this final rule does not affect the finality of this rule for the purposes of judicial review nor does it extend the time within which a petition for judicial

review may be filed, and will not postpone the effectiveness of such rule or action. This action may not be challenged later in proceedings to enforce its requirements. (See section 307(b)(2).)

List of Subjects in 40 CFR Part 52

Environmental protection, Air pollution control, Carbon monoxide, Hydrocarbons, Incorporation by reference, Intergovernmental relations, Nitrogen dioxide, Ozone.

Dated: July 30, 1998.

A. Stanley Meiburg,

Acting Regional Administrator, Region 4.

Part 52 of chapter I, title 40, *Code of Federal Regulations,* is amended as follows:

PART 52—[AMENDED]

1. The authority citation for part 52 continues to read as follows:

Authority: 42.U.S.C. 7401 *et seq.*

Subpart S—Kentucky

2. Section 52.920, is amended by adding paragraph (c)(91) to read as follows:

§ 52.920 Identification of plan.

* * * * *

(c) * * *

(91) The maintenance plan for Edmonson County and Owensboro ozone area submitted by the Commonwealth of Kentucky through the Natural Resources and Environmental Protection Cabinet on April 16, 1998, as part of the Kentucky SIP.

(i) Incorporation by reference.

Mobile Emissions Budgets for Owensboro Area and Edmonson County Marginal Ozone Maintenance Areas: Introduction page and Tables 1 through 8 effective April 14, 1998.

(ii) Other material. None.

[FR Doc. 98–23502 Filed 9–2–98; 8:45 am]

BILLING CODE 6560–50–P

ENVIRONMENTAL PROTECTION AGENCY

48 CFR Parts 1504, 1542, and 1552

[FRL–6155–5]

Acquisition Regulation: Administrative Amendments

AGENCY: Environmental Protection Agency.

ACTION: Final rule.

SUMMARY: The Environmental Protection Agency (EPA) is amending the EPA Acquisition Regulation (EPAAR) (48 CFR Chapter 15) removing from the EPAAR unnecessary coverage that duplicates existing FAR coverage on quick-closeout procedures, and making other administrative changes.

EFFECTIVE DATE: September 3, 1998.

FOR FURTHER INFORMATION CONTACT: Paul Schaffer, U.S. Environmental Protection Agency, Office of Acquisition Management (3802R), 401 M Street, SW, Washington, D.C. 20460, Telephone: 202–564–4366.

SUPPLEMENTARY INFORMATION:

A. Background

This final rule eliminates EPAAR 1542.708 Quick-Closeout Procedures which duplicates existing FAR coverage (FAR 42.708), and makes other administrative changes. As authorized by section 22(a) of the Office of Federal Procurement Policy Act, 41 U.S.C. 418b, this rule is being issued without notice and opportunity for public comment because it does not have a significant effect beyond the internal operating procedures of the Agency, and it does not impose a significant cost or administrative impact on contractors or offerors.

B. Executive Order 12866

The final rule is not a significant regulatory action for the purposes of Executive Order 12866; therefore, no review was required by the Office of Information and Regulatory Affairs within the Office of Management and Budget (OMB).

C. Paperwork Reduction Act

The Paperwork Reduction Act does not apply because this final rule does not contain information collection requirements that require the approval of OMB under the Paperwork Reduction Act of 1980 (44 U.S.C. 3501 *et seq.*)

D. Regulatory Flexibility Act

The EPA certifies that this final rule does not exert a significant economic impact on a substantial number of small entities. The requirements to contractors under the rule impose no reporting, record-keeping, or any compliance costs.

E. Unfunded Mandates

Title II of the Unfunded Mandates Reform Act of 1995 (UMRA), Pub. L. 104–4, establishes requirements for Federal agencies to assess their regulatory actions on State, local, and tribal governments, and the private sector. This final rule does not contain a Federal mandate that may result in expenditures of $100 million or more for State, local, and tribal governments, in the aggregate, or the private sector in one year. Any private sector costs for this action relate to paperwork requirements and associated expenditures that are far below the level established for UMRA applicability. Thus, the rule was not subject to the requirements of sections 202 and 205 of the UMRA.

F. Submission to Congress and the General Accounting Office

The Congressional Review Act, 5 U.S.C. 801 *et seq.*, as added by the Small Business Regulatory Enforcement Fairness Act of 1996, generally provides that before a rule may take effect, the agency promulgating the rule must submit a rule report, which includes a copy of the rule, to each House of the Congress and to the Comptroller General of the United States. EPA will submit a report containing this rule and other required information to the U.S. Senate, the U.S. House of Representatives and the Comptroller General of United States prior to publication of the rule in the **Federal Register**. This rule is not a ''major rule'' as defined by 5 U.S.C. 804(2).

G. Executive Order 13045

Protection of Children from Environmental Health Risks and Safety Risks (62 FR 19885, April 23, 1997), applies to any rule that: (1) is determined to be '''economically significant''' as defined under Executive Order 12866, and (2) concerns an environmental health or safety risk that EPA has reason to believe may have a disproportionate effect on children. If the regulatory action meets both criteria, the Agency must evaluate the environmental health or safety effects of the planned rule on children, and explain why the planned regulation is preferable to other potentially effective and reasonably feasible alternatives considered by the Agency.

This rule is not subject to E.O. 13045 because it is not an economically significant rule as defined by E.O. 12866, and because it does not involve decisions on environmental health or safety risks.

List of Subjects in 48 CFR Parts 1504, 1542, and 1552

Environmental protection, Government procurement.

Therefore, 48 CFR Chapter 15 is amended as set forth below:

1. The authority citation for Parts 1504, 1542 and 1552 continue to read as follows:

Authority: The provisions of this regulation are issued under 5 U.S.C. 301; Sec. 205(c),63 Stat. 390, as amended.

§ 1504.804–5 [Amended]

2. Section 1504.804–5 is amended by revising the reference ''1542.708'' to read ''FAR 42.708.''

§ 1542.708 [Removed]

3. Section 1542.708 is removed.

4. Section 1552.209–71 is amended by revising ''ALTERNATE I to Paragraph (e)'' to read as follows:

§§ 1552.209–71 Organizational conflicts of interest.

* * * * *

ORGANIZATIONAL CONFLICTS OF INTEREST (MAY 1994)

* * * * *

ALTERNATE I

Contracts for other than Superfund work shall include Alternate I in this clause in lieu of paragraph (e).

(e) The Contractor agrees to insert in each subcontract or consultant agreement placed hereunder provisions which shall conform substantially to the language of this clause, including this paragraph, unless otherwise authorized by the contracting officer.

§ 1552.211–70 [Amended]

5. Section 1552.211–70 and ALTERNATE I is amended by revising the OMB clearance number 2030–0005 expiration date of ''May 31, 1986'' to read ''January 31, 2000.''

§ 1552.216–74 [Amended]

6. Section 1552.216–74 is amended by revising the reference in paragraph (b) ''1552.212–70'' to read ''1552.211–73.''

Dated: August 24, 1998.

Betty L. Bailey,

Director, Office of Acquisition Management.

[FR Doc. 98–23816 Filed 9–2–98; 8:45 am]

BILLING CODE 6560–50–P

DEPARTMENT OF TRANSPORTATION

National Highway Traffic Safety Administration

49 CFR Part 571

Federal Motor Vehicle Safety Standards; Denial of Petition for Rulemaking

AGENCY: National Highway Traffic Safety Administration (NHTSA), Department of Transportation (DOT).

ACTION: Denial of petition for rulemaking.

SUMMARY: This document denies a petition for rulemaking submitted by Dr. Richard H. McSwain to regulate the bottom of automotive fuel tanks to protect them from rupture by roadway hazards. Neither the information submitted by the petitioner nor information otherwise available to the agency indicate that the matter identified by the petitioner is a safety problem warranting regulatory action.

FOR FURTHER INFORMATION CONTACT: For non-legal issues: Dr. William J.J. Liu, Office of Crashworthiness Standards, National Highway Traffic Safety Administration, 400 Seventh Street, SW, Washington, DC 20590. Telephone: (202) 366–4923. Facsimile (202) 366–4329.

For legal issues: Nicole Fradette, Office of Chief Counsel, NCC–20, National Highway Traffic Safety Administration, 400 Seventh Street, SW, Washington, DC 20590. Telephone: (202) 366–2992. Facsimile (202) 366–3820.

SUPPLEMENTARY INFORMATION: By petition dated July 17, 1997, Dr. Richard H. McSwain requested the agency to issue a regulation that would protect the bottom of automotive fuel tanks from roadway hazards. The petitioner asserted that, over the past five years, numerous deaths have occurred from vehicle fires caused by the rupture of the bottom of the vehicle's fuel tank by roadway hazards.[1] Dr. McSwain did not quantify the number of those deaths, but did enclose news articles about several allegedly related crashes. He also stated that European motor vehicle standards require the protection of the fuel tank bottom and enclosed Volume 2 of the German ''Motor Vehicle Construction and Use Regulations'' (1995) and Economic Commission for Europe (ECE) Regulation No. 34, ''Uniform Provision Concerning the Approval of Vehicles with Regard to the Prevention of Fire Risks'' (01 Series, Addendum 33 to Amendment 1, January 18, 1979).

The petitioner also stated that several U.S. government agencies have recognized the need for protection of fuel tank bottoms. In support of that claim, he enclosed a 1970 Multidisciplinary Accident Investigation report of a case involving a vehicle fire prepared for the U.S. National Highway Safety Bureau (NHSB), a predecessor of NHTSA. The NHSB study examined a major vehicle fire that occurred following a severe crash in which the vehicle's structure was severely deformed, compressing the fuel tank between the left and right frame rails. The tank ruptured at the seams, allowing fuel to escape. The fuel was ignited by the sparks created when the vehicle hit a concrete culvert. The NHSB study recommended incorporating additional protection in fuel tanks to prevent them from rupturing in a crash. The study also recommended installing a protective lining inside of the fuel tank to prevent fuel spillage in the event of a fuel tank rupture.

The petitioner also submitted a 1984 National Transportation Safety Board (NTSB) Safety Recommendation directed to the Motor Vehicle Manufacturers Association (MVMA). The NTSB recommendations were the result of a study of a severe crash that occurred when 22 vehicles drove at speeds ranging from 5 to 50 mph into the dense smoke of a grass fire and were involved in multiple collisions. The fuel tanks of seven of the vehicles ruptured, spilling fuel. The fuel ignited and a major fire ensued. The NTSB study encouraged vehicle manufacturers to develop and apply more effective technology to ensure fuel system integrity during high speed crashes.

To promulgate or amend a vehicle safety requirement, NHTSA must decide that a safety problem exists, that the problem is significant enough to warrant regulation, and that the requirement would reduce the problem and thus meet the need for motor vehicle safety. In this instance, NHTSA has found no basis for concluding that there is a safety problem warranting regulatory action with respect to the rupturing of the bottom of fuel tanks by roadway hazards.

Although the petitioner enclosed several news accounts of vehicle fires caused by ruptured fuel tanks, specifically four news items of severe crashes, and two old case studies of severe crashes, he did not demonstrate that there was a significant safety problem with vehicle fuel tank ruptures by roadway hazards. Further, NHTSA is not aware of information from other sources, including its own, demonstrating the existence of a significant problem.

Most of the information submitted by the petitioner does not appear to relate to the issue of the susceptibility of the bottom of fuel tanks to rupture by roadway hazards. The agency notes that the vehicle fire discussed in the NHSB study occurred when the fuel tank ruptured due to the intrusion of the vehicle frame into the sides, not the bottom, of the fuel tank. The NHSB study did not specifically recommend regulating the bottom of fuel tanks. Further, the 1984 NTSB study recommended that the MVMA develop and apply more effective technology to reduce breaches in the fuel system and to minimize any fuel loss if a breach occurs, particularly in crashes involving

[1] The petitioner did not define what he meant by ''roadway hazards.'' The agency understands the petitioner to be referring to roadway debris and not the roadway elements, such as guardrails and curbs.

high speed differentials. The NTSB study did not specifically recommend regulating the underside of fuel tanks.

The agency notes that, contrary to the petitioner's statement, neither the 1979 ECE Reg. No. 34 nor the 1995 German ''Motor Vehicle Construction and Use Regulations'' specify tests for the bottom of fuel tanks. Moreover, NHTSA has compared Federal Motor Vehicle Safety Standard (FMVSS) No. 301, Fuel System Integrity, to several foreign fuel system integrity standards, including ECE Reg. No. 34, and determined that NHTSA's standard requires more stringent crash tests than the ECE standard (60 FR 18566; April 12, 1995). As to the media reports about particular crashes that the petitioner believes involved the rupturing of the bottom of fuel tanks, the agency notes that only one of the four news reports clearly stated that the vehicle fire was caused by the rupture of the underside of the vehicle's fuel tank by roadway debris. The other three reports simply stated that the vehicles' fuel tanks ruptured after the vehicles struck a guardrail and, in one case, rolled over. Although the three reports did not specify the location of the ruptures, the description of the crashes indicate that the ruptures did not occur in the underside of the vehicles.

In addition to the information submitted by the petitioner, the agency considered its own information. As part of its research now underway relating to a possible upgrade of FMVSS No. 301, (49 CFR 571.301), NHTSA has collected data regarding vehicle crash fires. The data do not show a significant problem with vehicle fires resulting from the rupture of fuel tanks by roadway debris. According to a review of 1993–1995 Fire Case Reports from the National Automotive Sampling System (NASS)[2], 74.1 percent of all vehicle fires originate in the vehicle's engine compartment and 18.9 percent originate in the fuel tank. According to the review, most of the fires associated with the fuel tank involved ignition of gasoline leaking from ruptures or punctures due to collisions with other vehicles or due to single vehicles hitting roadway curbs, sign posts, embankments, etc., not roadway debris. The review identified five cases of vehicle fires originating in the undercarriage area between 1993 and 1995. In the first case, the crash investigation report stated that the fire occurred in the engine compartment ''due to the undercarriage damage.'' The case was later reclassified as a ''front'' fire. In the second case, the crash investigation report stated that the fire occurred during the vehicle's rollover sequence, off the roadway, after the vehicle hit a roadway ''curbstone'' at 40–45 mph and ruptured its fuel tank. In this case, one occupant suffered a Maximum Abbreviated Injury Scale 6 burn injury. In the third case, the crash investigation report stated that the vehicle struck and ran over a roadway sign post. The report said that the fire occurred off the roadway when the ''stump'' of the sign post punctured the vehicle's fuel tank ''igniting the fumes and or fuel.'' In the fourth case, the crash investigation report stated that the vehicle went out of control and ''went off the left side of the roadway down a steep embankment.'' It added that the fire occurred when gasoline from a leaking or ruptured fuel tank ignited. In the fifth case, the crash investigation report stated that the fire occurred when the vehicle hit an open man-hole and its ''rear wheel sunk into the [hole] causing the gas tank to contact the roadway.'' No occupant suffered a burn injury in the third, fourth, and fifth cases. As previously stated, none of these fires occurred as a result of roadway debris striking the undercarriage of the vehicle. Even if the petitioner were referring in his petition to these types of events as well as fire occurrences due to roadway debris, any rulemaking action to only address this problem would be very limited in scope and would not be significant enough to warrant an amendment of FMVSS No. 301.

On April 12, 1995, NHTSA published an Advance Notice of Proposed Rulemaking (ANPRM) announcing the agency's plans to consider upgrading FMVSS No. 301 by making the crash requirements more stringent and by broadening the standard's focus to include mitigation concepts related to fuel system components and environmental and aging tests related to fuel system components (60 FR 18566). The notice announced a three-phase approach to upgrade the standard: Phase 1, Component Level Performance; Phase 2, System Level Performance; and Phase 3, Environmental and Aging Effects.

As part of its ongoing effort to upgrade the standard, the agency is conducting research and evaluation on high incidence cases of vehicle fires, including ones associated with rear impact crashes and with the engine compartment originated fires occurring in frontal crashes. Further, the agency is seriously pursuing an upgrade of the current rear impact requirements of FMVSS No. 301. This should result in improved vehicle fuel system protection, including improved fuel tank integrity. The agency conducted a series of rear impact tests on various vehicle sizes and is currently planning a series of repeatability tests. The results of this research program will serve as a basis for an agency decision as to whether to issue a proposal to amend the standard.

In accordance with 49 CFR part 552, this completes the agency's review of the petition. The agency has concluded that there is no reasonable possibility that the amendment requested by the petitioner would be issued at the conclusion of a rulemaking proceeding. After considering all relevant factors, the agency has decided to deny the petition.

Authority: 49 U.S.C. 30103, 30162; delegation of authority at 49 CFR 1.50 and 501.8.

Issued on: August 27, 1998.

L. Robert Shelton,

Associate Administrator for Safety Performance Standards.

[FR Doc. 98–23490 Filed 9–2–98; 8:45 am]

BILLING CODE 4910–59–P

[2] ''Clinical Review of NASS Fire Case Reports,'' Contract No. DTNH22–93–C–07034, January 24, 1997.

DEPARTMENT OF THE INTERIOR

Fish and Wildlife Service

50 CFR Part 17

RIN 1018–AE31

Endangered and Threatened Wildlife and Plants; Final Rule To List the Illinois Cave Amphipod as Endangered

AGENCY: Fish and Wildlife Service, Interior.

ACTION: Final rule.

SUMMARY: The U.S. Fish and Wildlife Service (Service) determines the Illinois cave amphipod (*Gammarus acherondytes*) to be an endangered species pursuant to the Endangered Species Act (Act) of 1973, as amended. Historically, the Illinois cave amphipod was known from six cave streams in Monroe and St. Clair counties, Illinois. This amphipod is a cave-dependent species living in the dark zone of cave entrances. Recent surveys have found the species at only three of the original six sites, although one of the six sites is no longer accessible for surveys. This species is believed to be threatened primarily by degraded groundwater quality resulting from various sources, such as the application of agricultural and residential pesticides and fertilizers in cave stream recharge areas, and contamination from human and animal wastes from residential septic systems and livestock feedlots. This action implements the Federal protection of the Act for the Illinois cave amphipod.

DATES: This rule is effective October 5, 1998.

ADDRESSES: The complete file for this rule is available for public inspection, by appointment, during normal business hours at the U.S. Fish and Wildlife Service's Rock Island Field Office, 4469 48th Avenue Court, Rock Island, Illinois 61201.

FOR FURTHER INFORMATION CONTACT: Richard C. Nelson, Field Supervisor, Illinois Field Office (see **ADDRESSES** section) (telephone 309/793–5800; facsimile 309/793–5804).

SUPPLEMENTARY INFORMATION:

Background

Hubricht and Mackin (1940) described the Illinois cave amphipod (*Gammarus acherondytes*). Leslie Hubricht collected the Type specimens in 1938 from Morrison's Cave (now Illinois Caverns), near Burksville, Illinois.

Sexually mature males are up to 20.0 millimeters (mm) (0.8 inch (in.)) long; sexually mature females are 12.0 to 16.0 mm (0.5 to 0.6 in.) long. The amphipod's color is light gray-blue, and the eyes are reniform (kidney-shaped), small and degenerate with the pigment drawn away from the facets in an irregular black mass. The first antenna is long and slender, more than one-half the length of the body. The primary flagellum has up to 40 segments and the secondary flagellum has up to 6 segments. The second antenna is about three-fourths as long as the first antenna. The flagellum of the second antenna has up to 18 segments and lacks sensory organs in either sex. Hubricht and Mackin (1940) reported that its clutch size is up to 21 eggs, and Holsinger (1972) reported that ovigerous (egg-bearing) females have been observed in summer and fall.

This species is best differentiated from other amphipods in the field, especially from *Gammarus fasciatus*, which it resembles, by its color, small degenerate eyes, and a much longer first antenna. It is usually associated with the larger *G. troglophilus* (Hubricht and Mackin 1940) but is much less common (Holsinger 1972).

This species is a troglobitic (cave-dependent) species inhabiting the dark zone of cave streams. As a group, amphipods require cold water and are intolerant of wide ranges in temperature. They are strongly sensitive to touch and react negatively to light. High levels of dissolved oxygen appear to be an environmental necessity. They are omnivorous scavengers, feeding on dead animal and plant matter or the thin bacterial film covering most submerged surfaces throughout their aquatic habitat.

The Illinois cave amphipod is endemic to the Illinois Sinkhole Plain of Monroe and St. Clair counties and was historically known from six cave systems, which are all within a 16-kilometer (10-mile) radius of Waterloo, Illinois. The main entrances to two of the caves, Illinois Caverns and Fogelpole Cave, are in public ownership and the other four are privately owned. The cave streams from which this species is historically known are each fed by a distinct watershed or recharge area; and there are no known interconnections between them, or with other cave systems. Two of the six caves may become hydrologically connected during extremely high rainfall over short periods of time (Samuel V. Panno, Illinois Natural History Survey, Champaign, IL, *in litt.* 1996). Thus, it is believed that there is virtually no opportunity for this species to become distributed to other cave systems via natural pathways.

There are few data or adequate survey techniques on which to base population, productivity, or trend estimates for this species. Sampling for cave fauna is difficult at best, and the challenges of surveying are compounded by the relatively small size of this species and the difficulty of researchers to distinguish it from other similar amphipods in the field. Thus, survey data are not sufficient to accurately record numbers of this small subterranean invertebrate; however, they do demonstrate a reduction in its range and the number of extant populations. Since Hubricht's initial 1938 collections of unknown numbers from 2 caves, other collections have been made in 1965 (at least 19 specimens taken from the 2 caves sampled in 1938, plus a third cave), 1972 (unknown numbers taken from 2 additional caves), 1974 (6 specimens taken from 1 cave sampled in 1938), 1986 (2 specimens taken from 1 cave sampled in 1938 and from a new, sixth cave), 1992 (20 specimens taken from 1 cave sampled in 1938), and 1993 (11 specimens taken from 2 caves sampled in 1938) (Webb 1995).

The most recent and extensive sampling effort was in 1995 in which the Illinois Natural History Survey (INHS) investigated 25 caves in the Illinois Sinkhole Plain and confirmed the presence of the species in only 3 of the original 6 cave systems, all in Monroe County. The species was not found in any additional caves (Webb *et al.* 1993, Webb 1995). In 1995, 56 specimens were taken from Illinois Caverns, 19 specimens from Fogelpole Cave, and 2 specimens from a third, privately owned cave. The species appears to be extirpated from the two caves where no specimens were collected in 1965 or 1986. Its status in a sixth cave is currently unknown because the cave entrance has been closed by the landowner, thus the cave has not been re-surveyed since 1965. Due to the extensive searches by INHS, it is possible, but unlikely, that there are populations in other caves in the Illinois Sinkhole Plain. The INHS made an intensive effort to collect in all small side rivulets and drip pools in the 25 caves it sampled and believes that the collection results reasonably reflect the relative abundance of the species in cave streams of the Sinkhole Plain (S.J. Taylor, INHS, *in litt.* 1998).

Previous Federal Action

On May 22, 1984, the Service published a notice of review in the **Federal Register** (49 FR 21664) designating the Illinois cave amphipod as a category 2 candidate species. Category 2 was composed of taxa for which the Service had information indicating that threatened or endangered status might be warranted, but for which adequate data on biological vulnerability and threats indicated that listing was possibly appropriate, but for which data were not sufficient to support issuance of listing proposals. The species was again included as a category 2 candidate species in the notice of review published in the **Federal Register** (54 FR 554) on January 6, 1989. On November 21, 1991, the Service published a notice of review in the **Federal Register** (56 FR 58804) designating the species as a category 1 candidate. Category 1 taxa were those for which the Service had substantial biological information on hand to support proposing to list the species as threatened or endangered. The species was again included as a category 1 candidate species in a notice of review published in the **Federal Register** (59 FR 58982) on November 15, 1994. On February 28, 1996, the Service published a notice of review in the **Federal Register** (61 FR 7596) which eliminated the several candidate category designations of previous notices and identified the amphipod as a candidate species with a listing priority of 2. On July 28, 1997, the Service published the proposed rule (62 FR 40319) to list the Illinois cave amphipod as endangered. The Service reopened the public comment period on October 9, 1997, (62 FR 52679) for 60 days at the request of the Illinois Farm Bureau Federation, the St. Clair County

Farm Bureau Federation, the Growmark Corporation, and Congressman Jerry F. Costello, because seasonal agricultural activities may have made it difficult for some interested and potentially affected parties to prepare and submit timely comments on the proposal. That comment period closed on December 8, 1997.

The processing of this final rule conforms with the Service's revised Listing Priority Guidance published in the **Federal Register** (63 FR 25502) on May 8, 1998. The Guidance revised the order in which the Service will process rulemakings during fiscal years 1998 and 1999. The Guidance calls for giving highest priority to handling emergency listings (Tier 1) and second highest priority (Tier 2) to all other listing actions except the designation or revision of critical habitat. Critical habitat designations or revisions are Tier 3 actions. Processing of this final rule falls under Tier 2.

Summary of Comments and Recommendations

In the July 28, 1997, proposed rule and October 9, 1997, notice reopening the comment period, all interested parties were requested to submit factual reports or information that might contribute to the development of a final rule. Appropriate Federal and state agencies, county governments, scientific organizations, agricultural organizations, and other interested parties were contacted and requested to comment. Newspaper notices were published in local and regional newspapers across the range of the species inviting public comment.

The Service received comments from 27 individuals and organizations during the comment periods; some parties provided more than one comment letter. Eight commenters supported the proposal. Twelve parties expressed concern over the possible effect the listing may have on their area of interest (agriculture or cave visitation), and several offered rebuttals to the Service's rationale but did not directly oppose the proposal. Four commenters expressed opposition to the proposal.

Written comments received during the comment periods are addressed in the following summary. Comments of a similar nature are grouped together.

Issue 1: The Federal Government, and hence the Service, does not have the authority to list a species found in only one State, because regulation of such species does not impact upon interstate commerce.

Service Response: A December 5, 1997, decision by the U.S. Court of Appeals for the District of Columbia Circuit, *National Association of Home Builders et al.* v. *Babbitt*, 130 F.3d 1041 (D.C. Cir. 1997), a case challenging protection of the Delhi Sands flower-loving fly under the Act, addressed this issue. The ruling affirms Congress' authority to protect endangered species whose range is limited to a single State. The Court clearly recognized that the extinction of even a single species may have significant effects on the health of an ecosystem and ultimately on the commerce of the nation.

Issue 2: Little information exists on the value of this species to humans.

Service Response: Congress did not make a distinction between those species that are currently known to have some commercial or economic value and those that do not; the Act applies to all species in danger of extinction. Economic or commercial value is not a consideration in a listing decision. However, the Service realizes that it is difficult to describe the need to protect a species that most people will never see and that has no obvious economic, commercial, recreational, or aesthetic value. One of Congress' underlying principles when enacting the Act was that allowing any species to go extinct could result in unforeseeable adverse effects, because we may not know what contribution that species later may be found to have for the good of humans. There are many examples of plant and animal species that have been found useful in the treatment of diseases or in scientific research that provide benefits. Once a species becomes extinct, that potential benefit is lost forever.

From an ecological perspective, an amphipod belongs to a group of species called detritivores that consume dead and decaying organic matter, recycling their nutrients back into the environment. Nutrient recycling is a critically important function in all ecosystems, especially nutrient-poor cave ecosystems. Amphipods can also be considered to be indicator species, that is, species especially sensitive to physical and chemical changes in their habitat, which can tell us when there is something critically wrong in their environment, and ours.

Issue 3: The Service lacks the scientific data to justify listing this species since there has been inadequate sampling conducted: one cave in which the species historically occurred could not even be surveyed.

Service Response: The Service believes that the sampling efforts conducted in 1993 and 1995 were by far the most intensive and extensive to date, and were appropriate to demonstrate the decline in the species' range with a high degree of certainty. In 1995 the INHS sampled 25 caves in the Illinois Sinkhole Plain and found *Gammarus acherondytes* in only 3 caves (Webb *et al.* 1993, Webb 1995). In 1 cave that historically contained *G. acherondytes*, for example, a total of 561 amphipods from other species were collected without collecting any *G. acherondytes*. In a second cave that historically contained the species, 673 amphipods were collected without taking any *G. acherondytes*. If it is present in either of these caves, it would have to be extremely rare, constituting less than 2 individuals per 1000 amphipods sampled. By comparison, *G. acherondytes* appeared in higher numbers in much smaller amphipod samples in Fogelpole Cave (at a rate of more than 50 individuals per 1000 sampled) and Illinois Caverns (at a rate of about 250 individuals per 1000 sampled). If the species is present in significant numbers in the other 2 caves, it should have been readily collected in mainstream samples at the level of sampling intensity that was carried out in the 1993 and 1995 surveys. More intensive collecting, in which thousands of amphipod specimens are taken from each cave for later identification, might be inappropriate and probably unhealthy for the cave community. Such intensive collecting might decimate or extirpate an amphipod species whose numbers already are extremely low. Although survey data cannot unequivocally prove that the species is extirpated from any cave, they demonstrate that the most optimistic scenario is that the species is extremely rare, and its numbers have decreased since the surveys done prior to 1993.

The Service recognizes that the species may still occur in the one cave whose entrance has been closed by the landowner, and we have not made the assumption that it has been extirpated from that location. However, even if it does still occur there, the data indicate that the species' range has decreased from six caves to three or four.

Issue 4: Recent sampling efforts have yielded more specimens than previous efforts, indicating that species numbers may actually be increasing.

Service Response: The Service acknowledges a remote possibility that the species may be found in other cave streams in the sinkhole plain. There is also a chance that it may be found in other locations within Fogelpole Cave and Illinois Caverns. However, the Service believes the sampling effort that was expended looking for this species is more than adequate and reasonably reflects the relative abundance and diminishing distribution of the species in cave streams of the sinkhole plain.

The Service does intend to keep looking for this species in other locations, however.

With regard to estimating the actual population of this species, the Service acknowledges that it is not likely to ever achieve that goal, regardless of the amount of effort put into surveys. The nature of this species and its habitat make it difficult, at best, to survey for it. Furthermore, the current identification technique for the species requires that it be sacrificed. It would be counter productive to sacrifice substantial numbers of an extremely rare species in order to obtain a more precise population estimate.

However, obtaining an accurate estimate of species numbers is not necessary for the Service to determine that the species warrants protection under the Act. What must be demonstrated is that its range has been significantly reduced and the threats to the species continue and can reasonably be expected to result in a further decline. An accurate population estimate also is not necessary to establish and achieve recovery goals for the species. Recovery can be achieved by protecting the quality of its habitat and by restoring stable and viable populations to the caves from which it has been extirpated. Once listed, the amphipod's relative abundance and population trend will be monitored safely using standard scientific methods.

Issue 5: The data do not conclusively show that agricultural chemicals are a threat to the species. Test data from the Monroe-Randolph Bi-County Health Department do not support the conclusion that groundwater is polluted. Contamination from pesticides is currently within acceptable limits and is likely to decline as agricultural Best Management Practices are implemented in the area.

Service Response: The Service agrees that more research needs to be done to further define the relative importance of agricultural chemicals as a threat to the species as compared to septic systems, livestock wastes, and the application of residential pesticides and fertilizers. However, the Service believes that all these sources contribute to the problem of groundwater degradation in the Sinkhole Plain. Research by Panno *et al.* (1996) as well as data obtained from the Monroe-Randolph Bi-County Health Department (ibid.), which tests drinking water supplies for nitrates and bacterial contamination, clearly demonstrate that groundwater degradation in the sinkhole plain is human-caused. In addition, pesticide levels may be within acceptable limits during most of the year, however, it has been demonstrated that peak levels during spring and summer rainstorm events are much higher and may be lethal to the species.

One of the Service's peer reviewers of the proposed rule suggested that the primary threats to the species is a reduction in dissolved oxygen content of the stream which, at times, may fall below life-sustaining levels. To a limited extent, this is a natural phenomenon which occurs during a rainstorm event, and cave stream fauna can survive these short-term depressions provided the dissolved oxygen content does not reach lethal levels. However, as a result of human activities water now runs off the land more rapidly causing a greater depression of ambient dissolved oxygen in the cave stream and providing for dissolved oxygen content to reach lethal levels faster.

Agricultural chemicals can be lethal at certain concentrations, have chronic effects such as inhibiting reproduction, or leave the amphipod in a weakened condition and less able to cope with short-term depressions of dissolved oxygen (Thomas Aley, Ozark Underground Laboratory, *in litt.* 1997). Water sample analyses from springs, wells, and cave streams in the vicinity of these six caves, including one with the species still extant (Fogelpole), have found alachlor and atrazine, the latter at levels approaching those known to cause reproductive impairment in another amphipod species (Panno *et al.* 1996). DDE and dieldrin also were detected in invertebrate samples from Fogelpole Cave. There are also high levels of fecal coliform and enterococcus bacteria present; bacterial species which suggest both human and livestock sources.

The Service, in conjunction with the Illinois Department of Conservation, is funding a cave recharge study to delineate the areal extent of the watersheds of the three caves in which the species is found. This crucial first step will enable the Service to evaluate the land uses in the watersheds, determine the relative extent and nature of contaminant inputs to the groundwater, and identify the primary locations of these inputs. Furthermore, additional water quality testing and tissue analyses will be conducted to determine the levels at which contaminants cause mortality and/or changes in critical biological functions such as reproduction. With these data, the Service will be better able to address the threats to the species and to propose solutions in a recovery plan.

Issue 6: Urbanization and septic waste may be a greater threat than agriculture. The application of pesticides on residential properties was proposed for exemption from the takings provisions of section 9 of the Act, but such applications are not as well regulated or monitored as agricultural applications and may, therefore, have a more significant impact on the amphipod.

Service Response: Due to inadequate data on the impacts of residential property pesticide use, and in response to public comments, the Service has modified the listing of activities that may potentially result in a violation of section 9 of the Act (see Available Conservation Measures section).

Issue 7: The species' decline may be due to natural causes.

Service Response: The Service acknowledges that there may be natural causes, such as severe weather or changing climatic conditions, contributing to the decline and extinction of any species. However, other likely causes were identified during the status assessment for this species. There is evidence that the deterioration of groundwater quality in the area coincides with an increase in residential development. There is further evidence that certain agricultural chemicals such as atrazine, which cause mortality in related amphipod species, are at or near lethal levels in the groundwater during certain periods. These factors indicate a human component to the decline of the species which is not a natural or cyclical phenomenon.

Issue 8: Metal ions found in amphipod tissue are not evidence of harm.

Service Response: The Service concurs with this statement. However, since several metal ions have been detected in amphipod tissues, the potential exists for acute or chronic effects to the species. The Service acknowledges that additional research is required to determine the nature and extent of any threat to the species that may be caused by metal ions in their environment.

Issue 9: Listing the amphipod will shut down farming in the area.

Service Response: The Service has no intention of halting farming in the Sinkhole Plain. We expect that any detrimental impacts on the amphipod due to agriculture can be reduced to a large extent through modest and localized land treatments, such as maintaining buffer strips around sinkholes, ensuring that chemicals are not dumped or spilled into sinkholes, and ensuring that livestock wastes do not leak or are not diverted into sinkholes. The Service will work with the Natural Resources Conservation

Service (NRCS), local agricultural representatives, and landowners to develop voluntary Conservation Agreements to implement Best Management Practices designed to protect surface and ground water quality. A similar approach will be applied to residential developments which might otherwise allow septic waste to be directed into sinkholes. The Service will work with developers, local planning and zoning boards, and health departments to develop alternatives to such practices.

Issue 10: Programs are currently in place which will reduce the threat of contaminants to the amphipod.

Service Response: The Service agrees that there are programs in place to reduce the threat of contaminants to the amphipod. However, many of these programs are voluntary, and the results of their implementation have been inadequately monitored and evaluated. Our hope is to expand, monitor, and improve upon existing programs to ensure a higher degree of participation and success.

Issue 11: Listing the species may limit the visitation of caves by the public.

Service Response: The proposed rule identified human use and visitation of caves as a potential threat to the species. However, whether this threat is significant depends on the level of use and the nature of the visitations. The Service will work with caving organizations such as the Illinois Speleological Society, as well as the Illinois Department of Natural Resources (DNR), to investigate the significance of cave visitation as a threat to the species and to develop measures to minimize any such threat. If cave visitation is found to be a significant threat to the survival and recovery of the amphipod, we will seek mutually acceptable measures to protect the species while minimizing any impact on cave visitation. We recognize the importance of caves such as Fogelpole and Illinois Caverns to the speleological community and have no intention of limiting cave visitation unless such limitations are necessary for the species' survival and recovery.

Peer Review

In accordance with policy promulgated July 1, 1994 (59 FR 34270), the Service solicited the expert opinions of independent specialists regarding pertinent scientific or commercial data relating to the supportive biological and ecological information for species under consideration for listing. The purpose of such review is to ensure listing decisions are based on scientifically sound data, assumptions, and analyses, including input of appropriate experts and specialists.

Following the publication of the listing proposal, the Service solicited the comments of two biologists having recognized expertise in invertebrate zoology and one individual having recognized expertise in karst hydrology and underground environments and requested their review of the available data concerning the Illinois cave amphipod. In order to ensure an unbiased examination of the data, the Service selected individuals who had only minor or no involvement in previous discussions on the possible listing of the species.

Comments were received from all three peer reviewers within the comment period. The two biological reviewers concurred with the Service on factors relating to the taxonomic, biological, and ecological information and concurred with the proposal to list the Illinois cave amphipod as an endangered species. The karst hydrologist provided additional clarification of the importance of oxygen depletion as the primary mechanism by which the species is being harmed. That reviewer also concurred that the Illinois cave amphipod is in danger of extinction in the foreseeable future.

Summary of Factors Affecting the Species

Section 4 of the Act and regulations (50 CFR part 424) promulgated to implement the listing provisions of the Act set forth the procedures for adding species to the Federal lists. A species may be determined to be threatened or endangered due to one or more of the five factors described in section 4(a)(1). These factors and their application to the Illinois cave amphipod (*Gammarus acherondytes*) of are as follows:

A. The Present or Threatened Destruction, Modification, or Curtailment of Its Habitat or Range

The degradation of habitat through the contamination of groundwater is believed to be the primary threat to the Illinois cave amphipod. Karst terrain, where this amphipod is found, is a geologic land formation typified by sinkholes and fissures that provide direct and rapid conduits for water and water-borne material from the surface to the groundwater, thereby avoiding the filtering and cleansing mechanisms normally provided by overlying soils. Water movement from the land surface to the water table in karst terrain often is nearly instantaneous, and flood pulses following a rainstorm may cause levels of contaminants to become transiently higher (Libra *et al.* 1986), up to 10,000 times higher than before the event (Quinlan and Alexander 1987).

There are several sources of groundwater contamination affecting the amphipod's habitat: (1) the application of agricultural chemicals, evidence of which has been found in spring and well water samples in Monroe County (Panno *et al.* 1996); (2) bacterial contamination from human and animal wastes, which finds its way to subsurface water via septic systems, the direct discharge of sewage waste into sinkholes, or from livestock feedlots (Panno *et al.* 1996); (3) the application of residential pesticides and fertilizers; and (4) the accidental or intentional dumping of a toxic substance into a sinkhole.

The primary mechanism threatening the species is believed to be a reduction in the dissolved oxygen content of underground cave streams which, at times, may fall below life-sustaining levels. To a certain extent, this is a natural phenomenon which occurs during a rainstorm event. Stormwater runoff is typically low in dissolved oxygen, and when it enters the groundwater, it depresses the ambient dissolved oxygen level in the cave stream. Under natural conditions, cave stream fauna can survive these short term, probably rare, depressions which may reach lethal levels.

However, human activities on the land surface have resulted in changes to this natural condition that make lethal levels of depressed ambient dissolved oxygen more common. With agricultural, residential, and municipal development, stormwater now runs off the land more rapidly, reducing the time in which it reaches underground streams. Because of this more rapid runoff, the ambient dissolved oxygen in the cave stream will be depressed to a greater degree and can reach lethal levels faster. Furthermore, pesticides typically bind to soil particles; with the loss of vegetated buffers around sinkholes and fissures, more soil particles erode from the land surface and enter the groundwater carrying more pesticides with them. In addition, nitrogen-based fertilizers and organic wastes increase the demand for dissolved oxygen to accomplish biochemical breakdown. These factors exacerbate the natural depression of dissolved oxygen levels. Furthermore, agricultural chemicals may either be lethal in themselves at certain concentrations, have chronic effects such as inhibiting reproduction, or can leave the amphipod in a weakened condition and less able to cope with short term depressions of dissolved oxygen.

The most commonly used herbicides (and their proprietary names) in Monroe County are atrazine, alachlor (Lasso), cyanazine (Bladex), metolachlor (Dual), glyphosate (Roundup), 2,4-D, imazaquin (Scepter), imazethapyr (Pursuit), and pendimethalin (Prowl) (Omar Koester, University of Illinois Extension Service, *in litt.* 1996). The Illinois State Geological Survey analyzed water samples from 9 springs, 1 cave stream, and 33 wells in Monroe County for bacteria and pesticides to determine if contamination is occurring (Panno *et al.* 1996). The agricultural herbicides atrazine and/or alachlor were detected in 83 percent of groundwater samples taken from springs in the study area. The levels of these herbicides in samples often exceeded the U.S. EPA Maximum Contaminant Levels of 2.0 parts per billion (ppb) and 3.0 ppb, respectively, during and following spring rainfalls. They reported maximum atrazine levels in spring samples as high as 98 ppb with the maximum level in Illinois Caverns being 1.38 ppb (Panno *et al.* 1996). Macek *et al.* (1976) observed acute toxicity to the amphipod *Gammarus fasciatus* from a 48-hour exposure to the herbicide atrazine at 2.4 parts per million (ppm). In addition, they reported reproductive effects and impaired survival of offspring from concentrations as low as 0.14 ppm of atrazine during chronic tests lasting 30,119 days (Macek *et al.* 1976).

The most commonly used insecticides in the region include carbaryl, carbofuran, chlorpyrifos, malathion, permethrin, methyl parathion, and phosmet. Mayer and Ellersieck (1986) reported that Gammaridae were most sensitive to the five insecticides carbaryl, DDT (dichloro-diphenyl-trichloroethane), endrin, malathion, and methoxychlor and postulated that pesticide pulses characteristic of karst springs could have major impacts on biota such as amphipods. Webb *et al.* (1993) analyzed amphipod and isopod tissue samples from numerous caves, including the three caves known to contain the amphipod, for pesticides and PCB's (polychlorinated biphenyls). DDE (dichlorodiphenyl-dichloroethylene) and DDD (1,1-dichloro,-2,2-bis(p-chloro-phenyl) ethane) (breakdown products of DDT) were detected in isopods from Fogelpole Cave, reflecting the historical use of the insecticide DDT in the drainage basin. In addition, dieldrin, the persistent breakdown product of the insecticide aldrin, was detected in invertebrate samples from Fogelpole Cave. Both DDT and aldrin have been banned from use in the United States since 1973 and 1974, respectively. These data demonstrate some of the long term detrimental effects that agricultural chemicals can have on cave ecosystems. Interestingly, neither DDD, DDE, nor dieldrin were detected in water samples from Fogelpole Cave, supporting the premise that cave invertebrates accumulate and concentrate these toxins even though they do not exist at detectable levels in the cave water: cave invertebrates, therefore, serve as indicators of past and present contamination.

Research by Panno *et al.* (1996) as well as data from the Monroe-Randolph Bi-County Health Department (ibid.), which tests drinking water supplies for nitrates, clearly demonstrate that groundwater in the Sinkhole Plain contains anomalously large concentrations of nitrate (NO_3^-). Levels above 1.4 mg/L are assumed to be human-caused, and the main sources of nitrates are agricultural fertilizers, septic systems, and livestock wastes. Panno *et al.* (1996) found that the greatest range of nitrate concentrations in water samples from springs occurred around the time of spring planting, but it was concluded that nitrates in the shallow karst aquifer came from multiple sources.

Webb *et al.* (1993) also found detectable quantities of bromide, fluoride, sulfate, and nitrate in Illinois Caverns and Fogelpole Cave. In addition, they found detectable concentrations of calcium, sodium, magnesium, iron, manganese, silicon, and barium in water samples from Fogelpole Cave, and these plus aluminum, potassium, and phosphorus in Illinois Caverns. In amphipod tissue samples from Fogelpole Cave, they reported detectable concentrations of aluminum, boron, barium, calcium, chromium, copper, iron, potassium, magnesium, manganese, sodium, phosphorus, and zinc (Webb *et al.* 1993). The six highest ranked metals detected in amphipod samples were also the six highest ranked metals detected in water samples, indicating an apparent relationship between the concentrations of these metals in tissue and water. The acute and chronic effects of these ions on the Illinois cave amphipod are currently unknown, but their presence in amphipod tissues and the water samples provides evidence of potential harm.

In addition to chemical contamination, Panno *et al.* (1996) report that all springs and cave streams they sampled, as well as 29 of 33 wells, contained concentrations of coliform, fecal coliform, enterococcus, and numerous other bacterial species that exceeded Federal drinking water standards. The bacterial species present strongly suggest contamination from both human and livestock sources. Prior to 1988, private and aeration-type septic systems were allowed to discharge directly into sinkholes, and most of those systems are still in existence. Although the practice was prohibited in 1987, exceptions are still granted in the study area (Panno *et al.* 1996).

In his studies, Poulson (1991) concluded that bacterial pollution from human and livestock wastes has varying degrees of impact on cave biota. At high levels of contamination, a high biochemical oxygen demand (BOD) kills all macroscopic organisms and leaves only strands of colonial sewage bacteria and associated protozoa. If the BOD is high but does not completely remove oxygen, then tubificid sewage worms become part of the faunal community. If the amount of wastes is not too great, as with the diffuse input from septic fields, the sewage fauna is only minimally developed, but the increased organic food supply favors survival and reproduction of shorter-lived non-cave-dependent macrofauna which may replace cave-dependent species. If the input of waste decreases later, chironomid midges and other non-cave-dependent species survive but can no longer reproduce, while the reproduction of short-lived cave-dependent isopods and flatworms is stimulated. At still lower impact levels, the reproduction of larger cave-dependent species, like crayfish, may also be stimulated.

The effects of bacterial contamination on the Illinois cave amphipod have not been studied. However, bacterial contamination is evidence of water quality degradation and could pose a threat to the species. Monroe County is within commuting distance of the St. Louis, Missouri, metropolitan area and is rapidly undergoing residential development. In fact, the increase in bacterial contamination of well water in the county coincided with the onset of accelerated development about 1987 (Poulson 1991). It is likely that the increase in bacterial contamination was the result of the installation of private septic systems in areas with soils of limited waste assimilation capacity and inadequate thickness, and the installation of systems that discharge septic effluent directly into sinkholes (Joan Bade, Monroe-Randolph Bi-County Health Department, Waterloo, IL., pers. comm. 1996).

The toxicity of contaminants to cave-dwelling species may be quite different than the response of their surface-

dwelling relatives, making the results of chemical analysis difficult to interpret. Due to their adaptations to a narrow range of environmental conditions, obligate cave species may be hypersensitive to chemical changes in ways that are not detectable by standard toxicity tests (Poulson 1991). Contaminants known to be toxic to amphipods and other crustaceans have been shown to be present and increasing in cave streams in the local area. While direct mortality cannot be conclusively attributed to such agricultural chemicals as atrazine, carbaryl, DDT, or malathion, or to bacterial contamination, the presence of such contaminants in the amphipod's environment constitutes strong circumstantial evidence that the deterioration of water quality is the primary cause of the decrease in the species' range and the number of extant populations.

Human utilization of cave environments is a potential threat to this species. The accidental or intentional introduction of materials toxic to this species and habitat disturbance are potential hazards to the species during public visits to caves. None of the caves occupied by the amphipod have improved pedestrian walkways, and visitors must pass through the cave streams to access deeper passages. Such activities can physically disturb cave stream habitat, but the subsequent impact on the amphipod is unknown. Cave ecosystems are considered to be delicate.

The State of Illinois owns the main entrances to Illinois Caverns and Fogelpole Cave and manages them as satellites of the Kaskaskia River State Fish and Wildlife Area. The State allows a maximum of 25 individuals at a time to enter Illinois Caverns unsupervised, provided they obtain a permit and agree to conditions that prohibit littering or removal of biological materials. The Caverns are staffed during business hours by an on-site attendant. The main entrance to Fogelpole Cave, a dedicated Nature Preserve, is gated. The State does not allow any visitation of this cave except by permit for scientific purposes. Three privately owned entrances to a third cave containing the amphipod have also been dedicated as Illinois Nature Preserves. Such dedication implements landowner agreements to preserve and maintain existing conditions at these sites.

B. Overutilization for Commercial, Recreational, Scientific, or Educational Purposes

Overexploitation or scientific collecting are not believed to be factors affecting the species' continued existence at this time, but the Federal listing will prohibit unauthorized collection of individuals of the species. Exact numbers are unknown, but at a minimum 139 specimens have been collected from 6 caves over a 55-year period. Protection from collection may become important because collectors may seek the species once it becomes listed.

C. Disease or Predation

The importance of these factors is presently unknown.

D. The Inadequacy of Existing Regulatory Mechanisms

This species currently has no protection under Federal law. The Federal Cave Resources Protection Act of 1988 (16 U.S.C. 4301–4309; 102 Stat. 4546) seeks to secure, protect, and preserve significant caves on Federal lands for the perpetual use, enjoyment, and benefit of all people. However, at this time, the Cave Resources Protection Act provides no protection to any caves containing, or potentially containing, Illinois cave amphipods, because none of the caves are on or under Federal land or are located in the immediate vicinity of Federal ownership. Therefore, these caves are ineligible for Federal protection under the Cave Resources Protection Act.

The Illinois cave amphipod is listed as an endangered species under the Illinois Endangered Species Protection Act. As such, it is protected from direct taking (i.e., injury or mortality) regardless of whether it is on public or private land. However, ''take'' under State law does not include indirect harm through such mechanisms as habitat alteration. As long as the actions of private landowners are otherwise in compliance with the law, actions which destroy or degrade habitat for this species are allowed under Illinois law.

State law requires consideration of this species during the planning processes of State agencies and local units of government which must consult with the Illinois DNR on the impacts of their proposed actions. The DNR will provide recommendations on how the impacts to the species can be avoided or minimized. The unit of government may accept or reject any or all recommendations (Illinois Administrative Code).

As mentioned under Factor A of this section, several of the entrances to caves containing the species are dedicated as Illinois Nature Preserves which is the strongest land protection mechanism in Illinois. Such dedication restricts future uses of the land, in perpetuity, for the purpose of preserving the site in its natural state. The removal of biota from the site is prohibited except by permit and for scientific purposes only. Allowable uses of the site are limited to nonconsumptive, nondestructive activities. The landowner may decide whether to allow public access to the site, and management is accomplished in accordance with a master management plan prepared jointly by the Illinois Nature Preserves Commission and the landowner. Dedicated properties cannot be subdivided, and the dedication instrument is attached to the deed and recorded.

Ownership or protection of cave entrances does not necessarily ensure protection of the caves' environment, particularly water quality. Water quality is largely a function of land use in the cave stream recharge areas on the land surface, and the vast majority of the watersheds of all caves containing the amphipod is in private ownership, and land use is primarily agriculture. Recharge areas may be several square miles in size, and runoff and seepage from thousands of acres of agricultural land may be funneled into one cave system, thus increasing the magnitude of any toxic hazard posed by the use of agricultural chemicals. The application of pesticides is regulated by the U.S. Environmental Protection Agency (EPA), and maximum allowable application levels and use restrictions are printed on pesticide container labels. While pesticides may be applied fully in compliance with the restrictions, adverse impacts to the species may still result in karst systems.

Current State and local regulations are inadequate for protecting water quality in a sensitive geological formation like karst. St. Clair and Monroe counties are rapidly developing as residential communities for the St. Louis, Missouri, Metropolitan Area with most home sites being served by individual wells and septic systems. Septic systems may not perform as designed, and, in some cases, septic effluent drains directly into sinkholes. Studies have shown that there is no general housing density zoning in karst terrain that assures that groundwater quality will be protected when septic systems are used. The more houses there are in a spring or cave stream recharge area, the greater the chance that some of them will introduce contaminants into the groundwater system, and the greater the chance that one or more of the septic field systems will constitute a major source of groundwater contamination (Aley and Thompson 1984).

E. Other Natural or Manmade Factors Affecting Its Continued Existence

Because of the low numbers of the Illinois cave amphipod and a highly restricted range, even the loss of a few individuals to natural events may be significant to the species' survival. As a group, aquatic amphipods have adapted to the extremes of natural events such as spring floods or high water discharges following rainstorms and, no doubt, some individuals are washed out of the cave environment during such events. Because the species is extant in only three or four cave systems within a relatively small geographic area, it is conceivable that a heavy spring snowmelt or rainstorm could cause a flushing of all systems at one time significantly affecting each population.

The risk of extinction due to the threats to the Illinois cave amphipod (*Gammarus acherondytes*) posed by the above factors is exacerbated by the small number of low density populations that remain. Although *Gammarus acherondytes* was always rare, the current population densities are likely much lower (due to the previously identified threats) than historical levels. Despite any adaptations to conditions which result in rarity, habitat loss and degradation increase a species' vulnerability to extinction. Environmental variation, whether random or predictable, naturally causes fluctuations in populations. However, populations with small numbers are more likely to fluctuate below the minimum viable population (i.e., the minimum number of individuals needed for a population to survive). If population levels stay below this minimum size, an inevitable, and often irreversible, slide toward extinction will occur. Small populations are also more susceptible to inbreeding depression and genetic drift. Populations subjected to either of these problems usually have low genetic diversity, which reduces fertility and survivorship. Lastly, chance variation in age and sex ratios can affect birth and death rates. Changes to demographics may lead to death rates exceeding the birth rates, and when this occurs in small populations there is a higher risk of extinction.

The Service has carefully assessed the best scientific and commercial information available regarding the past, present, and future threats faced by this species in determining to make this rule final. Based on this evaluation, the preferred action is to list the Illinois cave amphipod as endangered.

Critical Habitat

Critical habitat is defined in section 3 of the Act as: (i) the specific areas within the geographical area occupied by a species, at the time it is listed in accordance with the Act, on which are found those physical or biological features (I) essential to the conservation of the species and (II) that may require special management considerations or protection; and (ii) specific areas outside the geographical area occupied by a species at the time it is listed, upon a determination that such areas are essential for the conservation of the species. ''Conservation'' means the use of all methods and procedures needed to bring the species to the point at which listing under the Act is no longer necessary.

Section 4(a)(3) of the Act, as amended, and implementing regulations (50 CFR 424.12) require that, to the maximum extent prudent and determinable, the Secretary designate critical habitat at the time the species is determined to be endangered or threatened. Service regulations (50 CFR 424.12(a)(1)) state that designation of critical habitat is not prudent when one or both of the following situations exist—(1) the species is threatened by taking or other human activity, and identification of critical habitat can be expected to increase the degree of threat to the species, or (2) such designation of critical habitat would not be beneficial to the species. The Service finds that designation of critical habitat is not prudent for the Illinois cave amphipod.

Critical habitat receives consideration under section 7 of the Act with regard to actions carried out, authorized, or funded by a Federal agency (see Available Conservation Measures section). As such, designation of critical habitat may affect activities on Federal lands and may affect activities on non-Federal lands where such a Federal nexus exists. Under section 7 of the Act, Federal agencies are required to ensure that their actions do not jeopardize the continued existence of a species or result in destruction or adverse modification of critical habitat. However, both jeopardizing the continued existence of a species and adverse modification of critical habitat have similar standards and thus similar thresholds for violation of section 7 of the Act. In fact, biological opinions that conclude that a Federal agency action is likely to adversely modify critical habitat but not jeopardize the species for which the critical habitat has been designated are extremely rare.

Consultation is likely to occur with the NRCS and with the U.S. EPA for programs administered by those agencies. For a species extant in only three or four small, discrete populations, any significant adverse impact to its habitat would likely jeopardize the species' continued existence. Therefore, for this species the threshold for a jeopardy determination is indistinguishable from the threshold for determining adverse modification of critical habitat. For these reasons, the designation of critical habitat for the Illinois cave amphipod would provide no additional benefit to the species beyond that conferred by listing, and therefore, such designation is not prudent.

The nature of karst terrain means that surface features such as sinkholes, fissures, and disappearing streams provide direct surface connections to the cave streams inhabited by the amphipod. Publishing a critical habitat map would delineate the recharge areas of these caves. The Service believes such a map would make it easy to locate the surface connections to the cave streams and could promote vandalism in the form of intentional introduction of toxic chemicals into the underground system. Although vandalism has not been documented as a past threat to the Illinois cave amphipod, listing it as an endangered species publicizes the present vulnerability of this species, and thus can be reasonably expected to increase the threat of vandalism or intentional destruction of the species' habitat. In light of the vulnerability of this species to vandalism or the intentional destruction of its habitat, publication of descriptions of habitat features and maps providing its precise locations within areas of accelerating development, as required for the designation of critical habitat, would reasonably be expected to increase the degree of threats to the species, increase the difficulties of enforcement, and further contribute to the decline of the Illinois cave amphipod. Designation of critical habitat for the Illinois cave amphipod would, therefore, provide no benefit to the species apart from the protection afforded by listing the plant as threatened.

Protection of the habitat of the Illinois cave amphipod will be addressed through the section 4 recovery process and the section 7 consultation process. Although this amphipod occurs only on private and State land, it may be affected by projects with Federal connections. The Service believes that activities involving a Federal action which may affect the Illinois cave amphipod can be identified without designating critical habitat, by providing Federal agencies with information on

the location of occupied habitat and recharge areas and information on the kinds of activities which could affect the species. For the reasons discussed above, the Service finds that the designation of critical habitat for Illinois cave amphipod is not prudent.

Available Conservation Measures

Conservation measures provided to species listed as endangered or threatened under the Act include recognition, recovery actions, requirements for Federal protection, and prohibitions against certain practices. Recognition through listing results in public awareness and conservation actions by Federal, State, and local agencies, private organizations, and individuals. The Act provides for possible land acquisition and cooperation with the States and requires that recovery actions be carried out for all listed species. The protection required of Federal agencies and the prohibitions against taking and harm are discussed, in part, below.

Section 7(a) of the Act requires Federal agencies to evaluate their actions with respect to any species that is proposed or listed as endangered or threatened, and with respect to its critical habitat, if any is being designated. Regulations implementing this interagency cooperation provision of the Act are codified at 50 CFR part 402. Section 7(a)(2) requires Federal agencies to confer informally with the Service on any action that is likely to jeopardize the continued existence of a proposed species or result in destruction or adverse modification of proposed critical habitat. If a species is subsequently listed, section 7(a)(2) requires Federal agencies to ensure activities they authorize, fund, or carry out are not likely to jeopardize the continued existence of such a species or to modify its critical habitat. If a Federal agency action may affect a listed species or its critical habitat, the responsible Federal agency must enter into consultation with the Service.

Federal agency actions that may require consultation as described in the preceding paragraph include activities by the NRCS such as the Conservation Reserve Program, the Environmental Quality Incentive Program, and the Highly Erodible Land and Wetland Conservation provisions of the Food Security Act of 1985. These activities are expected to generally benefit the species through the protection of groundwater quality. In addition, consultation may be required with the U.S. EPA on the use of pesticides in the watersheds of the species' range.

The Act and implementing regulations found at 50 CFR 17.21 set forth a series of general prohibitions and exceptions that apply to all listed wildlife. The prohibitions, as codified at 50 CFR 17.21, in part, make it illegal for any person subject to the jurisdiction of the United States to take (including harass, harm, pursue, hunt, shoot, wound, kill, trap, or collect; or to attempt any of these), import or export, ship in interstate commerce in the course of commercial activity, or sell or offer for sale in interstate or foreign commerce, any listed species. It also is illegal to possess, sell, deliver, carry, transport, or ship any such wildlife that has been taken illegally. Certain exceptions apply to agents of the Service and State conservation agencies.

Permits may be issued to carry out otherwise prohibited activities involving endangered wildlife under certain circumstances. Regulations governing permits are at 50 CFR 17.22, 17.23, and 17.32. For endangered species, such permits are available for scientific purposes, to enhance the propagation or survival of the species, or for incidental take in connection with otherwise lawful activities.

It is the policy of the Service, published in the **Federal Register** on July 1, 1994 (59 FR 34272), to identify to the maximum extent practicable at the time a species is listed, those activities that would or would not constitute a violation of section 9 of the Act. The intent of this policy is to increase public awareness of the effect of the listing on proposed and ongoing activities within a species' range. The Service believes that, based upon the best available information, the following actions will not result in a violation of section 9, provided these activities are carried out in accordance with existing regulations and permit requirements:

(1) Construction and use of properly constructed and properly functioning sewer systems within the species' range.

(2) Visitation of Fogelpole Cave by permitted individuals.

(3) Agricultural activities outside of the recharge areas for caves known to contain Illinois cave amphipod.

(4) Agricultural activities within the known recharge area of caves known to contain the Illinois cave amphipod if such activities incorporate Service-approved practices designed to protect surface and ground water quality. Such practices will include buffer strips around sinkholes and losing streams, diversion of animal wastes away from sinkholes and losing streams, and avoidance of agricultural chemical spills or disposal into sinkholes.

Activities that the Service believes could potentially result in section 9 violation include, but are not limited to:

(1) Use, application, or discharge of agricultural and residential chemicals, or other pollutants, particularly insecticides, onto plants, soil, ground, water, or other surfaces within the recharge areas of the species' range when conducted in violation of label directions, or following Service notification that such use, application, or discharge is likely to result in deterioration of cave water quality and harm to the species. Buffer zones, indicating areas within the recharge areas requiring special precautions for the Illinois cave amphipod, will be identified by the Service; maps of these buffer zones will be provided to the appropriate landowners and government officials.

(2) Discharging of agricultural and residential chemicals or other pollutants including debris, garbage, trash, septic effluent, animal waste, or any other foreign material into sinkholes or fissures in the recharge areas of the species' range.

(3) Construction of new private septic systems or any identified use of improperly functioning existing private septic systems in the recharge areas of the species' range, following Service notification that such construction or use is likely to cause significant water quality degradation and harm the species. The Service will provide a reasonable period of time to correct or mitigate such system deficiencies.

(4) Impoundment, water diversion, draining, ditching, or discharging of fill material in wetlands, sinkhole lakes and ponds, sinkholes, fissures, and human-caused reduction or loss of streams within recharge areas of the species' range if such activities significantly adversely affect the supply or quality of water in the cave streams wherein the species is found and result in take or harm to the species.

(5) Visitation or use of Illinois Caverns and other caves identified as containing this species following Service notification that such visitation or use is likely to cause the significant habitat degradation and/or harm to the species.

Questions regarding whether specific activities may constitute a violation of section 9 should be directed to the Field Supervisor, Rock Island Field Office (see **ADDRESSES** section). Requests for copies of the regulations regarding listed species and inquiries about prohibitions and permits may be addressed to U.S. Fish and Wildlife Service, Division of Endangered Species, Whipple Federal Building, 1 Federal Drive, Ft. Snelling,

Minnesota 55111–4056 (telephone 612/713–5350; facsimile 612/713–5292).

National Environmental Policy Act

The Service has determined that Environmental Assessments and Environmental Impact Statements, as defined under the authority of the National Environmental Policy Act of 1969, need not be prepared in connection with regulations adopted pursuant to Section 4(a) of the Act. A notice outlining the Service's reasons for this determination was published in the **Federal Register** on October 25, 1983 (48 FR 49244).

Paperwork Reduction Act

This rule does not contain any information collection requirements for which the Office of Management and Budget (OMB) approval under the Paperwork Reduction Act, 44 U.S.C. 3501 *et seq.* is required. An information collection related to the rule pertaining to permits for endangered and threatened species has OMB approval and is assigned clearance number 1018–0094. This rule does not alter that information collection requirement. For additional information concerning permits and associated requirements for threatened species, see 50 CFR 17.32.

References Cited

Aley, Thomas and K.C. Thomson. 1984. Septic fields and the protection of groundwater quality in Greene County, Missouri. Ozark Underground Laboratory. Springfield, MO. Pages 31–46.

Holsinger, John R. 1972. The freshwater amphipod crustaceans (Gammaridae) of North America. *In:* U.S. Envir. Protect. Agency Identification Manual No. 5., pages 17–27. Washington, D.C.

Hubricht, Leslie and J.G. Mackin. 1940. Descriptions of nine new species of fresh-water amphipod crustaceans with notes and new localities for other species. *In:* The Am. Midl. Nat. 23:192–193, and Fig. 2.

Illinois Administrative Code, Part 17, Section 1075.

Libra, R.D., G.R. Hallberg, B.E. Hoyer, and L.G. Johnson. 1986. Agricultural impacts on ground water quality: The Big Spring basin study, Iowa—agricultural impacts on ground water (Omaha, NE). Pages 253–273. *In:* Proceedings, National Water Well Association, Dublin, OH.

Macek, K.J., K.S. Buxton, S. Sauter, S. Gnilka, and J.W. Dean. 1976. Chronic toxicity of atrazine to selected aquatic invertebrates and fishes. EPA–600/3–76–047. Environmental Research Laboratory, U.S. Envir. Protect. Agency, Duluth, MN. Reported in: Pesticide background statements, Vol. 1 Herbicides. U.S. Forest Service. 1984. Agricl. Handbook #633. Washington, D.C.

Mayer, Foster L. Jr. and M.R. Ellersieck. 1986. Manual of acute toxicity: interpretation and data base for 410 chemicals and 66 species of freshwater animals. U.S. Dept. of the Int., Fish and Wildlife Service. Washington, D.C. 506 pp.

Panno, S.V., I.G. Krapac, C.P. Weibel, and J.D. Bade. 1996. Groundwater contamination in karst terrain of southwestern Illinois. Illinois State Geological Survey Environmental Geology Series Report 151. Champaign, IL. 43 pp.

Poulson, T.L. 1991. Assessing groundwater quality in caves using indices of biological integrity. Pages 495–511. *In:* Proceedings of the Third Conference on Hydrology, Ecology, Monitoring and Management of Groundwater in Karst Terrains. December, 1991. Nashville, TN.

Quinlan, J.F. and E.C. Alexander. 1987. How often should samples be taken at relevant locations for reliable monitoring of pollutants from an agricultural, waste disposal, or spill site in a karst terrain? A first approximation. Pages 277–286. *In:* B.F. Beck and W.L. Wilson (eds.) Karst Hydro-geology: Engineering and Environmental Applications. Proceedings of the Second Multidisciplinary Conference on Sinkholes and the Environmental Impacts of Karst, Orlando, FL. 429 pp.

Webb, D.W., S.J. Taylor, and J.K. Krejca. 1993. The biological resources of Illinois caves and other subterranean environments. Technical Report 1993(8), Center for Biodiversity, Illinois Natural History Survey, Champaign, IL.

Webb, D.W. 1995. Status report on the cave amphipod *Gammarus acherondytes* Hubricht and Mackin (Crustacea: Amphipoda) in Illinois. Technical Report 1995 (22). Illinois Natural History Survey Center for Biodiversity, Champaign, IL. 22 pp.

Author: The primary author of this final rule is Gerald Bade, Rock Island Field Office (see **ADDRESSES** section).

List of Subjects in 50 CFR Part 17

Endangered and threatened species, Exports, Imports, Reporting and recordkeeping requirements, Transportation.

Regulation Promulgation

Accordingly the Service amends part 17, subchapter B of chapter I, title 50 of the Code of Federal Regulation, as set forth below:

PART 17—[AMENDED]

1. The authority citation for part 17 continues to read as follows:

Authority: 16 U.S.C. 1361–1407; 16 U.S.C. 1531–1544; 16 U.S.C. 4201–4245; Pub. L. 99–625, 100 Stat. 3500; unless otherwise noted.

2. Section 17.11(h) is amended by adding the following, in alphabetical order under CRUSTACEANS to the list of Endangered and Threatened Wildlife:

§ 17.11 Endangered and threatened wildlife.

* * * * *

(h) * * *

Species		Historic range	Vertebrate population where endangered or threatened	Status	When listed	Critical habitat	Special rules
Common name	Scientific name						
*	*	*	*	*	*		*
			*				
CRUSTACEANS							
*	*	*	*	*	*		*
Amphipod, Illinois cave.	*Gammarus acherondytes.*	U.S.A. (IL)	NA	E	642	NA	NA
*	*	*	*	*	*		*

Dated: August 22, 1998.

Jamie Rappaport Clark,

Director, Fish and Wildlife Service.

[FR Doc. 98–23729 Filed 9–2–98; 8:45 am]

BILLING CODE 4310–55–U

DEPARTMENT OF THE INTERIOR

Fish and Wildlife Service

50 CFR Part 32

RIN 1018–AE68

1998–99 Refuge-Specific Hunting and Sport Fishing Regulations

AGENCY: Fish and Wildlife Service, Interior.

ACTION: Final rule.

SUMMARY: The Fish and Wildlife Service (Service or We) adds additional national wildlife refuges (refuges) to the list of areas open for hunting and/or sport fishing, along with pertinent refuge-specific regulations for such activities; and amends certain regulations on other refuges that pertain to migratory game bird hunting, upland game hunting, big game hunting and sport fishing for the 1998–99 season.

DATES: This rule is effective September 3, 1998.

FOR FURTHER INFORMATION CONTACT: Stephen R. Vehrs; Telephone (703) 358–2397; Fax (703) 358–1826.

SUPPLEMENTARY INFORMATION: National wildlife refuges generally are closed to hunting and sport fishing until opened by rulemaking. The Secretary of the Interior (Secretary) may open refuge areas to hunting and/or fishing upon a determination that such uses are compatible. The action also must be in accordance with provisions of all laws applicable to the areas, must be consistent with the principles of sound fish and wildlife management and administration, and otherwise must be in the public interest. Management is intended to ensure that the biological integrity, diversity, and environmental health of the National Wildlife Refuge System (System) are maintained for the benefit of present and future generations of Americans.

We review refuge hunting and fishing programs annually to determine whether to add additional refuges or whether individual refuge regulations governing existing programs need modification, deletion or additions made to them. Changing environmental conditions, State and Federal regulations, and other factors affecting wildlife populations and habitat may warrant modifications ensuring continued compatibility of hunting and fishing programs and that these programs will not materially interfere with or detract from the fulfillment of the mission of the System or the purposes of the refuge.

50 CFR part 32 contains provisions governing hunting and fishing on national wildlife refuges. Hunting and fishing are regulated on refuges to:

- Ensure compatibility;
- Properly manage the fish and wildlife resource;
- Protect other refuge values; and
- Ensure refuge user safety.

On many refuges, the Service policy of adopting regulations identical to State hunting and fishing regulations is adequate in meeting these objectives. On other refuges, it is necessary to supplement State regulations with more restrictive Federal regulations to ensure that we meet our management responsibilities, as outlined under the section entitled ''Statutory Authority.'' We issue refuge-specific hunting and fishing regulations when a wildlife refuge is opened to either migratory game bird hunting, upland game hunting, big game hunting or sport fishing. These regulations list the wildlife species that may be hunted or are subject to sport fishing, seasons, bag limits, methods of hunting or fishing, descriptions of open areas, and other provisions as appropriate. 50 CFR part 32 contains previously issued refuge-specific regulations for hunting and fishing. We promulgate many of the amendments to these sections to standardize and clarify the existing language of these regulations.

Specifically part 32 prohibits the use or possession of toxic shotgun pellets by upland game hunters on Waterfowl Production Areas (WPAs) and certain other areas (refuges, or areas within refuges) of the System to the extent needed to protect against significant exposure to migratory birds as delineated on maps, leaflets and/or signs, available at each refuge headquarters or posted at each refuge, or as stated in refuge specific regulations. This regulation does not apply to turkey and deer hunters using buckshot or slugs, except as specifically authorized by refuge specific regulations.

The only shot allowed in such areas of the System is specifically identified in 50 CFR 20.21(j). The currently approved shot types listed in that regulation are: steel, bizmuth-tin and tungsten-iron. Refuge waterfowl and other migratory birds ingest toxic lead by-products of refuge public hunting programs through their feeding habits and die from lead poisoning. We permit hunting programs on many areas of the System in accordance with existing management plans, policy, procedures and regulations.

Response to Comments Received

In the July 27, 1998, issue of the **Federal Register** (63 FR 40080–40091) we published a proposed rulemaking identifying the refuges, their proposed hunting and/or fishing programs and invited public comments. All substantive comments were reviewed and considered following a 30-day public comment period.

One State conservation agency, four non-government organizations, and 7 individuals commented on the proposed rulemaking. Nearly all comments were concerning the length of the comment period provided, the basic proposal to hunt, or not hunt and the requirement to use or expand the use of nontoxic shot on refuges and WPAs. This specific proposal would authorize certain refuge hunting programs and prohibit the use or possession of toxic shotgun pellets by upland game hunters onto (WPAs) and certain other areas (refuges, or areas within refuges) within the System to the extent needed to protect against significant exposure to migratory birds as delineated on maps, leaflets and/or signs, available at each refuge headquarters or posted at each refuge, or as stated in refuge specific regulations. Refuge managers have the responsibility to determine, on a case by case basis, how much of a refuge acreage would require nontoxic shot based on wetland habitats.

Comment: The public has not been afforded a meaningful opportunity to comment on the proposal.

Response: A 30-day public comment period was afforded the public to comment on the proposed rule. News articles concerning proposed regulations that address the adverse affects of hunting upland and other small game with toxic lead shot in upland areas subject to periodic flooding and seasonal wetland areas have been published in newspapers during the last 6 years. Nontoxic shot for hunting upland and small game was first introduced to west coast refuges in the 1991–92 hunting season, and to southwestern refuges during the 1992–93 hunting season. Refuges in Alaska and waterfowl production areas in the lower 48 states are scheduled to phase in nontoxic shot to hunt certain upland and other small game by the 1997–98 and 1998–99 seasons respectively.

Specifically, in the August 16, 1995, issue of the **Federal Register**, (60 FR 42667–42677), and again in the December 4, 1995, issue of the **Federal Register** (60 FR 62035–62049), the

Service proposed and issued final regulations adopting requirements to use nontoxic shot to hunt wildlife species other than waterfowl and coots on certain refuges beginning with the 1996–97 hunting season, however, voluntary compliance was requested prior to that time. After evaluating those comments received, the Service decided to delay implementation until the 1997–98 season for Alaska, to allow coordination with the State and the outlying villages. Delays were also provided for the waterfowl production areas principally in the Dakotas, Minnesota, Montana, Wisconsin, and Iowa until the 1998–99 season, with voluntary compliance requested in the meantime.

Comment: Objection to the proposal to open additional refuges to hunting.

Response: The National Wildlife Refuge System Improvement Act (NWRSIA) of 1997's principal focus was to establish clearly a wildlife conservation mission for the System, provide managers clear direction and procedures for making determinations regarding wildlife conservation and public uses within areas of the System.

When Congress passed the NWRSIA, they reaffirmed that the System was created to conserve fish, wildlife, and plants and their habitats and this conservation mission has been facilitated by providing Americans opportunities to participate in compatible wildlife-dependent recreation, including hunting on System areas.

Comment: Commenters expressed the opinion that the Service did not adequately document the need for prohibiting the use or possession of toxic shotgun pellets by upland game hunters on WPAs and certain other areas (refuges, or areas within refuges) of the System to the extent needed to protect against significant exposure to migratory birds as delineated on maps, leaflets and/or signs, available at each refuge headquarters or posted at each refuge, or as stated in refuge specific regulations.

Response: Lead shot from hunters' shotguns deposited onto open and ice-covered wetlands, seasonally flooded habitats, and upland habitats in close proximity to these wetlands is toxic to waterfowl and other migratory birds that directly ingest lead products during feeding, and secondarily toxic to predators and carrion feeders that consume these toxic wildlife carcasses. Information not adequately communicated to some hunters and habitat managers for their consideration is the effect of this deposition of toxic lead shot onto these marginal or fringe wetland areas by hunting activities other than waterfowl and coot hunting. Nationwide, efforts by the Service, State wildlife agencies, and several conservation organizations have been ongoing to educate the public and activate programs to reduce this threat to waterfowl, raptors and other susceptible wildlife species. Lead pellets ingested by waterfowl and secondarily by raptors, including eagles, results in the death of these animals due to toxic lead poisoning. Waterfowl may ingest lead shot pellets deposited during upland or small game hunting on dry areas that are subject to seasonal flooding, while feeding in these areas during high water periods and are vulnerable to lead poisoning. This rule will provide broad enforcement authority on refuges, reducing toxic shot enforcement problems in localized areas, thereby reducing the overall threat to wildlife.

Comment: The Service failed to provide results of scientific nontoxic shot studies to the public. The comments indicated the public's support of biologically sound regulations, but opposed to regulations without justification;

Response: Abundant scientific information on the ''Toxicity of Lead Shot to Wildlife'' is available and may be obtained by calling the U.S. Fish and Wildlife Reference Service (FWRS) at 1–800–582–3421 or by accessing the bibliographic databases, where users are referred to 779 citations concerning lead shot poisoning in wildlife. The FWRS is the National lead shot/lead poisoning information clearinghouse. This information is provided directly on the INTERNET site at: http://www.fws.gov/search/fwrefser.html

Comment: All refuge lands should be off-limits to lead deposition because lead is a toxic environmental pollutant.

Response: The use of lead shot on National Wildlife Refuges will continue to be monitored and its use will be prohibited in those habitats where scientific evidence shows it is detrimental to wildlife resource values.

After evaluating the comments received, the Service has decided to implement the regulations as proposed.

Sufficient funds will be available within the refuge budgets to operate these hunting and sport fishing programs.

We determined that uses in this rule are compatible. We further determined that this action is:

- In accordance with the provisions of all applicable laws;
- Consistent with principles of sound fish and wildlife management and administration;
- Consistent with the principles of available science and resources;
- Helps implement Executive Orders 12996 (Management and Public Use of the National Wildlife Refuge System) and 12962 (Recreational Fisheries); and
- Is otherwise in the public interest by providing additional recreational opportunities at national wildlife refuges.

Statutory Authority

The National Wildlife Refuge System Administration Act (NWRSAA) of 1966, (16 U.S.C. 668dd–668ee), and the Refuge Recreation Act (RRA) of 1962 (16 U.S.C. 460k–460K–4), govern the administration and public use of national wildlife refuges.

The National Wildlife Refuge System Improvement Act (NWRSIA) of 1997 (Pub. L. 105–57) is the latest amendment to the NWRSAA. It amends and builds upon the NWRSAA in a manner that provides an improved ''Organic Act'' for the Refuge System similar to those which exist for other public lands. It serves to ensure that the System is effectively managed as a national system of lands, waters and interests for the protection and conservation of our nation's wildlife resources. The NWRSAA states first and foremost that the mission of the System be focused on conservation of fish, wildlife, and plant resources and their habitat. This Act prevents the Secretary from initiating or permitting a new use of a refuge or expanding, renewing, or extending an existing use of a refuge, unless the Secretary has determined that the use is a compatible use and not inconsistent with public safety.

The RRA, authorizes the Secretary to administer areas within the System for public recreation as an appropriate incidental or secondary use only to the extent that it is practicable and not inconsistent with the primary purpose(s) for which the areas were established. This Act requires that any recreational use of refuge lands be compatible with the primary purposes for which a refuge was established and not inconsistent with other previously-authorized operations.

The NWRSAA, and RRA, also authorize the Secretary to issue regulations to carry out the purposes of the Acts and regulate uses.

Hunting and sport fishing plans are developed for each existing refuge prior to opening it to hunting or fishing. In many cases, we develop refuge-specific regulations to ensure the compatibility of the programs with the purposes for which the refuge was established. Initial compliance with the NWRSAA and the RRA has been ensured for hunting and

sport fishing on newly acquired refuges through an interim determination of compatibility made at the time of acquisition. This ensures that the determinations required by these acts are made prior to adding refuges to the lists of areas open to hunting and fishing in 50 CFR part 32. We ensure continued compliance by the development of long-term hunting and sport fishing plans and by annual review of hunting and sport fishing programs and regulations.

In preparation for new openings, the following documents are included in the refuge's ''openings package'' for Regional review and approval from the Washington Office: an interim hunting and fishing management plan; a Section 7 determination pursuant to the Endangered Species Act, that these openings will have no effect, or are not likely to have an adverse effect, on listed species or critical habitats; a letter of concurrence from the affected State; interim compatibility determination; and refuge-specific regulations to administer the hunting and/or fishing programs. Upon review of these documents, the Service, acting for the Secretary, has determined that the opening of these National Wildlife Refuges to hunting and fishing is compatible with the principles of sound fish and wildlife management and administration and otherwise will be in the public interest.

The following wildlife-dependent recreational activities are allowed:

Hunting of migratory game birds, upland game and big game at Canaan Valley National Wildlife Refuge, West Virginia.

Hunting of migratory game birds and upland game at Key Cave National Wildlife Refuge, Alabama.

Hunting of migratory game birds and sport fishing at Trustom Pond National Wildlife Refuge, Rhode Island.

Sport fishing at Breton National Wildlife Refuge, Louisiana; Amagansett, Oyster Bay, Seatuck and Target Rock National Wildlife Refuges, New York; Block Island, Ninigret, Pettaquamscutt Cove and Sachuest Point National Wildlife Refuges, Rhode Island; Dungeness and Nisqually National Wildlife Refuges, Washington; Guam, Kilauea Point and Midway Atoll National Wildlife Refuges, Pacific Islands Territory. The remaining regulations represent revisions to existing refuge specific regulations.

In accordance with the NWRSAA and the RRA, we have determined that these openings are compatible and consistent with the primary purposes for which these refuges were established.

Need for This Regulation

The Service adds additional refuges to the list of areas open for hunting and/or sport fishing, along with pertinent refuge-specific regulations for such activities; and amends certain regulations on other refuges that pertain to migratory game bird hunting, upland game hunting, big game hunting and sport fishing for the 1998–99 season. On many refuges, our policy of adopting regulations identical to State regulations is adequate in meeting National Wildlife Refuge System objectives. On other refuges, it is necessary to supplement State regulations with more restrictive Federal regulations to ensure that we meet our management responsibilities, as outlined under the section entitled ''Statutory Authority'' in the rule. We issue refuge-specific regulations when opening a national wildlife refuge or modifying the various uses of a refuge, and for all hunting or sport fishing. These regulations list the prohibited uses, limited uses, and those activities that are available without restriction. They also list those wildlife species that may be hunted or fished for along with the respective, seasons, bag limits, methods of hunting or fishing, descriptions of open areas, and other provisions as appropriate. Many of the amendments are promulgated here to provide greater restriction and clarify the existing regulation language, which should result in less violations of refuge regulations.

Why Alternative Approaches Are Not Feasible

Refuge officers process violations notices through the Federal District Court's Violation Notice procedures. U.S. Magistrates have required refuge regulations to be printed in the Code of Federal Regulations before they will accept refuge violations into their courts. Federal recreation regulations are not prosecuted in the State courts, and voluntary compliance of regulations has not been successful.

Authority Under Which This Rule Will Be Published

The National Wildlife Refuge System Administration Act of 1966, (16 U.S.C. Sec. 668dd (b)(5) and (d)(1)).

Regulatory Planning and Review

In accordance with the criteria in Executive Order 12866, this rule is not a significant regulatory action.

a. This rule will not have an annual economic effect of $100 million or adversely affect an economic sector, productivity, jobs, the environment, or other units of government. A cost-benefit and economic analysis is not required. This rule is administrative, legal, technical, and procedural in nature and makes only minor modifications to existing refuge public use programs. The regulations do not liberalize refuge regulations, but clarifies what a refuge visitor may or may not do on a refuge.

b. This rule will not create inconsistencies with other agencies' actions. Recreational use on National Wildlife Refuges is coordinated with State governments as well as other Federal agencies having adjoining or over-lapping jurisdiction before the regulations are proposed. The regulation is consistent with, and not less restrictive than, other agencies' rules.

c. This rule will not materially affect entitlements, grants, user fees, loan programs, or the rights and obligations of their recipients. The provisions of this rule only apply to persons involved in wildlife-dependent public use including regulated hunting and sport fishing on National Wildlife Refuges, which is a privilege and not a right. User fees will not change as a result of this rule.

d. This rule will not raise novel legal or policy issues. The Solicitor's office has reviewed and approved the contents of this rule.

Regulatory Flexibility Act

The Department of the Interior certifies that this rule will not have a significant economic effect on a substantial number of small entities such as businesses, organizations and governmental jurisdictions in the area as defined under the Regulatory Flexibility Act (5 USC 601 *et seq.*). A final Regulatory Flexibility Analysis is not attached, and a Small Entity Compliance Guide is not required.

This rulemaking will not have a significant economic impact on a substantial number of small entities. The National Wildlife Refuge System was created to conserve fish, wildlife, and plants and their habitats. This conservation mission has been facilitated by providing Americans opportunities to visit and participate in compatible wildlife-dependent recreation, including fishing, hunting, wildlife observation and photography, and environmental education and interpretation as priority public uses on National Wildlife Refuges and to better appreciate the value of, and need for, fish and wildlife conservation.

This rule is administrative, legal, technical and procedural in nature and provides for minor changes to the methods of hunting and fishing permitted within the National Wildlife Refuge System, but does not stop the

overall use permitted. This rule will not change the number of visitors using refuges, nor the amount of revenue spent in the area of refuges during these visits. This rulemaking will have no impact on local economies by increasing or decreasing visitation and expenditures in the surrounding area of national wildlife refuges because this rule does not restrict visitors from utilizing refuges, but rather modifies their behavior while they are on refuges.

Refuge visitors will continue to contribute to the local economies at the same rate for food and lodging, transportation, fishing and hunting licenses, binoculars, spotting scopes, outdoor magazines, sportsman's club membership dues, contributions, land leasing and ownership, hunting and fishing stamps, tags, permits, arms, ammunition and fishing tackle.

Economic impacts of refuge fishing and hunting programs on local communities are calculated from average expenditures in the ''1996 National Survey of Fishing, Hunting, and Wildlife-Associated Recreation'' and ''Banking on Nature: The Economic Benefits to Local Communities of National Wildlife Refuge Visitation.''

In 1996, 77 million U.S. residents, about 40 percent of the population 16 years old and older, participated in wildlife-associated recreation activities expending $101 billion in the United States. Of this group, 35.2 million enjoyed a variety of fishing opportunities and 14 million hunted, while 62.9 million enjoyed at least one type of wildlife-watching recreation activity including observing, feeding or photographing fish and other wildlife, in the United States.

Recreational visits to national wildlife refuges generates substantial economic activity. In fiscal year 1996, people visited refuges more than 29.6 million times for recreation and environmental education. Their spending generated $401.1 million of sales in regional economies. As this spending flowed through the economy, it generated more than 10,000 employed people and $162.9 million in employment income. This spending should continue at a proportionate rate into the future.

At these 71 National Wildlife Refuges included in this regulation, 701,000 fishermen are estimated to spend $28.7 million annually in pursuit of their sport, while approximately 343,000 hunters will spend $11.3 million annually hunting on the refuges. While many of these fishermen and hunters already make such expenditures prior to the refuge opening, some of these additional expenditures directly are due to the land now being open to the general public.

Small Business Regulatory Enforcement Fairness Act

This rule is not a major rule under 5 U.S.C. 804(2), the Small Business Regulatory Enforcement Fairness Act. This rule:

a. Does not have an annual effect on the economy of $100 million or more. These regulations will affect only visitors at National Wildlife Refuges. It will not cause any changes in the number of visitors using the refuge, but only limit what they can do while they are on a refuge. Refer to response under Regulatory Flexibility Act.

b. Will not cause a major increase in costs or prices for consumers, individual industries, Federal, State, or local government agencies, or geographic regions. These regulations will affect only visitors at National Wildlife Refuges. It will not cause any changes in the number of visitors using the refuge, but only limit what they can do while they are on a refuge. Refer to response under Regulatory Flexibility Act.

c. Does not have significant adverse effects on competition, employment, investment, productivity, innovation, or the ability of U.S.-based enterprises to compete with foreign-based enterprises. These regulations will affect only visitors at National Wildlife Refuges. It will not cause any changes in the number of visitors using the refuge, but only limit what they can do while they are on a refuge. Refer to response under Regulatory Flexibility Act.

Unfunded Mandates Reform Act

In accordance with the Unfunded Mandates Reform Act (2 U.S.C. 1501, *et seq.*):

a. This rule will not ''significantly or uniquely'' affect small governments. A Small Government Agency Plan is not required.

b. This rule will not produce a Federal mandate of $100 million or greater in any year, *i.e.*, it is not a ''significant regulatory action'' under the Unfunded Mandates Reform Act.

Takings

In accordance with Executive Order 12630, the rule does not have significant takings implications. We have determined that the rule has no potential takings of private property implications A takings implication assessment is not required. These regulations will affect only visitors at National Wildlife Refuges. It will not cause any changes in the number of visitors using the refuge, but only limit what they can do while they are on a refuge. Refer to response under Regulatory Flexibility Act.

Federalism

In accordance with Executive Order 12612, the rule does not have significant Federalism effects. A Federalism assessment is not required. This rule will not have substantial direct effects on the States, in their relationship between the Federal Government and the States, or on the distribution of power and responsibilities among the various levels of government. Therefore, in accordance with Executive Order 12612, we have determined that this rule does not have sufficient Federalism implications to warrant the preparation of a Federalism Assessment.

Civil Justice Reform

In accordance with Executive Order 12988, the Office of the Solicitor has determined that the rule does not unduly burden the judicial system and meets the requirements of sections 3(a) and 3(b)(2) of the Order. The regulation will clarify established regulations, and result in better understanding of the regulations by refuge visitors. They will be enforced through the use of U.S. District Court Violation Notice procedures. A refuge regulation violator can plead guilty and forfeit a set amount of fine established at the time of the violation by the refuge officer. This is completed through the mail without a court appearance. A violator can also plead not guilty on the notice and the Magistrates Court will set an appearance date and time and notify both the violator and officer to appear in Magistrates Court for a hearing and/or trial,in accordance with U.S. District Court Rules of Procedure.

Paperwork Reduction Act (44 U.S.C. 3501 et seq., 5 CFR 1320, Pub. L. 04–13)

This regulation does not contain any information collection that requires Office of Management and Budget approval under the Paperwork Reduction Act 44 U.S.C. 3501 *et. seq.*

Government-to-Government Relationship With Tribes

In accordance with the President's memorandum of April 29, 1994, ''Government-to-Government Relations with Native American Tribal Governments'' (59 FR 22951) and 512 DM 2, we have evaluated possible effects on Federally recognized Indian tribes and have determined that there are no effects.

Section 7 consultation (16 U.S.C. 1531 et seq., 50 CFR 402)

In preparation for new openings, Section 7 consultation documents are included in the refuge's ''openings package'' for Regional review and approval from the Washington Office. We reviewed the changes in hunting and fishing herein with regard to Section 7 of the Endangered Species Act of 1973 (16 U.S.C. 1531–1543) and find the action is not likely to jeopardize the continued existence of any endangered species or threatened species or result in the destruction or adverse modification of habitat of such species within the System since the rule is primarily administrative, legal, technical or procedural in nature and/or makes minor modifications to existing public use programs. We comply with Section 7 of the Endangered Species Act of 1973 (16 U.S.C. 1531–1543) when developing comprehensive conservation plans, refuge public use management plans, and prior to implementing any new or revised public recreation program on a refuge as identified in 50 CFR 26.32. Determinations required by the Endangered Species Act are also made on a case-by-case basis before the addition of a refuge to the lists of areas open to hunting or fishing as contained in 50 CFR 32.7.

National Environmental Policy Act

We analyzed this rule in accordance with the criteria of the National Environmental Policy Act and 318 DM 2.2(g) and 6.3(D). This rule does not constitute a major Federal action significantly affecting the quality of the human environment. An environmental impact statement/assessment is not required. We ensure compliance when hunting and sport fishing plans are developed, and the determinations required by NEPA are made prior to the addition of refuges to the lists of areas open to hunting and fishing in 50 CFR part 32. In compliance with the requirements of section 102(2)(C) of the National Environmental Policy Act of 1969 (42 U.S.C. 4332(C)), and the Council on Environmental Quality's regulation for implementing NEPA (40 CFR 1500–1508), we have prepared several environmental analyses of lead shot vs. non-toxic shot as it relates to waterfowl and other wildlife with the latest being an Environmental Assessment (EA) in May, 1998. The amendment of refuge-specific hunting and fishing regulations are subject to a categorical exclusion from the NEPA process if they do not significantly alter the existing use of a particular national wildlife refuge. The Service exclusion found at 516 DM 6, App. 1.4 B(7) is employed here as these amendments are considered ''[m]inor changes in the amounts or types of public use on Service or State-managed lands, in accordance with regulations, management plans, and procedures.'' These refuge-specific hunting and fishing regulations simply qualify or otherwise define a hunting or fishing activity, for purposes of resource management. These documents are on file in the offices of the Service and may be viewed by contacting the primary author noted below.

Available Information for Specific Refuges

Individual refuge headquarters retain information regarding public use programs and the conditions that apply to their specific programs, and maps of their respective areas. You may also obtain information from the regional offices at the addresses listed below:

Region 1—California, Hawaii, Idaho, Nevada, Oregon, and Washington. Assistant Regional Director—Refuges and Wildlife, U.S. Fish and Wildlife Service, Eastside Federal Complex, Suite 1692, 911 N.E. 11th Avenue, Portland, Oregon 97232–4181; Telephone (503) 231–6214.

Region 2—Arizona, New Mexico, Oklahoma and Texas. Assistant Regional Director—Refuges and Wildlife U.S. Fish and Wildlife Service, Box 1306, Albuquerque, New Mexico 87103; Telephone (505) 766–1829.

Region 3—Illinois, Indiana, Iowa, Michigan, Minnesota, Missouri, Ohio and Wisconsin. Assistant Regional Director—Refuges and Wildlife, U.S. Fish and Wildlife Service, Federal Building, Fort Snelling, Twin Cities, Minnesota 55111; Telephone (612)–713–5300.

Region 4—Alabama, Arkansas, Florida, Georgia, Kentucky, Louisiana, Mississippi, North Carolina, Tennessee, South Carolina, Puerto Rico and the Virgin Islands. Assistant Regional Director—Refuges and Wildlife, U.S. Fish and Wildlife Service, 1875 Century Boulevard, Room 324, Atlanta, Georgia 30345; Telephone (404) 679–7152.

Region 5—Connecticut, Delaware, District of Columbia, Maine, Maryland, Massachusetts, New Hampshire, New Jersey, New York, Pennsylvania, Rhode Island, Vermont, Virginia and West Virginia. Assistant Regional Director—Refuges and Wildlife, U.S. Fish and Wildlife Service, 300 Westgate Center Drive, Hadley, Massachusetts 01035–9589; Telephone (413) 253–8550.

Region 6—Colorado, Kansas, Montana, Nebraska, North Dakota, South Dakota, Utah and Wyoming. Assistant Regional Director—Refuges and Wildlife, U.S. Fish and Wildlife Service, Box 25486, Denver Federal Center, Denver, Colorado 80225; Telephone (303) 236–8145.

Region 7—Alaska. Assistant Regional Director—Refuges and Wildlife, U.S. Fish and Wildlife Service, 1011 E. Tudor Rd., Anchorage, Alaska 99503; Telephone (907) 786–3545.

Primary Author: Stephen R. Vehrs, Refuge Program Specialist, Division of Refuges, U.S. Fish and Wildlife Service, Washington, DC 20240, is the primary author of this rulemaking document.

List of Subjects in 50 CFR Part 32

Fishing, Hunting, Reporting and recordkeeping requirements, Wildlife, Wildlife refuges.

For the reasons set forth in the preamble, the Service amends Title 50, Chapter I, subchapter C of the Code of Federal Regulations as follows:

PART 32—[AMENDED]

1. The authority citation for part 32 continues to read as follows:

Authority: 5 U.S.C. 301; 16 U.S.C. 460k, 664, 668dd–668ee, and 715i.

2. Section 32.2 is amended by revising the heading, the introductory text, and by adding paragraph (k) to read as follows:

§ 32.2 General provisions regarding hunting on areas of the National Wildlife Refuge System.

The following provisions shall apply to each person while engaged in public hunting on areas of the National Wildlife Refuge System:

* * * * *

(k) Persons may only use or possess nontoxic shot identified in 50 CFR 20.21(j) while hunting with shotguns or muzzleloaders on Waterfowl Production Areas, or on certain other areas of the National Wildlife Refuge System to the extent needed to protect against significant exposure to migratory birds as delineated on maps, leaflets and/or signs, available at each refuge headquarters or posted at each refuge, or as stated in refuge specific regulations. This regulation does not apply to turkey and deer hunters using buckshot or slugs, except as specifically authorized by refuge specific regulations.

§ 32.7 [Amended]

3. Section 32.7 is amended by alphabetically adding the listing ''Key Cave National Wildlife Refuge'' to the State of Alabama; by alphabetically adding the listing ''Breton National Wildlife Refuge'' to the State of Louisiana; by removing the alphabetical

listing of ''Pond Island National Wildlife Refuge'' from the State of Maine; by alphabetically adding the listings ''Amagansett National Wildlife Refuge,'' ''Oyster Bay National Wildlife Refuge,'' ''Seatuck National Wildlife Refuge,'' and ''Target Rock National Wildlife Refuge'' to the State of New York; by revising the listing of ''Tinicum National Environmental Center to read ''John Heinz National Wildlife Refuge at Tinicum'' in the State of Pennsylvania; by alphabetically adding the listings ''Block Island National Wildlife Refuge,'' ''Ninigret National Wildlife Refuge,'' ''Pettaquamscutt Cove National Wildlife Refuge,'' ''Sachuest Point National Wildlife Refuge,'' and ''Trustom Pond National Wildlife Refuge'' to the State of Rhode Island; by alphabetically adding the listings ''Dungeness National Wildlife Refuge'' and ''Nisqually National Wildlife Refuge'' to the State of Washington; by alphabetically adding the listing ''Canaan Valley National Wildlife Refuge'' to the State of West Virginia; by alphabetically adding the listings ''Guam National Wildlife Refuge'' and ''Midway Atoll National Wildlife Refuge'' to the Pacific Islands Territory.

4. Section 32.20 *Alabama* is amended by revising paragraphs D.1., D.2. and adding paragraph D.4. of Eufaula National Wildlife Refuge; and adding the alphabetical listing of Key Cave National Wildlife Refuge to read as follows:

§ 32.20 Alabama.

* * * * *

Eufaula National Wildlife Refuge

* * * * *

D. Sport Fishing. * * *

1. Fishermen may fish, including bowfishing, only during daylight hours in refuge impoundments and waters other than the Walter F. George Reservoir.

2. Fishermen may not frog or trap turtles in impounded waters not contiguous with the Walter F. George Reservoir.

* * * * *

4. Reciprocal license agreements between Alabama and Georgia only apply to waters contiguous with the Walter F. George Reservoir. Anglers fishing in refuge impoundments must possess a license for the state in which they are fishing.

Key Cave National Wildlife Refuge

A. Hunting of Migratory Game Birds. Hunters may hunt mourning doves on designated portions of the refuge subject to the following condition: Refuge permits required.

B. Upland Game Hunting. Hunters may hunt only quail, squirrel, rabbits, raccoons, and opossum on designated portions of the refuge subject to the following condition: Refuge permits required.

C. Big Game Hunting. [Reserved]

D. Sport Fishing. [Reserved]

* * * * *

5. Section 32.24 *California* is amended by revising paragraph C.1. of Clear Lake National Wildlife Refuge to read as follows:

§ 32.24 California.

* * * * *

Clear Lake National Wildlife Refuge

* * * * *

C. Big Game Hunting. * * *

1. Hunters may hunt only in the unit for nine (9) consecutive days beginning on the first Saturday following the third Wednesday in August.

* * * * *

6. Section 32.28 *Florida* is amended by revising paragraph D.3. of Lower Suwannee National Wildlife Refuge; by revising paragraph B. and paragraph D. of St. Marks National Wildlife Refuge; and by revising paragraph D. of Ten Thousand Islands National Wildlife Refuge to read as follows:

§ 32.28 Florida.

* * * * *

Lower Suwannee National Wildlife Refuge

* * * * *

D. Sport Fishing. * * *

* * * * *

3. Boats may not be left on the refuge overnight.

* * * * *

St. Marks National Wildlife Refuge

* * * * *

B. Upland Game Hunting. Hunters may hunt squirrel, rabbit, and raccoon on designated areas of the refuge subject to the following condition: Permits required.

* * * * *

D. Sport Fishing. Anglers may fish and crab on designated areas of the refuge subject to the following conditions:

1. Anglers may fish and crab only from sunrise to sunset.

2. Anglers may only use boats with motors of 10 horsepower or less in refuge pools and lakes.

3. Anglers may only use boats with or without motors on the St. Marks Unit pools from March 15 through October 15 annually.

4. Anglers may take only fish species, and fish limits authorized by State regulations.

5. Anglers may not take frogs or turtles.

6. Anglers may fish and boat in Panacea Unit ponds year round. Anglers may access Panacea Unit ponds in a vehicle only from March 15 through May 15 annually. Anglers may fish and boat in Otter Lake year round.

7. Anglers may not launch commercial boats at the saltwater boat ramp on Co. Rd. 59 (Lighthouse Rd.).

8. Anglers may only take bait fish and non-game fish by hook and line in refuge ponds, lakes, and impoundments.

9. Anglers may not use crab traps in refuge pools and impoundments on the St. Marks Unit.

* * * * *

Ten Thousand Islands National Wildlife Refuge

* * * * *

D. Sport Fishing. Anglers may fish only in designated portions of the refuge subject to the following conditions:

1. Anglers may not use airboats, hovercraft, off road vehicles, or personal water craft in freshwater and brackish water wetlands and water bodies.

2. Anglers may fish in freshwater and brackish water creeks and ponds year round from sunrise to sunset. Anglers may enter these areas only from sunrise to sunset.

3. Anglers may fish in tidal waters year round and 24 hours a day.

4. Anglers may not fish with trotlines, gigs, spears, bush hooks, snatch hooks, crossbows or bows and arrows of any type.

5. Anglers may enter the refuge to crab in freshwater and brackish water areas only from sunrise to sunset. Recreational anglers may use crab pots only in accordance with State regulations, except that crab pots abandoned or not checked after 72 hours are subject to impoundment.

* * * * *

7. Section 32.29 *Georgia* is amended by revising paragraph D.5. of Blackbeard Island National Wildlife Refuge; by revising paragraphs D.1. and D.3. of Harris Neck National Wildlife Refuge; by revising paragraphs D.1., D.2., D.4. and adding paragraph D.6. of Savannah National Wildlife Refuge; by revising the introductory text of paragraph D and revising paragraph D.1., and by removing paragraph D.3. of Wolf Island National Wildlife Refuge to read as follows:

§ 32.29 Georgia.

* * * * *

Blackbeard Island National Wildlife Refuge

* * * * *

D. Sport Fishing. * * *

* * * * *

5. Anglers may bank fish into estuarine waters daily from sunrise to sunset only.

* * * * *

Harris Neck National Wildlife Refuge

* * * * *

D. Sport Fishing. * * *

1. Anglers may fish in estuarine waters year round from sunrise to sunset daily.

* * * * *

3. Anglers may use the Barbour River public boat ramp as public access year-round from 4:00 a.m. to 12:00 p.m. (midnight), daily. However, anglers may not use the Barbour River public boat ramp as access from 12:01 a.m. to 3:59 a.m. daily.

* * * * *

Savannah National Wildlife Refuge

* * * * *

D. Sport Fishing. * * *

1. Anglers may fish in refuge impoundments and canals from March 1 through November 30 annually.

2. Anglers may fish in Kingfisher Pond year round.

* * * * *

4. Anglers may bank fish year round in the canals adjacent to the wildlife drive.

* * * * *

6. Anglers may only use non-motorized boats and boats with electric motors within impounded waters.

* * * * *

Wolf Island National Wildlife Refuge

* * * * *

D. Sport Fishing. Anglers may fish in designated areas of the refuge subject to the following condition:

1. Anglers may fish year round.

* * * * *

8. Section 32.32 *Illinois* is amended by revising paragraphs A.1., A.2., A.3. and B.3. of Cypress Creek National Wildlife Refuge to read as follows:

§ 32.32 Illinois.

* * * * *

Cypress Creek National Wildlife Refuge

A. Hunting of Migratory Game Birds. * * *

1. Hunters may dove hunt on sunflower fields only on Mondays, Wednesdays, and Saturdays starting September 1. Hunters may hunt only from noon to 5 pm. Hunters must sign in and out and report daily harvest at registration box. All hunting must be from field borders only. Hunters may not hunt or shoot from the interior of sunflower fields or within 100 yards of roadways. Hunters may not carry or use guns while retrieving downed doves from field interiors.

2. On the Bellrose Waterfowl Reserve—Hunters may not hunt ducks. Hunters may hunt only geese following the closure of the state duck season. Hunters may hunt only on Tuesdays, Thursdays, and Sundays. Hunters may hunt only from sunrise to 1 pm. All hunters must remove blinds and decoys, and be off the unit by 2 pm daily. Hunters may not enter the area prior to 5 am. Hunters may not hunt during special snow goose seasons after the closure of the regular goose season. Hunters may use only temporary or portable blinds; Hunters may not construct pit blinds. No one may hunt within 100 yards of any private property boundary. Distance between hunting parties must be at least 200 yards. All hunters must sign in and out and report daily harvest at the registration box.

3. Hunters must remove boats, decoys, and blinds from the refuge at the conclusion of each days hunt.

* * * * *

B. Upland Game Hunting. * * *

* * * * *

3. Hunters may only use or possess nontoxic shot while hunting for any permitted birds except wild turkey. Hunters may use lead shot while hunting wild turkey.

* * * * *

9. Section 32.34 *Iowa* is amended by revising paragraphs B. and C.2. of Union Slough National Wildlife Refuge to read as follows:

§ 32.34 Iowa.

* * * * *

Union Slough National Wildlife Refuge

* * * * *

B. Upland Game Hunting. Hunters may hunt upland game in designated areas of the refuge subject to the following condition: Hunters may only use or possessed nontoxic shot while hunting upland game, except wild turkeys. Hunters may possess and use lead shot for wild turkey hunting.

C. Big Game Hunting. * * *

* * * * *

2. Hunters must remove all hunting stands from the refuge at the end of each day's hunt.

* * * * *

10. Section 32.35 *Kansas* is amended by adding Marais des Cygnes National Wildlife Refuge to read as follows:

§ 32.35 Kansas.

* * * * *

Marais des Cygnes National Wildlife Refuge

* * * * *

A. Hunting of Migratory Game Birds. [Reserved]

B. Upland Game Hunting. Hunters may hunt upland game on designated areas of the refuge consistent with State regulations, and subject to refuge-specific regulations as posted.

C. Big Game Hunting. Hunters may hunt big game on designated areas of the refuge consistent with State regulations, and subject to refuge-specific regulations as posted.

D. Sport Fishing. Anglers may sportfish in accordance with State law and refuge-specific restrictions as posted.

* * * * *

11. Section 32.36 *Kentucky* is amended by adding paragraph D.3. of Reelfoot National Wildlife Refuge to read as follows:

§ 32.36 Kentucky.

* * * * *

Reelfoot National Wildlife Refuge

* * * * *

D. Sport Fishing. * * *

* * * * *

3. Anglers may not enter the refuge, or use airboats, hovercraft, or jet skis (personal water-craft) on any waters within the refuge boundary.

12. Section 32.37 *Louisiana* is amended by revising paragraph A. of Bayou Cocodrie National Wildlife Refuge; by adding Breton National Wildlife Refuge; by revising paragraphs A. and D., of Cameron Prairie National Wildlife Refuge; and by revising the text of paragraphs A., and D., of Lake Ophelia National Wildlife Refuge to read as follows:

§ 32.37 Louisiana.

* * * * *

Bayou Cocodrie National Wildlife Refuge

A. Hunting of Migratory Game Birds. Hunters may hunt woodcock and snipe on designated areas of the refuge subject to the following condition: Hunters must possess a refuge permit.

* * * * *

Breton National Wildlife Refuge

A. Hunting of Migratory Game Birds. [Reserved]

B. Upland Game Hunting. [Reserved]

C. Big Game Hunting. [Reserved]

D. Sport Fishing. Anglers may fish and crab on designated areas of the

refuge subject to the following conditions:

1. Anglers may fish year-round.

2. Crabbers must tend crabbing equipment at all times.

3. Anglers may not use trotlines, slat traps, or nets.

* * * * *

Cameron Prairie National Wildlife Refuge

A. Hunting of Migratory Game Birds. Hunters may hunt waterfowl on designated areas of the refuge subject to the following condition: Refuge permits required.

* * * * *

D. Sport Fishing. Anglers may sport fish in Gibbston Unit. Anglers may sport fish and castnet in the East Cove Unit subject to the following conditions: Any person entering, using or occupying the refuge must abide by all terms and conditions set forth in the appropriate refuge fishing brochure.

* * * * *

Lake Ophelia National Wildlife Refuge

A. Hunting of Migratory Game Birds. Hunters may hunt duck, coots, woodcock, and snipe on designated areas of the refuge subject to the following condition: Hunters must possess a refuge daily permit.

* * * * *

D. Sport Fishing. Anglers may fish in designated areas of the refuge subject to the following condition: Anglers must possess a refuge daily permit.

* * * * *

13. Section 32.38 *Maine* is amended by removing the alphabetical listing of Pond Island National Wildlife Refuge; by adding paragraph A.3., revising the introductory text of B., revising paragraphs B.2., B.3., removing B.4., revising C.2., adding C.3. and C.4. of Rachel Carson National Wildlife Refuge; and by revising paragraph D. of Sunkhaze Meadows National Wildlife Refuge to read as follows:

§ 32.38 Maine.

* * * * *

Rachel Carson National Wildlife Refuge

* * * * *

A. Hunting of Migratory Game Birds.

* * * * *

3. Designated Youth Hunting Areas are open to individuals under 18 who possess a permit. An adult must accompany youths under 15 years of age. Accompanying adults possessing a permit may hunt.

B. Upland Game Hunting. Hunters may hunt pheasants on designated areas of the refuge subject to the following conditions:

* * * * *

2. Hunters during the firearm deer season must wear in a conspicuous manner on head, chest and back a minimum of 400 square inches (10.16 square meters) of solid-colored hunter orange clothing or material.

3. Hunters must possess and use, while in the field, only nontoxic shot.

C. Big Game Hunting. * * *

* * * * *

2. Designated youth hunting areas are open to individuals under 18 who possess a permit. An adult must accompany youths under 15 years of age. Accompanying adults who possess a permit may hunt.

3. Hunters may hunt fox and coyotes during the firearm deer season only.

4. Hunters during the firearm deer season must wear in a conspicuous manner on head, chest and back a minimum of 400 square inches (10.16 square meters) of solid-colored hunter orange clothing or material.

* * * * *

Sunkhaze Meadows National Wildlife Refuge

* * * * *

D. Sport Fishing. Anglers may fish in the waters of and from the banks of Sunkhaze Stream, Birch Stream, and Little Birch Stream, in accordance with state regulations.

14. Section 32.39 *Maryland* is amended by revising paragraph C. and by revising paragraph D. of Eastern Neck National Wildlife Refuge to read as follows:

§ 32.39 Maryland.

* * * * *

Eastern Neck National Wildlife Refuge

* * * * *

C. Big Game Hunting. Hunters may hunt deer and turkey on designated areas of the refuge subject to the following conditions:

1. Refuge permits required.

2. The refuge is open to limited turkey hunting during the state spring turkey season.

3. Hunters may only use archery, shotguns, and muzzleloaders for deer, and shotguns only for turkey.

4. Hunters may not possess loaded weapons in parking areas, blacktopped or graveled roads.

5. Deer hunters must wear in a conspicuous manner on head, chest and back a minimum of 400 square inches of solid colored hunter orange clothing or material.

6. Turkey hunters must wear a hat or cap of hunter orange when moving to or from their blind or hunting position.

D. Sport Fishing. Anglers may saltwater fish from the Eastern Neck Island bridge in accordance with state regulations.

* * * * *

15. Section 32.40 *Massachusetts* is amended by revising paragraph D. of Oxbow National Wildlife Refuge to read as follows:

§ 32.40 Massachusetts.

* * * * *

Oxbow National Wildlife Refuge

* * * * *

D. Sport Fishing. Anglers may fish along the banks of the Nashua River in accordance with state regulations.

* * * * *

16. Section 32.42 *Minnesota* is amended by revising the introductory text of paragraph B., and adding paragraph B.3. of Tamarac National Wildlife Refuge to read as follows:

§ 32.42 Minnesota.

* * * * *

Tamarac National Wildlife Refuge

* * * * *

B. Upland Game Hunting. Hunters may hunt ruffed grouse, red, gray and fox squirrel, cottontail rabbit, jackrabbit, snowshoe hare, red fox, raccoon, and striped skunk on designated areas of the refuge subject to the following conditions:

* * * * *

3. Shotgun hunters may only use and possess nontoxic shot while hunting for all upland game species.

* * * * *

17. Amend § 32.43 *Mississippi* by revising paragraphs A., B., and C., of Dahomey National Wildlife Refuge; by revising paragraph D. of Hillside National Wildlife Refuge; by revising paragraph D. of Mathews Break National Wildlife Refuge; by revising paragraph D. of Morgan Break National Wildlife Refuge; by revising paragraph D. of Panther Swamp National Wildlife Refuge; revising paragraphs A., B., and C., and adding paragraphs D.4 and D.5. of St. Catherine Creek National Wildlife Refuge to read as follows:

§ 32.43 Mississippi.

* * * * *

Dahomey National Wildlife Refuge

A. Hunting of Migratory Game Birds. Hunters may hunt migratory waterfowl and coots on designated areas of the refuge subject to the following condition: Refuge permits required.

B. Upland Game Hunting. Hunters may hunt squirrel, rabbit, beaver and raccoon on designated areas of the refuge subject to the following condition: Refuge permits required.

C. Big Game Hunting. Hunters may hunt deer and turkey on designated areas of the refuge subject to the following condition: Refuge permits required.

* * * * *

Hillside National Wildlife Refuge

* * * * *

D. Sport Fishing. Anglers may fish and frog in designated portions of the refuge subject to the following condition: Fishermen must possess a refuge public use permit.

* * * * *

Mathews Brake National Wildlife Refuge

* * * * *

D. Sport Fishing. Anglers may fish and frog in designated areas of the refuge subject to the following condition: Fishermen must possess a refuge public use permit.

Morgan Brake National Wildlife Refuge

* * * * *

D. Sport Fishing. Anglers may fish and frog in designated portions of the refuge subject to the following condition: Fishermen must possess a refuge public use permit.

* * * * *

Panther Swamp National Wildlife Refuge

* * * * *

D. Sport Fishing. Anglers may fish and frog in designated areas of the refuge subject to the following condition: Fishermen must possess a refuge public use permit.

St. Catherine Creek National Wildlife Refuge

A. Hunting of Migratory Game Birds. Hunters may hunt ducks, and coots in Gilliard Lake only subject to the following conditions:

1. Refuge permits required.
2. Hunters may hunt only on Tuesdays, Thursdays, and Saturdays from ½ hour before sunrise until 12:00 noon during the State season.
3. Hunters may not be on the refuge after 1:00 p.m.
4. Hunters may use portable blinds only and they must be removed after each hunt.
5. Hunters may use approved non-toxic shot only: possession or use of lead shot is prohibited.
6. Hunters may only use a maximum of 15 horse power outboard or electric motors.
7. Hunters may use retriever dogs.
8. Youth waterfowl hunters may hunt in Gilliard Lake only on the weekend after the state regular season closes.

B. Upland Game Hunting. Hunters may hunt rabbit, squirrel, and raccoon on designated areas of the refuge subject to the following conditions:

1. Refuge permits required, and raccoon hunters must have a special permit for raccoon night hunting.
2. Hunters may hunt rabbit and squirrel during two separate seasons, one without dogs and one designated with dogs.
3. Hunters may hunt raccoons, special permit required from 6 p.m. until 6 a.m. each night.
4. Hunters may hunt raccoons with dogs.

C. Big Game Hunting. Hunters may hunt deer and turkey on designated areas of the refuge subject to the following conditions:

1. Refuge permits required.
2. Archery and muzzle loading seasons are available. No gun hunts for deer.
3. Hunters may take either sex—4-points or greater (non-resident hunters may only harvest antlered deer).
4. Hunting allowed sunrise to sunset only.
5. Hunters may use portable deer stands and they must be removed after each hunt.
6. There will be a designated youth hunt for deer.
7. Youth hunters may hunt turkey on the Sibley unit on designated dates.
8. Five youth hunters will be lottery drawn and may hunt during the first weekend and five youth hunters during the second weekend.
9. Youth hunters must submit lottery applications to the refuge to be considered for the drawing.

D. Sport Fishing. * * *

* * * * *

4. Anglers may not use nets, seines, trotlines or any device for taking fish other than rod and reel.
5. Anglers may not commercial fish.

18. Section 32.45 *Montana* is amended by revising paragraphs A., B. and D., of Benton Lake National Wildlife Refuge; by revising paragraph C of Charles M. Russell National Wildlife Refuge; by revising paragraph D. of Lamesteer National Wildlife Refuge; by revising paragraph D. of Medicine Lake National Wildlife Refuge and revising paragraph C of UL Bend National Wildlife Refuge to read as follows:

* * * * *

§ 32.45 Montana.

* * * * *

Benton Lake National Wildlife Refuge

A. Hunting of Migratory Game Birds. Hunters may hunt migratory game birds on designated areas of the refuge in accordance with maps and brochures available at refuge headquarters and signs posted on the area.

B. Upland Game Hunting. Hunters may hunt upland game on designated areas of the refuge in accordance with maps and brochures available at refuge headquarters and signs posted on the area.

* * * * *

D. Sport Fishing. Anglers may sport fish on designated areas of the refuge as posted by signs.

* * * * *

Charles M. Russell National Wildlife Refuge

* * * * *

C. Big Game Hunting. Hunters may hunt big game subject to refuge specific regulations as designated in refuge publications.

* * * * *

Lamesteer National Wildlife Refuge

* * * * *

D. Sport Fishing. Anglers may sport fish in accordance with state law.

* * * * *

Medicine Lake National Wildlife Refuge

* * * * *

D. Sport Fishing. Anglers may sport fish in accordance with state law and refuge restrictions as posted.

* * * * *

UL Bend National Wildlife Refuge

* * * * *

C. Big Game Hunting. Hunters may hunt big game subject to refuge-specific regulations as designated in refuge publications.

* * * * *

19. Section 32.46 *Nebraska* is amended by revising paragraph D of Crescent Lake National Wildlife Refuge; by revising paragraphs A., B., C., and D. of Valentine National Wildlife Refuge to read as follows:

§ 32.46 Nebraska.

* * * * *

Crescent Lake National Wildlife Refuge

* * * * *

D. Sport Fishing. Anglers may sport fish in accordance with state law and refuge restrictions as posted.

* * * * *

Valentine National Wildlife Refuge

A. Hunting of Migratory Game Birds. Hunters may hunt migratory birds on designated areas of the refuge subject to refuge specific regulations.

B. Upland Game Hunting. Hunters may hunt upland game on designated areas of the refuge subject to refuge specific regulations.

C. Big Game Hunting. Hunters may hunt big game on designated areas of the refuge subject to refuge specific regulations.

D. Sport Fishing. Anglers may fish in designated portions of the refuge subject to refuge specific regulations.

20. Section 32.47 *Nevada* is amended by revising paragraphs D.7 and D.8. of Ruby Lake National Wildlife Refuge; and revising paragraphs A., and D.1. of Sheldon National Wildlife Refuge to read as follows:

§ 32.47 Nevada.

* * * * *

Ruby Lake National Wildlife Refuge

* * * * *

D. Sport Fishing. * * *

* * * * *

7. Anglers may not store boats of any kind on the refuge from January 1 through May 31.

8. Anglers may wade and bank fish in the South Marsh only at Brown Dike, the Main Boat Landing, and Narciss Boat Landing from January 1 through July 31 annually. Anglers may wade and bank fish in the entire South Marsh, from August 1 through December 31, annually.

Sheldon National Wildlife Refuge

A. Hunting of Migratory Game Birds. Hunters may hunt geese, ducks, and coots on designated areas of the refuge in accordance with State law and subject to the following conditions:

1. Waterfowl and coot hunters shall possess and use, while in the field, only nontoxic shot.

2. Hunters may not use motorized boats.

* * * * *

D. Sport Fishing. * * *

1. Big Springs Reservoir, Dufurrena Ponds, and Catnip Reservoir—Anglers may bank fish, fish by wading, or use nonmotorized boats, boats with electric motors, float tubes and similar floatation devices only. Anglers may not fish from motorized boats.

* * * * *

21. Section 32.49 *New Jersey* is amended by adding paragraph A.4., of Cape May National Wildlife Refuge; and by revising paragraph C.2. and removing paragraph C.3. of Great Swamp National Wildlife Refuge to read as follows:

§ 32.49 New Jersey.

* * * * *

Cape May National Wildlife Refuge

A. Hunting of Migratory Game Birds. * * *

* * * * *

4. Hunters shall possess and use, while in the field, only nontoxic shot.

* * * * *

Great Swamp National Wildlife Refuge

* * * * *

C. Big Game Hunting. * * *

* * * * *

2. Hunters must wear in a conspicuous manner on head, chest and back a minimum of 400 square inches of solid-colored hunter orange clothing or material.

* * * * *

22. Section 32.51 *New York* is amended by adding Amagansett National Wildlife Refuge; revising paragraph D. of Montezuma National Wildlife Refuge; and by adding the alphabetical listings of Oyster Bay National Wildlife Refuge; Seatuck National Wildlife Refuge; and Target Rock National Wildlife Refuge to read as follows:

§ 32.51 New York.

* * * * *

Amagansett National Wildlife Refuge

A. Hunting of Migratory Game Birds. [Reserved]

B. Upland Game Hunting. [Reserved]

C. Big Game Hunting. [Reserved]

D. Sport Fishing. Anglers may surf fish in the Atlantic Ocean from the refuge shoreline in accordance with state regulations.

* * * * *

Montezuma National Wildlife Refuge

* * * * *

D. Sport Fishing. Anglers may access the New York State Barge Canal System waters at only three sites on the refuge: the Seneca River Fishing Access Site, the May's Point Fishing Area, and the Armitage Road Fishing Area. Anglers may either bank fish or boat fish, in accordance with state regulations.

Oyster Bay National Wildlife Refuge

A. Hunting of Migratory Game Birds. [Reserved]

B. Upland Game Hunting. [Reserved]

C. Big Game Hunting. [Reserved]

D. Sport Fishing. Anglers may fish in refuge-controlled waters of Oyster Bay. Anglers may also fish from designated areas on the refuge shoreline at Mill Pond during daylight hours. All fishing within the refuge is in accordance with state regulations.

Seatuck National Wildlife Refuge

A. Hunting of Migratory Game Birds. [Reserved]

B. Upland Game Hunting. [Reserved]

C. Big Game Hunting. [Reserved]

D. Sport Fishing. Anglers may fish in refuge-controlled waters of Great South Bay from boats only. All fishing is in accordance with state regulations.

Target Rock National Wildlife Refuge

A. Hunting of Migratory Game Birds. [Reserved]

B. Upland Game Hunting. [Reserved]

C. Big Game Hunting. [Reserved]

D. Sport Fishing. Anglers may fish in Huntington Bay from the refuge shoreline when the refuge is open to visitors. All fishing is in accordance with state regulations.

* * * * *

23. Section 32.52 *North Carolina* is amended by revising paragraph D. of Pocosin Lakes National Wildlife Refuge to read as follows:

§ 32.52 North Carolina.

* * * * *

Pocosin Lakes National Wildlife Refuge

* * * * *

D. Sport Fishing. Anglers may fish in designated areas of the refuge subject to the following conditions:

1. The refuge portion of New Lake and the Pungo Lake is open to fishing from March 1 to November 1. The public may not access the refuge portion of New Lake and Pungo Unit during the period from November 2 to the end of February. Anglers may fish in all other refuge waters year round.

2. Anglers may bank fish only in the Pungo Unit.

3. Anglers may only fish from sunrise to sunset.

4. Boats may not be left on the refuge overnight.

* * * * *

24. Section 32.53 *North Dakota* is amended by revising paragraph D. of Arrowwood National Wildlife Refuge; by revising paragraph D. of Audubon National Wildlife Refuge; by revising paragraph B and C introductory text, revising paragraphs C.1. and C.2., and removing paragraph C.3. of Des Lacs National Wildlife Refuge; by revising paragraph B.1. of Lake Zahl National Wildlife Refuge; by revising paragraph B. of Tewaukon National Wildlife Refuge; and by adding paragraph B.3. of Upper Souris National Wildlife Refuge to read as follows:

§ 32.53 North Dakota.

* * * * *

Arrowwood National Wildlife Refuge

* * * * *

D. Sport Fishing. Anglers may sport fish in accordance with state law and refuge restrictions as posted.

Audubon National Wildlife Refuge

* * * * *

D. Sport Fishing. Anglers may sport fish in accordance with state law and refuge restrictions as posted.

* * * * *

Des Lacs National Wildlife Refuge

* * * * *

B. Upland Game Hunting. Hunters may hunt ringnecked pheasants, sharp-tailed grouse, gray partridge, turkey, cottontail rabbit, jackrabbits, snowshoe hares and fox on designated areas of the refuge subject to the following conditions:

* * * * *

C. Big Game Hunting. Hunters may hunt deer on designated areas of the refuge subject to the following condition:

1. Archers may hunt throughout the entire State archery season.

2. Deer hunting with rifle and muzzleloader is subject to all State regulations and license units.

* * * * *

Lake Zahl National Wildlife Refuge

* * * * *

B. Upland Game Hunting. * * *

* * * * *

1. Hunters may only possess and use nontoxic shot.

* * * * *

Tewaukon National Wildlife Refuge

* * * * *

B. Hunters may hunt ring-necked pheasants on designated areas of the refuge subject to the following conditions:

1. Hunters may only possess and use nontoxic shot.

* * * * *

Upper Souris National Wildlife Refuge

* * * * *

B. Upland Game Hunting. * * *

* * * * *

3. Hunters may only possess and use nontoxic shot.

* * * * *

25. Section 32.55 *Oklahoma* is amended by revising paragraphs B. introductory text, B.1., B.3., B.4., and adding paragraph B.5. of Deep Fork National Wildlife Refuge; adding paragraphs A.4., A.5., revising paragraphs B.3. and B.4. of Little River National Wildlife Refuge; revising paragraphs B. introductory text, B.2., adding paragraph B.3.; and revising paragraph C. introductory text of Optima National Wildlife Refuge; revising paragraphs D.1. through D.6. and adding paragraphs D.7. through D.12. of Tishomingo National Wildlife Refuge; revising paragraph B. introductory text, adding paragraph B.2., revising paragraphs D.introductory text, D.1., D.2.; and removing paragraph D.4. of Washita National Wildlife Refuge; revising paragraph D.5. of Wichita Mountains Wildlife Refuge to read as follows:

§ 32.55 Oklahoma.

* * * * *

Deep Fork National Wildlife Refuge

* * * * *

B. Upland Game Hunting. Hunters may hunt rabbits, squirrels and raccoons on portions of the refuge in accordance with state hunting regulations subject to the following exceptions and conditions:

1. Hunters may hunt squirrels on portions of Deep Fork National Wildlife Refuge during the state season except the refuge is closed during the first half of archery deer season through rifle deer season and spring turkey season.

* * * * *

3. Hunters may only use shotguns with #4 or smaller, non-toxic shot.

4. The refuge leaflet designates all hunting and parking areas.

5. Hunters may hunt raccoons on portions of Deep Fork National Wildlife Refuge during January. Refuge permits required. Dogs allowed. Raccoon hunters may use mules only in one area as designated on refuge permit.

Little River National Wildlife Refuge

A. Hunting of Migratory Game Birds. * * *

* * * * *

4. Hunters must carry refuge hunting permits.

5. Hunters may hunt waterfowl (ducks) only during designated refuge seasons.

B. Upland Game Hunting. * * *

* * * * *

3. Hunters may hunt upland game only during designated refuge seasons.

4. Hunters shall possess and use, while in the field, only nontoxic shot.

* * * * *

Optima National Wildlife Refuge

* * * * *

B. Upland Game Hunting. Hunters may hunt pheasants, bobwhite and scaled quail, cottontail rabbit and jackrabbit on the refuge in accordance with State hunting regulations subject to the following conditions:

* * * * *

2. Closed during the State gun deer season.

3. Hunting ends at 4:30 p.m. daily.

C. Big Game Hunting. Hunters may hunt white-tailed deer, mule deer and turkey on the refuge in accordance with State hunting regulations subject to the following conditions:

* * * * *

Tishomingo National Wildlife Refuge

* * * * *

D. Sport Fishing. * * *

1. Anglers may bank and wade fish with pole and line or rod and reel year-round in areas open for public fishing access.

2. Anglers may use boats from March 1 through September 30 in designated refuge waters and Wildlife Management Unit.

3. Anglers may use trotlines and other set tackle only in the Cumberland Pool and between the natural banks of the Washita River. Anglers must attach set tackle, used in Cumberland Pool, only to anchored floats.

4. Anglers may not use limblines, throwlines, juglines, and yo-yo's.

5. Anglers may not use any containers (jugs, bottles) as floats.

6. Anglers must remove fishing tackle at the end of the boating season.

7. Anglers may no-wake boat fish during the boating season with line and pole or rod and reel in: (a) open areas south and west of the Cumberland Pool shallow water buoy line; (b) lakes south and west of the Washita River; and (c) the Wildlife Management Unit.

8. Anglers may night fish from boat (during boating season) in the Cumberland Pool, except not in the no-wake area south and west of the buoy line. Anglers may night fish at the headquarters area, including Sandy Creek Bridge, Murray 23, Nida Point, and the Wildlife Management Unit.

9. Anglers may take bait for personal use while fishing in the refuge in accordance with Oklahoma State law.

10. Anglers may bow fish only in the Wildlife Management Unit.

11. Anglers may not take fish by the use of hands (noodling) in any refuge waters.

12. Anglers may not take frogs, turtles, or mussels.

* * * * *

Washita National Wildlife Refuge

* * * * *

B. Upland Game Hunting. Hunters may hunt quail and rabbit on designated

areas of the refuge in accordance with State hunting regulations subject to the following conditions:

* * * * *

2. Closed during the State gun deer season.

* * * * *

D. Sport Fishing. Anglers may fish in designated areas of the refuge in accordance with State fishing regulations subject to the following conditions:

1. Anglers may fish from March 15 through October 14 in the Washita River and Foss Reservoir. Anglers may bank fish year round from the refuge boundary south of Lakeview Recreation to Pitts Creek Recreation Area.

2. Anglers may access fishing areas only from designated parking areas and by boat from Foss Reservoir.

* * * * *

Wichita Mountains Wildlife Refuge

* * * * *

D. Sport Fishing. * * *

* * * * *

5. Anglers may use electric trolling motors on boats 14′ or less in length only on Jed Johnson, Rush, Quanah Parker and French Lakes.

* * * * *

26. Amend § 32.56 *Oregon* by revising paragraph B. of Hart Mountain National Wildlife Refuge, by revising paragraph D. of Lewis and Clark National Wildlife Refuge to read as follows:

§ 32.56 Oregon.

* * * * *

Hart Mountain National Wildlife Refuge

* * * * *

B. Upland Game Hunting. Hunters may hunt partridge and coyote on designated areas of the refuge.

* * * * *

Lewis and Clark National Wildlife Refuge

* * * * *

D. Sport Fishing. Anglers may fish in designated areas of the refuge.

* * * * *

27. Section 32.57 *Pennsylvania* is amended by revising the heading of Tinicum National Environmental Center to read as follows:

§ 32.57 Pennsylvania.

* * * * *

John Heinz National Wildlife Refuge at Tinicum

* * * * *

28. Section 32.59 *Rhode Island* is amended by adding an introductory paragraph; by adding the alphabetical listing of Block Island National Wildlife Refuge, Ninigret National Wildlife Refuge, Pettaquamscutt Cove National Wildlife Refuge, Sachuest Point National Wildlife Refuge, and Trustom Pond National Wildlife Refuge to read as follows:

§ 32.59 Rhode Island.

The following refuge units have been opened for hunting and/or fishing and are listed in alphabetical order with applicable refuge-specific regulations.

Block Island National Wildlife Refuge

A. Hunting of Migratory Game Birds. [Reserved]

B. Upland Game Hunting. [Reserved]

C. Big Game Hunting. [Reserved]

D. Sport Fishing. Anglers may surf fish in the Atlantic Ocean from the refuge shoreline in accordance with state regulations.

Ninigret National Wildlife Refuge

A. Hunting of Migratory Game Birds. [Reserved]

B. Upland Game Hunting. [Reserved]

C. Big Game Hunting. [Reserved]

D. Sport Fishing. Anglers may surf fish in the Atlantic Ocean from the refuge shoreline in accordance with state regulations. Anglers may saltwater fish and shellfish in Ninigret Pond from the refuge shoreline only from sunrise to sunset in accordance with state and refuge regulations.

Pettaquamscutt Cove National Wildlife Refuge

A. Hunting of Migratory Game Birds. [Reserved]

B. Upland Game Hunting. [Reserved]

C. Big Game Hunting. [Reserved]

D. Sport Fishing. Anglers may saltwater fish from the refuge shoreline in accordance with state regulations.

Sachuest Point National Wildlife Refuge

A. Hunting of Migratory Game Birds. [Reserved]

B. Upland Game Hunting. [Reserved]

C. Big Game Hunting. [Reserved]

D. Sport Fishing. Anglers may surf fish in the Atlantic Ocean and Sakonnet River from the refuge shoreline in accordance with state regulations. Additionally, anglers may night-fish after sunset in accordance with state regulations.

Trustom Pond National Wildlife Refuge

A. Hunting of Migratory Game Birds. Hunters may hunt Canada geese and mourning doves on designated areas of the refuge subject to the following conditions: State permits required.

B. Upland Game Hunting. [Reserved]

C. Big Game Hunting. [Reserved]

D. Sport Fishing. Anglers may surf fish in the Atlantic Ocean from the refuge shoreline from September 16 to March 31 in accordance with state and refuge regulations.

29. Section 32.60 *South Carolina* is amended by revising paragraph A. of Ace Basin National Wildlife Refuge to read as follows:

§ 32.60 South Carolina.

* * * * *

Ace Basin National Wildlife Refuge

A. Hunting of Migratory Game Birds. Hunters may hunt ducks, geese, and coots on designated areas of the refuge subject to the following condition: Refuge hunting permits required.

* * * * *

30. Section 32.62 *Tennessee* is amended by revising paragraph C. of Lake Isom National Wildlife Refuge; and adding paragraph D.5. of Lower Hatchie National Wildlife Refuge to read as follows:

§ 32.62 Tennessee.

* * * * *

Lake Isom National Wildlife Refuge

* * * * *

C. Big Game Hunting. Hunters may hunt white-tailed deer with archery equipment on designated areas of the refuge subject to the following condition: Refuge permits required.

* * * * *

Lower Hatchie National Wildlife Refuge

* * * * *

D. Sport Fishing. * * *

* * * * *

5. Anglers may only use non-motorized boats and boats with electric motors on Sunk Lake Public Use Natural Area.

* * * * *

31. Section 32.63 *Texas* is amended by revising paragraphs B.1., and C.1. of Balcones Canyonlands National Wildlife Refuge to read as follows:

§ 32.63 Texas.

* * * * *

Balcones Canyonlands National Wildlife Refuge

* * * * *

B. Upland Game Hunting. * * *

1. Hunting will take place in November, December, and/or January.

* * * * *

C. Big Game Hunting. * * *

1. Hunting will take place in November, December, and/or January.

* * * * *

32. Section 32.64 *Utah* is amended by adding paragraphs A.9., A.10., and B.2. of Bear River Migratory Bird Refuge to read as follows:

§ 32.64 Utah.

* * * * *

Bear River Migratory Bird Refuge

A. Hunting of Migratory Game Birds. * * *

* * * * *

9. When hunters are in their vehicles, at parking lots, or traveling on Refuge roads, all firearms must be completely unloaded (including the magazine) and cased or dismantled.

10. Beginning November 1st through the end of swan season, the northwest section of Unit 2 (as designated on the map in the Refuge hunting brochure and posted in the field) is restricted to only hunters who possess a Utah State Swan permit, and they may not possess or use more than ten (10) shells per day.

B. Upland game hunting. * * *

* * * * *

2. Pheasants may not be taken with a shotgun of any description capable of holding more than three shells, unless it is plugged with a one-piece filler, incapable of removal without disassembling the gun, so its total capacity does not exceed three shells.

* * * * *

33. Section 32.66 *Virginia* is amended by revising the introductory text of paragraph C., and adding paragraph C.8. of Great Dismal Swamp National Wildlife Refuge to read as follows:

§ 32.66 Virginia.

* * * * *

Great Dismal Swamp National Wildlife Refuge

* * * * *

C. Big Game Hunting. Hunters may hunt deer and bear on designated areas of the refuge subject to the following conditions:

* * * * *

8. Hunters may not possess alcoholic beverages.

* * * * *

34. Section 32.67 *Washington* is amended by adding the alphabetical listing of Dungeness National Wildlife Refuge and Nisqually National Wildlife Refuge; adding paragraphs A.6., and B.5. of Toppenish National Wildlife Refuge; amended by adding paragraph C. of Umatilla National Wildlife Refuge to read as follows:

§ 32.67 Washington.

* * * * *

Dungeness National Wildlife Refuge

A. Hunting of Migratory Game Birds. [Reserved]

B. Upland Game Hunting. [Reserved]

C. Big Game Hunting. [Reserved]

D. Sport Fishing. Anglers may salt water fish in designated areas of the refuge.

* * * * *

Nisqually National Wildlife Refuge

A. Hunting of Migratory Game Birds. [Reserved]

B. Upland Game Hunting. [Reserved]

C. Big Game Hunting. [Reserved]

D. Sport Fishing. Anglers may salt water fish in designated areas of the refuge.

* * * * *

Toppenish National Wildlife Refuge

A. Hunting of Migratory Game Birds. * * *

* * * * *

6. Hunters may hunt on Wednesdays, Saturdays, Sundays, Thanksgiving day, Christmas day, and New Years day only.

B. Upland Game Hunting. * * *

* * * * *

5. Hunters may hunt on Wednesdays, Saturdays, Sundays, Thanksgiving day, Christmas day, and New Years day only.

* * * * *

Umatilla National Wildlife Refuge

C. Big Game Hunting. Hunters may hunt deer on designated areas of the refuge subject to the following condition:

1. Hunting by permit only.

* * * * *

35. Section 32.68 *West Virginia* is amended by alphabetically listing Canaan Valley National Wildlife Refuge to read as follows:

§ 32.68 West Virginia.

* * * * *

Canaan Valley National Wildlife Refuge

A. Hunting of Migratory Game Birds. Hunters may hunt migratory game birds on designated areas of the refuge subject to the following conditions:

1. Hunters must sign and be in the possession of a refuge conditional hunting permit at all times while hunting on the refuge.

B. Upland Game Hunting. Hunters may hunt upland (small) game on designated areas of the refuge subject to the following conditions:

1. Hunters must sign and be in the possession of a refuge conditional hunting permit at all times while hunting on the refuge.

2. Shotgun hunters may use or possess only nontoxic shot while hunting upland (small) game on the refuge.

C. Big Game Hunting. Hunters may hunt big game on designated areas of the refuge subject to the following conditions:

1. Hunters must sign and be in the possession of a refuge conditional hunting permit at all times while hunting on the refuge.

D. Sport Fishing. [Reserved.]

* * * * *

36. Section 32.69 *Wisconsin* is amended by adding paragraph B.4., and revising paragraph C.5. of Necedah National Wildlife Refuge to read as follows:

§ 32.69 Wisconsin.

* * * * *

Necedah National Wildlife Refuge

* * * * *

B. Upland Game Hunting. * * *

* * * * *

4. Dogs may be used only when hunting upland game birds and waterfowl.

C. Big Game Hunting. * * *

5. Refuge Area 3 is open to deer hunting during the state's gun, muzzle loader, and late archery season.

* * * * *

37. Section 32.71 *Pacific Islands Territory* is amended by adding the alphabetical listing of Guam National Wildlife Refuge, Kilauea Point National Wildlife Refuge, and Midway Atoll National Wildlife Refuge to read as follows:

§ 32.71 Pacific Islands Territory.

* * * * *

Guam National Wildlife Refuge

A. Hunting of Migratory Game Birds. [Reserved]

B. Upland Game Hunting. [Reserved]

C. Big Game Hunting. [Reserved]

D. Sport Fishing. Anglers may fish and collect marine life on designated areas of the Refuge only in accordance with Refuge Fishing Regulations leaflet available at Refuge Headquarters. The use of gill nets for catching reef fish will be prohibited after December 31, 1998.

* * * * *

Kilauea Point National Wildlife Refuge

A. Hunting of Migratory Game Birds. [Reserved]

B. Upland Game Hunting. [Reserved]

C. Big Game Hunting. [Reserved]

D. Sport Fishing. Anglers may salt water fish in designated areas of the refuge.

Midway Atoll National Wildlife Refuge

A. Hunting of Migratory Game Birds. [Reserved]

B. Upland Game Hunting. [Reserved]

C. Big Game Hunting. [Reserved]

D. Sport Fishing. Anglers may fish and lobster only in accordance with a refuge fishing leaflet available at refuge headquarters.

Dated: August 27, 1998.

Donald Barry,

Assistant Secretary for Fish and Wildlife and Parks.

[FR Doc. 98–23564 Filed 9–2–98; 8:45 am]

BILLING CODE 4310–55–U

Proposed Rules

Federal Register
Vol. 63, No. 171
Thursday, September 3, 1998

This section of the FEDERAL REGISTER contains notices to the public of the proposed issuance of rules and regulations. The purpose of these notices is to give interested persons an opportunity to participate in the rule making prior to the adoption of the final rules.

DEPARTMENT OF TRANSPORTATION

Federal Aviation Administration

14 CFR Part 39

[Docket No. 98–NM–88–AD]

RIN 2120–AA64

Airworthiness Directives; Dornier Model 328–100 Series Airplanes

AGENCY: Federal Aviation Administration, DOT.

ACTION: Notice of proposed rulemaking (NPRM).

SUMMARY: This document proposes the adoption of a new airworthiness directive (AD) that is applicable to certain Dornier Model 328–100 series airplanes. This proposal would require the installation of certain rivets on support arm 2 of the left and right flaps. This proposal is prompted by issuance of mandatory continuing airworthiness information by a foreign civil airworthiness authority. The actions specified by the proposed AD are intended to prevent fatigue cracking of the support arms of the flaps, which could result in reduced structural integrity of the airplane.

DATES: Comments must be received by October 5, 1998.

ADDRESSES: Submit comments in triplicate to the Federal Aviation Administration (FAA), Transport Airplane Directorate, ANM–114, Attention: Rules Docket No. 98–NM–88–AD, 1601 Lind Avenue, SW., Renton, Washington 98055–4056. Comments may be inspected at this location between 9:00 a.m. and 3:00 p.m., Monday through Friday, except Federal holidays.

The service information referenced in the proposed rule may be obtained from Fairchild Dornier, Dornier Luftfahrt GmbH, P.O. Box 1103, D–82230 Wessling, Germany. This information may be examined at the FAA, Transport Airplane Directorate, 1601 Lind Avenue, SW., Renton, Washington.

FOR FURTHER INFORMATION CONTACT: Norman B. Martenson, Manager, International Branch, ANM–116, FAA, Transport Airplane Directorate, 1601 Lind Avenue, SW., Renton, Washington 98055–4056; telephone (425) 227–2110; fax (425) 227–1149.

SUPPLEMENTARY INFORMATION:

Comments Invited

Interested persons are invited to participate in the making of the proposed rule by submitting such written data, views, or arguments as they may desire. Communications shall identify the Rules Docket number and be submitted in triplicate to the address specified above. All communications received on or before the closing date for comments, specified above, will be considered before taking action on the proposed rule. The proposals contained in this notice may be changed in light of the comments received.

Comments are specifically invited on the overall regulatory, economic, environmental, and energy aspects of the proposed rule. All comments submitted will be available, both before and after the closing date for comments, in the Rules Docket for examination by interested persons. A report summarizing each FAA-public contact concerned with the substance of this proposal will be filed in the Rules Docket.

Commenters wishing the FAA to acknowledge receipt of their comments submitted in response to this notice must submit a self-addressed, stamped postcard on which the following statement is made: ''Comments to Docket Number 98–NM–88–AD.'' The postcard will be date stamped and returned to the commenter.

Availability of NPRMs

Any person may obtain a copy of this NPRM by submitting a request to the FAA, Transport Airplane Directorate, ANM–114, Attention: Rules Docket No. 98–NM–88–AD, 1601 Lind Avenue, SW., Renton, Washington 98055–4056.

Discussion

The Luftfahrt-Bundesamt (LBA), which is the airworthiness authority for Germany, notified the FAA that an unsafe condition may exist on certain Dornier Model 328–100 series airplanes. The LBA advises that, during manufacture of support arm 2 of the flaps, certain rivets on the support arm were not installed as specified in the design drawing. This condition, if not corrected, could result in fatigue cracking of support arm 2 of the flaps, and consequent reduced structural integrity of the airplane.

Explanation of Relevant Service Information

The manufacturer has issued Dornier Service Bulletin SB–328–57–239, dated July 7, 1997, which describes procedures for installing two additional rivets on support arm 2 of the left and right flaps. Accomplishment of the action specified in the service bulletin is intended to adequately address the identified unsafe condition. The LBA classified this service bulletin as mandatory and issued German airworthiness directive 97–328, dated November 20, 1997, in order to assure the continued airworthiness of these airplanes in Germany.

FAA's Conclusions

This airplane model is manufactured in Germany and is type certificated for operation in the United States under the provisions of section 21.29 of the Federal Aviation Regulations (14 CFR 21.29) and the applicable bilateral airworthiness agreement. Pursuant to this bilateral airworthiness agreement, the LBA has kept the FAA informed of the situation described above. The FAA has examined the findings of the LBA, reviewed all available information, and determined that AD action is necessary for products of this type design that are certificated for operation in the United States.

Explanation of Requirements of Proposed Rule

Since an unsafe condition has been identified that is likely to exist or develop on other airplanes of the same type design registered in the United States, the proposed AD would require accomplishment of the actions specified in the service bulletin described previously.

Cost Impact

The FAA estimates that 8 airplanes of U.S. registry would be affected by this proposed AD, that it would take approximately 4 work hours per airplane to accomplish the proposed actions, and that the average labor rate is $60 per work hour. Based on these figures, the cost impact of the proposed

AD on U.S. operators is estimated to be $1,920, or $240 per airplane.

The cost impact figure discussed above is based on assumptions that no operator has yet accomplished any of the proposed requirements of this AD action, and that no operator would accomplish those actions in the future if this AD were not adopted.

Regulatory Impact

The regulations proposed herein would not have substantial direct effects on the States, on the relationship between the national government and the States, or on the distribution of power and responsibilities among the various levels of government. Therefore, in accordance with Executive Order 12612, it is determined that this proposal would not have sufficient federalism implications to warrant the preparation of a Federalism Assessment.

For the reasons discussed above, I certify that this proposed regulation (1) is not a ''significant regulatory action'' under Executive Order 12866; (2) is not a ''significant rule'' under the DOT Regulatory Policies and Procedures (44 FR 11034, February 26, 1979); and (3) if promulgated, will not have a significant economic impact, positive or negative, on a substantial number of small entities under the criteria of the Regulatory Flexibility Act. A copy of the draft regulatory evaluation prepared for this action is contained in the Rules Docket. A copy of it may be obtained by contacting the Rules Docket at the location provided under the caption **ADDRESSES.**

List of Subjects in 14 CFR Part 39

Air transportation, Aircraft, Aviation safety, Safety.

The Proposed Amendment

Accordingly, pursuant to the authority delegated to me by the Administrator, the Federal Aviation Administration proposes to amend part 39 of the Federal Aviation Regulations (14 CFR part 39) as follows:

PART 39—AIRWORTHINESS DIRECTIVES

1. The authority citation for part 39 continues to read as follows:

Authority: 49 U.S.C. 106(g), 40113, 44701.

§ 39.13 [Amended]

2. Section 39.13 is amended by adding the following new airworthiness directive:

Dornier Luftfahrt GMBH: Docket 98–NM–88–AD.

Applicability: Model 328–100 series airplanes, serial numbers 3064 through 3086 inclusive; certificated in any category.

Note 1: This AD applies to each airplane identified in the preceding applicability provision, regardless of whether it has been modified, altered, or repaired in the area subject to the requirements of this AD. For airplanes that have been modified, altered, or repaired so that the performance of the requirements of this AD is affected, the owner/operator must request approval for an alternative method of compliance in accordance with paragraph (b) of this AD. The request should include an assessment of the effect of the modification, alteration, or repair on the unsafe condition addressed by this AD; and, if the unsafe condition has not been eliminated, the request should include specific proposed actions to address it.

Compliance: Required as indicated, unless accomplished previously.

To prevent fatigue cracking of the support arms of the flaps, which could result in reduced structural integrity of the airplane, accomplish the following:

(a) Prior to the accumulation of 10,000 total flight cycles, or within 500 flight cycles after the effective date of this AD, whichever occurs later, install rivets on support arm 2 of the left and right flaps, in accordance with Dornier Service Bulletin SB–328–57–239, dated July 7, 1997.

(b) An alternative method of compliance or adjustment of the compliance time that provides an acceptable level of safety may be used if approved by the Manager, International Branch, ANM–116, FAA, Transport Airplane Directorate. Operators shall submit their requests through an appropriate FAA Principal Maintenance Inspector, who may add comments and then send it to the Manager, International Branch, ANM–116.

Note 2: Information concerning the existence of approved alternative methods of compliance with this AD, if any, may be obtained from the International Branch, ANM–116.

(c) Special flight permits may be issued in accordance with sections 21.197 and 21.199 of the Federal Aviation Regulations (14 CFR 21.197 and 21.199) to operate the airplane to a location where the requirements of this AD can be accomplished.

Note 3: The subject of this AD is addressed in German airworthiness directive 97–328, dated November 20, 1997.

Issued in Renton, Washington, on August 28, 1998.

Vi L. Lipski,

Acting Manager, Transport Airplane Directorate, Aircraft Certification Service.

[FR Doc. 98–23744 Filed 9–2–98; 8:45 am]

BILLING CODE 4910–13–U

DEPARTMENT OF TRANSPORTATION

Federal Aviation Administration

14 CFR Part 39

[Docket No. 98–NM–143–AD]

RIN 2120–AA64

Airworthiness Directives; de Havilland Model DHC–7 Series Airplanes

AGENCY: Federal Aviation Administration, DOT.

ACTION: Notice of proposed rulemaking (NPRM).

SUMMARY: This document proposes the supersedure of an existing airworthiness directive (AD), applicable to all de Havilland Model DHC–7 series airplanes, that currently requires certain structural inspections, and repair, if necessary. This action would require certain structural inspection. This proposal is prompted by issuance of mandatory continuing airworthiness information by a foreign civil airworthiness authority. The actions specified by the proposed AD are intended to detect and correct fatigue cracking in certain significant structural areas, which could reduce the structural integrity of these airplanes.

DATES: Comments must be received by October 5, 1998.

ADDRESSES: Submit comments in triplicate to the Federal Aviation Administration (FAA), Transport Airplane Directorate, ANM–114, Attention: Rules Docket No. 98–NM–143–AD, 1061 Lind Avenue, SW., Renton, Washington 98055–4056. Comments may be inspected at this location between 9:00 a.m. and 3:00 p.m., Monday through Friday, except Federal holidays.

The service information referenced in the proposed rule may be obtained from Bombardier, Inc., Bombardier Regional Aircraft Division, Garratt Boulevard, Downsview, Ontario M3K 1Y5, Canada. This information may be examined at the FAA, Transport Airplane Directorate, 1601 Lind Avenue, SW., Renton, Washington; or at the FAA, Engine and Propeller Directorate, New York Aircraft Certification Office, 10 Fifth Street, Third Floor, Valley Stream, New York.

FOR FURTHER INFORMATION CONTACT: Serge Napoleon, Aerospace Engineer, Airframe and Propulsion Branch, ANE–171, FAA, Engine and Propeller Directorate, New York Aircraft Certification Office, 10 Fifth Street, Third Floor, Valley Stream, New York 11581; telephone (516) 256–7512; fax (516) 568–2716.

SUPPLEMENTARY INFORMATION:

Comments Invited

Interested persons are invited to participate in the making of the proposed rule by submitting such written data, views, or arguments as they may desire. Communications shall identify the Rules Docket number and be submitted in triplicate to the address specified above. All communications received on or before the closing date for comments, specified above, will be considered before taking action on the proposed rule. The proposals contained in this notice may be changed in light of the comments received.

Comments are specifically invited on the overall regulatory, economic, environmental, and energy aspects of the proposed rule. All comments submitted will be available, both before and after the closing date for comments, in the Rules Docket for examination by interested persons. A report summarizing each FAA-public contact concerned with the substance of this proposal will be filed in the Rules Docket.

Commenters wishing the FAA to acknowledge receipt of their comments submitted in response to this notice must submit a self-addressed, stamped postcard on which the following statement is made: ''Comments to Docket Number 98–NM–143–AD.'' The postcard will be date stamped and returned to the commenter.

Availability of NPRMs

Any person may obtain a copy of this NPRM by submitting a request to the FAA, Transport Airplane Directorate, ANM–114, Attention: Rules Docket No. 98–NM–143–AD, 1601 Lind Avenue, SW., Renton, Washington 98055–4056.

Discussion

On March 6, 1997, the FAA issued AD 97–06–08, amendment 39–9965 (62 FR 12531, March 17, 1997), applicable to all de Havilland Model DHC–7 series airplanes, to require certain structural inspections, and repair, if necessary. That action was prompted by a structural re-evaluation, which identified certain significant structural items to inspect for fatigue cracking as these airplanes approach and exceed the manufacturer's original design life. The requirements of that AD are intended to prevent fatigue cracking in these areas which, if not detected and corrected in a timely manner, could reduce the structural integrity of these airplanes.

Actions Since Issuance of Previous Rule

Since the issuance of AD 97–06–08, which identified six significant structural areas for repetitive structural inspections to detect fatigue cracking, Transport Canada Aviation (TCA), which is the airworthiness authority for the Canada, identified a seventh area that also requires repetitive structural inspections to detect fatigue cracking. Such cracking, if not detected and corrected in a timely manner, could reduce the structural integrity of these airplanes.

Explanation of Relevant Service Information

The manufacturer has issued de Havilland Dash 7 Maintenance Manual, Product Support Manual (PSM) 1–7–2, Chapter 5, Section 5–60–00, Temporary Revisions (TR) 5–99 and 5–97, both dated December 22, 1997, which describe procedures for Supplementary Inspection Program (SIP) tasks for the additional inspection to detect cracks in the fastener holes located on the left and right wing at stringers 6 and 8. Accomplishment of this inspection will ensure the continued structural airworthiness of Model DHC–7 series airplanes. TCA classified these TR's as mandatory and issued Canadian airworthiness directive CF–94–19R1, dated January 26, 1998, in order to assure the continued airworthiness of these airplanes in Canada.

FAA's Conclusions

This airplane model is manufactured in Canada and is type certificated for operation in the United States under the provisions of section 21.29 of the Federal Aviation Regulations (14 CFR 21.29) and the applicable bilateral airworthiness agreement. Pursuant to this bilateral airworthiness agreement, TCA has kept the FAA informed of the situation described above. The FAA has examined the findings of TCA, reviewed all available information, and determined that AD action is necessary for products of this type design that are certificated for operation in the United States.

Explanation of Requirements of Proposed Rule

Since an unsafe condition has been identified that is likely to exist or develop on other airplanes of the same type design registered in the United State, the proposed AD would supersede AD 97–06–08 to continue to require certain structural inspections, and repair, if necessary. This proposed action also would require an additional structural inspection to detect cracks in the fastener holes located on the left and right wing at stringers 6 and 8. The actions would be required to be accomplished in accordance with the service information described previously.

Cost Impact

There are approximately 50 airplanes of U.S. registry that would be affected by this proposed AD.

The inspections that are currently required by AD 97–06–08, and retained in this AD, take approximately 15 work hours per airplane to accomplish, at an average labor rate of $60 per work hour. Based on these figures, the cost impact of the currently required actions on U.S. operators is estimated to be $45,000, or $900 per airplane, per inspection cycle.

The new inspection that is proposed in this AD action would take approximately 3 work hours per airplane to accomplish, at an average labor rate $60 per work hour. Based on these figures, the cost impact of the proposed requirements of this AD on U.S. operators is estimated to be $9,000, or $180 per airplane, per inspection cycle.

The cost impact figures discussed above are based on assumptions that no operator has yet accomplished any of the current or proposed requirements of this AD action, and that no operator would accomplish those actions in the future if this AD were not adopted.

Regulatory Impact

The regulations proposed herein would not have substantial direct effects on the States, on the relationship between the national government and the States, or on the distribution of power and responsibilities among the various levels of government. Therefore, in accordance with Executive Order 12612, it is determined that this proposal would not have sufficient federalism implications to warrant the preparation of a Federalism Assessment.

For the reasons discussed above, I certify that this proposed regulation (1) is not a ''significant regulatory action'' under Executive Order 12866; (2) is not a ''significant rule'' under the DOT Regulatory Policies and Procedures (44 FR 11034, February 26, 1979); and (3) if promulgated, will not have a significant economic impact, positive or negative, on a substantial number of small entities under the criteria of the Regulatory Flexibility Act. A copy of the draft regulatory evaluation prepared for this action is contained in the Rules Docket. A copy of it may be obtained by contacting the Rules Docket at the location provided under the caption **ADDRESSES.**

List of Subjects in 14 CFR Part 39

Air transportation, Aircraft, Aviation safety, Safety.

The Proposed Amendment

Accordingly, pursuant to the authority delegated to me by the Administrator, the Federal Aviation Administration proposes to amend part 39 of the Federal Aviation Regulations (14 CFR part 39) as follows:

PART 39—AIRWORTHINESS DIRECTIVES

1. The authority citation for part 39 continues to read as follows:

Authority: 49 U.S.C. 106(g), 40113, 44701.

§ 39.13 [Amended]

2. Section 39.13 is amended by removing amendment 39–9965 (62 FR 12531, March 17, 1997), and by adding a new airworthiness directive (AD), to read as follows:

De Havilland Inc.: Docket 98–NM–143–AD. Supersedes AD 97–06–08, Amendment 39–9965.

Applicability: All Model DHC–7 series airplanes, certificated in any category.

Note 1: This AD applies to each airplane identified in the preceding applicability provision, regardless of whether it has been modified, altered, or repaired in the area subject to the requirements of this AD. For airplanes that have been modified, altered, or repaired so that the performance of the requirements of this AD is affected, the owner/operator must request approval for an alternative method of compliance in accordance with paragraph (f) of this AD. The request should include an assessment of the effect of the modification, alteration, or repair on the unsafe condition addressed by this AD; and, if the unsafe condition has not been eliminated, the request should include specific proposed actions to address it.

Compliance: Required as indicated, unless accomplished previously.

To ensure the continued structural integrity of these airplanes, accomplish the following:

Restatement of Requirements of AD 97–06–08, Amendment 39–9965

(a) Within 6 months after April 21, 1997 (the effective date of AD 97–06–08, amendment 39–9965), incorporate into the FAA-approved maintenance inspection program the inspections and inspection intervals defined in DHC–7 Maintenance Manual (PSM 1–7–2), Chapter 5, Section 5–06–00, Temporary Revision (TR 5–84), dated June 15, 1994; and inspect the significant structural items prior to the thresholds specified in TR 5–84 of PSM 1–7–2. Repeat the inspections thereafter at the intervals specified in TR 5–84 of PSM 1–7–2.

(b) Prior to further flight, repair any discrepancies detected during any inspection required by paragraph (a) of this AD in accordance with one of the following:

(1) The DHC–7 Maintenance Manual; or

(2) The DHC–7 Structural Repair Manual; or

(3) Other data meeting the certification basis of the airplane which is approved by the Manager, New York Aircraft Certification Office (ACO), FAA, Engine and Propeller Directorate; or

(4) Data meeting the certification basis of the airplane which is approved by Transport Canada Aviation.

New Requirements of This AD

(c) Incorporate into the FAA-approved maintenance inspection program the inspections and inspection intervals defined in the DHC–7 Maintenance Manual PSM 1–7–2, Supplementary Inspection Program (SIP), Chapter 5, Section 5–60–00, Temporary Revision (TR 5–99), dated December 22, 1997, at the applicable time specified in paragraph (c)(1) or (c)(2) of this AD; and inspect the significant structural items prior to the thresholds specified in TR 5–99 of PSM 1–7–2. Thereafter, repeat the inspection at the intervals specified in TR 5–99 of PSM 1–7–2.

(1) For airplanes that have accumulated 38,000 or more total flight cycles as of the effective date of this AD: Incorporate within 2,000 flight cycles after the effective date of this AD.

(2) For airplanes that have accumulated less than 38,000 total flight cycles as of the effective date of this AD: Incorporate prior to the accumulation of 40,000 total flight cycles.

(d) Incorporate into the FAA-approved maintenance inspection program the inspections and inspection intervals as defined in the DHC–7 Maintenance Manual, Chapter 5, Section 5–60–00, (PSM 1–7–2), Supplementary Inspection Program (SIP), Temporary Revision TR 5–97, dated December 22, 1997, at the applicable time specified in paragraph (d)(1) or (d)(2) of this AD; and inspect the significant structural items prior to the thresholds specified in TR 5–97 of PSM 1–7–2. Thereafter, repeat the inspection at the intervals specified in TR 5–99 of PSM 1–7–2.

(1) For airplanes that have accumulated 19,000 or more total flight cycles as of the effective date of this AD: Incorporate within 1,000 flight cycles after the effective date of this AD.

(2) For airplanes that have accumulated less than 19,000 total flight cycles as of the effective date of this AD: Incorporate prior to the accumulation of 20,000 total flight cycles.

(e) All inspection results, positive or negative, must be reported to de Havilland in accordance with ''Introduction,'' paragraph 5, of DHC–7 Maintenance Manual (PSM 1–7–2), Chapter 5, Section 5–60–00, Temporary Revision (TR 5–84), dated June 15, 1994. Information collection requirements contained in this regulation have been approved by the Office of Management and Budget (OMB) under the provisions of the Paperwork Reduction Act of 1980 (44 U.S.C. 3501 et seq.) and have been assigned OMB Control Number 2120–0056.

(f) An alternative method of compliance or adjustment of the compliance time that provides an acceptable level of safety may be used if approved by the Manager, New York Aircraft Certification Office (ACO), FAA, Engine and Propeller Directorate. Operators shall submit their requests through an appropriate FAA Principal Maintenance Inspector, who may add comments and then send it to the Manager, New York ACO.

Note 2: Information concerning the existence of approved alternative methods of compliance with this AD, if any, may be obtained from the New York ACO.

(g) Special flight permits may be issued in accordance with sections 21.197 and 21.199 of the Federal Aviation Regulations (14 CFR 21.197 and 21.199) to operate the airplane to a location where the requirements of this AD can be accomplished.

Note 3: The subject of this AD is addressed in Canadian airworthiness directive CF–94–19R1, dated January 26, 1998.

Issued in Renton, Washington, on August 28, 1998.

Vi L. Lipski,

Acting Manager, Transport Airplane Directorate, Aircraft Certification Service.

[FR Doc. 98–23743 Filed 9–2–98; 8:45 am]

BILLING CODE 4910–13–M

DEPARTMENT OF TRANSPORTATION

Federal Aviation Administration

14 CFR Part 39

[Docket No. 98–NM–200–AD]

RIN 2120–AA64

Airworthiness Directives; Lockheed Model L–1011–385 Series Airplanes

AGENCY: Federal Aviation Administration, DOT.

ACTION: Notice of proposed rulemaking (NPRM).

SUMMARY: This document proposes the adoption of a new airworthiness directive (AD) that is applicable to all Lockheed Model L–1011–385 series airplanes. Among other things, this proposal would require repetitive leak tests of the lavatory drain systems and repair, if necessary; installation of a lever lock cap, vacuum breaker check valve or flush/fill line ball valve on the flush/fill line; periodic seal changes; and replacement of ''donut'' type waste drain valves installed in the waste drain system. This proposal is prompted by continuing reports of damage to engines, airframes, and to property on the ground, caused by ''blue ice'' that forms from leaking lavatory drain systems on transport category airplanes and subsequently dislodges from the airplane fuselage. The actions specified by this proposed AD are intended to prevent such damage associated with the problems of ''blue ice.''

DATES: Comments must be received by October 19, 1998.

ADDRESSES: Submit comments in triplicate to the Federal Aviation Administration (FAA), Transport Airplane Directorate, ANM–114, Attention: Rules Docket No. 98–NM–

200–AD, 1601 Lind Avenue, SW., Renton, Washington 98055–4056. Comments may be inspected at this location between 9:00 a.m. and 3:00 p.m., Monday through Friday, except Federal holidays.

This information may be examined at the FAA, Transport Airplane Directorate, 1601 Lind Avenue, SW., Renton, Washington; or at the FAA, Small Airplane Directorate, Atlanta Aircraft Certification Office, One Crown Center, 1895 Phoenix Boulevard, suite 450, Atlanta, Georgia.

FOR FURTHER INFORMATION CONTACT: Thomas Peters, Program Manager, Systems and Flight Test Branch, ACE–116A, FAA, Small Airplane Directorate, Atlanta Aircraft Certification Office, One Crown Center, 1895 Phoenix Boulevard, suite 450, Atlanta, Georgia 30337–2748; telephone (770) 703–6063; fax (770) 703–6097.

SUPPLEMENTARY INFORMATION:

Comments Invited

Interested persons are invited to participate in the making of the proposed rule by submitting such written data, views, or arguments as they may desire. Communications shall identify the Rules Docket number and be submitted in triplicate to the address specified above. All communications received on or before the closing date for comments, specified above, will be considered before taking action on the proposed rule. The proposals contained in this notice may be changed in light of the comments received.

Comments are specifically invited on the overall regulatory, economic, environmental, and energy aspects of the proposed rule. All comments submitted will be available, both before and after the closing date for comments, in the Rules Docket for examination by interested persons. A report summarizing each FAA-public contact concerned with the substance of this proposal will be filed in the Rules Docket.

Commenters wishing the FAA to acknowledge receipt of their comments submitted in response to this notice must submit a self-addressed, stamped postcard on which the following statement is made: ''Comments to Docket Number 98–NM–200–AD.'' The postcard will be date stamped and returned to the commenter.

Availability of NPRMs

Any person may obtain a copy of this NPRM by submitting a request to the FAA, Transport Airplane Directorate, ANM–114, Attention: Rules Docket No. 98–NM–200–AD, 1601 Lind Avenue, SW., Renton, Washington 98055–4056.

Discussion

Over the past several years, the FAA has received numerous reports of leakage from the lavatory service systems on in-service transport category airplanes that resulted in the formation of ''blue ice'' on the fuselage. In some instances, the ''blue ice'' subsequently dislodged from the fuselage and was ingested into an engine. In several of these incidents, the ingestion of ''blue ice'' into an engine resulted in the loss of an engine fan blade, severe engine damage, and the in-flight shutdown of the engine. In two cases, the loads created by the ''blue ice'' being ingested into the engine resulted in the engine being physically torn from the airplane. Damage to an engine, or the separation of an engine from the airplane, could result in reduced controllability of the airplane.

The FAA also has received reports of at least three incidents of damage to the airframes of various models of transport category airplanes that was caused by foreign objects that dislodged from the forward toilet drain valve and flush/fill line. One report was of a dent on the leading edge of the right horizontal stabilizer on a Boeing Model 737 series airplane that was caused by ''blue ice'' that had formed from leakage through a flush/fill line; in this case, the flush/fill cap was missing from the line at the forward service panel. Numerous operators have stated that leakage from the flush/fill line is a significant source of problems associated with ''blue ice.'' Such damage caused by ''blue ice'' could adversely affect the integrity of the fuselage skin or surface structures.

Additionally, there have been numerous reports of ''blue ice'' dislodging from airplanes and striking houses, cars, buildings, and other occupied areas on the ground. Although there have been no reports of any person being struck by ''blue ice,'' the FAA considers that the large number of reported cases of ''blue ice'' falling from lavatory drain systems is sufficient to support the conclusion that ''blue ice'' presents an unsafe condition to people on the ground. Demographic studies have shown that population density has increased around airports, and probably will continue to increase. These are populations that are at greatest risk of damage and injury due to ''blue ice'' dislodging from an airplane during descent. Without actions to ensure that leaks from the lavatory drain systems are detected and corrected in a timely manner, ''blue ice'' incidents could go unchecked and eventually someone may be struck, perhaps fatally, by falling ''blue ice.''

Current Rules

In response to these incidents, the FAA has issued several AD's applicable to various transport category airplanes, and is currently considering additional rulemaking to address the problems associated with ''blue ice'' on other transport category airplanes.

Discussion of the Proposed Rule

Since an unsafe condition has been identified that is likely to exist or develop on other products of this same type design, the FAA is proposing this AD, which would require the following actions:

Paragraph (a) of the proposed AD would require periodic replacement of the valve seals of each lavatory drain system with new valve seals. This paragraph also would require repetitive leak tests of the lavatory dump valve and drain valve (either service panel or in-line drain valve). The leak test of panel valves would be required to be performed with a minimum of 3 pounds per square inch differential pressure (PSID) applied across the valve. Paragraph (b) would require that, if any leak is discovered, operators would be required either to repair the leak and retest for leaks, or drain the lavatory system and placard it inoperative until repairs can be made.

In cases where the panel valve has both an inner seal and an outer cap seal, a visual inspection would be required for damage or wear of the outer cap seal and seal surface. Any damaged parts detected would be required to be repaired or replaced prior to further flight, or the lavatory drained and placarded inoperative until repairs can be made.

Paragraph (a) of the proposed AD also would require replacement of all ''donut'' type drain system valves with another type of FAA-approved valve.

Additionally, the flush/fill line anti-siphon valve would be required to be leak checked. Seals of the anti-siphon (check) valve, flush/fill line cap, or flush/fill line ball valve would be required to be replaced periodically.

Paragraph (c) of the proposed AD would require that all operators install a lever lock cap on the flush/fill lines for all service panels, a flush/fill ball valve, Kaiser Electroprecision part number (P/N) series 0062–0009, on the flush/fill lines for all lavatories; or a vacuum break, Monogram P/N series 3765–190 or Shaw Aero Devices P/N series 301–0009–01, in the flush/fill lines for all lavatories.

Paragraph (d) of the proposed AD would require that, before an operator places an airplane into service, a

schedule for accomplishment of the leak tests required by this AD shall be established. This provision is intended to ensure that transferred airplanes are inspected in accordance with the AD on the same basis as if there were continuity in ownership, and that scheduling of the leak tests for each airplane is not delayed or postponed due to a transfer of ownership. Airplanes that have previously been subject to the AD would have to be checked in accordance with either the previous operator's or the new operator's schedule, whichever would result in the earlier accomplishment date for that leak test. Other airplanes would have to be inspected before an operator could begin operating them, or in accordance with a schedule approved by the FAA Principal Maintenance Inspector (PMI), but within a period not to exceed 200 flight hours.

Economic Impact

There are approximately 235 Model L–1011–385 series airplanes of the affected design in the worldwide fleet. The FAA estimates that 117 airplanes of U.S. registry would be affected by this proposed AD.

The proposed leak test of the waste drain system and outer cap inspection would take approximately 6 work hours per airplane to accomplish, at an average labor rate of $60 per work hour. Based on these figures, the cost impact on U.S. operators of the leak test of the waste drain system and outer cap inspection is estimated to be $42,120, or $360 per airplane, per test/inspection.

Certain airplanes (i.e., those that have ''donut'' type drain valves installed) may be required to be leak tested as many as 15 times each year. Certain other airplanes having other valve configurations would be required to be leak tested as few as one time each year. Based on these figures, the annual (recurring) cost impact of the required repetitive leak tests on U.S. operators is estimated to be between $360 and $5,400 per airplane, per year.

With regard to replacement of ''donut'' type drain valves, the cost of a new valve is approximately $1,200. However, the number of leak tests for an airplane that is flown an average of 3,000 flight hours a year is thereby reduced from 15 tests to 3 tests. The cost reduction because of the number of tests required is approximately equal to the cost of the replacement valve. Therefore, no additional cost would be incurred.

The FAA estimates that it would take approximately 1 work hour per airplane lavatory drain to accomplish a visual inspection of the service panel drain valve cap/door seal and seal mating surfaces, at an average labor rate of $60 per work hour. As with leak tests, certain airplanes would be required to be visually inspected as many as 15 times or as few as 3 times each year. Based on these figures, the annual (recurring) cost impact of the proposed repetitive visual inspections on U.S. operators is estimated to be between $180 and $900 per airplane, per year.

The proposed installation of the flush/fill line cap would take approximately 1 work hour per cap to accomplish, at an average labor rate of $60 per work hour. The cost of required parts would be $275 per cap. There are an average of 2 caps per airplane. Based on these figures, the cost impact on U.S. operators of these proposed requirements of this AD is estimated to be $78,390, or $670 per airplane, per replacement cycle.

The seal replacements of the drain valves required by paragraph (a) of this AD would require approximately 2 work hours to accomplish, at an average labor cost of $60 per hour. The cost of required parts would be $200 per each seal change. Based on these figures, the cost impact on U.S. operators of these proposed requirements of this AD is estimated to be $37,440, or approximately $320 per airplane, per replacement cycle.

The number of required work hours, as indicated above, is presented as if the accomplishment of the actions proposed in this AD were to be conducted as ''stand alone'' actions. However, in actual practice, these actions could be accomplished coincidentally or in combination with normally scheduled airplane inspections and other maintenance program tasks. Therefore, the actual number of necessary ''additional'' work hours would be minimal in many instances. Additionally, any costs associated with special airplane scheduling should be minimal.

The cost impact figures discussed above are based on assumptions that no operator has yet accomplished any of the current or proposed requirements of this AD action, and that no operator would accomplish those actions in the future if this AD were not adopted.

The FAA recognizes that the obligation to maintain aircraft in an airworthy condition is vital, but sometimes expensive. Because AD's require specific actions to address specific unsafe conditions, they appear to impose costs that would not otherwise be borne by operators. However, because of the general obligation of operators to maintain aircraft in an airworthy condition, this appearance is deceptive. Attributing those costs solely to the issuance of this proposed AD is unrealistic because, in the interest of maintaining safe aircraft, prudent operators would accomplish the required actions even if they were not required to do so by the proposed AD.

A full cost-benefit analysis has not been accomplished for this proposed AD. As a matter of law, in order to be airworthy, an aircraft must conform to its type design and be in a condition for safe operation. The type design is approved only after the FAA makes a determination that it complies with all applicable airworthiness requirements. In adopting and maintaining those requirements, the FAA has already made the determination that they establish a level of safety that is cost-beneficial. When the FAA, as in this proposed AD, makes a finding of an unsafe condition, this means that the original cost-beneficial level of safety is no longer being achieved and that the required actions are necessary to restore that level of safety. Because this level of safety has already been determined to be cost-beneficial, a full cost-benefit analysis for this proposed AD would be redundant and unnecessary.

Regulatory Impact

The regulations proposed herein would not have substantial direct effects on the States, on the relationship between the national government and the States, or on the distribution of power and responsibilities among the various levels of government. Therefore, in accordance with Executive Order 12612, it is determined that this proposal would not have sufficient federalism implications to warrant the preparation of a Federalism Assessment.

For the reasons discussed above, I certify that this proposed regulation (1) is not a ''significant regulatory action'' under Executive Order 12866; (2) is not a ''significant rule'' under the DOT Regulatory Policies and Procedures (44 FR 11034, February 26, 1979); and (3) if promulgated, will not have a significant economic impact, positive or negative, on a substantial number of small entities under the criteria of the Regulatory Flexibility Act. A copy of the draft regulatory evaluation prepared for this action is contained in the Rules Docket. A copy of it may be obtained by contacting the Rules Docket at the location provided under the caption **ADDRESSES**.

List of Subjects in 14 CFR Part 39

Air transportation, Aircraft, Aviation safety, Safety.

The Proposed Amendment

Accordingly, pursuant to the authority delegated to me by the Administrator, the Federal Aviation Administration proposes to amend part 39 of the Federal Aviation Regulations (14 CFR part 39) as follows:

PART 39—AIRWORTHINESS DIRECTIVES

1. The authority citation for part 39 continues to read as follows:

Authority: 49 U.S.C. 106(g), 40113, 44701.

§ 39.13 [Amended]

2. Section 39.13 is amended by adding the following new airworthiness directive:

Lockheed: Docket 98–NM–200–AD.

Applicability: All Model L–1011–385–1, L–1011–385–3, L–1011–385–1–14, and L–1011–385–1–15 series airplanes, certificated in any category.

Note 1: This AD applies to each airplane identified in the preceding applicability provision, regardless of whether it has been modified, altered, or repaired in the area subject to the requirements of this AD. For airplanes that have been modified, altered, or repaired so that the performance of the requirements of this AD is affected, the owner/operator must request approval for an alternative method of compliance in accordance with paragraph (e) of this AD. The request should include an assessment of the effect of the modification, alteration, or repair on the unsafe condition addressed by this AD; and, if the unsafe condition has not been eliminated, the request should include specific proposed actions to address it.

Compliance: Required as indicated, unless accomplished previously.

To prevent engine damage, airframe damage, and/or hazard to persons or property on the ground as a result of ''blue ice'' that has formed from leakage of the lavatory drain system or flush/fill systems and dislodged from the airplane, accomplish the following:

(a) Accomplish the applicable requirements of paragraphs (a)(1) through (a)(9) of this AD at the time specified in each paragraph. For the waste drain system of any lavatory that incorporates more than one type of valve, only one of the leak tests waste drain system procedures (the one that applies to the equipment with the longest leak test interval) must be conducted at each service panel location. The leak tests of the waste drain system valve specified in this AD shall be performed in accordance with the following requirements: Fluid shall completely cover the upstream end of the valve being tested; the direction of the 3 pounds per square inch differential pressure (PSID) shall be applied across the valve in the same direction as occurs in flight; the other waste drain system valves shall be open; and the minimum time to maintain the differential pressure shall be 5 minutes. Any revision of the seal change intervals or leak test intervals must be approved by the Manager, Atlanta Certification Office (ACO), FAA, Small Airplane Directorate.

Note 2: Inclusion of a valve in this AD does not mean that the valve has been certified for installation in Lockheed Model L–1011 series airplanes. Certification of the valve for installation in the airplane must be accomplished by means acceptable to the FAA, if the valve has not been previously certified.

(1) Replace the valve seals with new valve seals in accordance with the applicable schedule specified in paragraphs (a)(1)(i), (a)(1)(ii), (a)(1)(iii), and (a)(1)(iv) of this AD.

(i) For each lavatory drain system that has a Kaiser Electroprecision in-line drain valve installed, part number (P/N) series 2651–278: Replace the seals within 5,000 flight hours after the effective date of this AD, or within 48 months after the last documented seal change, whichever occurs later. Thereafter, replace the seals at intervals not to exceed 48 months.

(ii) For each lavatory drain system that has a Pneudraulics P/N series 9527 valve: Replace the seals within 5,000 flight hours after the effective date of this AD, or within 18 months of the last documented seal change, whichever occurs later. Thereafter, replace the seals at intervals not to exceed 18 months or 6,000 flight hours, whichever occurs later.

(iii) For each lavatory drain system that has an Eaton service drain valve, P/N series 72435: Replace the seals within 5,000 flight hours after the effective date of this AD, or within 18 months of the last documented seal change, whichever occurs later. Thereafter, replace the seals at intervals not to exceed 18 months.

(iv) For each lavatory drain system that has any other type of drain valve: Replace the seals within 5,000 flight hours after the effective date of this AD, or within 18 months after the last documented seal change, whichever occurs later. Thereafter, replace the seals at intervals not to exceed 18 months.

(2) For each lavatory drain system that has an in-line drain valve installed, Kaiser Electroprecision P/N series 2651–278: Within 4,500 flight hours after the effective date of this AD, and thereafter at intervals not to exceed 4,500 flight hours, accomplish the procedures specified in paragraphs (a)(2)(i) and (a)(2)(ii) of this AD.

(i) Conduct a leak test of the toilet tank dump valve (in-tank valve that is spring loaded closed and operable by a T-handle at the service panel) and the in-line drain valve. The leak test of the toilet tank dump valve must be performed by filling the toilet tank with a minimum of 10 gallons of water/rinsing fluid and testing for leakage after a period of 5 minutes. Take precautions to avoid overfilling the tank and spilling fluid into the airplane. The leak test of the in-line drain valve must be performed with a minimum of 3 PSID applied across the valve.

(ii) If a service panel valve or cap is installed, perform a visual inspection to detect wear or damage that may allow leakage of the service panel drain valve outer cap/door seal and the inner seal (if the valve has an inner door with a second positive seal), and the seal mating surfaces.

(3) For each lavatory drain system that has an Eaton service drain valve, P/N series 72435: Within 1,000 flight hours after the effective date of this AD, and thereafter at intervals not to exceed 1,000 flight hours, accomplish the procedures specified in paragraphs (a)(3)(i) and (a)(3)(ii) of this AD.

(i) Conduct a leak test of the toilet tank dump valve (in-tank valve operable by a lever at the service panel) and the in-line drain valve. The leak test of the toilet tank dump valve must be performed by filling the toilet tank with a minimum of 10 gallons of water/rinsing fluid and testing for leakage after a period of 5 minutes. Take precautions to avoid overfilling the tank and spilling fluid into the airplane. The leak test of the in-line drain valve must be performed with a minimum of 3 PSID applied across the valve.

(ii) If a service panel valve or cap is installed, perform a visual inspection of the service panel drain valve outer cap/door seal and the inner seal (if the valve has an inner door with a second positive seal), and the seal mating surfaces for wear or damage that may allow leakage.

(4) For each lavatory drain system that has a service panel drain valve installed, Pneudraulics P/N series 9527: Within 2,000 flight hours after the effective date of this AD, accomplish the requirements of paragraphs (a)(4)(i) and (a)(4)(ii) of this AD. Thereafter, repeat the leak tests at intervals not to exceed 2,000 flight hours.

(i) Conduct leak tests of the toilet tank dump valve and service panel drain valve. The leak test of the toilet tank dump valve must be performed by filling the toilet tank with a minimum of 10 gallons of water/rinsing fluid and testing for leakage after a period of 5 minutes. Take precautions to avoid overfilling the tank and spilling fluid into the airplane. The leak test of the service panel drain valve must be performed with a minimum of 3 PSID applied across the valve inner door/closure device.

(ii) Perform a visual inspection of the outer cap/door and seal mating surface for wear or damage that may cause leakage.

(5) For each lavatory drain system that has a service panel drain valve installed, Kaiser Electroprecision P/N series 0218–0032 or 2651–357, or Shaw Aero P/N's and serial numbers as listed in Table 1 of this AD: Within 1,000 flight hours after the effective date of this AD, and thereafter at intervals not to exceed 1,000 flight hours, accomplish the requirements of paragraphs (a)(5)(i) and (a)(5)(ii) of this AD.

TABLE 1.—SHAW AERO VALVES APPROVED FOR 1,000 FLIGHT HOURS LEAK TEST INTERVAL

Shaw waste drain valve part number	Serial numbers of P/N valve approved for 1,000-hour leak test interval
331 Series, 332 Series	All.
10101000B–A	None.
10101000B–A–1	0207–0212, 0219, 0226 and higher.
10101000BA2	0130 and higher.
10101000C–A–1	0277 and higher.
10101000C–J	None.
10101000C–J–2	None.
10101000CN or C–N	3649 and higher.
Certain 10101000B valves	Any of these ''B'' series valves that incorporate the improvements of Shaw Service Bulletin 10101000B–38–1, dated October 7, 1994, and are marked ''SBB38–1–58''.
Certain 10101000C valves	Any of these ''C'' series valves that incorporate the improvements of Shaw Service Bulletin 10101000C–38–2 dated October 7, 1994, and are marked ''SBC38–2–58''.

(i) Conduct a leak test of the toilet tank dump valve and service panel drain valve. The leak test of the toilet tank dump valve must be performed by filling the toilet tank with a minimum of 10 gallons of water/rinsing fluid and testing for leakage after a period of 5 minutes. Take precautions to avoid overfilling the tank and spilling fluid into the airplane. The leak test of the service panel drain valve must be performed with a minimum of 3 PSID applied across the valve inner door/closure device.

(ii) Perform a visual inspection of the outer cap/door and seal mating surface for wear or damage that may cause leakage.

(6) For each lavatory drain system that has a service panel drain valve installed, Kaiser Electroprecision P/N series 0218–0026 or Shaw Aero Devices P/N series 10101000B or 10101000C [except as specified in paragraph (a)(5) of this AD]: Within 600 flight hours after the effective date of this AD, and thereafter at intervals not to exceed 600 flight hours, accomplish the procedures specified in paragraphs (a)(6)(i) and (a)(6)(ii) of this AD.

(i) Conduct a leak test of the toilet tank dump valve and the service panel drain valve. The leak test of the toilet tank dump valve must be performed by filling the toilet tank with a minimum of 10 gallons of water/rinsing fluid and testing for leakage after a period of 5 minutes. Take precautions to avoid overfilling the tank and spilling fluid into the airplane. The leak test of the service panel drain valve must be performed with a minimum of 3 PSID applied across the valve inner door/closure device.

(ii) Perform a visual inspection of the outer cap/door and seal mating surface for wear or damage that may cause leakage.

(7) For each lavatory drain system with a lavatory drain system valve that incorporates ''donut'' plug, Kaiser Electroprecision P/N 4259–20 or 4259–31; Kaiser Roylyn/Kaiser Electroprecision cap/flange P/N 2651–194C, 2651–197C, 2651–216, 2651–219, 2651–235, 2651–256, 2651–258, 2651–259, 2651–260, 2651–275, 2651–282, or 2651–286; Shaw Aero Devices assembly P/N 0008–100; or other FAA-approved equivalent parts; accomplish the requirements of paragraphs (a)(7)(i), (a)(7)(ii), and (a)(7)(iii) of this AD at the times specified in those paragraphs. For the purposes of this paragraph [(a)(7)], ''FAA-approved equivalent part'' means either a ''donut'' plug which mates with the cap/flange P/N's listed above, or a cap/flange which mates with the ''donut'' plug P/N's listed above, such that the cap/flange and ''donut'' plug are used together as an assembled valve.

(i) Within 200 flight hours after the effective date of this AD, and thereafter at intervals not to exceed 200 flight hours, conduct leak tests of the toilet tank dump valve and the service panel drain valve. The leak test of the toilet tank dump valve must be performed by filling the toilet tank with a minimum of 10 gallons of water/rinsing fluid and testing for leakage after a period of 5 minutes. Take precautions to avoid overfilling the tank and spilling fluid into the airplane. The leak test of the service panel drain valve must be performed with a minimum 3 PSID applied across the valve.

(ii) Perform a visual inspection of the outer door/cap and seal mating surface for wear or damage that may cause leakage. This inspection shall be accomplished in conjunction with the leak tests of paragraph (a)(7)(i) of this AD.

(iii) Within 5,000 flight hours after the effective date of this AD, replace all the ''donut'' valves identified in paragraph (a)(7) of this AD with another type of FAA-approved valve. Following installation of the replacement valve, perform the appropriate leak tests and seal replacements at the intervals specified for that replacement valve, as applicable.

(8) For each lavatory drain system not addressed in paragraph (a)(2), (a)(3), (a)(4), (a)(5), (a)(6), (a)(7), or (a)(8), of this AD: Within 200 flight hours after the effective date of this AD, and thereafter at intervals not to exceed 200 flight hours, accomplish the procedures specified in paragraphs (a)(8)(i) and (a)(8)(ii) of this AD.

(i) Conduct a leak test of the toilet tank dump valve and the service panel drain valve. The leak test of the toilet tank dump valve must be performed by filling the toilet tank with a minimum of 10 gallons of water/rinsing fluid and testing for leakage after a period of 5 minutes. Take precautions to avoid overfilling the tank and spilling fluid into the airplane. The leak test of the service panel drain valve must be performed with a minimum of 3 PSID applied across the valve inner door/closure device.

(ii) Perform a visual inspection of the outer cap/door and seal mating surface for wear or damage that may cause leakage.

(9) For flush/fill lines: Within 5,000 flight hours after the effective date of this AD, perform the requirements of paragraph (a)(9)(i) or (a)(9)(ii), as applicable; and paragraph (a)(9)(iii) of this AD. Thereafter, repeat these requirements at intervals not to exceed 5,000 flight hours, or 48 months after the last documented seal change, whichever occurs later.

(i) If a lever lock cap is installed on the flush/fill line of the subject lavatory, replace the seals on the toilet tank anti-siphon (check) valve and the flush/fill line cap with new or serviceable seals and caps. Perform a leak test of the toilet tank anti-siphon (check) valve with a minimum of 3 PSID across the valve, in accordance with the applicable portions of paragraph (a)(10)(ii)(A) of this AD.

(ii) If a vacuum breaker check valve, Monogram P/N series 3765–190, or Shaw Aero Devices P/N series 301–0009–01, is installed on the subject lavatory, replace the seals/o-rings in the valve with a new or serviceable valve. Perform a leak test of the vacuum breaker check valve and verify proper operation of the vent line vacuum breaker, in accordance with paragraphs (a)(9)(ii)(A) and (a)(9)(ii)(B) of this AD.

(A) Leak test the toilet tank anti-siphon (check) valve or the vacuum breaker check valve by filling the toilet tank with water/rinsing fluid to a level such that the bowl is approximately half full (at least 2 inches above the flapper in the bowl). Apply 3 PSID across the valve in the same direction as occurs in flight. The vent line vacuum breaker on vacuum breaker check valves must be pinched closed or plugged for this leak test. If there is a cap/valve at the flush/fill line port, the cap/valve must be removed/open during the test. Check for leakage at the flush/fill line port for a period of 5 minutes.

(B) Verify proper operation of the vent line vacuum breaker by filling the tank and checking at the fill line port for back drainage after disconnecting the fluid source from the flush/fill line port. If back drainage does not occur, replace the vent line vacuum breaker with a new or serviceable breaker or repair the vacuum breaker check valve, in accordance with the component maintenance manual to obtain proper back drainage. As an alternative to the test technique specified above, verify proper operation of the vent line vacuum breaker in accordance with the procedures of the applicable component maintenance manual.

(iii) If a flush/fill ball valve, Kaiser Electroprecision P/N series 0062–0009, is installed on the flush/fill line of the subject lavatory, replace the seals in the flush/fill ball valve and the toilet tank anti-siphon valve with new or serviceable seals and valves. Perform a leak test of the toilet tank anti-siphon valve with a minimum of 3 PSID across the valve, in accordance with paragraph (a)(9)(ii)(A) of this AD.

(b) If leakage is discovered during any leak test or inspection required by paragraph (a) of this AD, or if evidence of leakage is found at any other time, accomplish the requirements of paragraph (a)(10)(i), (a)(10)(ii), (a)(10)(iii), or (a)(10)(iv) of this AD, as applicable.

(1) If leakage is discovered, prior to further flight, repair the leak. Prior to further flight after repair, perform the appropriate leak test as specified in paragraph (a) of this AD, as applicable. Additionally, prior to returning the airplane to service, clean the surfaces adjacent to where the leakage occurred to clear them of any horizontal fluid residue streaks; such cleaning must be to the extent that any future appearance of a horizontal fluid residue streak will be taken to mean that the system is leaking again.

Note 3: For purposes of this AD, ''leakage'' is defined as any visible leakage, if observed during a leak test. At any other time (than during a leak test), ''leakage'' is defined as the presence of ice in the service panel, or horizontal fluid residue streaks/ice trails originating at the service panel. The fluid residue is usually, but not necessarily, blue in color.

(2) If any worn or damaged seal is found, or if any damaged seal mating surface is found, prior to further flight, repair or replace it with a new or serviceable seal, in accordance with the valve manufacturer's maintenance manual.

(3) In lieu of performing the requirements of paragraph (b)(1) or (b)(2) of this AD: Prior to further flight, drain the affected lavatory system and placard the affected lavatory inoperative until repairs can be accomplished.

(4) In lieu of performing the requirements of paragraph (b)(1), (b)(2) or (b)(3) of this AD: Prior to further flight, install an FAA-approved ''donut'' plug; perform the leak test required by paragraph (a)(3) or (9) of this AD, as applicable; and repeat that leak test each time the ''donut'' valve is removed for tank servicing. Within 10 days after the installation of the FAA-approved ''donut'' plug, accomplish either paragraph (b)(4)(i) or (b)(4)(ii) of this AD:

(i) Accomplish the requirements of paragraphs (b)(1) and (b)(2) of this AD. Or

(ii) Accomplish the requirements of paragraph (b)(3) of this AD.

(c) For all airplanes: Unless accomplished previously, within 5,000 flight hours after the effective date of this AD, perform the actions specified in either paragraph (c)(1), (c)(2), or (c)(3) of this AD.

(1) Install an FAA-approved lever lock cap on the flush/fill lines for all lavatories. Or

(2) Install a vacuum break, Monogram P/N series 3765–190 or Shaw Aero Devices P/N series 301–0009–01, in the flush/fill lines for all lavatories. Or

(3) Install a flush/fill ball valve, Kaiser Electroprecision P/N series 0062–0009 on the flush/fill lines for all lavatories.

(d) For any affected airplane acquired after the effective date of this AD: Before any operator places into service any airplane subject to the requirements of this AD, a schedule for the accomplishment of the leak tests required by this AD shall be established in accordance with either paragraph (d)(1) or (d)(2) of this AD, as applicable. After each leak test has been performed once, each subsequent leak test must be performed in accordance with the new operator's schedule, in accordance with paragraph (a) of this AD.

(1) For airplanes that have been maintained previously in accordance with this AD, the first leak test to be performed by the new operator must be accomplished in accordance with the previous operator's schedule or with the new operator's schedule, whichever results in the earlier accomplishment date for that leak test.

(2) For airplanes that have not been previously maintained in accordance with this AD, the first leak test to be performed by the new operator must be accomplished prior to further flight, or in accordance with a schedule approved by the FAA Principal Maintenance Inspector (PMI), but within a period not to exceed 200 flight hours.

(e) An alternative method of compliance or adjustment of the compliance time that provides an acceptable level of safety may be used if approved by the Manager, Atlanta Aircraft Certification Office (ACO), FAA, Small Airplane Directorate. Operators shall submit their requests through an appropriate FAA PMI, who may add comments and then send it to the Manager, Atlanta ACO.

Note 4: Information concerning the existence of approved alternative methods of compliance with this AD, if any, may be obtained from the Atlanta ACO.

(f) Special flight permits may be issued in accordance with sections 21.197 and 21.199 of the Federal Aviation Regulations (14 CFR 21.197 and 21.199) to operate the airplane to a location where the requirements of this AD can be accomplished.

Issued in Renton, Washington, on August 28, 1998.

Vi L. Lipski,

Acting Manager, Transport Airplane Directorate, Aircraft Certification Service.

[FR Doc. 98–23741 Filed 9–2–98; 8:45 am]

BILLING CODE 4910–13–U

DEPARTMENT OF TRANSPORTATION

Federal Aviation Administration

14 CFR Part 39

[Docket No. 98–NM–233–AD]

RIN 2120–AA64

Airworthiness Directives; Empresa Brasileira de Aeronautica S.A. (EMBRAER) Model EMB–120 Series Airplanes

AGENCY: Federal Aviation Administration, DOT.

ACTION: Notice of proposed rulemaking (NPRM).

SUMMARY: This document proposes the adoption of a new airworthiness directive (AD) that is applicable to certain EMBRAER Model EMB–120 series airplanes. This proposal would require replacement of the fairlead support assemblies of the aileron control cable located in the nacelle outboard fittings with new, improved assemblies; and replacement of certain attachment screws with new screws. This proposal is prompted by reports of aileron cable wear due to chafing found between the aileron control cables and nylon grommets. The actions specified by the proposed AD are intended to prevent such chafing, which could result in failure of the aileron cables, and consequent reduced controllability of the airplane.

DATES: Comments must be received by October 5, 1998.

ADDRESSES: Submit comments in triplicate to the Federal Aviation Administration (FAA), Transport Airplane Directorate, ANM–114, Attention: Rules Docket No. 98–NM–233–AD, 1601 Lind Avenue, SW., Renton, Washington 98055–4056. Comments may be inspected at this location between 9:00 a.m. and 3:00 p.m., Monday through Friday, except Federal holidays.

The service information referenced in the proposed rule may be obtained from Empresa Brasileira de Aeronautica S.A. (EMBRAER), P.O. Box 343—CEP 12.225, Sao Jose dos Campos—SP, Brazil. This information may be examined at the FAA, Transport Airplane Directorate, 1601 Lind Avenue, SW., Renton, Washington; or at the FAA, Small Airplane Directorate, Atlanta Aircraft Certification Office, One Crown Center, 1895 Phoenix Boulevard, suite 450, Atlanta, Georgia.

FOR FURTHER INFORMATION CONTACT: Rob Capezutto, Aerospace Engineer, Systems and Flight Test Branch, ACE–116A, FAA, Small Airplane Directorate, Atlanta Aircraft Certification Office, One Crown Center, 1895 Phoenix Boulevard, suite 450, Atlanta, Georgia 30349; telephone (770) 703–6071; fax (770) 703–6097.

SUPPLEMENTARY INFORMATION:

Comments Invited

Interested persons are invited to participate in the making of the proposed rule by submitting such written data, views, or arguments as they may desire. Communications shall identify the Rules Docket number and be submitted in triplicate to the address

specified above. All communications received on or before the closing date for comments, specified above, will be considered before taking action on the proposed rule. The proposals contained in this notice may be changed in light of the comments received.

Comments are specifically invited on the overall regulatory, economic, environmental, and energy aspects of the proposed rule. All comments submitted will be available, both before and after the closing date for comments, in the Rules Docket for examination by interested persons. A report summarizing each FAA-public contact concerned with the substance of this proposal will be filed in the Rules Docket.

Commenters wishing the FAA to acknowledge receipt of their comments submitted in response to this notice must submit a self-addressed, stamped postcard on which the following statement is made: ''Comments to Docket Number 98–NM–233–AD.'' The postcard will be date stamped and returned to the commenter.

Availability of NPRMs

Any person may obtain a copy of this NPRM by submitting a request to the FAA, Transport Airplane Directorate, ANM–114, Attention: Rules Docket No. 98–NM–233–AD, 1601 Lind Avenue, SW., Renton, Washington 98055–4056.

Discussion

The FAA has received numerous reports indicating that, during inspections conducted at the manufacturer's facility, aileron cable wear was found on Model EMB–120 series airplanes. Investigation revealed that the wear was caused by chafing between aileron control cables and nylon grommets in the passage points of the nacelle outboard fitting, due to the position of the cable while the airplane is in flight. This condition, if not corrected, could result in failure of the aileron cables and consequent reduced controllability of the airplane.

Explanation of Relevant Service Information

EMBRAER has issued Service Bulletin 120–27–0068, Change 02, dated March 20, 1998, which describes procedures for either replacement of the fairlead support assemblies of the aileron control cable with new, improved assemblies, or replacement of the screws attaching the Teflon fairlead of the aileron control fairlead support assemblies with new screws, if applicable. Accomplishment of the actions specified in the service bulletin is intended to adequately address the identified unsafe condition. The Departmento de Aviacao Civil (DAC), which is the airworthiness authority for Brazil, has approved this service bulletin in order to assure the continued airworthiness of these airplanes in Brazil.

U.S. Type Certification of Airplane

This airplane model is manufactured in Brazil and is type certificated for operation in the United States under the provisions of section 21.29 of the Federal Aviation Regulations (14 CFR 21.29) and the applicable bilateral airworthiness agreement.

Explanation of Requirements of Proposed Rule

Since an unsafe condition has been identified that is likely to exist or develop on other airplanes of the same type design registered in the United States, the proposed AD would require accomplishment of the actions specified in the service bulletin described previously, except as discussed below.

Differences Between Proposed Rule and Service Bulletin

Operators should note that, although EMBRAER Service Bulletin 120–27–0068, Change 02, dated March 20, 1998 (Parts I, II, and IV) allows a compliance time which specifies that corrective actions may be accomplished at the operator's discretion, and Part III of the service bulletin allows a compliance time of 800 hours time-in-service, the FAA has determined that these compliance times would not address the identified unsafe condition in a timely manner. The FAA has considered the safety implications associated with replacement of the fairlead support assemblies of the aileron control cable or attachment screws, and finds that a compliance time of 400 hours time-in-service for performing the replacement is warranted for all affected airplanes, in that it represents an appropriate interval of time allowable for affected airplanes to continue to operate without compromising safety.

Cost Impact

The FAA estimates that 227 airplanes of U.S. registry would be affected by this proposed AD.

For airplanes identified in Part I of EMBRAER Service Bulletin 120–27–0068, Change 02, it would take approximately 4 work hours per airplane to accomplish the proposed replacement of the fairlead support assemblies of the aileron control cable, at an average labor rate of $60 per work hour. Required parts would cost approximately $1,464 per airplane. Based on these figures, the cost impact of this replacement proposed by this AD on U.S. operators is estimated to be $386,808, or $1,704 per airplane.

For airplanes identified in Part II of EMBRAER Service Bulletin 120–27–0068, Change 02, it would take approximately 1 work hour per airplane to accomplish the proposed replacement of the fairlead support assemblies of the aileron control cable, at an average labor rate of $60 per work hour. Required parts would cost approximately $1,292 per airplane. Based on these figures, the cost impact of this replacement proposed by this AD on U.S. operators is estimated to be $306,904, or $1,352 per airplane.

For airplanes identified in Part III of EMBRAER Service Bulletin 120–27–0068, Change 02, it would take approximately 1 work hour per airplane to accomplish the proposed replacement of the fairlead support assemblies of the aileron control cable, at an average labor rate of $60 per work hour. Required parts would cost approximately $501 per airplane. Based on these figures, the cost impact of this replacement proposed by this AD on U.S. operators is estimated to be $127,347, or $561 per airplane.

For airplanes identified in Part IV of EMBRAER Service Bulletin 120–27–0068, Change 02, it would take approximately 1 work hour per airplane to accomplish the proposed replacement of the attachment screws, at an average labor rate of $60 per work hour. Required parts cost would be minimal. Based on these figures, the cost impact of this replacement proposed by this AD on U.S. operators is estimated to be $13,620, or $60 per airplane.

The cost impact figures discussed above are based on assumptions that no operator has yet accomplished any of the proposed requirements of this AD action, and that no operator would accomplish those actions in the future if this AD were not adopted.

Regulatory Impact

The regulations proposed herein would not have substantial direct effects on the States, on the relationship between the national government and the States, or on the distribution of power and responsibilities among the various levels of government. Therefore, in accordance with Executive Order 12612, it is determined that this proposal would not have sufficient federalism implications to warrant the preparation of a Federalism Assessment.

For the reasons discussed above, I certify that this proposed regulation (1) is not a ''significant regulatory action'' under Executive Order 12866; (2) is not

a ''significant rule'' under the DOT Regulatory Policies and Procedures (44 FR 11034, February 26, 1979); and (3) if promulgated, will not have a significant economic impact, positive or negative, on a substantial number of small entities under the criteria of the Regulatory Flexibility Act. A copy of the draft regulatory evaluation prepared for this action is contained in the Rules Docket. A copy of it may be obtained by contacting the Rules Docket at the location provided under the caption **ADDRESSES**.

List of Subjects in 14 CFR Part 39

Air transportation, Aircraft, Aviation safety, Safety.

The Proposed Amendment

Accordingly, pursuant to the authority delegated to me by the Administrator, the Federal Aviation Administration proposes to amend part 39 of the Federal Aviation Regulations (14 CFR part 39) as follows:

PART 39—AIRWORTHINESS DIRECTIVES

1. The authority citation for part 39 continues to read as follows:

Authority: 49 U.S.C. 106(g), 40113, 44701.

§ 39.13 [Amended]

2. Section 39.13 is amended by adding the following new airworthiness directive:

Empresa Brasileira De Aeronautica S.A. (EMBRAER): Docket 98–NM–233–AD.

Applicability: Model EMB–120 series airplanes, as listed in EMBRAER Service Bulletin 120–27–0068, Change 02, dated March 20, 1998; certificated in any category.

Note 1: This AD applies to each airplane identified in the preceding applicability provision, regardless of whether it has been otherwise modified, altered, or repaired in the area subject to the requirements of this AD. For airplanes that have been modified, altered, or repaired so that the performance of the requirements of this AD is affected, the owner/operator must request approval for an alternative method of compliance in accordance with paragraph (b) of this AD. The request should include an assessment of the effect of the modification, alteration, or repair on the unsafe condition addressed by this AD; and, if the unsafe condition has not been eliminated, the request should include specific proposed actions to address it.

Compliance: Required as indicated, unless accomplished previously.

To prevent chafing between the aileron control cables and nylon grommets, which could result in failure of the aileron cables, and consequent reduced controllability of the airplane, accomplish the following:

(a) Within 400 hours time-in-service after the effective date of this AD, accomplish the requirements of paragraph (a)(1), (a)(2), (a)(3), or (a)(4) of this AD, as applicable, in accordance with EMBRAER Service Bulletin 120–27–0068, Change 02, dated March 20, 1998.

(1) For airplanes having serial numbers 120003, 120004, and 120006 through 120217 inclusive, on which the modification specified in EMBRAER Service Bulletin 120–27–0068, dated February 28, 1991, has not been accomplished: Replace the fairlead support assemblies of the aileron control cable (provided with fairleads in both teflon and nylon) located in the nacelle outboard fittings with new, improved assemblies (Part I), in accordance with the service bulletin.

(2) For airplanes having serial numbers 120003, 120004, and 120006 through 120217 inclusive, on which the modification specified in EMBRAER Service Bulletin 120–27–0068, dated February 28, 1991, has been accomplished; and airplanes having serial numbers 120218 through 120331 inclusive: Replace the fairlead support assemblies of the aileron control cable (provided with fairleads in Teflon) located in the nacelle outboard fittings with new, improved assemblies (Part II), in accordance with the service bulletin.

(3) For airplanes having serial numbers 120003, 120004, and 120006 through 120331 inclusive, on which the modification specified in EMBRAER Service Bulletin 120–27–0068, dated February 28, 1991, or Change 01, dated August 1, 1997, has been accomplished; and airplanes having serial numbers 120332 and 120333: Replace the attachment screws and the fairlead support assemblies of the aileron control cable with new, improved assemblies (Part III), in accordance with the service bulletin.

(4) For airplanes having serial numbers 120334, 120335, and 120336: Replace the attachment screws of the fairlead support assemblies of the aileron control cable (Part IV), in accordance with the service bulletin.

(b) An alternative method of compliance or adjustment of the compliance time that provides an acceptable level of safety may be used if approved by the Manager, Atlanta Aircraft Certification Office (ACO), FAA, Small Airplane Directorate. Operators shall submit their requests through an appropriate FAA Principal Maintenance Inspector, who may add comments and then send it to the Manager, Atlanta ACO.

Note 2: Information concerning the existence of approved alternative methods of compliance with this AD, if any, may be obtained from the Atlanta ACO.

(c) Special flight permits may be issued in accordance with sections 21.197 and 21.199 of the Federal Aviation Regulations (14 CFR 21.197 and 21.199) to operate the airplane to a location where the requirements of this AD can be accomplished.

Issued in Renton, Washington, on August 28, 1998.

Vi L. Lipski,

Acting Manager, Transport Airplane Directorate, Aircraft Certification Service.

[FR Doc. 98–23740 Filed 9–2–98; 8:45 am]

BILLING CODE 4910–13–P

DEPARTMENT OF TRANSPORTATION

Federal Aviation Administration

14 CFR Part 39

[Docket No. 98–NM–71–AD]

RIN 2120–AA64

Airworthiness Directives; McDonnell Douglas Model MD–11 Series Airplanes

AGENCY: Federal Aviation Administration, DOT.

ACTION: Notice of proposed rulemaking (NPRM).

SUMMARY: This document proposes the adoption of a new airworthiness directive (AD) that is applicable to certain MD–11 series airplanes. This proposal would require a one-time visual inspection to detect discrepancies of the seat tracks and adjacent structure underneath lavatories, and repair, if necessary. This proposal also would require installation of a non-metallic barrier on the bottom of each lavatory foot fitting, and replacement of existing seat track fittings with new seat track fittings. This proposal is prompted by reports of galvanic corrosion found on the seat tracks at attachment points under certain lavatories. The actions specified by the proposed AD are intended to prevent corrosion of seat tracks and adjacent structure. Corrosion of the seat tracks and adjacent structure could result in shifting of lavatories, which could lead to injury of passengers and crew, as well as damage to aircraft structure and systems.

DATES: Comments must be received by October 19, 1998.

ADDRESSES: Submit comments in triplicate to the Federal Aviation Administration (FAA), Transport Airplane Directorate, ANM–114, Attention: Rules Docket No. 98–NM–71–AD, 1601 Lind Avenue, SW., Renton, Washington 98055–4056. Comments may be inspected at this location between 9:00 a.m. and 3:00 p.m., Monday through Friday, except Federal holidays.

The service information referenced in the proposed rule may be obtained from The Boeing Company, Douglas Products Division, 3855 Lakewood Boulevard, Long Beach, California 90846, Attention: Technical Publications Business Administration, Dept. C1–L51 (2–60). This information may be examined at the FAA, Transport Airplane Directorate, 1601 Lind Avenue, SW., Renton, Washington or at the FAA, Transport Airplane Directorate, Los Angeles Aircraft

Certification Office, 3960 Paramount Boulevard, Lakewood, California.

FOR FURTHER INFORMATION CONTACT: David Hsu, Aerospace Engineer,Airframe Branch, ANM–120L, FAA, Transport Airplane Directorate, Los Angeles Aircraft Certification Office, 3960 Paramount Boulevard, Lakewood, California 90712–4137; telephone (562) 627–5323; fax (562) 627–5210.

SUPPLEMENTARY INFORMATION:

Comments Invited

Interested persons are invited to participate in the making of the proposed rule by submitting such written data, views, or arguments as they may desire. Communications shall identify the Rules Docket number and be submitted in triplicate to the address specified above. All communications received on or before the closing date for comments, specified above, will be considered before taking action on the proposed rule. The proposals contained in this notice may be changed in light of the comments received.

Comments are specifically invited on the overall regulatory, economic, environmental, and energy aspects of the proposed rule. All comments submitted will be available, both before and after the closing date for comments, in the Rules Docket for examination by interested persons. A report summarizing each FAA-public contact concerned with the substance of this proposal will be filed in the Rules Docket.

Commenters wishing the FAA to acknowledge receipt of their comments submitted in response to this notice must submit a self-addressed, stamped postcard on which the following statement is made: ''Comments to Docket Number 98–NM–71–AD.'' The postcard will be date stamped and returned to the commenter.

Availability of NPRMs

Any person may obtain a copy of this NPRM by submitting a request to the FAA, Transport Airplane Directorate, ANM–114, Attention: Rules Docket No. 98–NM–71–AD, 1601 Lind Avenue, SW., Renton, Washington 98055–4056.

Discussion

The FAA has received reports of occurrences on six McDonnell Douglas MD–11 series airplanes of galvanic corrosion of the seat tracks under certain lavatories. Investigation revealed that the corrosion developed at the attachment points between the seat tracks and lavatories. Further investigation has revealed that the design of the attachment system allows dissimilar metals to come in contact with each other, causing galvanic corrosion. In some cases, the corrosion caused the seat track attachments for the lavatory to become ineffective. This condition, if not corrected, could result in shifting of lavatories, which could lead to injury to passengers and crew, as well as damage to airplane structure and systems.

Explanation of Relevant Service Information

The FAA has reviewed and approved McDonnell Douglas Service Bulletin MD11–53–043, Revision 02, dated May 28, 1996. This service bulletin describes procedures for installation of a non-metallic barrier on the bottom of each lavatory foot fitting, and replacement of existing seat track fittings with new seat track fittings. Accomplishment of the actions specified in the McDonnell Douglas service bulletin is intended to adequately address the identified unsafe condition. This service bulletin references JAMCO Service Bulletin MD11–25–1010, dated July 12, 1994, as an additional source of service information for accomplishment of the installation and replacement.

Explanation of Requirements of Proposed Rule

Since an unsafe condition has been identified that is likely to exist or develop on other products of this same type design, the proposed AD would require accomplishment of the actions specified in the McDonnell Douglas service bulletin described previously. The actions are required to be accomplished in accordance with the service bulletin described previously, except as discussed below. The proposed AD also would require that operators perform a one-time visual inspection to detect discrepancies (i.e., corrosion and breakage) of the seat tracks and adjacent structure underneath the subject lavatories.

Differences Between Proposed Rule and Service Bulletin Information

Operators should note that the service bulletins do not provide information regarding a one-time visual inspection to detect discrepancies (i.e., corrosion and breakage) of the seat tracks and adjacent structure underneath lavatories. However, this proposal would require a one-time visual inspection of certain areas described in the JAMCO service bulletin, where lavatories are installed or were previously installed. Additionally, as the service bulletins do not provide inspection procedures they also do not provide repair procedures. However, this proposal would require that repair conditions be dispositioned prior further flight, in accordance with the McDonnell Douglas MD–11 Structural Repair Manual, or in accordance with a method approved by the Manager, Los Angeles Aircraft Certification Office. The FAA finds that this visual inspection to detect discrepancies (i.e., corrosion and breakage) is necessary, so that the corroded area is repaired prior to installation of new seat track fittings.

Cost Impact

There are approximately 143 airplanes of the affected design in the worldwide fleet. The FAA estimates that 46 airplanes of U.S. registry would be affected by this proposed AD, that it would take approximately 40 work hours per airplane to accomplish the proposed inspection, installation, and replacement, and that the average labor rate is $60 per work hour. Required parts would cost less than $1,000 per airplane. Based on these figures, the cost impact of the proposed AD on U.S. operators is estimated to be a maximum of $156,400, or $3,400 per airplane.

The cost impact figure discussed above is based on assumptions that no operator has yet accomplished any of the proposed requirements of this AD action, and that no operator would accomplish those actions in the future if this AD were not adopted.

Regulatory Impact

The regulations proposed herein would not have substantial direct effects on the States, on the relationship between the national government and the States, or on the distribution of power and responsibilities among the various levels of government. Therefore, in accordance with Executive Order 12612, it is determined that this proposal would not have sufficient federalism implications to warrant the preparation of a Federalism Assessment.

For the reasons discussed above, I certify that this proposed regulation (1) is not a ''significant regulatory action'' under Executive Order 12866; (2) is not a ''significant rule'' under the DOT Regulatory Policies and Procedures (44 FR 11034, February 26, 1979); and (3) if promulgated, will not have a significant economic impact, positive or negative, on a substantial number of small entities under the criteria of the Regulatory Flexibility Act. A copy of the draft regulatory evaluation prepared for this action is contained in the Rules Docket. A copy of it may be obtained by contacting the Rules Docket at the location provided under the caption **ADDRESSES**.

List of Subjects in 14 CFR Part 39

Air transportation, Aircraft, Aviation safety, Safety.

The Proposed Amendment

Accordingly, pursuant to the authority delegated to me by the Administrator, the Federal Aviation Administration proposes to amend part 39 of the Federal Aviation Regulations (14 CFR part 39) as follows:

PART 39—AIRWORTHINESS DIRECTIVES

1. The authority citation for part 39 continues to read as follows:

Authority: 49 U.S.C. 106(g), 40113, 44701.

§ 39.13 [Amended]

2. Section 39.13 is amended by adding the following new airworthiness directive:

McDonnell Douglas: Docket 98–NM–71–AD.

Applicability: Model MD–11 series airplanes, as listed in McDonnell Douglas Service Bulletin MD–11–53–043, Revision 02, dated May 28, 1996; certificated in any category.

Note 1: This AD applies to each airplane identified in the preceding applicability provision, regardless of whether it has been modified, altered, or repaired in the area subject to the requirements of this AD. For airplanes that have been modified, altered, or repaired so that the performance of the requirements of this AD is affected, the owner/operator must request approval for an alternative method of compliance in accordance with paragraph (b) of this AD. The request should include an assessment of the effect of the modification, alteration, or repair on the unsafe condition addressed by this AD; and, if the unsafe condition has not been eliminated, the request should include specific proposed actions to address it.

Compliance: Required as indicated, unless accomplished previously.

To detect and correct corrosion of seat tracks and adjacent structure, which could result in shifting of lavatories causing injury to passengers and crew, as well as damage to aircraft structure and systems, accomplish the following:

(a) Within 15 months after the effective date of this AD, conduct a visual inspection to detect discrepancies (i.e., corrosion and breakage) of the seat tracks and adjacent structure at the lavatory locations defined in JAMCO Service Bulletin MD–11–25–1010, dated July 12, 1994.

(1) If no discrepancy is detected, prior to further flight, install a non-metallic barrier on the bottom of each lavatory foot fitting and replace existing seat track fittings with new fittings, in accordance with McDonnell Douglas Service Bulletin MD–11–53–043, Revision 02, dated May 28, 1996.

(2) If any discrepancy is detected, prior to further flight, repair in accordance with the McDonnell Douglas MD–11 Structural Repair Manual, or in accordance with a method approved by the Manager, Los Angeles Aircraft Certification Office (ACO), FAA, Transport Airplane Directorate. Prior to further flight following accomplishment of the repair, install a non-metallic barrier on the bottom of each lavatory foot fitting and replace existing seat track fittings with new fittings, in accordance with McDonnell Douglas Service Bulletin MD–11–53–043, Revision 02, dated May 28, 1996.

(b) An alternative method of compliance or adjustment of the compliance time that provides an acceptable level of safety may be used if approved by the Manager, Los Angeles ACO. Operators shall submit their requests through an appropriate FAA Principal Maintenance Inspector, who may add comments and then send it to the Manager, Los Angeles ACO.

Note 2: Information concerning the existence of approved alternative methods of compliance with this AD, if any, may be obtained from the Los Angeles ACO.

(c) Special flight permits may be issued in accordance with sections 21.197 and 21.199 of the Federal Aviation Regulations (14 CFR 21.197 and 21.199) to operate the airplane to a location where the requirements of this AD can be accomplished.

Issued in Renton, Washington, on August 28, 1998.

Vi L. Lipski,

Acting Manager, Transport Airplane Directorate, Aircraft Certification Service.

[FR Doc. 98–23739 Filed 9–2–98; 8:45 am]

BILLING CODE 4910–13–U

DEPARTMENT OF TRANSPORTATION

Federal Aviation Administration

14 CFR Part 71

[Airspace Docket No. 98–ACE–25]

Proposed Amendment to Class E Airspace; Muscatine, IA

AGENCY: Federal Aviation Administration (FAA), DOT.

ACTION: Notice of proposed rulemaking.

SUMMARY: This document proposes to amend the Class E airspace area at Muscatine Municipal Airport, Muscatine, IA. The FAA has developed Global Positioning System (GPS) Runway (RWY) 6 and VHF Omnidirectional Range (VOR) RWY 24 Standard Instrument Approach Procedures (SIAPs) to serve Muscatine Municipal Airport, IA. Controlled airspace extending upward from 700 feet Above Ground Level (AGL) is necessary to accommodate these SIAPs and for Instrument Flight Rules (IFR) operations at this airport. The area will contain the GPS RWY 6 and VOR RWY 24 in controlled airspace.

In addition, a minor revision to the geographic coordinates for the Muscatine Airport Reference Point (ARP) and Port City VOR/DME are included in this document. The intended effect of this rule is to provide controlled Class E airspace for aircraft executing the GPS RWY 6 and VOR RWY 24 SIAPs, revise the coordinates for the Muscatine Municipal Airport ARP and Port City VOR/DME, and to segregate aircraft using instrument approach procedures in instrument conditions from aircraft operating in visual conditions.

DATES: Comments must be received on or before October 5, 1998.

ADDRESSES: Send comments on the proposal in triplicate to: Manager, Airspace Branch, ACE–520, Federal Aviation Administration, Docket No. 98–ACE–25, 601 East 12th Street, Kansas City, MO 64106.

The official docket may be examined in the Office of the Regional Counsel for the Central Region at the same address between 9:00 a.m. and 3:00 p.m., Monday through Friday, except Federal holidays. An informal docket may also be examined during normal business hours in the office of the Manager, Airspace Branch, Air Traffic Division, at the address listed above.

FOR FURTHER INFORMATION CONTACT: Kathy Randolph, Air Traffic Division, Airspace Branch, ACE–520C, Federal Aviation Administration, 601 East 12th Street, Kansas City, Missouri 64106; telephone number: (816) 426–3408.

SUPPLEMENTARY INFORMATION:

Comments Invited

Interested parties are invited to participate in this proposed rulemaking by submitting such written data, views, or arguments as they may desire. Comments that provide the factual basis supporting the views and suggestions presented are particularly helpful in developing reasoned regulatory decisions on the proposal. Comments are specifically invited on the overall regulatory, economic, environmental, and energy-related aspects of the proposal. Communications should identify the airspace docket number and be submitted in triplicate to the address listed above. Commenters wishing the FAA to acknowledge receipt of their comments on this notice must submit with those comments a self-addressed, stamped postcard on which the following statement is made: ''Comments to Airspace Docket No. 98–ACE–25.'' The postcard will be date/time stamped and returned to the commenter. All communications received on or before the closing date for comments will be considered before taking action on the proposed rule. The proposal contained in this notice may

be changed in light of the comments received. All comments submitted will be available for examination in the Rules Docket both before and after the closing date for comments. A report summarizing each substantive public contact with FAA personnel concerned with this rulemaking will be filed in the docket.

Availability of NPRMs

Any person may obtain a copy of this Notice of Proposed Rulemaking (NPRM) by submitting a request to the Federal Aviation Administration, Office of Public Affairs, Attention: Public Inquiry Center, APA–230, 800 Independence Avenue, SW, Washington, DC 20591, or by calling (202) 267–3484. Communications must identify the notice number of this NPRM. Persons interested in being placed on a mailing list for future NPRMs should also request a copy of Advisory Circular No. 11–2A, which describes the procedures.

The Proposal

The FAA is considering an amendment to 14 CFR part 71 to amend the Class E airspace area at Muscatine, IA. The FAA has developed GPS RWY 6 and VOR RWY 24 SIAPs to serve Muscatine Municipal Airport, Muscatine, IA.

In addition, the Class E airspace area includes a minor revision to the geographic coordinates for the Muscatine Municipal Airport ARP and Port City VOR/DME. The intended effect of this amendment at Muscatine Municipal Airport, IA, will provide segregation of aircraft operating under Instrument Flight Rules (IFR) from aircraft operating in visual weather conditions. The area would be depicted on appropriate aeronautical charts thereby enabling pilots to circumnavigate the area or otherwise comply with IFR procedures. Class E airspace areas extending upward from 700 feet or more above the surface of the earth are published in paragraph 6005 of FAA Order 7400.9E, dated September 10, 1997, and effective September 16, 1997, which is incorporated by reference in 14 CFR 71.1. The Class E airspace designation listed in this document would be published subsequently in the Order.

The FAA has determined that this proposed regulation only involves an established body of technical regulations for which frequent and routine amendments are necessary to keep them operationally current. Therefore, this proposed regulation (1) is not a ''significant regulatory action'' under Executive Order 12866; (2) is not a ''significant rule'' under DOT Regulatory Policies and Procedures (44 FR 11034; February 26, 1979); and (3) does not warrant preparation of a Regulatory Evaluation as the anticipated impact is so minimal. Since this is a routine matter that will only affect air traffic procedures and air navigation, it is certified that this proposed rule will not have a significant economic impact on a substantial number of small entities under the criteria of the Regulatory Flexibility Act.

List of Subjects in 14 CFR Part 71

Airspace, Incorporation by reference, Navigation (air).

The Proposed Amendment

Accordingly, pursuant to the authority delegated to me, the Federal Aviation Administration proposes to amend 14 CFR part 71 as follows:

PART 71—DESIGNATION OF CLASS A, CLASS B, CLASS C, CLASS D, AND CLASS E AIRSPACE AREAS; AIRWAYS; ROUTES; AND REPORTING POINTS

1. The authority citation for part 71 continues to read as follows:

Authority: 49 U.S.C. 106(g), 40103, 40113, 40120; E.O. 10854, 24 FR 9565, 3 CFR, 1959–1963 Comp., p. 389.

§ 71.1 [Amended]

2. The incorporation by reference in 14 CFR 71.1 of Federal Aviation Administration Order 7400.9E, Airspace Designations and Reporting Points, dated September 10, 1997, and effective September 16, 1997, is amended as follows:

Paragraph 6005 Class E airspace area extending upward from 700 feet or more above the surface of the earth

* * * * *

ACE IA E5 Muscatine, IA [Revised]

Muscatine Municipal Airport, IA
(Lat. 41°21′59″ N., long. 91°08′47″ W.)
Port City VOR/DME
(Lat. 41°22′10″ N., long. 91°08′37″ W.)
Muscatine NDB
(Lat. 41°21′44″ N., long. 91°08′46″ W.)

That airspace extending upward from 700 feet or more above the surface of the surface within a 6.5-mile radius of the Muscatine Municipal Airport and within 2.6 miles each side of the 061° radial of the Port City VOR/DME extending from the 6.5-mile radius to 7 miles east of the airport and within 2.6 miles each side of the 248° bearing from the Muscatine NDB extending from the 6.5-mile radius to 7 miles southwest of the airport.

* * * * *

Issued in Kansas City, MO, on August 10, 1998.

Christopher R. Blum,

Acting Manager, Air Traffic Division, Central Region.

[FR Doc. 98–23776 Filed 9–2–98; 8:45 am]

BILLING CODE 4910–13–M

DEPARTMENT OF THE TREASURY

Internal Revenue Service

26 CFR Part 1

[REG–115393–98]

RIN 1545–AW62

Roth IRAs

AGENCY: Internal Revenue Service (IRS), Treasury.

ACTION: Notice of proposed rulemaking and notice of public hearing.

SUMMARY: This document contains proposed regulations relating to Roth IRAs. Roth IRAs were created by the Taxpayer Relief Act of 1997 as a new type of IRA that individuals can use beginning in 1998. The proposed regulations reflect changes relating to Roth IRAs contained in the Internal Revenue Service Restructuring and Reform Act of 1998. The proposed regulations affect individuals establishing Roth IRAs, beneficiaries under Roth IRAs, and trustees, custodians or issuers of Roth IRAs. This document also provides notice of a public hearing on these proposed regulations.

DATES: Written comments must be received by December 2, 1998. Outlines of topics to be discussed at the public hearing scheduled for Thursday, December 10, 1998, at 10 a.m. must be received by Thursday, November 19, 1998.

ADDRESSES: Send submissions to CC:DOM:CORP:R (REG–115393–98), room 5226, Internal Revenue Service, POB 7604, Ben Franklin Station, Washington DC 20044. Submissions may be hand delivered between the hours of 8 a.m. and 5 p.m. to: CC:DOM:CORP:R (REG–106177–97), Courier's Desk, Internal Revenue Service, 1111 Constitution Avenue NW., Washington DC. Alternatively, taxpayers may submit comments electronically via the Internet by selecting the ''Tax Regs'' option on the IRS Home Page, or by submitting comments directly to the IRS Internet site at http://www.irs.ustreas.gov/prod/tax_regs/comments.html. The public hearing will be held in room 2615, Internal Revenue Building, 1111

Constitution Avenue NW, Washington, DC.

FOR FURTHER INFORMATION CONTACT: Concerning the proposed regulations, Cathy A. Vohs, (202) 622–6030; concerning the public hearing, Michael Slaughter (202) 622–7180 (not toll-free numbers).

SUPPLEMENTARY INFORMATION:

Paperwork Reduction Act

The collections of information contained in this notice of proposed rulemaking have been submitted to the Office of Management and Budget for review in accordance with the Paperwork Reduction Act of 1995 (44 U.S.C. 3507(d)). Comments on the collection of information should be sent to the Office of Management and Budget, Attn: Desk Officer for the Department of the Treasury, Office of Information and Regulatory Affairs, Washington DC 20503, with copies to the Internal Revenue Service, Attn: IRS Reports Clearance Officer, OP:FS:FP, Washington, DC 20224. Comments on the collections of information should be received by November 2, 1998. Comments are specifically requested concerning:

Whether the proposed collections of information are necessary for the proper performance of the functions of the IRS, including whether the information will have practical utility;

The accuracy of the estimated burden associated with the proposed collections of information;

How the quality, utility, and clarity of the information to be collected may be enhanced;

How the burden of complying with the proposed collections of information may be minimized, including through the application of automated collection techniques or other forms of information technology; and

Estimates of capital or start-up costs and costs of operation, maintenance, and purchase of service to provide information.

The collections of information in these proposed regulations are in §§ 1.408A–2, 1.408A–4, 1.408A–5, and 1.408A–7. This information is required by the IRS to comply with the provisions of the Taxpayer Relief Act of 1997, and in particular, with section 408A(b), (c), and (d). This information will be used by individuals and businesses or other for-profit institutions, and not-for-profit institutions, such as trustees, custodians or issuers of Roth IRAs, in establishing Roth IRAs and recharacterizing IRA contributions. This information will also be used by: (1) the IRS and individuals converting traditional IRAs to Roth IRAs to calculate the amount includible in gross income on account of such conversions, (2) the IRS and individuals receiving distributions from Roth IRAs to calculate the amount includible in gross income on account of such distributions, (3) the IRS and individuals recharacterizing IRA contributions to properly account for such recharacterizations, and (4) the IRS and trustees, custodians or issuers of Roth IRAs to properly report (a) the amount of contributions to and distributions from Roth IRAs, and (b) recharacterizations of IRA contributions (including Roth IRA contributions). The collections of information are required to obtain the benefit of having a Roth IRA. The likely respondents and/or recordkeepers are individuals, and trustees, custodians, or issuers of Roth IRAs. The burden for (1) calculating the amount includible in gross income on account of conversions and Roth IRA distributions, and (2) accounting for recharacterizations is reflected in the burden for Form 8606. The burden for electing to continue the 4-year spread of income inclusion (only applicable to certain spousal beneficiaries) is reflected in the burden for either Form 8606 or Form 1040, whichever is applicable. The burden for reporting contributions is reflected in the burden for Form 5498. The burden for reporting distributions is reflected in the burden for Form 1099–R. Estimated total annual reporting/recordkeeping burden: 125,000 hours (50,000 hours for designating an IRA as a Roth IRA, plus 75,000 hours for recharacterizing an IRA contribution). Estimated average annual burden per respondent/recordkeeper: 1 minute for designating an IRA as a Roth IRA and 30 minutes for recharacterizing an IRA contribution. Estimated number of respondents/recordkeepers: 3,150,000 (3,000,000 respondents for designating an IRA as a Roth IRA, plus 150,000 respondents for recharacterizing an IRA contribution). Estimated annual frequency of responses: on occasion.

An agency may not conduct or sponsor, and a person is not required to respond to, a collection of information unless it displays a valid control number assigned by the Office of Management and Budget.

Books or records relating to a collection of information must be retained as long as their contents may become material in the administration of any internal revenue law. Generally, tax returns and tax return information are confidential, as required by 26 U.S.C. 6103.

Background

Section 408A of the Internal Revenue Code (Code), which was added by section 302 of the Taxpayer Relief Act of 1997, Public Law 105–34 (111 Stat. 788), establishes the Roth IRA as a new type of individual retirement plan, effective for taxable years beginning on or after January 1, 1998. The provisions of section 408A were amended by the Internal Revenue Service Restructuring and Reform Act of 1998, Public Law 105–206 (112 Stat. 685).

A Roth IRA generally is treated under the Code like a traditional IRA with several significant exceptions. Similar to traditional IRAs, income on undistributed amounts accumulated under a Roth IRA is exempt from Federal income tax, and contributions to Roth IRAs are subject to specific limitations. Unlike traditional IRAs, contributions to Roth IRAs cannot be deducted from gross income, but qualified distributions from Roth IRAs are excludable from gross income. These proposed regulations set forth specific rules for Roth IRAs in accordance with the provisions of section 408A.

Explanation of Provisions

General Provisions and Establishment of Roth IRAs

Proposed § 1.408A–1 contains general provisions regarding Roth IRAs, and proposed § 1.408A–1 contains provisions regarding the establishment of Roth IRAs. As described in proposed § 1.408A–1, a Roth IRA is treated for Federal tax purposes in the same manner as an individual retirement plan except as otherwise provided in section 408A and the proposed regulations. Thus, all the rules of section 408 and the regulations under section 408 apply to Roth IRAs to the extent they are not inconsistent with section 408A or these proposed regulations.

Section 408A(b) defines a Roth IRA as an individual retirement plan which is designated at the time of its establishment as a Roth IRA. That section also grants the Secretary of the Treasury authority to prescribe the manner for designating an individual retirement plan as a Roth IRA. Proposed § 1.408A–2 provides that a Roth IRA instrument must clearly designate the IRA as a Roth IRA, and that designation cannot later be changed. Thus, a taxpayer may not designate an IRA as a Roth IRA and later redesignate the Roth IRA as a traditional IRA or otherwise treat the Roth IRA as though it were a traditional IRA for Federal tax purposes.

Regular Contributions

Proposed § 1.408A–3 sets forth rules regarding regular (i.e., non-conversion) contributions to a Roth IRA. Unlike contributions to traditional IRAs, contributions to Roth IRAs are not deductible under any circumstances. A taxpayer's regular contributions to all his or her Roth IRAs for a year are limited to the lesser of $2,000 or the taxpayer's compensation for that year. As with traditional IRAs, a special rule for married taxpayers permits one spouse to treat the other spouse's compensation as his or her own for purposes of the limit on regular contributions. The limit is reduced by any amounts that the taxpayer contributes for that year to an individual retirement plan other than a Roth IRA (although employer contributions, including elective contributions, to a SEP or SIMPLE IRA Plan do not reduce the contribution limit). Additionally, the contribution limit (determined without regard to any reduction for traditional IRA contributions) is phased out for modified adjusted gross income between $95,000 and $110,000 for single taxpayers, between $150,000 and $160,000 for married taxpayers filing joint returns, and between $0 and $10,000 for married taxpayers filing separate returns. Any contribution in excess of the contribution limit is subject to the 6-percent excise tax under section 4973 unless it is distributed to the taxpayer (with allocable net income) under section 408(d)(4) by the Federal income tax return due date (with extensions) for the year of the contribution.

The proposed regulations define the terms compensation and modified adjusted gross income. The definition of compensation is the same as that applicable under section 219(f)(1) for determining the amount, if any, that a taxpayer may contribute to a traditional IRA. This definition does not include amounts transferred from one individual to another by gift (for example, a gift from a parent to a child). The definition of modified adjusted gross income is based on the definition of adjusted gross income applicable under section 219(g)(3)(A) for determining the amount, if any, that a taxpayer may deduct for a contribution to a traditional IRA where the taxpayer is an active participant in an employee plan. However, the definition of modified adjusted gross income applicable to Roth IRAs provides that any amount includible in gross income because of a Roth IRA conversion is disregarded in determining modified adjusted gross income. Additionally, for taxable years beginning after December 31, 2004, modified adjusted gross income does not include the amount of any required minimum distribution from an IRA for purposes of determining conversion eligibility.

As with traditional IRAs, regular contributions to a Roth IRA may be made as late as the Roth IRA owner's Federal income tax return due date (not including extensions) for the taxable year to which they relate. Thus, Roth IRA contributions may be made by most taxpayers for taxable year 1998 at any time until April 15, 1999. Unlike traditional IRAs, contributions to a Roth IRA may be made after the Roth IRA owner has reached age 70½.

Conversions

Proposed § 1.408A–4 provides rules regarding Roth IRA conversions. In general, a taxpayer whose modified adjusted gross income does not exceed $100,000 may ''convert'' an amount held in a non-Roth IRA (i.e., a traditional IRA or SIMPLE IRA) to a Roth IRA. The conversion may be made in one of three ways: (1) a distribution from a non-Roth IRA may be rolled over to a Roth IRA within 60 days; (2) an amount in a non-Roth IRA of one financial institution may be transferred in a trustee-to-trustee transfer to a Roth IRA of a different financial institution; or (3) an amount in a non-Roth IRA may be transferred to a Roth IRA of the same financial institution. (In the third case, no physical transfer of assets is necessary, but the instrument governing the non-Roth IRA must, of course, be replaced by a Roth IRA instrument.) The conversion amount must be a qualified rollover contribution under section 408A(e) and, therefore, must satisfy section 408(d)(3) (other than the one-rollover-per-year rule of that section). Any amount distributed from a non-Roth IRA prior to the 1998 taxable year may not be contributed to a Roth IRA as a conversion contribution.

In the case of a conversion made by means of a distribution and rollover contribution, the $100,000 limit applies to the year in which the distribution from the non-Roth IRA is made. For married taxpayers, the $100,000 limit applies to the joint modified adjusted gross income of the couple, and a married taxpayer filing a separate return is not allowed to convert regardless of modified adjusted gross income (although a taxpayer who has lived apart from his or her spouse for the entire taxable year is treated as not married for these purposes).

The proposed regulations provide that amounts held in a SEP IRA or a SIMPLE IRA may be converted to a Roth IRA. In the case of a SIMPLE IRA, a conversion may be done only after the expiration of the 2-year period described in section 72(t)(6). See Q&A I–2 of Notice 98–4 (1998–2 I.R.B. 25). Once a SEP IRA or SIMPLE IRA has been converted to a Roth IRA, the SEP IRA or the SIMPLE IRA becomes a Roth IRA and ceases to be part of a SEP or a SIMPLE IRA Plan; thus, no SEP or SIMPLE IRA Plan contributions may be made to the Roth IRA. Amounts held in retirement plans other than IRAs—such as section 401(a) qualified plans and section 403(b) annuity contracts—cannot be directly converted to a Roth IRA.

Any amount converted from a non-Roth IRA to a Roth IRA is treated as distributed from the non-Roth IRA and rolled over to the Roth IRA regardless of the actual means by which the conversion is effected. The conversion amount is generally includible in gross income for the year of the conversion under sections 408(d)(1) and 408(d)(2). For this purpose, in the case of a conversion effected by an actual distribution and rollover contribution (rather than a trustee-to-trustee transfer or a transfer between IRAs of the same financial institution), the year of the distribution from the non-Roth IRA is the year that the conversion amount is includible in gross income.

The conversion amount generally is not subject to the 10-percent additional tax under section 72(t). However, section 408A(d)(3)(F) provides that the 10-percent tax applies to a distribution of a conversion amount made within the 5-taxable-year period beginning with the taxable year in which the conversion to which it is attributable was made. Additionally, the proposed regulations provide that a taxpayer s conversion of an amount from a non-Roth IRA from which the taxpayer was receiving a series of substantially equal periodic payments under section 72(t)(2)(A)(iv) will not be treated as a modification of that series under section 72(t)(4) and thus will not trigger recapture of the section 72(t) tax on previous distributions from the non-Roth IRA as long as the series of substantially equal periodic payments is continued under the Roth IRA (or if section 72(t)(4) would otherwise not apply).

Taxpayers making conversions during 1998 are eligible for a 4-year spread under which a conversion amount can be included in income ratably over taxable years 1998 through 2001 rather than solely in 1998. Special rules apply to this 4-year spread if a taxpayer dies before inclusion of the full conversion amount. In such a case, any remaining includible portion of the conversion amount generally must be included in

the taxpayer s gross income for the taxable year that includes the date of his or her death. However, if the taxpayer's surviving spouse is the sole beneficiary of all the taxpayer's Roth IRAs (as determined under the aggregation rule of section 408A(d)(4)(A)), the spouse may elect to continue application of the 4-year spread. Finally, the distribution of any amount attributable to a 1998 conversion to which the 4-year spread applies will accelerate the inclusion of any amount otherwise deferred to a later taxable year.

A required minimum distribution may not be converted to a Roth IRA because section 408(d)(3)(E) prohibits the rollover of any such distribution. Under the proposed regulations, if a non-Roth IRA owner has reached age 70½, any amount distributed (or treated as distributed because of a conversion) from the IRA for that year consists of the required minimum distribution to the extent that an amount equal to the required minimum distribution for that year has not yet been distributed (or treated as distributed). Thus, if a taxpayer who is required to receive a minimum distribution of $10,000 from his or her non-Roth IRA for a taxable year attempts to convert $11,000 to a Roth IRA prior to receiving the required minimum distribution, $10,000 of the conversion amount would be treated as the required minimum distribution and would be ineligible for conversion. This result is not affected by the means through which the taxpayer effects the conversion or by whether an amount greater than or equal to $10,000 remains in the taxpayer's non-Roth IRA after the conversion.

Recharacterizations of IRA Contributions

Proposed § 1.408A–5 provides special rules for the recharacterization of IRA contributions (including Roth IRA regular and conversion contributions). Section 408A(d)(6) provides that, except as otherwise provided by the Secretary of the Treasury, an IRA contribution that is transferred to another IRA in a trustee-to-trustee transfer on or before the Federal income tax return due date (with extensions) for the taxable year of the contribution is treated as made to the transferee IRA and not the transferor IRA. Section 408A(d)(6) requires that the transfer include allocable net income on the contribution and that no deduction be allowed for the contribution to the transferor IRA. This statutory provision was intended to permit a taxpayer who had converted an amount held in a non-Roth IRA to a Roth IRA and later discovered that his or her modified adjusted gross income for the year of the conversion exceeded $100,000 to correct the conversion by retransferring the converted amount to a non-Roth IRA. The proposed regulations interpret section 408A(d)(6) liberally to provide broad relief to taxpayers who wish to change the nature of an IRA contribution (and not only to allow taxpayers to correct Roth IRA conversions for which they were ineligible). Moreover, the proposed regulations make application of section 408A(d)(6) elective by the taxpayer and permit the taxpayer to recharacterize all or any portion of an IRA contribution.

Under the proposed regulations, a taxpayer may elect whether to recharacterize a contribution made to one type of IRA by having it transferred in a trustee-to-trustee transfer to a different type of IRA. As with a conversion, a recharacterization can be effected simply by transferring IRA assets between two IRAs of a single financial institution. Regardless of how effected, a recharacterization transfer is not considered a rollover for purposes of the one-rollover-per-year rule of section 408(d)(3). The taxpayer makes the election to recharacterize by notifying both the transferor IRA trustee and the transferee IRA trustee and by providing certain information to these trustees (including a direction to make the transfer). Notification to the trustees constitutes the taxpayer's election to apply section 408A(d)(6), and the taxpayer cannot revoke or modify that election after the recharacterization transfer has been made. A recharacterized contribution will be treated for Federal income tax purposes as having been contributed to the transferee IRA (rather than the transferor IRA) on the same date and for the same taxable year that the contribution was initially made to the transferor IRA. In effect, the transferee IRA ''steps into the shoes'' of the transferor IRA with respect to the taxpayer's original contribution.

The recharacterization transfer must include allocable earnings on the original contribution, and the proposed regulations provide that the rules of Treasury Regulations § 1.408–4(c)(2)(ii) apply for determining such allocable earnings. If the original contribution has experienced net losses as of the time of the recharacterization, the transfer of the entire original contribution less such losses will generally constitute a transfer of the entire contribution. The taxpayer must treat the contribution as made to the transferee IRA on his or her Federal income tax return for the year to which the original contribution (to the transferor IRA) relates.

Amounts that cannot be recharacterized include amounts paid into an IRA by tax-free rollover or transfer (other than a rollover or transfer from a traditional IRA to a SIMPLE IRA) and employer contributions under a SIMPLE IRA Plan or a SEP. The proposed regulations also provide that, once an amount has been contributed to an IRA, any tax-free rollover or transfer of that amount to another IRA may be disregarded in applying the recharacterization rules. Thus, for example, if a taxpayer contributes $2,000 to a Roth IRA during a taxable year and rolls that contribution over to another Roth IRA during the following taxable year, the rollover between Roth IRAs is disregarded, and the taxpayer may recharacterize the $2,000 Roth IRA contribution by having it transferred from the second Roth IRA to a traditional IRA in accordance with section 408A(d)(6) and the proposed regulations.

Distributions

Proposed § 1.408A–6 provides rules for the treatment of Roth IRA distributions. Under section 408A(d), qualified distributions from a Roth IRA are not includible in gross income. A qualified distribution is a distribution that is both (1) made after the end of the 5-taxable-year period that begins with the first taxable year for which an individual first makes any regular or conversion contribution to a Roth IRA and (2) made at any time after the Roth IRA owner has reached age 59½, made to a beneficiary (or to the Roth IRA owner's estate) after the Roth IRA owner's death, attributable to the Roth IRA owner's being disabled within the meaning of section 72(m)(7), or made for a first-time home purchase to which section 72(t)(2)(F) applies. The proposed regulations provide that any distribution from a Roth IRA made to the surviving spouse of a Roth IRA owner who has elected to treat the Roth IRA as his or her own in accordance with the terms of the trust instrument or under Q&A–4 of Proposed Treasury Regulations § 1.408–8 is not treated as made after the Roth IRA owner's death.

The proposed regulations provide that the 5-taxable-year period for determining whether a distribution is a qualified distribution is not recalculated when a Roth IRA owner dies. Thus, if a Roth IRA owner contributes an amount to a Roth IRA in 1998 and dies in 2004, a distribution made to a beneficiary in 2004 will be a qualified distribution. Generally, the 5-taxable-year period with respect to a beneficiary's inherited Roth IRA is determined independently of the 5-

taxable-year period for any Roth IRA of which the beneficiary is the owner. However, if the beneficiary of a Roth IRA is the surviving spouse of the Roth IRA owner and if the surviving spouse owns his or her own Roth IRA, the 5-taxable-year period for both the Roth IRA of which the surviving spouse is the beneficiary and the Roth IRA of which the surviving spouse is the owner ends with the earlier of the 5-taxable-year periods for the two Roth IRAs.

A Roth IRA distribution other than a qualified distribution is generally includible in the taxpayer's gross income to the extent that the distribution, when added to all prior distributions from the taxpayer's Roth IRAs (whether or not those distributions were qualified distributions) exceeds the taxpayer's total contributions to all his or her Roth IRAs. To the extent includible in gross income, such a distribution will also be subject to the 10-percent additional tax of section 72(t) unless there is an applicable exception under that section. Such a distribution, however, will not be includible in gross income if it is rolled over to another Roth IRA in accordance with section 408(d)(3). Also, a distribution of an excess contribution under section 408(d)(4) is not includible in gross income (although the allocable net income that must be distributed with the excess contribution is includible in gross income for the taxable year of the excess contribution).

The proposed regulations provide aggregation and ordering rules for Roth IRAs in accordance with section 408A(d)(4). Under these rules, a Roth IRA is not aggregated with a non-Roth IRA, but all a taxpayer's Roth IRAs are aggregated with each other. Roth IRA distributions are treated as made first from Roth IRA contributions and second from earnings. Distributions that are treated as made from contributions are treated as made first from regular contributions and then from conversion contributions on a first-in, first-out basis. A distribution allocable to a particular conversion contribution is treated as consisting first of the portion (if any) of the conversion contribution that was includible in gross income by reason of the conversion.

The proposed regulations provide that, in applying these aggregation and ordering rules: all distributions from all of a taxpayer's Roth IRAs during a taxable year are aggregated; all regular contributions made for the same taxable year to all the individual's Roth IRAs are aggregated and added to the undistributed total regular contributions for prior taxable years; all conversion contributions received during the same taxable year by all the individual's Roth IRAs are aggregated (with a special rule for a conversion contribution made by distribution during 1998 and rollover during 1999 to which the 4-year spread applies); and rollovers between Roth IRAs are disregarded. The proposed regulations also provide special rules for applying the aggregation and ordering rules in the case of recharacterizations under section 408A(d)(6). Distributions of excess contributions and allocable net income pursuant to section 408(d)(4) are treated differently under the ordering rules. Specifically, an excess contribution that is distributed under section 408(d)(4) is treated as though it was never contributed, and any allocable net income thereon is includible in gross income for the taxable year of the contribution without regard to whether the taxpayer still has undistributed basis in his or her Roth IRAs. The proposed regulations provide that, for purposes of these ordering rules, different types of contributions are allocated pro rata among multiple Roth IRA beneficiaries after the Roth IRA owner's death.

Unlike traditional IRAs, the pre-death minimum distribution rules of sections 408(a)(6) and 408(b)(3) (which incorporate the rules of section 401(a)(9)) do not apply to Roth IRAs. Under the proposed regulations, on the death of a Roth IRA owner, the rules in Proposed Treasury Regulations § 1.408–8 apply as though the Roth IRA owner died before his or her required beginning date. Thus, the entire amount of the Roth IRA must generally be distributed within five years of the Roth IRA owner's death unless it is distributed over the life expectancy of a designated beneficiary beginning prior to the end of the calendar year following the year of the owner's death. The proposed regulations also provide that, where the sole beneficiary of a Roth IRA is the Roth IRA owner's surviving spouse, the spouse may delay distributions until the Roth IRA owner would have reached age 70½ or may treat the Roth IRA as his or her own. Under the proposed regulations, section 401(a)(9) applies separately to Roth IRAs and other retirement plans; it also applies separately to Roth IRAs inherited by a beneficiary from one decedent and any other Roth IRAs of which the beneficiary is either the beneficiary of another decedent or the owner.

The proposed regulations provide that section 3405 withholding applies to distributions from Roth IRAs and to Roth IRA conversions (although transition relief is provided for 1998 conversions effected by means of direct transfers of funds between IRAs). The proposed regulations provide that the basis of property distributed from a Roth IRA is its fair market value as of the date of the distribution and that any amount distributed from a Roth IRA and contributed to a retirement plan other than a Roth IRA is not a rollover contribution under section 408(d)(3) or a qualified rollover contribution under section 408A(e). The proposed regulations also provide that a transfer of a Roth IRA by gift would constitute an assignment of the Roth IRA, with the effect that the assets of the Roth IRA would be deemed to be distributed to the Roth IRA owner and, accordingly, treated as no longer held in a Roth IRA.

Reporting Requirements

Proposed 1.408A–7 sets out the reporting requirements applicable to Roth IRAs. In general, Roth IRA trustees (including custodians and issuers) are subject to the same reporting requirements that apply to trustees of traditional IRAs. However, the instructions to applicable Federal tax forms modify the information generally required from Roth IRA trustees (as well as Roth IRA owners) in certain circumstances. For example, conversions require the filing of a Form 1099–R and a Form 8606. The proposed regulations include special rules for reporting of recharacterization transactions. Trustees are permitted to rely on reasonable representations of a Roth IRA owner or distributee in discharging their reporting obligations.

The IRS is issuing additional guidance on the reporting requirements applicable to Roth IRAs and on other changes in the laws relating to IRAs. This guidance will be in the form of a notice published in the Internal Revenue Bulletin.

Reliance

Taxpayers may rely on these proposed regulations for guidance pending the issuance of final regulations. If, and to the extent, future guidance is more restrictive than the guidance in these proposed regulations, the future guidance will be applied without retroactive effect.

Proposed Effective Date

These regulations are applicable to taxable years beginning on or after January 1, 1998, the effective date for section 408A.

Special Analyses

It has been determined that this notice of proposed rulemaking is not a significant regulatory action as defined in Executive Order 12866. Therefore, a

regulatory assessment is not required. It also has been determined that section 553(b) of the Administrative Procedure Act (5 U.S.C. chapter 5) does not apply to these regulations. Further, it is hereby certified, pursuant to sections 603(a) and 605(b) of the Regulatory Flexibility Act, that the collection of information in these regulations will not have a significant economic impact on a substantial number of small entities. The cost of the collection information is insignificant because the primary reporting burden is on the individual and not the small entity. Therefore the collection of information will not have a substantial economic impact. Therefore, a regulatory flexibility analysis under the Regulatory Flexibility Act (5 U.S.C. chapter 6) is not required. Pursuant to section 7805(f) of the Internal Revenue Code, this notice of proposed rulemaking will be submitted to the Chief Counsel for Advocacy of the Small Business Administration for comment on its impact on small business.

Comments and Public Hearing

Before these proposed regulations are adopted as final regulations, consideration will be given to any written comments (preferably a signed original and eight (8) copies) that are submitted timely to the IRS. All comments will be available for public inspection and copying.

A public hearing has been scheduled for Thursday, December 10, 1998, beginning at 10 a.m. in room 2615 of the Internal Revenue Building, 1111 Constitution Avenue, NW, Washington, DC. Because of access restrictions, visitors will not be admitted beyond the Internal Revenue Building lobby more than 15 minutes before the hearing starts.

The rules of 26 CFR 601.601(a)(3) apply to the hearing.

Persons who wish to present oral comments at the hearing must submit written comments and an outline of the topics to be discussed and the time to be devoted to each topic (preferably a signed original and eight (8) copies) by Thursday, November 19, 1998.

A period of 10 minutes will be allotted to each person for making comments.

An agenda showing the scheduling of the speakers will be prepared after the deadline for receiving outlines has passed. Copies of the agenda will be available free of charge at the hearing.

Drafting Information

The principal author of the proposed regulations is Cathy A. Vohs, Office of Associate Chief Counsel (Employee Benefits and Exempt Organizations). However, other personnel from the IRS and Treasury Department participated in their development.

List of Subjects in 26 CFR Part 1

Income taxes, Reporting and recordkeeping requirements.

Proposed Amendments to the Regulations

Accordingly, 26 CFR part 1 is proposed to be amended as follows:

PART 1—INCOME TAXES

Paragraph 1. The authority citation for part 1 is amended by adding entries in numerical order to read in part as follows:

Authority: 26 U.S.C. 7805 * * *

§ 1.408A–1 also issued under 26 U.S.C. 408A.

§ 1.408A–2 also issued under 26 U.S.C. 408A.

§ 1.408A–3 also issued under 26 U.S.C. 408A.

§ 1.408A–4 also issued under 26 U.S.C. 408A.

§ 1.408A–5 also issued under 26 U.S.C. 408A.

§ 1.408A–6 also issued under 26 U.S.C. 408A.

§ 1.408A–7 also issued under 26 U.S.C. 408A.

§ 1.408A–8 also issued under 26 U.S.C. 408A.

§ 1.408A–9 also issued under 26 U.S.C. 408A. * * *

Par. 2. An undesignated centerheading and §§ 1.408A–0 through 1.408A–9 are added to read as follows:

Roth IRAs; Questions and Answers

§ 1.408A–0 Table of contents.

This table of contents lists the regulations relating to Roth IRAs under section 408A of the Internal Revenue Code as follows:

§ 1.408A–1 Roth IRAs in general.
§ 1.408A–2 Establishing a Roth IRA.
§ 1.408A–3 Contributions to Roth IRAs.
§ 1.408A–4 Converting amounts to Roth IRAs.
§ 1.408A–5 Recharacterized contributions.
§ 1.408A–6 Distributions.
§ 1.408A–7 Reporting.
§ 1.408A–8 Definitions.
§ 1.408A–9 Effective date.

§ 1.408A–1 Roth IRAs in general.

Q–1 What is a Roth IRA?

A–1. (a) A Roth IRA is a new type of individual retirement plan that individuals can use, beginning in 1998. Roth IRAs are described in section 408A, which was added by the Taxpayer Relief Act of 1997 (TRA 97), Public Law 105–34 (111 Stat. 788).

(b) Roth IRAs are treated like traditional IRAs except where the Internal Revenue Code specifies different treatment. For example, aggregate contributions (other than by a conversion or other rollover) to all an individual's Roth IRAs are not permitted to exceed $2,000 for a taxable year. Further, income earned on funds held in a Roth IRA is generally not taxable. Similarly, the rules of section 408(e), such as the loss of exemption of the account where the owner engages in a prohibited transaction, apply to Roth IRAs in the same manner as to traditional IRAs.

Q–2. What are the significant differences between traditional IRAs and Roth IRAs?

A–2. There are several significant differences between traditional IRAs and Roth IRAs under the Internal Revenue Code. For example, eligibility to contribute to a Roth IRA is subject to special modified AGI (adjusted gross income) limits; contributions to a Roth IRA are never deductible; qualified distributions from a Roth IRA are not includible in gross income; the required minimum distribution rules under section 408(a)(6) and (b)(3) (which generally incorporate the provisions of section 401(a)(9)) do not apply to a Roth IRA during the lifetime of the owner; and contributions to a Roth IRA can be made after the owner has attained age 70½.

§ 1.408A–2 Establishing a Roth IRA.

Q–1. Who can establish a Roth IRA?

A–1. Except as provided in A–3 of this section, only an individual can establish a Roth IRA. In addition, in order to be eligible to contribute to a Roth IRA for a particular year, an individual must satisfy certain compensation requirements and adjusted gross income limits (see § 1.408A–3 A–3).

Q–2. How is a Roth IRA established?

A–2. A Roth IRA can be established with any bank, insurance company, or other person authorized in accordance with § 1.408–2(e) to serve as a trustee with respect to IRAs. The document establishing the Roth IRA must clearly designate the IRA as a Roth IRA, and this designation cannot be changed at a later date. Thus, an IRA that is designated as a Roth IRA cannot later be treated as a traditional IRA. However, see § 1.408A–5 for rules for recharacterizing certain IRA contributions.

Q–3. Can an employer or an association of employees establish a Roth IRA to hold contributions of employees or members?

A–3. Yes. Pursuant to section 408(c), an employer or an association of employees can establish a trust to hold

contributions of employees or members made under a Roth IRA. Each employee's or member's account in the trust is treated as a separate Roth IRA that is subject to the generally applicable Roth IRA rules. The employer or association of employees may do certain acts otherwise required by an individual, for example, establishing and designating a trust as a Roth IRA.

Q–4. What is the effect of a surviving spouse of a Roth IRA owner treating an IRA as his or her own?

A–4. If the surviving spouse of a Roth IRA owner treats a Roth IRA as his or her own as of a date, from that date forward, the Roth IRA is treated as though it were established for the benefit of the surviving spouse and not the original Roth IRA owner. Thus, for example, the surviving spouse is treated as the Roth IRA owner for purposes of applying the minimum distribution requirements under section 408(a)(6) and (b)(3). Similarly, the surviving spouse is treated as the Roth IRA owner rather than a beneficiary for purposes of determining the amount of any distribution from the Roth IRA that is includible in gross income and whether the distribution is subject to the 10-percent additional tax under section 72(t).

§ 1.408A–3 Contributions to Roth IRAs.

Q–1. What types of contributions are permitted to be made to a Roth IRA?

A–1. There are two types of contributions that are permitted to be made to a Roth IRA: regular contributions and qualified rollover contributions (including conversion contributions). The term regular contributions means contributions other than qualified rollover contributions.

Q–2. When are contributions permitted to be made to a Roth IRA?

A–2. (a) The provisions of section 408A are effective for taxable years beginning on or after January 1, 1998. Thus, the first taxable year for which contributions are permitted to be made to a Roth IRA by an individual is the individual's taxable year beginning in 1998.

(b) Regular contributions for a particular taxable year must generally be contributed by the due date (not including extensions) for filing a Federal income tax return for that taxable year. (See § 1.408A–5 regarding recharacterization of certain contributions.)

Q–3. What is the maximum aggregate amount of regular contributions an individual is eligible to contribute to a Roth IRA for a taxable year?

A–3. (a) The maximum aggregate amount that an individual is eligible to contribute to all his or her Roth IRAs as a regular contribution for a taxable year is the same as the maximum for traditional IRAs: $2,000 or, if less, that individual's compensation for the year.

(b) For Roth IRAs, the maximum amount described in paragraph (a) of this A–3 is phased out between certain levels of modified AGI. For an individual who is not married, the dollar amount is phased out ratably between modified AGI of $95,000 and $110,000; for a married individual filing a joint return, between modified AGI of $150,000 and $160,000; and for a married individual filing separately, between modified AGI of $0 and $10,000. For this purpose, a married individual who has lived apart from his or her spouse for the entire taxable year and who files separately is treated as not married. Under section 408A(c)(3)(A), in applying the phase-out, the maximum amount is rounded up to the next higher multiple of $10 and is not reduced below $200 until completely phased out.

(c) If an individual makes regular contributions to both traditional IRAs and Roth IRAs for a taxable year, the maximum limit for the Roth IRA is the lesser of—

(1) The amount described in paragraph (a) of this A–3 reduced by the amount contributed to traditional IRAs for the taxable year; and

(2) The amount described in paragraph (b) of this A–3. Employer contributions, including elective deferrals, made under a SEP or SIMPLE IRA Plan on behalf of an individual (including a self-employed individual) do not reduce the amount of the individual's maximum regular contribution.

(d) The rules in this A–3 are illustrated by the following examples:

Example 1. In 1998, unmarried, calendar-year taxpayer B, age 60, has modified AGI of $40,000 and compensation of $5,000. For 1998, B can contribute a maximum of $2,000 to a traditional IRA, a Roth IRA or a combination of traditional and Roth IRAs.

Example 2. The facts are the same as in *Example 1.* However, assume that B violates the maximum regular contribution limit by contributing $2,000 to a traditional IRA and $2,000 to a Roth IRA for 1998. The $2,000 to B's Roth IRA would be an excess contribution to B's Roth IRA for 1998 because an individual's contributions are applied first to a traditional IRA, then to a Roth IRA.

Example 3. The facts are the same as in *Example 1,* except that B's compensation is $900. The maximum amount B can contribute to either a traditional IRA or a Roth (or a combination of the two) for 1998 is $900.

Example 4. In 1998, unmarried, calendar-year taxpayer C, age 60, has modified AGI of $100,000 and compensation of $5,000. For 1998, C contributes $800 to a traditional IRA and $1,200 to a Roth IRA. Because C's $1,200 Roth IRA contribution does not exceed the phased-out maximum Roth IRA contribution of $1,340 and because C's total IRA contributions do not exceed $2,000, C's Roth IRA contribution does not exceed the maximum permissible contribution.

Q–4. How is compensation defined for purposes of the Roth IRA contribution limit?

A–4. For purposes of the contribution limit described in A–3 of this section, an individual's compensation is the same as that used to determine the maximum contribution an individual can make to a traditional IRA. This amount is defined in section 219(f)(1) to include wages, commissions, professional fees, tips, and other amounts received for personal services, as well as taxable alimony and separate maintenance payments received under a decree of divorce or separate maintenance. Compensation also includes earned income as defined in section 401(c)(2), but does not include any amount received as a pension or annuity or as deferred compensation. In addition, under section 219(c), a married individual filing a joint return is permitted to make an IRA contribution by treating his or her spouse's higher compensation as his or her own, but only to the extent that the spouse's compensation is not being used for purposes of the spouse making a contribution to a Roth IRA or a deductible contribution to a traditional IRA.

Q–5. What is the significance of modified AGI and how is it determined?

A–5. Modified AGI is used for purposes of the phase-out rules described in A–3 of this section and for purposes of the $100,000 modified AGI limitation described in § 1.408A–4 A–2(a) (relating to eligibility for conversion). As defined in section 408A(c)(3)(C)(i), modified AGI is the same as adjusted gross income under section 219(g)(3)(A) (used to determine the amount of deductible contributions that can be made to a traditional IRA by an individual who is an active participant in an employer-sponsored retirement plan), except that any conversion is disregarded in determining modified AGI. For example, the deduction for contributions to an IRA is not taken into account for purposes of determining adjusted gross income under section 219 and thus does not apply in determining modified AGI for Roth IRA purposes.

Q–6. Is a required minimum distribution from an IRA for a year

included in income for purposes of determining modified AGI?

A–6. (a) Yes. For taxable years beginning before January 1, 2005, any required minimum distribution from an IRA under section 408(a)(6) and (b)(3) (which generally incorporate the provisions of section 401(a)(9)) is included in income for purposes of determining modified AGI.

(b) For taxable years beginning after December 31, 2004, and solely for purposes of the $100,000 limitation applicable to conversions, modified AGI does not include any required minimum distributions from an IRA under section 408(a)(6) and (b)(3).

Q–7. Does an excise tax apply if an individual exceeds the aggregate regular contribution limits for Roth IRAs?

A–7. Yes. Section 4973 imposes an annual 6-percent excise tax on aggregate amounts contributed to Roth IRAs that exceed the maximum contribution limits described in A–3 of this section. Any contribution that is distributed, together with net income, from a Roth IRA on or before the tax return due date (plus extensions) for the taxable year of the contribution is treated as not contributed. Net income described in the previous sentence is includible in gross income for the taxable year in which the contribution is made. Section 4973 applies separately to an individual's Roth IRAs and other IRAs.

§ 1.408A–4 Converting amounts to Roth IRAs.

Q–1. Can an individual convert an amount in his or her traditional IRA to a Roth IRA?

A–1. (a) Yes. An amount in a traditional IRA may be converted to an amount in a Roth IRA if two requirements are satisfied. First, the IRA owner must satisfy the modified AGI limitation described in A–2(a) of this section and, if married, the joint filing requirement described in A–2(b) of this section. Second, the amount contributed to the Roth IRA must satisfy the definition of a qualified rollover contribution in section 408A(e) (i.e., it must satisfy the requirements for a rollover contribution as defined in section 408(d)(3), except that the one-rollover-per-year limitation in section 408(d)(3)(B) does not apply).

(b) An amount can be converted by any of three methods—

(1) An amount distributed from a traditional IRA is contributed (rolled over) to a Roth IRA within 60 days after the distribution;

(2) An amount in a traditional IRA is transferred in a trustee-to-trustee transfer from the trustee of the traditional IRA to the trustee of the Roth IRA; or

(3) An amount in a traditional IRA is transferred to a Roth IRA maintained by the same trustee.

(c) Any converted amount is treated as a distribution from the traditional IRA and a qualified rollover contribution to the Roth IRA for purposes of section 408 and section 408A, even if the conversion is accomplished by means of a trustee-to-trustee transfer or a transfer between IRAs of the same trustee.

Q–2. What are the modified AGI limitation and joint filing requirements for conversions?

A–2. (a) An individual with modified AGI in excess of $100,000 for a taxable year is not permitted to convert an amount to a Roth IRA during that taxable year. This $100,000 limitation applies to the taxable year that the funds are paid from the traditional IRA, rather than the year they are contributed to the Roth IRA.

(b) If the individual is married, he or she is permitted to convert an amount to a Roth IRA during a taxable year only if the individual and the individual's spouse file a joint return for the taxable year that the funds are paid from the traditional IRA. In this case, the modified AGI subject to the $100,000 limit is the modified AGI derived from the joint return using the couple's combined income. The only exception to this joint filing requirement is for an individual who has lived apart from his or her spouse for the entire taxable year. If the married individual has lived apart from his or her spouse for the entire taxable year, then such individual can treat himself or herself as not married for purposes of this paragraph, file a separate return and be subject to the $100,000 limit on his or her separate modified AGI. In all other cases, a married individual filing a separate return is not permitted to convert an amount to a Roth IRA, regardless of the individual's modified AGI.

Q–3. Is a remedy available to an individual who, intending to make a conversion, contributes amounts from a traditional IRA to a Roth IRA, but who is ineligible to make a conversion (a failed conversion)?

A–3. (a) Yes. See § 1.408A–5 for rules permitting a failed conversion amount to be recharacterized as a contribution to a traditional IRA. If the requirements in § 1.408A–5 are satisfied, the failed conversion amount will be treated as having been contributed to the traditional IRA and not to the Roth IRA.

(b) If the contribution is not recharacterized in accordance with § 1.408A–5, the contribution will be treated as a regular contribution to the Roth IRA and, thus, an excess contribution subject to the excise tax under section 4973 to the extent that it exceeds the individual's regular contribution limit. Additionally, the distribution from the traditional IRA will not be eligible for the 4-year spread and will be subject to the additional tax under section 72(t) (unless an exception under that section applies).

Q–4. Do any special rules apply to a conversion of an amount in an individual's SEP IRA or SIMPLE IRA to a Roth IRA?

A–4. (a) An amount in an individual's SEP IRA can be converted to a Roth IRA on the same terms as an amount in any other traditional IRA.

(b) An amount in an individual's SIMPLE IRA can be converted to a Roth IRA on the same terms as a conversion from a traditional IRA, except that an amount distributed from a SIMPLE IRA during the 2-year period described in section 72(t)(6), which begins on the date that the individual first participated in any SIMPLE IRA Plan maintained by the individual's employer, cannot be converted to a Roth IRA. Pursuant to section 408(d)(3)(G), a distribution of an amount from an individual's SIMPLE IRA during this 2-year period is not eligible to be rolled over into an IRA that is not a SIMPLE IRA and thus cannot be a qualified rollover contribution. This 2-year period of section 408(d)(3)(G) applies separately to the contributions of each of an individual's employers maintaining a SIMPLE IRA Plan.

(c) Once an amount in a SEP IRA or SIMPLE IRA has been converted to a Roth IRA, it is treated as a contribution to a Roth IRA for all purposes. Future contributions under the SEP or under the SIMPLE IRA Plan may not be made to the Roth IRA.

Q–5. Can amounts in other kinds of retirement plans be converted to a Roth IRA?

A–5. No. Only amounts in another IRA can be converted to a Roth IRA. For example, amounts in a qualified plan or annuity plan described in section 401(a) or 403(a) cannot be converted directly to a Roth IRA. Also, amounts held in an annuity contract or account described in section 403(b) cannot be converted directly to a Roth IRA.

Q–6. Can an individual who has attained at least age 70½ by the end of a calendar year convert an amount distributed from a traditional IRA during that year to a Roth IRA before receiving his or her required minimum distribution with respect to the traditional IRA for the year of the conversion?

A–6. (a) No. In order to be eligible for a conversion, an amount first must be eligible to be rolled over. Section 408(d)(3) prohibits the rollover of a required minimum distribution. If a minimum distribution is required for a year with respect to an IRA, the first dollars distributed during that year are treated as consisting of the required minimum distribution until an amount equal to the required minimum distribution for that year has been distributed.

(b) As provided in A–1(c) of this section, any amount converted is treated as a distribution from a traditional IRA and a rollover contribution to a Roth IRA and not as a trustee-to-trustee transfer for purposes of section 408 and section 408A. Thus, in a year for which a minimum distribution is required (including the calendar year in which the individual attains age 70½), an individual may not convert the assets of an IRA (or any portion of those assets) to a Roth IRA to the extent that the required minimum distribution for the traditional IRA for the year has not been distributed.

(c) If a required minimum distribution is contributed to a Roth IRA, it is treated as having been distributed, subject to the normal rules under section 408(d)(1) and (2), and then contributed as a regular contribution to a Roth IRA. The amount of the required minimum distribution is not a conversion contribution.

Q–7. What are the tax consequences when an amount is converted to a Roth IRA?

A–7. (a) Any amount that is converted to a Roth IRA is includible in gross income as a distribution according to the rules of section 408(d)(1) and (2) for the taxable year in which the amount is distributed or transferred from the traditional IRA. Thus, any portion of the distribution or transfer that is treated as a return of basis under section 408(d)(1) and (2) is not includible in gross income as a result of the conversion.

(b) The 10-percent additional tax under section 72(t) generally does not apply to the taxable conversion amount. But see § 1.408A–6 A–5 for circumstances under which the taxable conversion amount would be subject to the additional tax under section 72(t).

(c) Pursuant to section 408A(e), a conversion is not treated as a rollover for purposes of the one-rollover-per-year rule of section 408(d)(3)(B).

Q–8. Is there an exception to the income-inclusion rule described in A–7 of this section for 1998 conversions?

A–8. Yes. In the case of a distribution (including a trustee-to-trustee transfer) from a traditional IRA on or before December 31, 1998, that is converted to a Roth IRA, instead of having the entire taxable conversion amount includible in income in 1998, an individual includes in gross income for 1998 only one quarter of that amount and one quarter of that amount for each of the next 3 years. This 4-year spread also applies if the conversion amount was distributed in 1998 and contributed to the Roth IRA within 60 days, but after December 31, 1998. However, see § 1.408A–6 A–6 for special rules requiring acceleration of inclusion if an amount subject to the 4-year spread is distributed from the Roth IRA before 2001.

Q–9. Is the taxable conversion amount included in income for all purposes?

A–9. Except as provided below, any taxable conversion amount includible in gross income for a year as a result of the conversion (regardless of whether the individual is using a 4-year spread) is included in income for all purposes. Thus, for example, it is counted for purposes of determining the taxable portion of social security payments under section 86 and for purposes of determining the phase-out of the $25,000 exemption under section 469(i) relating to the disallowance of passive activity losses from rental real estate activities. However, as provided in § 1.408A–3 A–5, the taxable conversion amount (and any resulting change in other elements of adjusted gross income) is disregarded for purposes of determining modified AGI for section 408A.

Q–10. Can an individual who makes a 1998 conversion elect not to have the 4-year spread apply and instead have the full taxable conversion amount includible in gross income for 1998?

A–10. Yes. Instead of having the taxable conversion amount for a 1998 conversion included over 4 years as provided under A–8 of this section, an individual can elect to include the full taxable conversion amount in income for 1998. The election is made on Form 8606 and cannot be made or changed after the due date (including extensions) for filing the 1998 Federal income tax return.

Q–11. What happens when an individual who is using the 4-year spread dies before the full taxable conversion amount has been included in gross income?

A–11. (a) If an individual who is using the 4-year spread described in A–8 of this section dies before the full taxable conversion amount has been included in gross income, then the remainder must be included in the individual's gross income for the taxable year that includes the date of death.

(b) However, if the sole beneficiary of all the decedent's Roth IRAs is the decedent's spouse, then the spouse can elect to continue the 4-year spread. Thus, the spouse can elect to include in gross income the same amount that the decedent would have included in each of the remaining years of the 4-year period. Where the spouse makes such an election, the amount includible under the 4-year spread for the taxable year that includes the date of the decedent's death remains includible in the decedent's gross income and is reported on the decedent's final Federal income tax return. The election is made on either Form 8606 or Form 1040, in accordance with the instructions to the applicable form, for the taxable year that includes the decedent's date of death and cannot be changed after the due date (including extensions) for filing the Federal income tax return for the spouse's taxable year that includes the decedent's date of death.

Q–12. Can an individual convert a traditional IRA to a Roth IRA if he or she is receiving substantially equal periodic payments within the meaning of section 72(t)(2)(A)(iv) from that traditional IRA?

A. Yes. Not only is the conversion amount itself not subject to the early distribution tax under section 72(t), but the conversion amount is also not treated as a distribution for purposes of determining whether a modification within the meaning of section 72(t)(4)(A) has occurred. However, if the original series of substantially equal periodic payments does not continue to be distributed in substantially equal periodic payments from the Roth IRA after the conversion, the series of payments will have been modified and, if this modification occurs within 5 years of the first payment or prior to the individual becoming disabled or attaining age 59½, the taxpayer will be subject to the recapture tax of section 72(t)(4)(A).

Q–13. Can a 1997 distribution from a traditional IRA be converted to a Roth IRA in 1998?

A–13. No. An amount distributed from a traditional IRA in 1997 that is contributed to a Roth IRA in 1998 would not be a conversion contribution. See A–3 of this section regarding the remedy for a failed conversion.

§ 1.408A–5 Recharacterized contributions.

Q–1. Can an IRA owner recharacterize certain contributions (i.e., treat a contribution made to one type of IRA as made to a different type of IRA) for a taxable year?

A–1. (a) Yes. In accordance with section 408A(d)(6), except as otherwise

provided in this section, if an individual makes a contribution to an IRA (the FIRST IRA) for a taxable year and then transfers the contribution (or a portion of the contribution) in a trustee-to-trustee transfer from the trustee of the FIRST IRA to the trustee of another IRA (the SECOND IRA), the individual can elect to treat the contribution as having been made to the SECOND IRA, instead of to the FIRST IRA, for Federal tax purposes. A transfer between the FIRST IRA and the SECOND IRA will not fail to be a trustee-to-trustee transfer merely because both IRAs are maintained by the same trustee.

(b) This recharacterization election can be made only if the trustee-to-trustee transfer from the FIRST IRA to the SECOND IRA is made on or before the due date (including extensions) for filing the individual's Federal income tax return for the taxable year for which the contribution was made to the FIRST IRA. For purposes of this section, a conversion that is accomplished through a rollover of a distribution from a traditional IRA in a taxable year that, within 60 days after the distribution, is contributed to a Roth IRA in the next taxable year is treated as a contribution for the earlier taxable year.

Q–2. What is the proper treatment of the net income attributable to the contribution that is being recharacterized?

A–2. (a) The net income attributable to the contribution that is being recharacterized must be transferred to the SECOND IRA along with the contribution.

(b) If the amount of the contribution being recharacterized was contributed to a separate IRA and no distributions or additional contributions have been made from or to that IRA at any time, then the contribution is recharacterized by the trustee of the FIRST IRA transferring the entire account balance of the FIRST IRA to the trustee of the SECOND IRA. In this case, the net income (or loss) attributable to the contribution being recharacterized is the difference between the amount of the original contribution and the amount transferred.

(c) If paragraph (b) of this A–2 does not apply, then the net income attributable to the contribution is calculated in the manner prescribed by § 1.408–4(c)(2)(ii).

Q–3. What is the effect of recharacterizing a contribution made to the FIRST IRA as a contribution made to the SECOND IRA?

A–3. The contribution that is being recharacterized as a contribution to the SECOND IRA is treated as having been originally contributed to the SECOND IRA on the same date and (in the case of a regular contribution) for the same taxable year that the contribution was made to the FIRST IRA. Thus, for example, no deduction would be allowed for a contribution to the FIRST IRA, and any net income transferred with the recharacterized contribution is treated as earned in the SECOND IRA, and not the FIRST IRA.

Q–4. Can an amount contributed to an IRA in a tax-free transfer be recharacterized under A–1 of this section?

A–4. No. If an amount is contributed to the FIRST IRA in a tax-free transfer, the amount cannot be recharacterized as a contribution to the SECOND IRA under A–1 of this section. However, if an amount is erroneously rolled over or transferred from a traditional IRA to a SIMPLE IRA, the contribution can subsequently be recharacterized as a contribution to another traditional IRA.

Q–5. Can an amount contributed by an employer under a SIMPLE IRA Plan or a SEP be recharacterized under A–1 of this section?

A–5. No. Employer contributions (including elective deferrals) under a SIMPLE IRA Plan or a SEP cannot be recharacterized as contributions to another IRA under A–1 of this section.

Q–6. How does a taxpayer make the election to recharacterize a contribution to an IRA for a taxable year?

A–6. (a) An individual makes the election described in this section by notifying, on or before the date of the transfer, both the trustee of the FIRST IRA and the trustee of the SECOND IRA, that the individual has elected to treat the contribution as having been made to the SECOND IRA, instead of the FIRST IRA, for Federal tax purposes. The notification of the election must include the following information: the type and amount of the contribution to the FIRST IRA that is to be recharacterized; the date on which the contribution was made to the FIRST IRA and the year for which it was made; a direction to the trustee of the FIRST IRA to transfer, in a trustee-to-trustee transfer, the amount of the contribution and net income allocable to the contribution to the trustee of the SECOND IRA; and the name of the trustee of the FIRST IRA and the trustee of the SECOND IRA and any additional information needed to make the transfer.

(b) The election and the trustee-to-trustee transfer must occur on or before the due date (including extensions) for filing the individual's Federal income tax return for the taxable year for which the recharacterized contribution was made to the FIRST IRA, and the election cannot be revoked after the transfer. An individual who makes this election must report the recharacterization, and must treat the contribution as having been made to the SECOND IRA, instead of the FIRST IRA, on the individual's Federal income tax return for the taxable year described in the preceding sentence in accordance with the applicable Federal tax forms and instructions.

Q–7. If an amount is initially contributed to an IRA for a taxable year, then is moved (with net income attributable to the contribution) in a tax-free transfer to another IRA (the FIRST IRA for purposes of A–1 of this section), can the tax-free transfer be disregarded, so that the initial contribution that is transferred from the FIRST IRA to the SECOND IRA is treated as a recharacterization of that initial contribution?

A–7. Yes. In applying section 408A(d)(6), tax-free transfers between IRAs are disregarded. Thus, if a contribution to an IRA for a year is followed by one or more tax-free transfers between IRAs prior to the recharacterization, then for purposes of section 408A(d)(6), the contribution is treated as if it remained in the initial IRA. Consequently, an individual may elect to recharacterize an initial contribution made to the initial IRA that was involved in a series of tax-free transfers by making a trustee-to-trustee transfer from the last IRA in the series to the SECOND IRA. In this case the contribution to the SECOND IRA is treated as made on the same date (and for the same taxable year) as the date the contribution being recharacterized was made to the initial IRA.

Q–8. If a contribution is recharacterized, is the recharacterization treated as a rollover for purposes of the one-rollover-per-year limitation of section 408(d)(3)(B)?

A–8. No, recharacterizing a contribution under A–1 of this section is never treated as a rollover for purpose of the one-rollover-per-year limitation of section 408(d)(3)(B), even if the contribution would have been treated as a rollover contribution by the SECOND IRA if it had been made directly to the SECOND IRA, rather than as a result of a recharacterization of a contribution to the FIRST IRA.

Q–9. Are there examples to illustrate the rules in this section?

A–9. The rules in this section are illustrated by the following examples:

Example 1. In 1998, Individual C converts the entire amount in his traditional IRA to a Roth IRA. Individual C thereafter determines that his modified AGI for 1998 exceeded $100,000 so that he was ineligible to have made a conversion in that year. Accordingly,

prior to the due date (plus extensions) for filing the individual's Federal income tax return for 1998, he decides to recharacterize the conversion contribution. He instructs the trustee of the Roth IRA (FIRST IRA) to transfer in a trustee-to-trustee transfer the amount of the contribution, plus net income, to the trustee of a new traditional IRA (SECOND IRA). The individual notifies the trustee of the FIRST IRA and the trustee of the SECOND IRA that he is recharacterizing his IRA contribution (and provides the other information described in A–6 of this section). On the individual's Federal income tax return for 1998, he treats the original amount of the conversion as having been contributed to the SECOND IRA and not the Roth IRA. As a result, for Federal tax purposes, the contribution is treated as having been made to the SECOND IRA and not to the Roth IRA. The result would be the same if the conversion amount had been transferred in a tax-free transfer to another Roth IRA prior to the recharacterization.

Example 2. In 1998, an individual makes a $2,000 regular contribution for 1998 to his traditional IRA (FIRST IRA). Prior to the due date (plus extensions) for filing the individual's Federal income tax return for 1998, he decides that he would prefer to contribute to a Roth IRA instead. The individual instructs the trustee of the FIRST IRA to transfer in a trustee-to-trustee transfer the amount of the contribution, plus attributable net income, to the trustee of a Roth IRA (SECOND IRA). The individual notifies the trustee of the FIRST IRA and the trustee of the SECOND IRA that he is recharacterizing his $2,000 contribution for 1998 (and provides the other information described in A–6 of this section). On the individual's Federal income tax return for 1998, he treats the $2,000 as having been contributed to the Roth IRA for 1998 and not to the traditional IRA. As a result, for Federal tax purposes, the contribution is treated as having been made to the Roth IRA for 1998 and not to the traditional IRA. The result would be the same if the conversion amount had been transferred in a tax-free transfer to another traditional IRA prior to the recharacterization.

Example 3. The facts are the same as in *Example 2,* except that the $2,000 regular contribution is initially made to a Roth IRA and the recharacterizing transfer is made to a traditional IRA. On the individual's Federal income tax return for 1998, he treats the $2,000 as having been contributed to the traditional IRA for 1998 and not the Roth IRA. As a result, for Federal tax purposes, the contribution is treated as having been made to the traditional IRA for 1998 and not the Roth IRA. The result would be the same if the contribution had been transferred in a tax-free transfer to another Roth IRA prior to the recharacterization, except that the only Roth IRA trustee the individual must notify is the one actually making the recharacterization transfer.

Example 4. In 1998, an individual receives a distribution from traditional IRA 1 and contributes the entire amount to traditional IRA 2 in a rollover contribution described in section 408(d)(3). In this case, the individual cannot elect to recharacterize the contribution by transferring the contribution amount, plus net income, to a Roth IRA, because an amount contributed to an IRA in a tax-free transfer cannot be recharacterized. However, the individual may convert (other than by recharacterization) the amount in traditional IRA 2 to a Roth IRA at any time, provided the requirements of § 1.408A–4 A–1 are satisfied.

§ 1.408A–6 Distributions.

Q–1. How are distributions from Roth IRAs taxed?

A–1. (a) The taxability of a distribution from a Roth IRA generally depends on whether or not the distribution is a qualified distribution. This A–1 provides rules for qualified distributions and certain other nontaxable distributions. A–4 of this section provides rules for the taxability of distributions that are not qualified distributions.

(b) A distribution from a Roth IRA is not includible in the owner's gross income if it is a qualified distribution or to the extent that it is a return of the owner's contributions to the Roth IRA (determined in accordance with A–8 of this section). A qualified distribution is one that is both—

(1) Made after a 5-taxable-year period (defined in A–2 of this section); and

(2) Made on or after the date on which the owner attains age 59½, made to a beneficiary or the estate of the owner on or after the date of the owner's death, attributable to the owner's being disabled within the meaning of section 72(m)(7), or to which section 72(t)(2)(F) applies (exception for first-time home purchase).

(c) An amount distributed from a Roth IRA will not be included in gross income to the extent it is rolled over to another Roth IRA on a tax-free basis under the rules of sections 408(d)(3) and 408A(e).

(d) Excess contributions that are returned to the Roth IRA owner in accordance with section 408(d)(4) (corrective distributions) are not includible in gross income, but any net income required to be distributed under section 408(d)(4) together with the excess contribution is includible in gross income for the taxable year in which the excess contribution was made.

Q–2. When does the 5-taxable-year period described in A–1 of this section (relating to qualified distributions) begin and end?

A–2. The 5-taxable-year period described in A–1 of this section begins on the first day of the individual's taxable year for which the first regular contribution is made to any Roth IRA of the individual or, if earlier, the first day of the individual's taxable year in which the first conversion contribution is made to any Roth IRA of the individual. The 5-taxable-year period ends on the last day of the individual's fifth consecutive taxable year beginning with the taxable year described in the preceding sentence. For example, if an individual whose taxable year is the calendar year makes a first-time regular Roth IRA contribution any time between January 1, 1998, and April 15, 1999, for 1998, the 5-taxable-year period begins on January 1, 1998. Thus, each Roth IRA owner has only one 5-taxable-year period described in A–1 of this section for all the Roth IRAs of which he or she is the owner. Further, because of the requirement of the 5-taxable-year period, no qualified distributions can occur before taxable years beginning in 2003.

Q–3. If a distribution is made to an individual who is the sole beneficiary of his or her deceased spouse's Roth IRA and the individual is treating the Roth IRA as his or her own, can the distribution be a qualified distribution based on being made to a beneficiary on or after the owner's death?

A–3. No. If a distribution is made to an individual who is the sole beneficiary of his or her deceased spouse's Roth IRA and the individual is treating the Roth IRA as his or her own, then, in accordance with § 1.408A–2 A–4, the distribution is treated as coming from the individual's own Roth IRA and not the deceased spouse's Roth IRA. Therefore, for purposes of determining whether the distribution is a qualified distribution, it is not treated as made to a beneficiary on or after the owner's death.

Q–4. How is a distribution from a Roth IRA taxed if it is not a qualified distribution?

A–4. A distribution that is not a qualified distribution, and is neither contributed to another Roth IRA in a qualified rollover contribution nor constitutes a corrective distribution, is includible in the owner's gross income to the extent that the amount of the distribution, when added to the amount of all previous distributions from the owner's Roth IRAs (whether or not they were qualified distributions), exceeds the owner's contributions to all his or her Roth IRAs. For purposes of this A–4, any amount distributed as a corrective distribution is treated as if it was never contributed.

Q–5. Will the additional tax under 72(t) apply to the amount of a distribution that is not a qualified distribution?

A–5. (a) The 10-percent additional tax under section 72(t) will apply (unless the distribution is excepted under

section 72(t)) to any distribution from a Roth IRA includible in gross income.

(b) The 10-percent additional tax under section 72(t) also applies to a nonqualified distribution, even if it is not then includible in gross income, to the extent it is allocable to a conversion contribution, if the distribution is made within the 5-taxable-year period beginning with the first day of the individual's taxable year in which the conversion contribution was made. The 5-taxable-year period ends on the last day of the individual's fifth consecutive taxable year beginning with the taxable year described in the preceding sentence. For purposes of applying the tax, only the amount of the conversion includible in gross income as a result of the conversion is taken into account. The exceptions under section 72(t) also apply to such a distribution.

(c) The 5-taxable-year period described in this A–5 for purposes of determining whether section 72(t) applies to a distribution allocable to a conversion contribution is separately determined for each conversion contribution, and need not be the same as the 5-taxable-year period used for purposes of determining whether a distribution is a qualified distribution under A–1(b) of this section. For example, if a calendar-year taxpayer who received a distribution from a traditional IRA on December 31, 1998, makes a conversion contribution by contributing the distributed amount to a Roth IRA on February 25, 1999 in a qualifying rollover contribution and makes a regular contribution for 1998 on the same date, the 5-taxable-year period for purposes of this A–5 begins on January 1, 1999, while the 5-taxable-year period for purposes of A–1(b) of this section begins on January 1, 1998.

Q–6. Is there a special rule for taxing distributions allocable to a 1998 conversion?

A–6. Yes. In the case of a distribution from a Roth IRA in 1998, 1999 or 2000 of amounts allocable to a 1998 conversion with respect to which the 4-year spread for the resultant income inclusion applies (see § 1.408A–4 A–8), any income deferred as a result of the election to years after the year of the distribution is accelerated so that it is includible in gross income in the year of the distribution up to the amount of the distribution allocable to the 1998 conversion (determined under A–8 of this section). This amount is in addition to the amount otherwise includible in the owner's gross income for that taxable year as a result of the conversion. However, this rule will not require the inclusion of any amount to the extent it exceeds the total amount of income required to be included over the 4-year period. The acceleration of income inclusion described in this A–6 applies in the case of a surviving spouse who elects to continue the 4-year spread in accordance with § 1.408A–4 A–11(b).

Q–7. Is the 5-taxable-year period described in A–1 of this section redetermined when a Roth IRA owner dies?

A–7. (a) No. The beginning of the 5-taxable-year period described in A–1 of this section is not redetermined when the Roth IRA owner dies. Thus, in determining the 5-taxable-year period, the period the Roth IRA is held in the name of a beneficiary, or in the name of a surviving spouse who treats the decedent's Roth IRA as his or her own, includes the period it was held by the decedent.

(b) The 5-taxable-year period for a Roth IRA held by an individual as a beneficiary of a deceased Roth IRA owner is determined independently of the 5-taxable-year period for the beneficiary's own Roth IRA. However, if a surviving spouse treats the Roth IRA as his or her own, the 5-taxable-year period with respect to any of the surviving spouse's Roth IRAs (including the one that the surviving spouse treats as his or her own) ends at the earlier of the end of either the 5-taxable-year period for the decedent or the 5-taxable-year period applicable to the spouse's own Roth IRAs.

Q–8. How is it determined whether an amount distributed from a Roth IRA is allocated to regular contributions, conversion contributions, or earnings?

A–8. (a) Any amount distributed from an individual's Roth IRA is treated as made in the following order (determined as of the end of a taxable year and exhausting each category before moving to the following category)—

(1) From regular contributions;

(2) From conversion contributions, on a first-in-first-out basis; and

(3) from earnings.

(b) To the extent a distribution is treated as made from a particular conversion contribution, it is treated as made first from the portion, if any, that was includible in gross income as a result of the conversion.

Q–9. Are there special rules for determining the source of distributions under A–8 of this section?

A–9. Yes. For purposes of determining the source of distributions, the following rules apply:

(a) All distributions from all an individual's Roth IRAs made during a taxable year are aggregated.

(b) All regular contributions made for the same taxable year to all the individual's Roth IRAs are aggregated and added to the undistributed total regular contributions for prior taxable years. Regular contributions for a year include contributions made in the following taxable year that are identified as made for the taxable year. For example, a regular contribution made in 1999 for 1998 is aggregated with the contributions made in 1998 for 1998.

(c) All conversion contributions received during the same taxable year by all the individual's Roth IRAs are aggregated. Notwithstanding the preceding sentence, all conversion contributions made by an individual during 1999 that were distributed from a traditional IRA in 1998 and with respect to which the 4-year spread applies are treated for purposes of A–8(b) of this section as contributed to the individual's Roth IRAs prior to any other conversion contributions made by the individual during 1999.

(d) A distribution from an individual's Roth IRA that is rolled over to another Roth IRA of the individual is disregarded for purposes of determining the amount of both contributions and distributions.

(e) Any amount distributed as a corrective distribution (including net income), as described in A–1(d) of this section, is disregarded in determining the amount of contributions, earnings, and distributions.

(f) If an individual recharacterizes a contribution made to a traditional IRA (FIRST IRA) by transferring the contribution to a Roth IRA (SECOND IRA) in accordance with § 1.408A–5, then, pursuant to § 1.408A–5 A–3, the contribution to the Roth IRA is taken into account for the same taxable year for which it would have been taken into account if the contribution had originally been made to the Roth IRA and had never been contributed to the traditional IRA. Thus, the contribution to the Roth IRA is treated as contributed to the Roth IRA on the same date and for the same taxable year that the contribution was made to the traditional IRA.

(g) If an individual recharacterizes a regular or conversion contribution made to a Roth IRA (FIRST IRA) by transferring the contribution to a traditional IRA (SECOND IRA) in accordance with § 1.408A–5, then pursuant to § 1.408A–5 A–3, the contribution to the Roth IRA and the recharacterizing transfer are disregarded in determining the amount of both contributions and distributions for the taxable year with respect to which the original contribution was made to the Roth IRA.

(h) Pursuant to § 1.408A–5 A–3, the effect of income or loss (determined in accordance with § 1.408A–5 A–2) occurring after the contribution to the FIRST IRA is disregarded in determining the amounts described in paragraphs (f) and (g) of this A–9. Thus, for purposes of paragraphs (f) and (g) of this A–9, the amount of the contribution is determined based on the original contribution.

Q–10. Are there examples to illustrate the ordering rules described in A–8 and A–9 of this section?

A–10. Yes. The following examples illustrate the ordering rules in A–8 and A–9 of this section:

Example 1. In 1998, individual B converts $80,000 in his traditional IRA to a Roth IRA. B has a basis of $20,000 in the conversion amount and so must include the remaining $60,000 in gross income. He decides to spread the $60,000 income by including $15,000 in each of the 4 years 1998–2001, under the rules of § 1.408A–4 A–8. B also makes a regular contribution of $2,000 in 1998. If a distribution of $2,000 is made to B anytime in 1998, it will be treated as made entirely from the regular contributions, so there will be no Federal income tax consequences as a result of the distribution.

Example 2. The facts are the same as in *Example 1,* except that the distribution made in 1998 is $5,000. The distribution is treated as made from $2,000 of regular contributions and $3,000 of conversion contributions that were includible in gross income. As a result, B must include $18,000 in gross income for 1998: $3,000 as a result of the acceleration of amounts that otherwise would have been included in later years under the 4-year-spread rule and $15,000 includible under the regular 4-year-spread rule. In addition, because the $3,000 is allocable to a conversion made within the previous 5 taxable years, the 10-percent additional tax under section 72(t) would apply to this $3,000 distribution as if it were includible in gross income for 1998, unless an exception applies. Under the 4-year-spread rule, B would now include in gross income $15,000 for 1999 and 2000, but only $12,000 for 2001, because of the accelerated inclusion of the $3,000 distribution.

Example 3. The facts are the same as in *Example 1,* except that B makes an additional $2,000 regular contribution in 1999 and he does not take a distribution in 1998. In 1999, the entire balance in the account, $90,000 ($84,000 of contributions and $6,000 of earnings), is distributed to B. The distribution is treated as made from $4,000 of regular contributions, $60,000 of conversion contributions that were includible in gross income, $20,000 of conversion contributions that were not includible in gross income, and $6,000 of earnings. Because a distribution has been made within the 4-year-spread period, B must accelerate the income inclusion under the 4-year-spread rule and must include in gross income the $45,000 remaining under the 4-year-spread rule in addition to the $6,000 of earnings. Because $60,000 of the distribution is allocable to a conversion made within the previous 5 taxable years, it is subject to the 10-percent additional tax under section 72(t) as if it were includible in gross income for 1999, unless an exception applies. The $6,000 allocable to earnings would be subject to the tax under section 72(t), unless an exception applies. Under the 4-year-spread rule, no amount would be includible in gross income for 2000 or 2001 because the entire amount of the conversion that was includible in gross income has already been included.

Example 4. The facts are the same as in *Example 1,* except that B also makes a $2,000 regular contribution in each year 1999 through 2002 and he does not take a distribution in 1998. A distribution of $85,000 is made to B in 2002. The distribution is treated as made from the $10,000 of regular contributions (the total regular contributions made in the years 1998–2002), $60,000 of conversion contributions that were includible in gross income, and $15,000 of conversion contributions that were not includible in gross income. As a result, no amount of the distribution is includible in gross income; however, because the distribution is allocable to a conversion made within the previous 5 years, the $60,000 is subject to the 10-percent additional tax under section 72(t) as if it were includible in gross income for 2002, unless an exception applies.

Example 5. The facts are the same as in *Example 4,* except no distribution occurs in 2002. In 2003, the entire balance in the account, $170,000 ($90,000 of contributions and $80,000 of earnings), is distributed to B. The distribution is treated as made from $10,000 of regular contributions, $60,000 of conversion contributions that were includible in gross income, $20,000 of conversion contributions that were not includible in gross income, and $80,000 of earnings. As a result, for 2003, B must include in gross income the $80,000 allocable to earnings, unless the distribution is a qualified distribution; and if it is not a qualified distribution, the $80,000 would be subject to the 10-percent additional tax under section 72(t), unless an exception applies.

Example 6. Individual C converts $20,000 to a Roth IRA in 1998 and $15,000 (in which amount C had a basis of $2,000) to another Roth IRA in 1999. No other contributions are made. In 2003, a $30,000 distribution, that is not a qualified distribution, is made to C. The distribution is treated as made from $20,000 of the 1998 conversion contribution and $10,000 of the 1999 conversion contribution that was includible in gross income. As a result, for 2003, no amount is includible in gross income; however, because $10,000 is allocable to a conversion contribution made within the previous 5 taxable years, that amount is subject to the 10-percent additional tax under section 72(t) as if the amount were includible in gross income for 2003, unless an exception applies. The result would be the same whichever of C's Roth IRAs made the distribution.

Example 7. The facts are the same as in *Example 6,* except that the distribution is a qualified distribution. The result is the same as in Example 6, except that no amount would be subject to the 10-percent additional tax under section 72(t), because, to be a qualified distribution, the distribution must be made on or after the date on which the owner attains age 59½, made to a beneficiary or the estate of the owner on or after the date of the owner's death, attributable to the owner's being disabled within the meaning of section 72(m)(7), or to which section 72(t)(2)(F) applies (exception for a first-time home purchase). Under section 72(t)(2), each of these conditions is also an exception to the tax under section 72(t).

Example 8. Individual D makes a $2,000 regular contribution to a traditional IRA on January 1, 1999, for 1998. On April 15, 1999, when the $2,000 has increased to $2,500, D recharacterizes the contribution by transferring the $2,500 to a Roth IRA (pursuant to § 1.408A–5 A–1). In this case, D's regular contribution to the Roth IRA for 1998 is $2,000. The $500 of earnings is not treated as a contribution to the Roth IRA. The results would be the same if the $2,000 had decreased to $1,500 prior to the recharacterization.

Example 9. In December 1998, individual E receives a distribution from his traditional IRA of $300,000 and in January 1999 he contributes the $300,000 to a Roth IRA as a conversion contribution. In April 1999, when the $300,000 has increased to $350,000, E recharacterizes the conversion contribution by transferring the $350,000 to a traditional IRA. In this case, E's conversion contribution for 1998 is $0, because the $300,000 conversion contribution and the earnings of $50,000 are disregarded. The results would be the same if the $300,000 had decreased to $250,000 prior to the recharacterization. Further, since the conversion is disregarded, the $300,000 is not includible in gross income in 1998.

Q–11. If the owner of a Roth IRA dies prior to the end of the 5-taxable-year period described in A–1 of this section (relating to qualified distributions) or prior to the end of the 5-taxable-year period described in A–5 of this section (relating to conversions), how are different types of contributions in the Roth IRA allocated to multiple beneficiaries?

A–11. Each type of contribution is allocated to each beneficiary on a pro-rata basis. Thus, for example, if a Roth IRA owner dies in 1999, when the Roth IRA contains a regular contribution of $2,000, a conversion contribution of $6,000 and earnings of $1,000, and the owner leaves his Roth IRA equally to four children, each child will receive one quarter of each type of contribution. Pursuant to the ordering rules in A–8 of this section, an immediate distribution of $2,000 to one of the children will be deemed to consist of $500 of regular contributions and $1,500 of conversion contributions.

Q–12. How do the withholding rules under section 3405 apply to Roth IRAs?

A–12. Distributions from a Roth IRA are distributions from an individual

retirement plan for purposes of section 3405 and thus are designated distributions unless one of the exceptions in section 3405(e)(1) applies. Pursuant to section 3405 (a) and (b), nonperiodic distributions from a Roth IRA are subject to 10-percent withholding by the payor and periodic payments are subject to withholding as if the payments were wages. However, an individual can elect to have no amount withheld in accordance with section 3405(a)(2) and (b)(2).

Q–13. Do the withholding rules under section 3405 apply to conversions?

A–13. Yes. A conversion by any method described in § 1.408A–4 A–1 is considered a designated distribution subject to section 3405. However, a conversion occurring in 1998 by means of a trustee-to-trustee transfer of an amount from a traditional IRA to a Roth IRA established with the same or a different trustee is not required to be treated as a designated distribution for purposes of section 3405. Consequently, no withholding is required with respect to such a conversion (without regard to whether or not the individual elected to have no withholding).

Q–14. What minimum distribution rules apply to a Roth IRA?

A–14. (a) No minimum distributions are required to be made from a Roth IRA under section 408(a)(6) and (b)(3) (which generally incorporate the provisions of section 401(a)(9)) while the owner is alive. The post-death minimum distribution rules under section 401(a)(9)(B) that apply to traditional IRAs, with the exception of the at-least-as-rapidly rule described in section 401(a)(9)(B)(i), also apply to Roth IRAs.

(b) The minimum distribution rules apply to the Roth IRA as though the Roth IRA owner died before his or her required beginning date. Thus, generally, the entire interest in the Roth IRA must be distributed by the end of the fifth calendar year after the year of the owner's death unless the interest is payable to a designated beneficiary over a period not greater than that beneficiary's life expectancy and distribution commences before the end of the calendar year following the year of death. If the sole beneficiary is the decedent's spouse, such spouse may delay distributions until the decedent would have attained age 70½ or may treat the Roth IRA as his or her own.

(c) Distributions to a beneficiary that are not qualified distributions will be includible in the beneficiary's gross income according to the rules in A–4 of this section.

Q–15. Does section 401(a)(9) apply separately to Roth IRAs and individual retirement plans that are not Roth IRAs?

A–15. Yes. An individual required to receive minimum distributions from his or her own traditional or SIMPLE IRA cannot choose to take the amount of the minimum distributions from any Roth IRA. Similarly, an individual required to receive minimum distributions from a Roth IRA cannot choose to take the amount of the minimum distributions from a traditional or SIMPLE IRA. In addition, an individual required to receive minimum distributions as a beneficiary under a Roth IRA can only satisfy the minimum distributions for one Roth IRA by distributing from another Roth IRA if the Roth IRAs were inherited from the same decedent.

Q–16. How is the basis of property distributed from a Roth IRA determined for purposes of a subsequent disposition?

A–16. The basis of property distributed from a Roth IRA is its fair market value (FMV) on the date of distribution, whether or not the distribution is a qualified distribution. Thus, for example, if a distribution consists of a share of stock in XYZ Corp. with an FMV of $40.00 on the date of distribution, for purposes of determining gain or loss on the subsequent sale of the share of XYZ Corp. stock, it has a basis of $40.00.

Q–17. What is the effect of distributing an amount from a Roth IRA and contributing it to another type of retirement plan other than a Roth IRA?

A–17. Any amount distributed from a Roth IRA and contributed to another type of retirement plan (other than a Roth IRA) is treated as a distribution from the Roth IRA that is neither a rollover contribution for purposes of section 408(d)(3) nor a qualified rollover contribution within the meaning of section 408A(e) to the other type of retirement plan. This treatment also applies to any amount transferred from a Roth IRA to any other type of retirement plan unless the transfer is a recharacterization described in § 1.408A–5.

Q–18. Can an amount be transferred directly from an education IRA to a Roth IRA (or distributed from an education IRA and rolled over to a Roth IRA)?

A–18. No amount may be transferred directly from an education IRA to a Roth IRA. A transfer of funds (or distribution and rollover) from an education IRA to a Roth IRA constitutes a distribution from the education IRA and a regular contribution to the Roth IRA (rather than a qualified rollover contribution to the Roth IRA).

Q–19. What are the Federal income tax consequences of a Roth IRA owner transferring his or her Roth IRA to another individual by gift?

A–19. A Roth IRA owner's transfer of his or her Roth IRA to another individual by gift constitutes an assignment of the owner's rights under the Roth IRA. At the time of the gift, the assets of the Roth IRA are deemed to be distributed to the owner and, accordingly, are treated as no longer held in a Roth IRA. In the case of any such gift of a Roth IRA made prior to October 1, 1998, if the entire interest in the Roth IRA is reconveyed to the Roth IRA owner prior to January 1, 1999, the Internal Revenue Service will treat the gift and reconveyance as never having occurred for estate tax, gift tax, and generation-skipping tax purposes and for purposes of this A–19.

§ 1.408A–7 Reporting.

Q–1. What reporting requirements apply to Roth IRAs?

A–1. Generally, the reporting requirements applicable to IRAs other than Roth IRAs also apply to Roth IRAs, except that, pursuant to section 408A(d)(3)(D), the trustee of a Roth IRA must include on Forms 1099–R and 5498 additional information as described in the instructions thereto. Any conversion of amounts from an IRA other than a Roth IRA to a Roth IRA is treated as a distribution for which a Form 1099–R must be filed by the trustee maintaining the non-Roth IRA. In addition, the owner of such IRAs must report the conversion by completing Form 8606. In the case of a recharacterization described in § 1.408A–5 A–1, IRA owners must report such transactions in the manner prescribed in the instructions to the applicable Federal tax forms.

Q–2. Can a trustee rely on reasonable representations of a Roth IRA contributor or distributee for purposes of fulfilling reporting obligations?

A–2. A trustee maintaining a Roth IRA is permitted to rely on reasonable representations of a Roth IRA contributor or distributee for purposes of fulfilling reporting obligations.

§ 1.408A–8 Definitions.

Q–1. Are there any special definitions that govern in applying the provisions of §§ 1.408A–1 through 1.408A–7 and this section?

A–1. Yes, the following definitions govern in applying the provisions of §§ 1.408A–1 through 1.408A–7 and this section. Unless the context indicates otherwise, the use of a particular term excludes the use of the other terms. The definitions are as follows:

(a) *Different types of IRAs*—(1) *IRA*. Sections 408(a) and (b), respectively, describe an individual retirement account and an individual retirement annuity. The term IRA means an IRA described in either section 408(a) or (b), including each IRA described in paragraphs (a)(2) through (5) of this A–1. However, the term IRA does not include an education IRA described in section 530.

(2) *Traditional IRA*. The term traditional IRA means an individual retirement account or individual retirement annuity described in section 408(a) or (b), respectively. This term includes a SEP IRA but does not include a SIMPLE IRA or a Roth IRA.

(3) *SEP IRA*. Section 408(k) describes a simplified employee pension (SEP) as an employer-sponsored plan under which an employer can make contributions to IRAs established for its employees. The term SEP IRA means an IRA that receives contributions made under a SEP. The term SEP includes a salary reduction SEP (SARSEP) described in section 408(k)(6).

(4) *SIMPLE IRA*. Section 408(p) describes a SIMPLE IRA Plan as an employer-sponsored plan under which an employer can make contributions to SIMPLE IRAs established for its employees. The term SIMPLE IRA means an IRA to which the only contributions that can be made are contributions under a SIMPLE IRA Plan or rollovers or transfers from another SIMPLE IRA.

(5) *Roth IRA*. The term Roth IRA means an IRA that meets the requirements of section 408A.

(b) *Other defined terms or phrases*—(1) *4-year spread*. The term 4-year spread is described in § 1.408A–4 A–8.

(2) *Conversion*. The term conversion means a transaction satisfying the requirements of § 1.408A–4 A–1.

(3) *Conversion amount or conversion contribution*. The term conversion amount or conversion contribution is the amount of a distribution and contribution with respect to which a conversion described in § 1.408A–4 A–1 is made.

(4) *Modified AGI*. The term modified AGI is defined in § 1.408A–3 A–5.

(5) *Recharacterization*. The term recharacterization means a transaction described in § 1.408A–5 A–1.

(6) *Recharacterized amount or recharacterized contribution*. The term recharacterized amount or recharacterized contribution means an amount or contribution treated as contributed to an IRA other than the one to which it was originally contributed pursuant to a recharacterization described in § 1.408A–5 A–1.

(7) *Taxable conversion amount*. The term taxable conversion amount means the portion of a conversion amount includible in income on account of a conversion, determined under the rules of section 408(d)(1) and (2).

(8) *Tax-free transfer*. The term tax-free transfer means a tax-free rollover described in section 402(c), 402(e)(6), 403(a)(4), 403(a)(5), 403(b)(8), 403(b)(10) or 408(d)(3), or a tax-free trustee-to-trustee transfer.

(9) *Treat an IRA as his or her own*. The phrase treat an IRA as his or her own means to treat an IRA of a surviving spouse for which one is the beneficiary as his or her own IRA after the death of the IRA owner in accordance with the terms of the IRA instrument or in the manner provided in the regulations under section 408(a)(6) or (b)(3).

(10) *Trustee*. The term trustee includes a custodian or issuer (in the case of an annuity) of an IRA (except where the context clearly indicates otherwise).

§ 1.408A–9 Effective date.

Q–1. To what taxable years do §§ 1.408A–1 through 1.408A–8 apply?

A–1 Sections 1.408A–1 through 1.408A–8 apply to taxable years beginning on or after January 1, 1998.

Michael P. Dolan,

Deputy Commissioner of Internal Revenue.

[FR Doc. 98–23664 Filed 8–31–98; 11:11 am]

BILLING CODE 4830–01–U

DEPARTMENT OF THE INTERIOR

Office of Surface Mining Reclamation and Enforcement

30 CFR Parts 707 and 874

RIN 1029–AB89

Abandoned Mine Land (AML) Reclamation Program; Enhancing AML Reclamation

AGENCY: Office of Surface Mining Reclamation and Enforcement, Interior.

ACTION: Proposed rule, reopening and extension of comment period.

SUMMARY: The Office of Surface Mining Reclamation and Enforcement (OSM) is again reopening and extending the comment period for the proposed rule, Enhancing AML Reclamation, published on June 25, 1998 (63 FR 34768). The prior extension of the comment period closed on August 11, 1998. It is being reopened and extended for 15 days.

DATES: *Written comments:* We will accept written comments on the proposed rule until 5 p.m., Eastern time, on September 18, 1998.

ADDRESSES: If you wish to comment, you may mail or hand deliver comments to the Office of Surface Mining Reclamation and Enforcement, Administrative Record, Room 101, 1951 Constitution Avenue, NW, Washington, DC 20240. Comments submitted on the proposed rule are available for inspection at this address. You may also comment via the Internet to OSM's Administrative Record at: osmrules@osmre.gov.

FOR FURTHER INFORMATION CONTACT: D.J. Growitz, Office of Surface Mining Reclamation and Enforcement, U.S. Department of the Interior, 1951 Constitution Avenue, NW, Washington, DC 20240; Telephone: 202–208–2634. E-Mail: dgrowitz@osmre.gov.

SUPPLEMENTARY INFORMATION: OSM is reopening and extending the public comment period on the proposed rule, Enhancing AML Reclamation, published in the **Federal Register** on June 25, 1998 (63 FR 34768), in order to accept two comments which were submitted after the close of the comment period. Anyone wishing to examine the comments submitted on the proposed rule may do so at the location listed under **ADDRESSES**.

In the proposed rule, OSM is proposing revisions regarding the financing of Abandoned Mine Land reclamation (AML) projects that involve the incidental extraction of coal. Projections of receipts to the AML fund through the year 2004, when the authority to collect fees will expire, strongly indicate that there will be insufficient money to address all problems currently listed in the Abandoned Mine Land Inventory System. Given these limited AML reclamation resources, OSM is seeking an innovative way for AML agencies, working with contractors, to maximize available funds to increase AML reclamation.

The first revision would amend the definition of *government-financed construction* to allow less than 50 percent government funding when the construction is an approved AML project under the Surface Mining Control and Reclamation Act of 1977 (SMCRA). The existing definition requires a minimum government contribution of 50 percent to exempt government-financed construction from regulation under SMCRA.

The second revision would add a new section which would require specific consultations and concurrences with the Title V regulatory authority for AML construction projects receiving less than

50 percent government financing. These consultations and concurrences are intended to ensure the appropriateness of the project being undertaken as a Title IV AML project and not under the Title V regulatory program.

Dated: August 31, 1998.

Mary Josie Blanchard,

Assistant Director, Program Support.

[FR Doc. 98–23757 Filed 9–2–98; 8:45 am]

BILLING CODE 4310–05–M

ENVIRONMENTAL PROTECTION AGENCY

40 CFR Part 51

[FRL–6154–9; Docket No A–95–38

Notice of Availability of Additional Information Related to Proposed Regional Haze Regulations; Solicitation of Comments

AGENCY: Environmental Protection Agency (EPA).

ACTION: Notice of availability.

SUMMARY: On July 31, 1997, EPA published proposed revisions to State implementation plan (SIP) requirements to address regional haze visibility impairment in the Nation's most treasured national parks and wilderness areas. The public comment period on those regulations closed on December 5, 1997. The purpose of this notice is to provide the public with an opportunity to comment on two specific issues for which additional information became available after the close of the comment period. The EPA is not reopening the comment period for any other issues related to the proposed regional haze rule.

The first issue relates to the Grand Canyon Visibility Transport Commission (Commission) and specific recommendations provided in a recent letter from the Western Governors' Association (WGA). The second issue relates to recent transportation legislation, Pub. L. 105–178, the Transportation Equity Act for the 21st Century (TEA–21), which affects the timeframe for implementation of the regional haze program. The EPA is making this information available for comment now so that any public comments on these two issues may be considered before publication of the final rule.

DATES: Written comments must be received by October 5, 1998.

ADDRESSES: Information related to the proposed regional haze rule is available in EPA's Air and Radiation Docket and Information Center, docket number A–95–38. The docket is located at the following address: EPA Air and Radiation Docket and Information Center; 401 M Street SW; Room M–1500 (Mail Code 6102); Washington, DC 20460; Attention: Docket Number A–95–38. The docket is available for public inspection and copying between 8:30 a.m. and 3:30 p.m., Monday through Friday. A reasonable fee may be charged for copying.

Three additional items related to this notice of availability can be obtained from docket number A–95–38: the June 29, 1998 letter from the WGA (signed by Governor Michael Leavitt of Utah) (item VIII–G–76), the draft translation of the WGA's recommendations into regulatory language by EPA (item VIII–I–02), and a copy of the TEA–21 legislation provisions affecting the regional haze program (item VIII–I–01). The above documents may also be downloaded from the Internet at: http://www.epa.gov/ttn/oarpg/t1sn.html.

Comments on today's notice and the materials referenced herein should be submitted (in duplicate if possible) to the address listed above. Comments may also be submitted to EPA by electronic mail at the following address: A-and-R-Docket@epamail.epa.gov. Electronic comments must be submitted as an ASCII file avoiding the use of special characters and any form of encryption. Comments and data also will be accepted on computer disk in WordPerfect 5.1 format or ASCII file format. All comments and data in electronic form must be identified by the docket number A–95–38. Electronic comments on this notice also may be filed online at many Federal Depository Libraries.

FOR FURTHER INFORMATION CONTACT: Rich Damberg (telephone 919–541–5592), Mail Drop 15, EPA, Air Quality Strategies and Standards Division, Research Triangle Park, North Carolina, 27711. Internet address: damberg.rich@epa.gov.

SUPPLEMENTARY INFORMATION: We are providing the public with the opportunity to comment on additional information related to the regional haze rule proposed on July 31, 1997. We are requesting comment only on these two issues, and we are not reopening the comment period on any other issues related to the proposal.

I. Letter From the Western Governors' Association

In the notice of proposed rulemaking for the regional haze program, we discussed extensively the June 1996 report from the Grand Canyon Visibility Transport Commission, *Recommendations for Improving Western Vistas,* 62 FR 41138, 41141–41143 (July 31, 1997). The EPA highlighted the key recommendations developed by the Commission in a number of areas, including those recommendations regarding stationary sources, mobile sources, and prescribed fire. In concluding this section of the notice we stated that EPA * * * seeks public comment on the manner it has proposed to address the Commission's recommendations in this rulemaking, and EPA requests alternative suggestions for addressing the recommendations.'' (62 FR 41143).

On June 29, 1998, we received a letter from Governor Leavitt of Utah, on behalf of the WGA, that specifically addresses how EPA should treat the Commission's recommendations within the national rule. The WGA developed the letter in conjunction with several stakeholders involved in the Commission. The EPA was not a part of this process. In his cover letter, Governor Leavitt specifically requested that EPA reopen the public comment period for 30 days.

A key element of the WGA's recommendations is the proposal that if the States in the Commission's transport region provide an acceptable ''Annex'' to EPA in 2000 outlining interim milestones for regional SO_2 reductions, then SIPs meeting the overall package of recommended elements would assure reasonable progress and meet the basic SIP requirements set forth under section 169A of the Clean Air Act (CAA) (including a long-term strategy, best available retrofit technology, and other measures as necessary). Given the detailed nature of these new comments, and the fact that they were developed with broad input, EPA is fulfilling Governor Leavitt's request to reopen the comment period for the proposed rule. The EPA requests comments on all aspects of the WGA letter, particularly on whether these recommendations assure reasonable progress under the CAA and on how we should use this new information in preparing our final rule.

In addition to the letter from the WGA, we are also providing, for illustrative purposes, draft regulatory text that attempts to translate the WGA recommendations into regulatory language. The regulatory language, as drafted, would add a new section 51.309 to the regional haze regulation. By providing this translation of the WGA letter into draft regulatory text, EPA is providing the public with an example of how these recommendations could be implemented under the SIP process. The WGA believes its recommendations will assure reasonable progress under

the regional haze program. The EPA is seeking public comment on whether this translation accurately reflects the WGA recommendations, and on whether a SIP incorporating these provisions would satisfy the basic statutory requirements of section 169A as noted above.

In drafting the regulatory language, we have attempted to incorporate all of the WGA's recommendations for specific regulatory requirements into regulatory text except for the recommendation to include a ''binding commitment'' on EPA to ''fully consider'' certain national mobile source measures. While we are not expressing a position on this recommendation, we are unsure of how or whether the regulatory structure of the regional haze proposal can incorporate this provision, and we request comment on how and whether this should be done.

The WGA letter contains numerous suggestions for preamble discussions to accompany the final regional haze rule. These preamble suggestions include clarifications of the rationale for certain conclusions, explanations to clarify WGA's regulatory language suggestions, and discussions of a number of WGA's suggested policy interpretations for implementation of the final rule. At this time, the EPA has not drafted specific preamble language in reaction to these suggestions. We do, however, request comment on the concepts and suggestions that WGA recommends that EPA include in the preamble to the final rule.

The WGA letter, and the regulatory language are available for review in the docket as items VIII–G–76 and VIII–I–02, respectively. In addition, these items are on the Internet at http://www.epa.gov/ttn/oarpg/t1sn.html.

II. TEA–21 Legislation

In the proposed rule, we stated our intent to coordinate SIP revisions for regional haze with the schedule for SIP revisions under the new $PM_{2.5}$ standard (see 62 FR 41151). The proposed rule also required States to submit a SIP revision with basic planning provisions and commitments within 12 months, consistent with the requirements of section 169B of the CAA. For States with $PM_{2.5}$ nonattainment areas, the proposal required States to submit control strategies at the same time as $PM_{2.5}$ control strategies (62 FR 41159).

On June 9, 1998, the President signed the TEA–21. Section 4102(c)(2) of the TEA–21 revises the timing requirements for submission of SIPs for the visibility program. However, TEA–21 is consistent with the desire expressed by EPA in the notice of proposed rulemaking to harmonize the visibility program with the $PM_{2.5}$ program. Section 4102(c)(2) reads as follows:

> (2) For any area designated as nonattainment for the July 1997 $PM_{2.5}$ national ambient air quality standard in accordance with the schedule set forth in this section, notwithstanding the time limit prescribed in paragraph (2) of section 169B(e) of the Clean Air Act, the Administrator shall require State implementation plan revisions referred to in such paragraph (2) to be submitted at the same time as State implementation plan revisions referred to in section 172 of the Clean Air Act implementing the revised national ambient air quality standard for fine particulate matter are required to be submitted. For any area designated as attainment or unclassifiable for such standard, the Administrator shall require the State implementation plan revisions referred to in such paragraph (2) to be submitted 1 year after the area has been so designated. The preceding provisions of this paragraph shall not preclude the implementation of the agreements and recommendations set forth in the Grand Canyon Visibility Transport Commission Report dated June 1996.

The Conference Report accompanying TEA–21 explains the provisions affecting the visibility program. The Conference Report states:

> The Conferees recognize that the Regional Haze regulation has not been finalized and the Administrator of the Environmental Protection Agency (EPA) is still considering the views of various stakeholders. The Conferees agree with EPA's public statements that the schedule for the State Implementation Plan due pursuant to section 169B(e)(2) of the Clean Airport [sic] Act should be harmonized with the Schedule for State Implementation Plan submissions required for $PM_{2.5}$ ambient air quality standard promulgated in July, 1997.

As required by Congress, we intend to incorporate the deadlines contained in the TEA–21 into the final regional haze rule. The TEA–21 provision requires specific deadlines for regional haze SIP submissions within 1 year after an ''area'' is designated as attainment or unclassified for $PM_{2.5}$, and at the same time that $PM_{2.5}$ SIPs are due for ''areas'' that are designated as nonattainment for $PM_{2.5}$.

There is one potential area of concern with the TEA–21 provisions for which we seek public comment. While the deadlines and statement of intent are generally clear, the TEA–21 legislation does not address the deadlines that would apply for a regional planning effort that incorporated both attainment and nonattainment areas. While certain Class I areas may be affected only by emissions from attainment and/or unclassified areas, we do not believe that Congress intended to inhibit regional planning efforts by requiring area-by-area submittals (sometimes within a single State) when both attainment and nonattainment areas are included. We believe that this result would not be consistent with the nature of the regional haze problem, which, as noted in the preamble to the proposed rulemaking, aims to address pollutants which can travel hundreds of miles. Additionally, we do not believe that this result would be consistent with the expressed intent of Congress to harmonize regional haze planning efforts with those for $PM_{2.5}$. Accordingly, we intend to incorporate an optional approach into the final rule which will allow States to first submit SIP revisions which commit to specific integrated regional planning efforts but which do not set forth control strategies. Under this approach, States committing to regional planning would have coordinated deadlines for regional haze control strategies for unclassifiable, attainment and nonattainment areas within a single planning region. We recognize that this approach could have the effect of delaying control strategy plan submittal dates for some areas, but we believe that such an option will support effective coordination between the $PM_{2.5}$ and regional haze programs and is consistent with the statement of congressional intent. Accordingly, we request comment on this interpretion of TEA–21.

III. Where To Send Comments

Please send comments directly to Docket A–95–38 at the address previously provided and specify that they are in response to this notice. Comments will be forwarded from the Air Docket to the appropriate EPA staff.

Dated: August 26, 1998.

Lydia Wegman,

Acting Director, Office of Air Quality Planning and Standards.

[FR Doc. 98–23678 Filed 9–2–98; 8:45 am]

BILLING CODE 6560–50–U

ENVIRONMENTAL PROTECTION AGENCY

40 CFR Part 52

[CA 102–0091b; FRL–6151–1]

Approval and Promulgation of State Implementation Plans; California State Implementation Plan Revision, Yolo-Solano Air Quality Management District

AGENCY: Environmental Protection Agency (EPA).

ACTION: Proposed rule.

SUMMARY: EPA is proposing to approve revisions to the California State Implementation Plan (SIP) which concerns the control of oxides of nitrogen (NO_X) emissions from stationary gas turbines within the Yolo-Solano Air Quality Management District.

The intended effect of proposing approval of this rule is to regulate emissions of NO_X in accordance with the requirements of the Clean Air Act, as amended in 1990 (CAA or the Act). In the Final Rules Section of this **Federal Register**, the EPA is approving the state's SIP revision as a direct final rule without prior proposal because the Agency views this as a noncontroversial revision amendment and anticipates no adverse comments. A detailed rationale for this approval is set forth in the direct final rule. If no adverse comments are received, no further activity is contemplated in relation to this rule. If EPA receives adverse comments, the direct final rule will not take effect and all public comments received will be addressed in a subsequent final rule based on this proposed rule. EPA will not institute a second comment period on this rule. Any parties interested in commenting on this rule should do so at this time.

DATES: Written comments must be received by October 5, 1998.

ADDRESSES: Written comments should be addressed to: Andrew Steckel, Rulemaking Office (AIR–4), Air Division, U.S. Environmental Protection Agency, Region IX, 75 Hawthorne Street, San Francisco, CA 94105–3901.

Copies of the rule revisions and EPA's evaluation report of each rule are available for public inspection at EPA's Region IX office during normal business hours. Copies of the submitted rule revisions are also available for inspection at the following locations:

California Air Resources Board, Stationary Source Division, Rule Evaluation Section, 2020 ''L'' Street, Sacramento, CA 95812.

Yolo-Solano Air Quality Management District, 1947 Galileo court, Suite 103, Davis, CA 95616.

FOR FURTHER INFORMATION CONTACT: Andrew Steckel, Rulemaking Office (AIR–4), Air Division, U.S. Environmental Protection Agency, Region IX, 75 Hawthorne Street, San Francisco, CA 94105–3901, Telephone: (415) 744–1185.

SUPPLEMENTARY INFORMATION: This document concerns Yolo-Solano Air Quality Management District's Rule 2.34, Stationary Gas Turbines, submitted to EPA on September 28, 1994 by the California Air Resources Board. For further information, please see the information provided in the Direct Final action that is located in the Rules Section of this **Federal Register**.

Authority: 42 U.S.C. 7401 *et seq.*

Dated: August 13, 1998.

Laura Yoshi,

Deputy Regional Administrator, Region IX.

[FR Doc. 98–23501 Filed 9–2–98; 8:45 am]

BILLING CODE 6560–50–P

ENVIRONMENTAL PROTECTION AGENCY

40 CFR Part 52

[KY104–1–9818b; FRL–6152–8]

Approval and Promulgation of Implementation Plans Commonwealth of Kentucky

AGENCY: Environmental Protection Agency (EPA).

ACTION: Proposed rule.

SUMMARY: The EPA proposes to approve the State Implementation Plan (SIP) revision submitted by the Commonwealth of Kentucky which revises the emissions budget for use in determination of Transportation Conformity in the Edmonson and Owensboro ozone maintenance area. In the final rules section of this **Federal Register**, the EPA is approving the State's SIP revision as a direct final rule without a prior proposal because the Agency views this as a noncontroversial revision and anticipates no adverse comments. A detailed rationale for the approval is set forth in the direct final rule. If no adverse comments are received in response to that direct final rule, no further activity is contemplated in relation to this proposed rule. If EPA receives adverse comments, the direct final rule will be withdrawn and all public comments received will be addressed in a subsequent final rule based on this proposed rule. The EPA will not institute a second comment period on this rule. Any parties interested in commenting on this rule should do so at this time.

DATES: To be considered, comments must be received by October 5, 1998.

ADDRESSES: Written comments should be addressed to: Kelly Sheckler at the Region 4, Environmental Protection Agency, Air Planning Branch, 61 Forsyth Street, SW, Atlanta, Georgia 30303.

Copies of the documents relative to this action are available for public inspection during normal business hours at the following locations. The persons wanting to examine these documents should make an appointment with the appropriate office at least 24 hours before the visiting day. Reference file number KY104–9818. The Region 4 office may have additional background documents not available at the other locations.

Air and Radiation Docket and Information Center (Air Docket 6102), U.S. Environmental Protection Agency, 401 M Street, SW, Washington, D.C. 20460.

Environmental Protection Agency, Region 4 Air Planning Branch, 61 Forsyth Street, SW, Atlanta, Georgia 30303.

Kentucky Department for Environmental Protection, 803 Schenkel Lane, Frankfort, Kentucky 40601.

FOR FURTHER INFORMATION CONTACT: Kelly Sheckler at (404) 562-9042. Reference file KY–104–9818.

SUPPLEMENTARY INFORMATION: For additional information see the direct final rule which is published in the rule's section of this **Federal Register**.

Dated: July 30, 1998.

A. Stanley Meiburg,

Acting Regional Administrator, Region 4.

[FR Doc. 98–23503 Filed 9–2–98; 8:45 am]

BILLING CODE 6560–50–P

CORPORATION FOR NATIONAL AND COMMUNITY SERVICE

45 CFR Parts 1207 and 2551

RIN 3045–AA17

Senior Companion Program

AGENCY: Corporation for National and Community Service.

ACTION: Notice of proposed rulemaking.

SUMMARY: The Corporation for National and Community Service (hereinafter the ''Corporation'') proposes to amend the regulations governing the administration of the Senior Companion Program (SCP). These amendments will: implement changes in the program's authorizing legislation; establish minimum program requirements with greater clarity; update program operations to make them responsive to changes that have occurred since the regulations were last published; consolidate requirements from outdated sources into one user friendly document; balance increased flexibility with increased responsibility and accountability at the local level; and incorporate new concepts of programming to highlight the accomplishments and impact of senior service.

The format used is designed to make the requirements easy for local sponsors and project managers to understand. It integrates related topics under one heading for easy reference.

Upon adoption, the proposed amendments will supersede the old ACTION regulations and the SCP Operations Handbook.

DATES: Comments must be submitted on or before November 2, 1998.

ADDRESSES: Comments should be sent to the Corporation for National Service, Director, National Senior Service Corps, 1201 New York Avenue, NW, Washington, DC 20525.

FOR FURTHER INFORMATION CONTACT: Rey Tejada at 202–606–5000, ext. 197.

SUPPLEMENTARY INFORMATION: The requirements governing the administration of SCP projects are currently embodied in two documents: 45 CFR Part 1207 which was last published in the **Federal Register** on June 10, 1983, and the SCP Operations Handbook. The proposed amendments will combine all minimum program requirements in just one document to make it easier for interested parties to secure basic program information.

The proposed amendments include modifications to current program requirements including those applicable to: the responsibilities of a SCP sponsor, community participation in local project operations, full-time project director, volunteer income eligibility, volunteer service schedule, volunteer leave, client care plan, authority to approve grants, waiver of non-federal support, ratio of volunteer cost reimbursement, and compensation for service.

The proposed amendments also reflect changes in the program's administrative structure resulting from the merger of the former ACTION agency into the Corporation in April 1994.

Regulatory Flexibility Act and Unfunded Mandate Reform Act

The General Counsel, in accordance with the Regulatory Flexibility Act (5 U.S.C. 606(b)), has reviewed this regulation and by approving certifies that this proposed rule will not have a significant impact on small business entities.

Under the Unfunded Mandates Reform Act of 1995, the Corporation certifies that this proposed rule does not include any Federal mandate that may result in the expenditure by State, local, and tribal governments, in the aggregate, or by the private sector, of $100,000,000 or more (adjusted annually for inflation) in any one year.

Paperwork Reduction Act of 1995

These proposed regulations have been examined under the Paperwork Reduction Act of 1995 and have been found to contain no information collection requirements.

Intergovernmental Review

This program is subject to the requirements of Executive Order 12372. The objective of the Executive order is to foster an intergovernmental partnership and strengthened federalism by relying on processes developed by State and local governments for coordination and review of proposed Federal financial assistance.

In accordance with the order, this document is intended to provide early notification of the Corporation's specific plans and actions for this program.

Executive Order 12866

This regulation has been drafted and reviewed in accordance with Executive Order 12866. The Office of Management and Budget has reviewed this rule and has determined that this rule is not a ''significant regulatory action'' under Executive Order 12866, section 3(f), Regulatory Planning and Review.

Participation in the Rulemaking

The SCP Program Council, a group established to provide advice to the Corporation on program related issues, was consulted, reviewed and gave recommendations on initial drafts of the proposed regulations. Council membership is comprised of SCP project staff and sponsor representatives, as well as selected staff from Corporation field offices. A similar opportunity was given to all Corporation field staff, a group that plays an important role in the implementation of program regulations.

Distribution Table

Old 45 CFR part 1207	New 45 CFR part 2551
1207.1–1	2551.11
1207.2–1	2551.21
1207.3–1	2251.31
1207.4–1	2251.41
1207.5–1	2251.51
	2251.61
	2251.71
	2251.81
	2251.91
	2251.101
	2251.111
	2251.121

List of Subjects

45 CFR Part 1207

Aged, Grant programs—social programs, Reporting and recordkeeping requirements, Volunteers.

45 CFR Part 2551

Aged, Grant programs-social programs, Volunteers.

Accordingly, and under the authority of 42 U.S.C. 12501 *et seq.*, the Corporation proposes to amend 45 CFR chapters XII and XXV as follows:

PART 1207—[REDESIGNATED AS PART 2551]

1. Part 1207 in 45 CFR chapter XII is redesignated as part 2551 in 45 CFR chapter XXV and is revised to read as follows:

PART 2551—SENIOR COMPANION PROGRAM

Subpart A—General

Sec.

2551.11 What is the Senior Companion Program?
2551.12 Definitions.

Subpart B—Eligibility and Responsibilities of a Sponsor

2551.21 Who is eligible to serve as a sponsor?
2551.22 What are the responsibilities of a sponsor?
2551.23 What are a sponsor's program responsibilities?
2551.24 What are a sponsor's responsibilities for securing community participation?
2551.25 What are a sponsor's administrative responsibilities?
2551.26 May a sponsor administer more than one program grant from the Corporation?

Subpart C—Suspension and Termination of Corporation Assistance

2551.31 What are the rules on suspension, termination, and denial of refunding of grants?

Subpart D—Senior Companion Eligibility, Status, and Cost Reimbursements

2551.41 Who is eligible to be a Senior Companion?
2551.42 What income guidelines govern eligibility to serve as a stipended Senior Companion?
2551.43 What is considered income for determining volunteer eligibility?
2551.44 Is a Senior Companion a federal employee, an employee of the sponsor or of the volunteer station?
2551.45 What cost reimbursements are provided to Senior Companions?
2551.46 May the cost reimbursements of a Senior Companion be subject to any tax or charge, be treated as wages or compensation, or affect eligibility to receive assistance from other programs?

Subpart E—Senior Companion Terms of Service

2551.51 What are the terms of service of a Senior Companion?
2551.52 Under what circumstances may a Senior Companion be allowed to serve a modified service schedule?
2551.53 What factors are considered in determining a Senior Companion's service schedule?
2551.54 Under what circumstances may a Senior Companion's service be terminated?
2551.55 Are Senior Companions eligible for leave?

Subpart F—Responsibilities of a Volunteer Station

2551.61 When may a sponsor serve as a volunteer station?
2551.62 What are the responsibilities of a volunteer station?

Subpart G—Senior Companion Placements and Assignments

2551.71 Must all Senior Companion placements be year-round?
2551.72 What requirements govern the assignment of Senior Companions?
2551.73 Is a written care plan required for each volunteer station and what purpose does it serve?

Subpart H—Clients Served

2551.81 What type of clients are eligible to be served?

Subpart I—Application and Fiscal Requirements

2551.91 Application and award process.
2551.92 Project funding requirements.
2551.93 Grants management requirements.

Subpart J—Non-Stipended Senior Companions

2551.101 What rule governs the recruitment and enrollment of persons who do not meet the income eligibility guidelines to serve as Senior Companions without stipends?
2551.102 What are the conditions of service of non-stipended Senior Companions?
2551.103 Must a sponsor be required to enroll non-stipended Senior Companions?
2551.104 May Corporation funds be used for non-stipended Senior Companions?

Subpart K—Non-Corporation Funded SCP Projects

2551.111 Under what conditions can an agency or organization sponsor a Senior Companion project without Corporation funding?
2551.112 What benefits are a non-Corporation funded project entitled to?
2551.113 What financial obligation does the Corporation incur for non-Corporation funded projects?
2551.114 What happens if a non-Corporation funded sponsor does not comply with the Memorandum of Agreement?

Subpart L—Restrictions and Legal Representation

2551.121 What legal limitations apply to the operation of the Senior Companion Program and to the expenditure of grant funds?
2551.122 What legal coverage does the Corporation make available to Senior Companions ?

Authority: 42 U.S.C. 4950 *et seq.*, 5013.

Subpart A—General

§ 2551.11 What is the Senior Companion Program?

The Senior Companion Program provides grants to eligible agencies and organizations to engage older persons, particularly those with limited incomes, in volunteer service to meet critical community needs. Program funds are used to support Senior Companions in providing supportive, individualized services to help adults with special needs maintain their dignity and independence. The program uses the skills and experiences of individuals age 60 and over as a resource to address local needs, and seeks to enrich the lives of older people through their participation in community service.

§ 2551.12 Definitions

(a) *Act.* The Domestic Volunteer Service Act of 1973 as amended, Pub. L. 93–113, Oct. 1, 1973, 87 Stat. 396, 42 U.S.C. 4950 *et seq.*

(b) *Adult with special needs.* Any individual over 21 years of age who has one or more physical, emotional, or mental health limitations and is in need of assistance to achieve and maintain their highest level of independent living.

(c) *Adequate Staffing Level.* The number of project staff or full-time equivalent needed by a sponsor to manage NSSC project operations considering such factors as: number of budgeted Volunteer Service Years (VSY), number of volunteer stations, and the size of the service area.

(d) *Annual income.* Total cash receipts from all sources over the preceding 12 months including: the applicant or enrollee's income and, the applicant or enrollee's spouse's income, if the spouse lives in the same residence. The value of shelter, food, and clothing, may be counted if provided at no cost by persons related to the applicant/enrollee, or spouse.

(e) *Care plan.* A written description of a Senior Companion's assignment with a client. The plan defines the goals for the client to be attained through the relationship with a Senior Companion and the specific activities to be performed by the Senior Companion in the assignment.

(f) *Chief Executive Officer.* The Chief Executive Officer of the Corporation appointed under the Trust Act.

(g) *Corporation.* The Corporation for National and Community Service established under the Trust Act. The Corporation is also sometimes referred to as CNCS.

(h) *Cost Reimbursements.* Reimbursements provided to volunteers such as stipends to cover incidental costs, meals, and transportation, to enable them to serve without cost to themselves. Also included are the costs of annual physical examinations, volunteer insurance and recognition which are budgeted as Volunteer Expenses.

(i) *In-home.* The non-institutional assignment of a Senior Companion in a private residence.

(j) *Letter of Agreement.* A written agreement between a volunteer station, the sponsor and the adult served or the persons legally responsible for that adult. It authorizes the assignment of a Senior Companion in the clients home, defines the Senior Companion's activities and delineates specific arrangements for supervision.

(k) *Memorandum of Understanding.* A written statement prepared and signed by the Senior Companion project sponsor and the volunteer station that identifies project requirements, working relationships and mutual responsibilities.

(l) *National Senior Service Corps (NSSC).* The collective name for the Foster Grandparent Program (FGP), the Retired and Senior Volunteer Program (RSVP), the Senior Companion Program (SCP), and Demonstration Programs established under Title II Parts A, B, C, and E, of the Act. NSSC is also referred to as the ''Senior Corps''.

(m) *Non-Corporation Support (Required).* The percentage share of non-Federal cash and in-kind contributions, required to be raised by the sponsor in support of the grant.

(n) *Non-Corporation Support (Excess).* The amount of non-Federal cash and in-kind contributions generated by a sponsor in excess of the required percentage.

(o) *Project.* The locally planned and implemented Senior Companion Program activity or set of activities as agreed upon between a sponsor and the Corporation.

(p) *Qualified Individual With a Disability.* An individual with a disability who, with or without reasonable accommodation, can perform the essential functions of a volunteer position that such individual holds or desires. For purposes of the Americans With Disabilities Act, consideration

shall be given to a sponsor's or volunteer station's judgment as to what functions of a volunteer position are essential. If a sponsor has prepared a written description before advertising or interviewing applicants for the position, the written description shall be considered evidence of the essential functions of the volunteer position. This definition includes an individual with a physical or mental impairment as defined in section 101(8) of the Americans With Disabilities Act of 1990 (42 U.S.C. 12111(8)).

(q) *Service Area.* The geographically defined area in which Senior Companions are recruited, enrolled, and placed on assignments.

(r) *Service Schedule.* A written delineation of the days and times a Senior Companion serves each week.

(s) *Sponsor.* A public agency or private nonprofit organization that is responsible for the operation of a Senior Companion project.

(t) *Stipend.* A payment to Senior Companions to enable them to serve without cost to themselves. The amount of the stipend is determined by the Corporation and is payable in regular installments. The minimum amount of the stipend is set by law and shall be adjusted by the CEO from time to time.

(u) *Trust Act.* The National and Community Service Trust Act of 1993, Pub. L. 103–82, Sept. 21, 1993, 107 Stat. 785.

(v) *United States and States.* Each of the several States, the District of Columbia, the U.S. Virgin Islands, the Commonwealth of Puerto Rico, Guam and American Samoa, and Trust Territories of the Pacific Islands.

(w) *Volunteer Station.* A public agency, private nonprofit organization or proprietary health care agency or organization that accepts the responsibility for assignment and supervision of Senior Companions in health, social service or related settings such as multi-purpose centers, home health care agencies or similar establishments. Each volunteer station must be licensed or otherwise certified, when required, by the appropriate state or local government. Private homes are not volunteer stations.

Subpart B—Eligibility and Responsibilities of a Sponsor

§ 2551.21 Who is eligible to serve as a sponsor?

The Corporation awards grants to public agencies, including Indian tribes and non-profit private organizations, in the United States that have the authority to accept and the capability to administer a Senior Companion project.

§ 2551.22 What are the responsibilities of a sponsor?

A sponsor is responsible for fulfilling all project management requirements necessary to accomplish the purposes of the Senior Companion Program as specified in the Act. A sponsor shall not delegate or contract these responsibilities to another entity. The sponsor shall comply with all program regulations and policies, and grant provisions prescribed by the Corporation.

§ 2551.23 What are a sponsor's program responsibilities?

A sponsor shall:

(a) Focus Senior Companion resources on critical problems affecting the frail elderly and other adults with special needs within the project's service area.

(b) Assess on an ongoing basis or collaborate with other community organizations in the assessment of the needs of the client population in the community and develop strategies to respond to those needs using the resources of Senior Companions.

(c) Develop and manage a system of volunteer stations by:

(1) Insuring that a volunteer station is a public or non-profit private organization, or an eligible proprietary health care agency, capable of serving as a volunteer station for the placement of Senior Companions;

(2) Ensuring that the placement of Senior Companions is governed by a Memorandum of Understanding:

(i) That is negotiated prior to placement;

(ii) That specifies the mutual responsibilities of the station and sponsor; and

(iii) That is renegotiated at least every three years; and

(3) Reviewing volunteer placements regularly to ensure that clients are eligible to be served.

(d) Develop service opportunities that consider the skills and experiences of the Senior Companion.

(e) Consider the demographic make-up of the project service area in the enrollment of Senior Companions, taking special efforts to recruit eligible individuals from minority groups, persons with disabilities, and under-represented groups.

(f) Provide Senior Companions: with assignments that show direct and demonstrable benefits to the adults and the community served, the Senior Companions, and the volunteer station; with required cost reimbursements specified in § 2551.45; with the opportunity to serve year-round; with not less than 40 hours of pre-service orientation and 4 hours of monthly in-service training.

(g) Encourage the most efficient and effective use of Senior Companions by coordinating project services and activities with related national, state and local programs, including other Corporation programs.

(h) Conduct an annual appraisal of volunteers' performance and annual review of their income eligibility.

(i) Develop, and regularly update, a strategic plan that includes the sponsor's vision and goals for the project.

(j) Develop, and annually update, a plan for promoting senior service within the project's service area.

(k) Annually assess the accomplishments and impact of the project on the identified needs and problems of the client population in the community.

(l) Establish written service policies for Senior Companions that include but are not limited to annual and sick leave, holidays, service schedules, termination, appeal procedures, meal and transportation reimbursements.

§ 2551.24 What are a sponsor's responsibilities for securing community participation?

(a) A sponsor shall secure community participation in local project operation by establishing an Advisory Council or a similar organizational structure with a membership that includes people:

(1) Knowledgeable of human and social needs of the community;

(2) Competent in the field of community service and volunteerism;

(3) Capable of helping the sponsor meet its administrative and program responsibilities including fund-raising, publicity and impact programming;

(4) With interest in and knowledge of the capability of older adults; and

(5) Of a diverse composition that reflects the demographics of the service area.

(b) The sponsor determines how such participation shall be secured, consistent with the provisions of paragraphs (a)(1) through (a)(5) of this section.

§ 2551.25 What are a sponsor's administrative responsibilities?

A sponsor shall:

(a) Assume full responsibility for securing maximum and continuing community financial and in-kind support to operate the project successfully.

(b) Develop a written delegation of authority that carefully defines and clearly delineates project roles and responsibilities retained by the sponsor from those delegated to project staff.

(c) Provide levels of staffing and resources appropriate to accomplish the

purposes of the project and carry out those project management responsibilities outlined in the above mentioned delegation of authority and provide necessary administrative support to such project staff.

(d) Employ a full-time project director to accomplish program objectives and manage the functions and activities delegated to project staff for NSSC program(s) within its control. A full-time project director shall not serve concurrently in another capacity, paid or unpaid, during established working hours. The project director may participate in activities to coordinate program resources with those of related local agencies, boards or organizations. A sponsor may negotiate the employment of a part-time project director with the Corporation when it can justify that such an arrangement will result in cost savings applied proportionately to both federal and non-federal funds without adversely affecting the size, scope, and quality of project operations.

(e) Consider all project staff as sponsor employees subject to its personnel policies and procedures.

(f) Compensate project staff at a level that is comparable with other similar staff positions in the sponsor organization and/or project service area.

(g) Establish risk management policies and procedures covering project and Senior Companion activities. This includes provision of appropriate insurance coverage for Senior Companions, vehicles and other properties used in the project.

(h) Establish record keeping/reporting systems in compliance with Corporation requirements that ensure quality of program and fiscal operations, facilitate timely and accurate submission of required reports; and cooperate with Corporation evaluation and data collection efforts.

(i) Comply with and ensure that all volunteer stations comply with, all applicable civil rights laws and regulations, including providing reasonable accommodation to qualified individuals with disabilities.

§ 2551.26 May a sponsor administer more than one program grant from the Corporation?

A sponsor may administer more than one Corporation program.

Subpart C—Suspension and Termination of Corporation Assistance

§ 2551.31 What are the rules on suspension, termination, and denial of refunding of grants?

(a) The Chief Executive Officer or designee is authorized to suspend further payments or to terminate payments under any grant providing assistance under the Act whenever he/she determines there is a material failure to comply with applicable terms and conditions of the grant. The Chief Executive Officer shall prescribe procedures to insure that:

(1) Assistance under the Act shall not be suspended for failure to comply with applicable terms and conditions, except in emergency situations for thirty days;

(2) An application for refunding under the Act may not be denied unless the recipient has been given:

(i) Notice at least 75 days before the denial of such application of the possibility of such denial and the grounds for any such denial; and

(ii) Opportunity to show cause why such action should not be taken;

(3) In any case where an application for refunding is denied for failure to comply with the terms and conditions of the grant, the recipient shall be afforded and opportunity for an informal hearing before an impartial hearing officer, who has been agreed to by the recipient and the Corporation; and

(4) Assistance under the Act shall not be terminated for failure to comply with applicable terms and conditions unless the recipient has been afforded reasonable notice and opportunity for a full and fair hearing.

(b) In order to assure equal access to all recipients, such hearings or other meetings as may be necessary to fulfill the requirements of this section shall be held in locations convenient to the recipient agency.

(c) The procedures for suspension, termination, and denial of refunding, that apply to the Senior Companion Program are specified in 45 CFR Part 1206.

Subpart D—Senior Companion Eligibility, Status, and Cost Reimbursements

§ 2551.41 Who is eligible to be a Senior Companion?

(a) To be a Senior Companion an individual must:

(1) Be 60 years of age or older;

(2) Be determined by a physical examination to be capable, with or without reasonable accommodation of serving adults with special needs without detriment to either themselves or the adults served;

(3) Be able and available to perform service on a year round basis;

(4) Agree to abide by all requirements as set forth in this part; and

(5) In order to receive a stipend, have an income that is within the income eligibility guidelines specified in subpart D of this part.

(b) Eligibility to be a Senior Companion shall not be restricted on the basis of formal education, experience, race, religion, color, national origin, sex, age, handicap, or political affiliation.

§ 2551.42 What income guidelines govern eligibility to serve as a stipended Senior Companion?

(a) To be enrolled and receive a stipend, a Senior Companion cannot have an annual income from all sources, after deducting allowable medical expenses, which exceeds the program's income eligibility guideline for the state in which he or she resides. The income eligibility guideline for each state is the higher amount of either:

(1) 125 percent of the poverty line as set forth in 42 U.S.C. 9902 (2); or

(2) 135 percent of the poverty line, in those primary metropolitan statistical areas (PMSA), metropolitan statistical areas (MSA) and non-metropolitan counties identified by the Corporation as being higher in cost of living, as determined by application of the Volunteers in Service to America (VISTA) subsistence rates. In Alaska the guideline may be waived by the Corporation State Director if a project demonstrates that low-income individuals in that location are participating in the project.

(b) Annual income is counted for the past 12 months and includes the applicant or enrollee's income and that of his/her spouse, if the spouse lives in the same residence. Sponsors should also count the value of shelter, food, and clothing, if provided at no cost by persons related to the applicant, enrollee, or spouse.

(c) Allowable medical expenses are annual out-of-pocket medical expenses for health insurance premiums, health care services, and medications provided to the applicant, enrollee, or spouse which were not and will not be paid by Medicare, Medicaid, other insurance, or other third party payor, and which do not exceed 15 percent of the applicable income guideline.

(d) Applicants whose income is not more than 100 percent of the poverty line shall be given special consideration for enrollment.

(e) Once enrolled, a Senior Companion shall remain eligible to serve and to receive a stipend so long as his or her income, does not exceed the applicable income eligibility guideline by 20 percent.

§ 2551.43 What is considered income for determining volunteer eligibility?

(a) For determining eligibility, ''income'' refers to total cash receipts before taxes from all sources including:

(1) Money, wages, and salaries before any deduction, but not including food or rent in lieu of wages;

(2) Receipts from self-employment or from a farm or business after deductions for business or farm expenses;

(3) Regular payments for public assistance, Social Security, Unemployment or Workers Compensation, strike benefits, training stipends, alimony, child support, and military family allotments, or other regular support from an absent family member or someone not living in the household;

(4) Government employee pensions, private pensions, and regular insurance or annuity payments; and

(5) Income from dividends, interest, net rents, royalties, or income from estates and trusts.

(b) For eligibility purposes, income does not refer to the following money receipts:

(1) Any assets drawn down as withdrawals from a bank, sale of property, house or car, tax refunds, gifts, one-time insurance payments or compensation from injury;

(2) Non-cash income, such as the bonus value of food and fuel produced and consumed on farms and the imputed value of rent from owner-occupied farm or non-farm housing.

§ 2551.44 Is a Senior Companion a federal employee, an employee of the sponsor or of the volunteer station?

Senior Companions are volunteers, and are not employees of the sponsor, the volunteer station, the Corporation, or the Federal Government.

§ 2551.45 What cost reimbursements are provided to Senior Companions?

Cost reimbursements include:

(a) *Stipend.* A Senior Companion who is income eligible will receive a stipend in an amount determined by the Corporation and payable in regular installments, to enable them to serve without cost to themselves. The stipend is paid for the time Senior Companions spend with their assigned clients, for earned leave, and for attendance at official project events.

(1) Senior Companions who are income eligible and are related to each other are entitled to receive a stipend if they live in independent or separate households. One eligible member of a family from the same household is entitled to receive a stipend. Additional members from such families who are income eligible are entitled to other cost reimbursements payable from grant funds.

(2) Only in cases where Senior Companions or Foster Grandparents marry after enrollment in the program, may each continue to receive a stipend, provided that they remain income eligible.

(b) *Insurance.* A Senior Companion is provided with the Corporation-specified minimum levels of insurance as follows:

(1) *Accident insurance.* Accident insurance covers Senior Companions for personal injury during travel between their homes and places of assignment, during their volunteer service, during meal periods while serving as a volunteer, and while attending project-sponsored activities. Protection shall be provided against claims in excess of any benefits or services for medical care or treatment available to the volunteer from other sources.

(2) *Personal liability insurance.* Protection is provided against claims in excess of protection provided by other insurance. It does not include professional liability coverage.

(3) *Excess automobile liability insurance.* (i) For Senior Companions who drive in connection with their service, protection is provided against claims in excess of the greater of either:

(A) Liability insurance volunteers carry on their own automobiles; or

(B) The limits of applicable state financial responsibility law, or in its absence, levels of protection to be determined by the Corporation for each person, each accident, and for property damage.

(ii) Senior Companions who drive their personal vehicles to or on assignments or project-related activities must maintain personal automobile liability insurance equal to or exceeding the levels established by the Corporation.

(c) *Transportation.* Senior Companions may receive assistance with the cost of transportation to and from volunteer assignments and official project activities, including orientation, training, and recognition events.

(d) *Physical examination.* Senior Companions are provided a physical examination prior to assignment and annually thereafter, to ensure that they will be able to provide supportive service without injury to themselves or the clients served.

(e) *Meals and recognition.* Senior Companions are provided the following within limits of the project's available resources:

(1) Assistance with the cost of meals taken while on assignment; and

(2) Recognition for their service.

§ 2551.46 May the cost reimbursements of a Senior Companion be subject to any tax or charge, be treated as wages or compensation, or affect eligibility to receive assistance from other programs?

No. Senior Companion's cost reimbursements are not subject to any tax or charge or treated as wages or compensation for the purposes of unemployment insurance, worker's compensation, temporary disability, retirement, public assistance, or similar benefit payments or minimum wage laws. Cost reimbursements are not subject to garnishment and do not reduce or eliminate the level of, or eligibility for, assistance or services a Senior Companion may be receiving under any governmental program.

Subpart E—Senior Companion Terms of Service

§ 2551.51 What are the terms of service of a Senior Companion?

(a) A Senior Companion usually serves a total of twenty hours a week.

(b) Up to 20 percent of a project's budgeted Volunteer Service Years (VSYs) may support volunteers serving an average of 20 hours per week provided that the total for each volunteer is 80 hours for each four week period served. No volunteer covered by this provision shall serve less than two or more than eight hours per day.

(c) Senior Companion service shall not be performed in fewer than three days, or more than five days a week.

(d) A Senior Companion shall not serve more than 1044 hours per budget year.

§ 2551.52 Under what circumstances may a Senior Companion be allowed to serve a modified service schedule?

Senior Companions who have served at least ten years in the program, and are determined by a medical examination to have physical limitations that prevent them from meeting the terms of service specified in § 2551.51, may be allowed to serve a modified schedule of not less than 10 hours a week for a period not to exceed two years from the time such a determination is made.

§ 2551.53 What factors are considered in determining a Senior Companion's service schedule?

(a) Travel time between the Senior Companion's home and place of assignment is not part of the service schedule and is not stipended.

(b) Travel time between individual assignments is a part of the service schedule and is stipended.

(c) Meal time may be part of the service schedule and is stipended only if it is specified in the care plan as part of the service activity.

§ 2551.54 Under what circumstances may a Senior Companion's service be terminated?

(a) A sponsor may remove a Senior Companion from service for cause. Grounds for removal include but are not limited to: extensive and unauthorized absences; misconduct; inability to perform assignments; and failure to accept supervision. A Senior Companion may also be removed from service for having income in excess of the eligibility level.

(b) The sponsor shall establish appropriate policies on service termination as well as procedures for appeal from such adverse action.

§ 2551.55 Are Senior Companions eligible for leave?

(a) Senior Companions are provided a reasonable amount of stipended leave which cannot exceed four hours of annual, and two hours of sick leave, for each month of service under the terms specified in § 2551.51. Leave amounts should be adjusted for Senior Companions serving modified service schedules.

(b) Accrued stipended leave must be used within the budget period in which it was earned.

(c) Senior Companions unable to travel to assignments due to natural catastrophes or weather emergencies declared by appropriate authorities in the service area may be granted stipended leave for the duration of the emergency with proper documentation from the sponsor.

Subpart F—Responsibilities of a Volunteer Station

§ 2551.61 When may a sponsor serve as a volunteer station?

(a) A sponsor may function as a volunteer station if it is:

(1) A State organization administering a statewide Senior Companion project where the volunteer station is part of the State organization; or

(2) A Federal or State-recognized Indian tribal government.

(b) Other sponsors not included in the categories specified in paragraphs (a)(1) and (a)(2) of this section, can serve as a volunteer station provided that no more than 20 percent of its budgeted VSYs can be placed in programs administered by such sponsors.

§ 2551.62 What are the responsibilities of a volunteer station?

A volunteer station shall undertake the following responsibilities in support of Senior Companion volunteers:

(a) Develop volunteer assignments that meet the requirements specified in § 2551.71 through 2551.73 and regularly assess those assignments for continued appropriateness.

(b) Select eligible clients for assigned volunteers.

(c) Develop a written care plan for each client specifying the needs of the client and the role and activities of the Senior Companion in the delivery of required services.

(d) Obtain a Letter of Agreement for Senior Companions assigned in-home. In cases where the confidentiality of clients needs to be protected, a modified document that does not reveal client identities shall be used.

(e) Provide Senior Companions serving the station with:

(1) Orientation to the station and any in-service training necessary to enhance performance of assignments;

(2) Resources required for performance of assignments including reasonable accommodation; and

(3) Appropriate recognition.

(f) Designate a staff member to oversee fulfillment of station responsibilities and supervision of Senior Companions while on assignment.

(g) Keep records and prepare reports required by the sponsor.

(h) Provide for the safety of Senior Companions assigned to it.

(i) Comply with all applicable civil rights laws and regulations including reasonable accommodation for Senior Companions with disabilities.

(j) Undertake such other responsibilities as may be necessary to the successful performance of Senior Companions in their assignments or as agreed to in the Memorandum of Understanding.

Subpart G—Senior Companion Placements and Assignments

§ 2551.71 Must all Senior Companion placements be year-round?

Priority shall be given to volunteer stations that can place Senior Companions year round. If a volunteer station does not operate on a year-round basis, a sponsor shall develop alternate placements for the Senior Companions assigned to the volunteer station when it is not in operation.

§ 2551.72 What requirements govern the assignment of Senior Companions?

Senior Companion assignments shall:

(a) Provide for Senior Companions to give direct services to one or more eligible adults. Senior Companions cannot provide: services such as those performed by medical personnel, services to large numbers of clients, custodial services, handling a client's finances, administrative support services or other services that would detract from the person-to-person relationship.

(b) Result in person-to-person supportive relationships with each client served.

(c) Support the achievement and maintenance of the highest level of independent living for their clients.

(d) Be meaningful to the Senior Companion.

(e) Be supported by appropriate orientation, training and supervision.

§ 2551.73 Is a written care plan required for each volunteer station and what purpose does it serve?

(a) All Senior Companions shall receive a written care plan developed by the volunteer station that:

(1) Is approved by the sponsor and accepted by the Senior Companion;

(2) Identifies the individual clients to be served;

(3) Identifies each client's needs and the role and activities of the Senior Companion;

(4) Addresses the period of time each client should receive such services; and

(5) Is used to review the status of the Senior Companion's services in working with the assigned adult, as well as the impact of the assignment on the clients served.

(b) A generic care plan may be used in cases when client turnover occurs on a daily, or weekly basis, or when clients served suffer from identical or similar illnesses or disabilities.

Subpart H—Clients Served

§ 2551.81 What type of clients are eligible to be served?

Senior Companions serve only adults with special needs including: older persons requiring long term care, or those receiving home health care, nursing care, home delivered meals and other nutrition services; persons deinstitutionalized from mental hospitals, nursing homes and other institutions; and those having developmental disabilities.

Subpart I—Application and Fiscal Requirements

§ 2551.91 Application and award process.

(a) *How and when may an eligible organization apply for a grant?*

(1) An eligible organization may file an application for a grant at any time.

(2) Before submitting an application an applicant shall determine the availability of funds from the Corporation.

(3) The Corporation may also solicit grant applicants. Applicants solicited under this provision are not assured of selection or approval and may have to

compete with other solicited or unsolicited applications.

(b) *What must an eligible organization include in a grant application?*

(1) An applicant shall complete standard forms prescribed by the Corporation.

(2) The applicant shall comply with the provisions of Executive Order 12372, ''Intergovernmental Review of Federal Programs,'' (3 CFR, 1982 Comp., p.197) in 45 CFR part 1233 and any other applicable requirements.

(c) *Who reviews the merits of an application and how is a grant awarded?*

(1) The Corporation reviews and determines the merit of an application by its responsiveness to published guidelines and to the overall purpose and objectives of the program. When funds are available, the Corporation awards a grant in writing to each applicant whose grant proposal provides the best potential for serving the purpose of the program. The award will be documented by Notice of Grant Award (NGA).

(2) The Corporation and the sponsoring organization are the parties to the NGA. The NGA will document the sponsor's commitment to fulfill specific programmatic objectives and financial obligations. It will document the extent of the Corporation's obligation to provide financial support to the sponsor.

(d) *What happens if the Corporation rejects an application?* The Corporation will return to the applicant an application that is not approved for funding, with an explanation of the Corporation's decision.

(e) *For what period of time does the Corporation award a Senior Companion grant?* The Corporation awards a Senior Companion grant for a specified period that is usually 12 months in duration.

§ 2551.92 Project funding requirements.

(a) *Is non-Corporation support required?* A Corporation grant may be awarded to fund up to 90 percent of the cost of development and operation of a Senior Companion project. The sponsor is required to contribute at least 10 percent of the total project cost from non-Federal sources or authorized Federal sources.

(b) *Under what circumstances does the Corporation allow less than the 10 percent non-Corporation support?* The Corporation may allow exceptions to the 10 percent local support requirement in cases of demonstrated need such as:

(1) Initial difficulties in the development of local funding sources during the first three years of operations; or

(2) An economic downturn, the occurrence of a natural disaster, or similar events in the service area that severely restricts or reduces sources of local funding support; or

(3) The unexpected discontinuation of local support from one or more sources that a project has relied on for a period of years.

(c) *May the Corporation restrict how a sponsor uses locally generated contributions in excess of the 10 percent non-Corporation support required?* Whenever locally generated contributions to Senior Companion projects are in excess of the minimum 10 percent non-Corporation support required, the Corporation may not restrict the manner in which such contributions are expended provided such expenditures are consistent with the provisions of the Act.

(d) *Are program expenditures subject to audit?* All expenditures by the grantee of Federal and non-Federal funds, including expenditures from excess locally generated contributions in support of the grant are subject to audit by the Corporation, its Inspector General, or their authorized agents.

(e) *How are Senior Companion cost reimbursements budgeted?* The total of cost reimbursements for Senior Companions, including stipends, insurance, transportation, meals, physical examinations, and recognition, shall be a sum equal to at least 80 percent of the amount of the federal share of the grant award. Federal, required non-Federal, and excess non-federal resources can be used to make up the amount allotted for cost reimbursements.

(f) *May a sponsor pay stipends at a rate different than the rate established by the Corporation?* A sponsor shall pay stipends at the same rate as that established by the Corporation.

§ 2551.93 Grants management requirements.

What rules govern a sponsor's management of grants?

(a) A sponsor shall manage a grant in accordance with:

(1) The Act;

(2) Regulations in this part;

(3) 45 CFR Part 2541, ''Uniform Requirements for Grants and Cooperative Agreements with State and Local Governments'', or 45 CFR Part 2543, ''Grants and Agreements with Institutions of Higher Education, Hospitals, and Other Non-Profit Organizations'';

(4) The following OMB Circulars, as appropriate A–21, ''Cost Principles for Institutions of Higher Education'', A–87, ''Cost Principles for State and Local Governments'', A–122, ''Cost Principles for Non-Profit Organizations'', and A–133, ''Audits of Institutions of Higher Education and Other Non-Profit Organizations'' (OMB circulars are available at the following address: Office of Administration, Publications Office, 725-17th Street, NW, Room 2200, Washington, DC 20503.); and

(5) Other applicable Corporation requirements.

(b) Project support provided under a Corporation grant shall be furnished at the lowest possible cost consistent with the effective operation of the project.

(c) Project costs for which Corporation funds are budgeted must be justified as being necessary and essential to project operation.

(d) Other than reimbursement for meals during a normal meal period, project funds shall not be used to reimburse volunteers for expenses, including transportation costs, incurred while performing their volunteer assignments. Equipment or supplies for volunteers on assignment are not allowable costs. Assignment-related costs of transportation, equipment, supplies, etc. are the responsibility of the volunteer station or a third party, and are not an allowable grant cost.

(e) Volunteer expense items, including transportation, meals, recognition activities and items purchased at the volunteers' own expense and which are not reimbursed, are not allowable as contributions to the non-Federal share of the budget.

(f) Costs of other insurance not required by program policy, but maintained by a sponsor for the general conduct of its activities are allowable with the following limitations:

(1) Types and extent of and cost of coverage are according to sound institutional and business practices;

(2) Costs of insurance or a contribution to any reserve covering the risk of loss of or damage to Government-owned property are unallowable unless the government specifically requires and approves such costs; and

(3) The cost of insurance on the lives of officers, trustees or staff is unallowable except where such insurance is part of an employee plan which is not unduly restricted.

(g) Costs to bring a sponsor into basic compliance with accessibility requirements for individuals with disabilities are not allowable costs.

(h) Payments to settle discrimination allegations, either informally through a settlement agreement or formally as a result of a decision finding discrimination, are not allowable costs.

(i) Written Corporation approval/concurrence is required for the

following changes in the approved grant:

(1) Reduction in budgeted volunteer service years.

(2) Change in the service area.

(3) Transfer of budgeted line items from Volunteer Expenses to Support Expenses. This requirement does not apply if the 80 percent volunteer cost reimbursement ratio is maintained.

Subpart J—Non-Stipended Senior Companions.

§ 2551.101 What rule governs the recruitment and enrollment of persons who do not meet the income eligibility guidelines to serve as Senior Companions without stipends?

Over-income persons, age 60 or over, may be enrolled in SCP projects as non-stipended volunteers in communities where there is no RSVP project or where agreement is reached with the RSVP project that allows for the enrollment of non-stipended volunteers in the SCP project.

§ 2551.102 What are the conditions of service of non-stipended Senior Companions?

Non-stipended Senior Companions serve under the following conditions:

(a) They must not displace or prevent eligible low-income individuals from becoming Senior Companions.

(b) No special privilege or status is granted or created among Senior Companions, stipended or non-stipended, and equal treatment is required.

(c) Training, supervision, and other support services and cost reimbursements, other than the stipend, are available equally to all Senior Companions.

(d) All regulations and requirements applicable to the program, with the exception listed in paragraph (f) of this section, apply to all Senior Companions.

(e) Non-stipended Senior Companions may be placed in separate volunteer stations where warranted.

(f) Non-stipended Senior Companions will be encouraged but not required to serve 20 hours per week and 50 weeks per year. Senior Companions will maintain a close person-to-person relationship with their assigned special needs clients on a regular basis.

(g) Non-stipended Senior Companions may contribute the costs they incur in connection with their participation in the program. Such contributions are not counted as part of the required non-federal share of the grant but may be reflected in the budget column for non-federal resources.

§ 2551.103 Must a sponsor be required to enroll non-stipended Senior Companions?

Enrollment of non-stipended Senior Companions is not a factor in the award of new or renewal grants.

§ 2551.104 May Corporation funds be used for non-stipended Senior Companions?

Federally appropriated funds for SCP shall not be used to pay any cost, including any administrative cost, incurred in implementing the regulations in this part for non-stipended Senior Companions.

Subpart K—Non-Corporation Funded SCP Projects

§ 2551.111 Under what conditions can an agency or organization sponsor a Senior Companion project without Corporation funding?

An eligible agency or organization who wishes to sponsor a Senior Companion project without Corporation funding, must sign a Memorandum of Agreement with the Corporation that:

(a) Certifies its intent to comply with all Corporation requirements for the Senior Companion Program; and

(b) Identifies responsibilities to be carried out by each party.

§ 2551.112 What benefits are a non-Corporation funded project entitled to?

The Memorandum of Agreement entitles the sponsor of a non-Corporation funded project to:

(a) All technical assistance and materials provided to Corporation-funded Senior Companion projects; and

(b) The application of the provisions of Section 404(f)(1) and Section 418 of the Act.

§ 2551.113 What financial obligation does the Corporation incur for non-Corporation funded projects?

Entry into a Memorandum of Agreement with, or issuance of an NGA to a sponsor of non-Corporation funded project, does not create a financial obligation on the part of the Corporation for any costs associated with the project, including increases in required payments to Senior Companion's that may result from changes in the Act or in program regulations.

§ 2551.114 What happens if a non-Corporation funded sponsor does not comply with the Memorandum of Agreement?

A non-Corporation funded project sponsor's noncompliance with the Memorandum of Agreement shall result in suspension or termination of the Corporation's agreement and all benefits specified in § 2551.112.

Subpart L—Restrictions and Legal Representation

§ 2551.121 What legal limitations apply to the operation of the Senior Companion Program and to the expenditure of grant funds?

(a) *Political activities.* (1) No part of any grant shall be used to finance, directly or indirectly, any activity to influence the outcome of any election to public office, or any voter registration activity.

(2) No project shall be conducted in a manner involving the use of funds, the provision of services, or the employment or assignment of personnel in a matter supporting or resulting in the identification of such project with:

(i) Any partisan or nonpartisan political activity associated with a candidate, or contending faction or group, in an election; or

(ii) Any activity to provide voters or prospective voters with transportation to the polls or similar assistance in connection with any such election; or

(iii) Any voter registration activity, except that voter registration applications and nonpartisan voter registration information shall be made available to the public at the premises of the sponsor, but, in making such information available, employees of the sponsor shall not express preferences or seek to influence decisions concerning any candidate, political party, election issue, or voting decision.

(3) The sponsor shall not use grant funds in any activity for the purpose of influencing the passage or defeat of legislation or proposals by initiative petition, except:

(i) In any case in which a legislative body, a committee of a legislative body, or a member of a legislative body requests any volunteer in, or employee of such a program to draft, review or testify regarding measures or to make representation to such legislative body, committee or member; or

(ii) In connection with an authorization or appropriations measure directly affecting the operation of the Senior Companion Program.

(b) *Non-displacement of employed workers.* A Senior Companion shall not perform any service or duty or engage in any activity which would otherwise be performed by an employed worker or which would supplant the hiring of or result in the displacement of employed workers, or impair existing contracts for service.

(c) *Compensation for service.* (1) An agency or organization to which NSSC volunteers are assigned or which operates or supervises any NSSC program shall not request or receive any

compensation from NSSC volunteers or from beneficiaries for services of NSSC volunteers.

(2) This section does not prohibit a sponsor from soliciting and accepting voluntary contributions from the community at large to meet its local support obligations under the grant or from entering into agreements with parties other than beneficiaries to support additional volunteers beyond those supported by the Corporation grant.

(3) A Senior Companion volunteer station may contribute to the financial support of the Senior Companion Program. However, this support shall not be a required precondition for a potential station to obtain or retain Senior Companion service. If a volunteer station agrees to provide funds to support additional Senior Companions or pay for other Senior Companion support costs, the agreement shall be stated in a written memorandum of understanding.

(4) The sponsor shall withdraw services if the station's inability to provide monetary or in-kind support to the project diminishes or jeopardizes the project's financial capabilities to fulfill its obligations.

(5) Under no circumstances shall a Senior Companion receive a fee for service from service recipients, their legal guardian, members of their family, or friends.

(d) *Labor and anti-labor activity.* The sponsor shall not use grant funds directly or indirectly to finance labor or anti-labor organization or related activity.

(e) *Fair labor standards.* A sponsor that employs laborers and mechanics for construction, alteration, or repair of facilities shall pay wages at prevailing rates as determined by the Secretary of Labor in accordance with the Davis-Bacon Act, as amended.

(f) *Nondiscrimination.* A sponsor or sponsor employee shall not discriminate against a Senior Companion on the basis of race, color, national origin, sex, age, religion, or political affiliation, or on the basis of disability, if the Senior Companion with a disability is qualified to serve.

(g) *Religious activities.* A Senior Companion or a member of the project staff funded by the Corporation shall not give religious instruction, conduct worship services or engage in any form of proselytization as part of his or her duties.

(h) *Nepotism.* Persons selected for project staff positions shall not be related by blood or marriage to other project staff, sponsor staff or officers, or members of the sponsor Board of Directors, unless there is written concurrence from the community group established by the sponsor under Subpart B of this part and with notification to the Corporation.

§ 2551.122 What legal coverage does the Corporation make available to Senior Companions?

It is within the Corporation's discretion to determine if Counsel is employed and counsel fees, court costs, bail and other expenses incidental to the defense of a Senior Companion is paid in a criminal, civil or administrative proceeding, when such a proceeding arises directly out of performance of the Senior Companion's activities. The circumstances under which the Corporation shall pay such expenses are specified in 45 CFR part 1220.

Dated: August 25, 1998.

Thomas L. Bryant,

Acting General Counsel.

[FR Doc. 98–23300 Filed 9–2–98; 8:45 am]

BILLING CODE 6050–28–P

CORPORATION FOR NATIONAL AND COMMUNITY SERVICE

45 CFR Parts 1208 and 2552

RIN 3045–AA18

Foster Grandparent Program

AGENCY: Corporation for National and Community Service.

ACTION: Notice of proposed rulemaking.

SUMMARY: The Corporation for National and Community Service, (hereinafter the ''Corporation''), proposes to amend the regulations governing the administration of the Foster Grandparent Program (FGP). These amendments will: implement changes in the program's authorizing legislation; establish minimum program requirements with greater clarity; update program operations to make them responsive to changes that have occurred since the regulations were last published; consolidate requirements from outdated sources into one user friendly document; balance increased flexibility with increased responsibility and accountability at the local level; and incorporate new concepts of programming to highlight the accomplishments and impact of senior service.

The format used is designed to make the requirements easy for local sponsors and project managers to understand. It integrates related topics under one heading for easy reference.

Upon adoption, the proposed amendments will supersede the old ACTION regulation and FGP Operations Handbook 4405.90 dated January 1989.

DATES: Comments must be submitted on or before November 2, 1998.

ADDRESSES: Comments should be sent to the Corporation for National Service, Director, National Senior Service Corps, 1201 New York Avenue, N.W., Washington, D.C., 20525.

FOR FURTHER INFORMATION CONTACT: Rey Tejada at 202–606–5000 ext. 197.

SUPPLEMENTARY INFORMATION: The requirements governing the administration of FGP projects are currently embodied in two documents: 45 CFR Part 1208 which was last published in the **Federal Register** on June 10, 1983, and the FGP Operations Handbook. The proposed amendments will combine all minimum program requirements in one document to make it easier for interested parties to secure basic program information.

The proposed amendments include modifications to current program requirements including those applicable to: the responsibilities of a FGP sponsor, community participation in local project operations, full-time project director, volunteer income eligibility, volunteer service schedule, volunteer leave, client care plans, authority to approve grants, waiver of non-federal support, ratio of volunteer cost reimbursement, and compensation for service.

The proposed amendments also reflect changes in the program's administrative structure resulting from the merger of the former ACTION agency into the Corporation in April 1994.

Regulatory Flexibility Act and Unfunded Mandate Reform Act

The General Counsel, in accordance with the Regulatory Flexibility Act (5 U.S.C. 606(b)), has reviewed this regulation and by approving certifies that this proposed rule will not have a significant impact on small business entities.

Under the Unfunded Mandates Reform Act of 1995, the Corporation certifies that this proposed rule does not include any Federal mandate that may result in the expenditure by State, local, and tribal governments, in the aggregate, or by the private sector, of $100,000,000 or more (adjusted annually for inflation) in any one year.

Paperwork Reduction Act of 1995

These proposed regulations have been examined under the Paperwork Reduction Act of 1995 and have been found to contain no information collection requirements.

Intergovernmental Review

This program is subject to the requirements of Executive Order 12372. The objective of the Executive order is to foster an intergovernmental partnership and strengthened federalism by relying on processes developed by State and local governments for coordination and review of proposed Federal financial assistance. In accordance with the order, this document is intended to provide early notification of the Corporation's specific plans and actions for this program.

Executive Order 12866

This regulation has been drafted and reviewed in accordance with Executive Order 12866. The Office of Management and Budget has reviewed this rule and has determined that this rule is not a ''significant regulatory action'' under Executive Order 12866, section 3(f), Regulatory Planning and Review.

Participation in the Rulemaking

The FGP Program Council, a group established to provide advice to the Corporation on program related issues, was consulted, reviewed and gave recommendations on initial drafts of the proposed regulations. Council membership is comprised of FGP project staff and sponsor representatives, as well as selected staff from Corporation field offices. A similar opportunity was given to all Corporation field staff, a group that plays an important role in the implementation of program regulations.

DISTRIBUTION TABLE

Old 45 CFR Part 1208	New 45 CFR Part 2552
1208.1–1	2552.11
1208.2–1	2552.21
1208.3–1	2552.31
1208.4–1	2552.41
1208.5–1	2252.51
	2252.61
	2252.71
	2252.81
	2252.91
	2252.101
	2252.111
	2252.121

List of Subjects

45 CFR Part 1208

Aged, Grant programs—social programs, Reporting and recordkeeping requirements, Volunteers.

45 CFR Part 2552

Aged, Grant programs—social programs, Volunteers.

Accordingly, and under the authority of 42 U.S.C. 12501 *et seq.*, the Corporation proposes to amend 45 CFR chapters XII and XXV as follows:

PART 1208—[REDESIGNATED AS PART 2552]

1. Part 1208 in 45 CFR chapter XII is redesignated as part 2552 in 45 CFR chapter XXV and is revised to read as follows:

PART 2552—FOSTER GRANDPARENT PROGRAM

Subpart A—General

Sec.

2552.11 What is the Foster Grandparent Program?
2552.12 Definitions.

Subpart B—Eligibility and Responsibilities of a Sponsor

2552.21 Who is eligible to serve as a sponsor?
2552.22 What are the responsibilities of a sponsor?
2552.23 What are a sponsor's program responsibilities?
2552.24 What are a sponsor's responsibilities for securing community participation?
2552.25 What are a sponsor's administrative responsibilities?
2552.26 May a sponsor administer more than one program grant from the Corporation?

Subpart C—Suspension and Termination of Corporation Assistance

2552.31 What are the rules on suspension, termination, and denial of refunding of grants?

Subpart D—Foster Grandparent Eligibility, Status and Cost Reimbursements

2552.41 Who is eligible to be a Foster Grandparent?
2552.42 What income guidelines govern eligibility to serve as a stipended Foster Grandparent?
2552.43 What is considered income for determining volunteer eligibility?
2552.44 Is a Foster Grandparent a federal employee, an employee of the sponsor or of the volunteer station?
2552.45 What cost reimbursements are provided to Foster Grandparents?
2552.46 May the cost reimbursements of a Foster Grandparent be subject to any tax or charge, be treated as wages or compensation, or affect eligibility to receive assistance from other programs?

Subpart E—Foster Grandparent Terms of Service

2552.51 What are the terms of service of a Foster Grandparent?
2552.52 Under what circumstances may a Foster Grandparent be allowed to serve a modified service schedule?
2552.53 What factors are considered in determining a Foster Grandparent's service schedule?
2552.54 Under what circumstances may a Foster Grandparent's service be terminated?
2552.55 Are Foster Grandparents eligible for leave?

Subpart F—Responsibilities of a Volunteer Station

2552.61 When may a sponsor serve as a volunteer station?
2552.62 What are the responsibilities of a volunteer station?

Subpart G—Foster Grandparent Placements and Assignments

2552.71 What is the required minimum number of eligible children in a volunteer station?
2552.72 Must all Foster Grandparent placements be year-round?
2552.73 What requirements govern the assignment of Foster Grandparents?
2552.74 Is a written care plan required for each volunteer station and what purpose does it serve?

Subpart H—Children Served

2552.81 What type of children are eligible to be served?
2552.82 Under what circumstances may a Foster Grandparent continue to serve a child beyond his or her 21st birthday?

Subpart I—Application and Fiscal Requirements

2552.91 Application and award process.
2552.92 Project funding requirements.
2552.93 Grants management requirements.

Subpart J—Non-Stipended Foster Grandparents

2552.101 What rule governs the recruitment and enrollment of persons who do not meet the income eligibility guidelines to serve as Foster Grandparents without stipends?
2552.102 What are the conditions of service of non-stipended Foster Grandparents?
2552.103 Must a sponsor be required to enroll non-stipended Foster Grandparents?
2552.104 May Corporation funds be used for non-stipended Foster Grandparents?

Subpart K—Non-Corporation Funded FGP Projects

2552.111 Under what conditions can an agency or organization sponsor a Foster Grandparent project without Corporation funding?
2552.112 What benefits are a non-Corporation funded project entitled to?
2552.113 What financial obligation does the Corporation incur for non-Corporation funded projects?
2552.114 What happens if a non-Corporation funded sponsor does not comply with the Memorandum of Agreement?

Subpart L—Restrictions and Legal Representation

2552.121 What legal limitations apply to the operation of the Foster Grandparent Program and to the expenditure of grant funds?
2552.122 What legal coverage does the Corporation make available to Foster Grandparents ?

Authority: 42 U.S.C. 4950 *et seq.*, 5011.

Subpart A—General

§ 2552.11 What is the Foster Grandparent Program?

The Foster Grandparent Program provides grants to qualified agencies and organizations to engage older persons, particularly those with limited incomes, in volunteer service to meet critical community needs. Program funds are used to support Foster Grandparents in providing supportive, person to person service to children with exceptional or special needs. The program uses the skills and experiences of individuals age 60 and over as a resource to address local needs, and seeks to enrich the lives of older persons through their participation in community service.

§ 2552.12 Definitions.

(a) *Act.* The Domestic Volunteer Service Act of 1973 as amended, Pub. L. 93–113, Oct. 1, 1973, 87 Stat. 396, 42 U.S.C. 4950 *et seq.*

(b) *Adequate Staffing Level.* The number of project staff or full-time equivalent needed by a sponsor to manage NSSC project operations considering such factors as: number of budgeted volunteers/Volunteer Service Years (VSYs), number of volunteer stations, and the size of the service area.

(c) *Annual income.* Total cash receipts from all sources over the preceding 12 months including: the applicant or enrollee's income and, the applicant or enrollee's spouse's income, if the spouse lives in the same residence. The value of shelter, food, and clothing, may be counted if provided at no cost by persons related to the applicant/enrollee, or spouse.

(d) *Care plan.* A written description of a Foster Grandparent's assignment with a child. The plan defines the goals for the child to be attained through the relationship with a Foster Grandparent and the specific activities to be performed by the Foster Grandparent in the assignment.

(e) *Chief Executive Officer.* The Chief Executive Officer of the Corporation appointed under the Trust Act.

(f) *Child.* Any individual 21 years of age or under.

(g) *Children having exceptional needs.* Children who are developmentally disabled, such as those who are mentally retarded, autistic, have cerebral palsy or epilepsy or are visually impaired, speech impaired, hearing impaired, orthopedically impaired, have multiple disabilities, are emotionally disturbed or have a language disorder, specific learning disability or other significant health impairment. Existence of a child's exceptional need shall be verified by an appropriate professional, such as a physician, psychiatrist, psychologist, registered nurse or licensed practical nurse, speech therapist or educator before a Foster Grandparent is assigned to the child.

(h) *Children with special needs.* Children who are abused or neglected; in need of foster care; adjudicated youth; homeless youths; certain teen-age parents; and children in need of protective intervention in their homes. Existence of a child's special need shall be verified by an appropriate professional before a Foster Grandparent is assigned to the child.

(i) *Corporation.* The Corporation for National and Community Service established under the Trust Act. The Corporation is also sometimes referred to as ''CNCS''.

(j) *Cost Reimbursements.* Reimbursements provided to volunteers such as stipends to cover incidental costs, meals, and transportation, to enable them to serve without cost to themselves. Also included are the costs of annual physical examinations, volunteer insurance and recognition which are budgeted as Volunteer Expenses.

(k) *In-home.* The non-institutional assignment of a Foster Grandparent in a private residence or a foster home.

(l) *Letter of Agreement.* A written agreement between a volunteer station, the sponsor and the parent or persons legally responsible for the child served by the Foster Grandparent. It authorizes the assignment of a Foster Grandparent in the child's home, defines the Foster Grandparent's activities and delineates specific arrangements for supervision.

(m) *Memorandum of Understanding.* A written statement prepared and signed by the Foster Grandparent project sponsor and the volunteer station that identifies project requirements, working relationships and mutual responsibilities.

(n) *National Senior Service Corps (NSSC).* The collective name for the Foster Grandparent Program (FGP), the Retired and Senior Volunteer Program (RSVP), the Senior Companion Program (SCP), and Demonstration Programs established under Title II Parts A, B, C, and E, of the Act. NSSC is also referred to as the ''Senior Corps''.

(o) *Non-Corporation Support (Required).* The percentage share of non-Federal cash and in-kind contributions, required to be raised by the sponsor in support of the grant.

(p) *Non-Corporation Support (Excess).* The amount of non-Federal cash and in-kind contributions generated by a sponsor in excess of the required percentage.

(q) *Parent.* A natural parent or a person acting in place of a natural parent, such as a guardian, a child's natural grandparent, or a step-parent with whom the child lives. The term also includes otherwise unrelated individuals who are legally responsible for a child's welfare.

(r) *Project.* The locally planned and implemented Foster Grandparent Program activity or set of activities as agreed upon between a sponsor and the Corporation.

(s) *Qualified Individual With a Disability.* An individual with a disability who, with or without reasonable accommodation, can perform the essential functions of a volunteer position that such individual holds or desires. For purposes of the Americans With Disabilities Act, consideration shall be given to a sponsor's or volunteer station's judgment as to what functions of a volunteer position are essential. If a sponsor has prepared a written description before advertising or interviewing applicants for the position, the written description shall be considered evidence of the essential functions of the volunteer position. This definition includes an individual with a physical or mental impairment as defined in section 101(8) of the Americans With Disabilities Act of 1990 (42 U.S.C. 12111(8)).

(t) *Service Area.* The geographically defined area in which Foster Grandparents are recruited, enrolled, and placed on assignments.

(u) *Service Schedule.* A written delineation of the days and times a Foster Grandparent serves each week.

(v) *Sponsor.* A public agency or private nonprofit organization that is responsible for the operation of a Foster Grandparent project.

(w) *Stipend.* A payment to Foster Grandparents to enable them to serve without cost to themselves. The amount of the stipend is determined by the Corporation and is payable in regular installments. The minimum amount of the stipend is set by law and shall be adjusted by the CEO from time to time.

(x) *Trust Act.* The National and Community Service Trust Act of 1993,

Pub. L. 103–82, Sept. 21, 1993, 107 Stat. 785.

(y) *United States and States.* Each of the several States, the District of Columbia, the U.S. Virgin Islands, the Commonwealth of Puerto Rico, Guam and American Samoa, and Trust Territories of the Pacific Islands.

(z) *Volunteer Station.* A public agency, private nonprofit organization or proprietary health care agency or organization that accepts the responsibility for assignment and supervision of Foster Grandparents in health, education, social service or related settings such as private homes, hospitals, homes for dependent and neglected children, or similar establishments. Each volunteer station must be licensed or otherwise certified, when required, by the appropriate state or local government. Private homes are not volunteer stations.

Subpart B—Eligibility and Responsibilities of a Sponsor

§ 2552.21 Who is eligible to serve as a sponsor?

The Corporation awards grants to public agencies, including Indian tribes and non-profit private organizations, in the United States that have the authority to accept and the capability to administer a Foster Grandparent project.

§ 2552.22 What are the responsibilities of a sponsor?

A sponsor is responsible for fulfilling all project management requirements necessary to accomplish the purposes of the Foster Grandparent Program as specified in the Act. A sponsor shall not delegate or contract these responsibilities to another entity. A sponsor shall comply with all program regulations and policies, and grant provisions prescribed by the Corporation.

§ 2552.23 What are a sponsor's program responsibilities?

A sponsor shall:

(a) Focus Foster Grandparent resources on critical problems affecting children with special and exceptional needs within the project's service area.

(b) Assess on an ongoing basis or collaborate with other community organizations in the assessment of the needs of the client population in the community and develop strategies to respond to those needs using the resources of Foster Grandparents.

(c) Develop and manage a system of volunteer stations by:

(1) Ensuring that a volunteer station is a public or non-profit private organization, or an eligible proprietary health care agency, capable of serving as a volunteer station for the placement of Foster Grandparents;

(2) Ensuring that the placement of Foster Grandparents, will be governed by a Memorandum of Understanding:

(i) That is negotiated prior to placement;

(ii) That specifies the mutual responsibilities of the station and sponsor; and

(iii) That is renegotiated at least every three years;

(3) Reviewing volunteer placements regularly to ensure that clients are eligible to be served.

(d) Develop Foster Grandparent service opportunities to support locally-identified needs of eligible children in a way that consider the skills and experiences of Foster Grandparents.

(e) Consider the demographic make-up of the project service area in the enrollment of Foster Grandparents, taking special efforts to recruit eligible individuals from minority groups, persons with disabilities, and under-represented groups.

(f) Provide Foster Grandparents: with assignments that show direct and demonstrable benefits to the children and the community served, the Foster Grandparents, and the volunteer station; with required cost reimbursements specified in § 2552.45; with the opportunity to serve year-round; with not less than 40 hours of pre-service orientation and 4 hours of monthly in-service training.

(g) Encourage the most efficient and effective use of Foster Grandparents by coordinating project services and activities with related national, state and local programs, including other Corporation programs.

(h) Conduct an annual appraisal of volunteers' performance and annual review of their income eligibility.

(i) Develop, and regularly update, a strategic plan that includes the sponsor's vision and goals for the project.

(j) Develop, and annually update, a plan for promoting senior service within the project's service area.

(k) Annually assess the accomplishments and impact of the project on the identified needs and problems of the client population in the community.

(l) Establish written service policies for Foster Grandparents that include but are not limited to annual and sick leave, holidays, service schedules, termination, appeal procedures, meal and transportation reimbursements.

§ 2552.24 What are a sponsor's responsibilities for securing community participation?

(a) A sponsor shall secure community participation in local project operation by establishing an Advisory Council or a similar organizational structure with a membership that includes people:

(1) Knowledgeable of human and social needs of the community;

(2) Competent in the field of community service, volunteerism and children's issues;

(3) Capable of helping the sponsor meet its administrative and program responsibilities including fund-raising, publicity and programming for impact;

(4) With interest in and knowledge of the capability of older adults; and

(5) Of a diverse composition that reflects the demographics of the service area.

(b) The sponsor determines how such participation shall be secured consistent with the provisions of paragraphs (a)(1) through (a)(5) of this section.

§ 2552.25 What are a sponsor's administrative responsibilities?

A sponsor shall:

(a) Assume full responsibility for securing maximum and continuing community financial and in-kind support to operate the project successfully.

(b) Develop a written delegation of authority that carefully defines and clearly delineates project roles and responsibilities retained by the sponsor from those delegated to project staff.

(c) Provide levels of staffing and resources appropriate to accomplish the purposes of the project and carry out those project management responsibilities outlined in the above mentioned delegation of authority and provide necessary administrative support to such project staff.

(d) Employ a full-time project director to accomplish program objectives and manage the functions and activities delegated to project staff for NSSC program(s) within its control. A full-time project director shall not serve concurrently in another capacity, paid or unpaid, during established working hours. The project director may participate in activities to coordinate program resources with those of related local agencies, boards or organizations. A sponsor may negotiate the employment of a part-time project director with the Corporation when it can justify that such an arrangement will result in cost savings applied proportionately to both federal and non-federal funds without adversely affecting the size, scope, and quality of project operations.

(e) Consider all project staff as sponsor employees subject to its personnel policies and procedures.

(f) Compensate project staff at a level that is comparable with other similar staff positions in the sponsor organization and/or project service area.

(g) Establish risk management policies and procedures covering project and Foster Grandparent activities. This includes provision of appropriate insurance coverage for Foster Grandparents, vehicles and other properties used in the project.

(h) Establish record keeping/reporting systems in compliance with Corporation requirements that ensure quality of program and fiscal operations, facilitate timely and accurate submission of required reports; and cooperate with Corporation evaluation and data collection efforts.

(i) Comply with and ensure that all volunteer stations comply with, all applicable civil rights laws and regulations, including providing reasonable accommodation to qualified individuals with disabilities.

§ 2552.26 May a sponsor administer more than one program grant from the Corporation?

A sponsor may administer more than one Corporation program grant.

Subpart C—Suspension and Termination of Corporation Assistance

§ 2552.31 What are the rules on suspension, termination, and denial of refunding of grants?

(a) The Chief Executive Officer or designee is authorized to suspend further payments or to terminate payments under any grant providing assistance under the Act whenever he/she determines there is a material failure to comply with applicable terms and conditions of the grant. The Chief Executive Officer shall prescribe procedures to ensure that:

(1) Assistance under the Act shall not be suspended for failure to comply with applicable terms and conditions, except in emergency situations for thirty days;

(2) An application for refunding under the Act may not be denied unless the recipient has been given:

(i) Notice at least 75 days before the denial of such application of the possibility of such denial and the grounds for any such denial; and

(ii) Opportunity to show cause why such action should not be taken;

(3) In any case where an application for refunding is denied for failure to comply with the terms and conditions of the grant, the recipient shall be afforded an opportunity for an informal hearing before an impartial hearing officer, who has been agreed to by the recipient and the Corporation; and

(4) Assistance under the Act shall not be terminated for failure to comply with applicable terms and conditions unless the recipient has been afforded reasonable notice and opportunity for a full and fair hearing.

(b) In order to assure equal access to all recipients, such hearings or other meetings as may be necessary to fulfill the requirements of this section shall be held in locations convenient to the recipient agency.

(c) The procedures for suspension, termination, and denial of refunding, that apply to the Foster Grandparent Program are specified in 45 CFR part 1206.

Subpart D—Foster Grandparent Eligibility, Status and Cost Reimbursements

§ 2552.41 Who is eligible to be a Foster Grandparent?

(a) To be a Foster Grandparent an individual must:

(1) Be 60 years of age or older;

(2) Be determined by a physical examination to be capable, with or without reasonable accommodation of serving children with exceptional or special needs without detriment to either themselves or the children served;

(3) Be able and available to perform service on a year round basis;

(4) Agree to abide by all requirements as set forth in this part; and

(5) In order to receive a stipend, have an income that is within the income eligibility guidelines specified in this subpart.

(b) Eligibility to be a Foster Grandparent shall not be restricted on the basis of formal education, experience, race, religion, color, national origin, sex, age, handicap, or political affiliation.

§ 2552.42 What income guidelines govern eligibility to serve as a stipended Foster Grandparent?

(a) To be enrolled and receive a stipend, a Foster Grandparent cannot have an annual income from all sources, after deducting allowable medical expenses, which exceeds the program's income eligibility guideline for the state in which he or she resides. The income eligibility guideline for each state is the higher amount of either:

(1) 125 percent of the poverty line as set forth in 42 U.S.C. 9902 (2); or

(2) 135 percent of the poverty line, in those primary metropolitan statistical areas (PMSA), metropolitan statistical areas (MSA) and non-metropolitan counties identified by the Corporation as being higher in cost of living, as determined by application of the Volunteers in Service to America (VISTA) subsistence rates. In Alaska the guideline may be waived by the Corporation State Director if a project demonstrates that low-income individuals in that location are participating in the project.

(b) Annual income is counted for the past 12 months and includes the applicant or enrollee's income and that of his/her spouse, if the spouse lives in the same residence. Sponsors should also count the value of shelter, food, and clothing, if provided at no cost by persons related to the applicant, enrollee, or spouse.

(c) Allowable medical expenses are annual out-of-pocket medical expenses for health insurance premiums, health care services, and medications provided to the applicant, enrollee, or spouse which were not and will not be paid by Medicare, Medicaid, other insurance, or other third party pay or, and which do not exceed 15 percent of the applicable income guideline.

(d) Applicants whose income is not more than 100 percent of the poverty line shall be given special consideration for enrollment.

(e) Once enrolled, a Foster Grandparent shall remain eligible to serve and to receive a stipend so long as his or her income, does not exceed the applicable income eligibility guideline by 20 percent.

§ 2552.43 What is considered income for determining volunteer eligibility?

(a) For determining eligibility, ''income'' refers to total cash receipts before taxes from all sources including:

(1) Money, wages, and salaries before any deduction, but not including food or rent in lieu of wages;

(2) Receipts from self-employment or from a farm or business after deductions for business or farm expenses;

(3) Regular payments for public assistance, Social Security, Unemployment or Workers Compensation, strike benefits, training stipends, alimony, child support, and military family allotments, or other regular support from an absent family member or someone not living in the household;

(4) Government employee pensions, private pensions, and regular insurance or annuity payments; and

(5) Income from dividends, interest, net rents, royalties, or income from estates and trusts.

(b) For eligibility purposes, income does not refer to the following money receipts:

(1) Any assets drawn down as withdrawals from a bank, sale of

property, house or car, tax refunds, gifts, one-time insurance payments or compensation from injury.

(2) Non-cash income, such as the bonus value of food and fuel produced and consumed on farms and the imputed value of rent from owner-occupied farm or non-farm housing.

§ 2552.44 Is a Foster Grandparent a federal employee, an employee of the sponsor or of the volunteer station?

Foster Grandparents are volunteers, and are not employees of the sponsor, the volunteer station, the Corporation, or the Federal Government.

§ 2552.45 What cost reimbursements are provided to Foster Grandparents?

Cost reimbursements include:

(a) *Stipend.* A Foster Grandparent who is income eligible will receive a stipend in an amount determined by the Corporation and payable in regular installments, to enable them to serve without cost to themselves. The stipend is paid for the time Foster Grandparents spend with their assigned children, for earned leave, and for attendance at official project events.

(1) Foster Grandparents who are income eligible and are related to each other are entitled to receive a stipend if they live in independent or separate households. One eligible member of a family from the same household is entitled to receive a stipend. Additional members from such families who are income eligible are entitled to other cost reimbursements payable from grant funds.

(2) Only in cases where Foster Grandparents or Senior Companions marry after enrollment in the program, may each continue to receive a stipend, provided that they remain income eligible.

(b) *Insurance.* A Foster Grandparent is provided with the Corporation-specified minimum levels of insurance as follows:

(1) *Accident Insurance.* Accident insurance covers Foster Grandparents for personal injury during travel between their homes and places of assignment, during their volunteer service, during meal periods while serving as a volunteer, and while attending project-sponsored activities. Protection shall be provided against claims in excess of any benefits or services for medical care or treatment available to the volunteer from other sources.

(2) *Personal liability Insurance.* Protection is provided against claims in excess of protection provided by other insurance. It does not include professional liability coverage.

(3) *Excess automobile liability Insurance.* (i) For Foster Grandparents who drive in connection with their service, protection is provided against claims in excess of the greater of either:

(A) Liability insurance volunteers carry on their own automobiles; or

(B) The limits of applicable state financial responsibility law, or in its absence, levels of protection to be determined by the Corporation for each person, each accident, and for property damage.

(ii) Foster Grandparents who drive their personal vehicles to or on assignments or project-related activities shall maintain personal automobile liability insurance equal to or exceeding the levels established by the Corporation.

(c) *Transportation.* Foster Grandparents may receive assistance with the cost of transportation to and from volunteer assignments and official project activities, including orientation, training, and recognition events.

(d) *Physical examination.* Foster Grandparents are provided a physical examination prior to assignment and annually thereafter; to ensure that they will be able to provide supportive service without injury to themselves or the children served.

(e) *Meals and recognition.* Foster Grandparents are provided the following within limits of the project's available resources:

(1) Assistance with the cost of meals taken while on assignment; and

(2) Recognition for their service.

§ 2552.46 May the cost reimbursements of a Foster Grandparent be subject to any tax or charge, be treated as wages or compensation, or affect eligibility to receive assistance from other programs?

No. Foster Grandparent's cost reimbursements are not subject to any tax or charge or treated as wages or compensation for the purposes of unemployment insurance, worker's compensation, temporary disability, retirement, public assistance, or similar benefit payments or minimum wage laws. Cost reimbursements are not subject to garnishment, and do not reduce or eliminate the level of, or eligibility for, assistance or services a Foster Grandparent may be receiving under any governmental program.

Subpart E—Foster Grandparent Terms of Service

§ 2552.51 What are the terms of service of a Foster Grandparent?

(a) A Foster Grandparent usually serves a total of twenty hours a week.

(b) Up to 20 percent of a project's budgeted Volunteer Service Years (VSYs) may support volunteers serving an average of 20 hours per week provided that the total for each volunteer is 80 hours for each four week period served. No volunteer covered by this provision shall serve less than two or more than eight hours per day.

(c) Foster Grandparent service shall not be performed in fewer than three days, or more than five days a week.

(d) A Foster Grandparent shall not serve more than 1044 hours per budget year.

§ 2552.52 Under what circumstances may a Foster Grandparent be allowed to serve a modified service schedule?

Foster Grandparents who have served at least ten years in the program, and are determined by a medical examination to have physical limitations that prevent them from meeting the terms of service specified in § 2552.51 may be allowed to serve a modified schedule of not less than 10 hours a week for a period not to exceed two years from the time such a determination is made.

§ 2552.53 What factors are considered in determining a Foster Grandparent's service schedule?

(a) Travel time between the Foster Grandparent's home and place of assignment is not part of the service schedule and is not stipended.

(b) Travel time between individual assignments is a part of the service schedule and is stipended.

(c) Meal time may be part of the service schedule and is stipended only if it is specified in the care plan as part of the service activity.

§ 2552.54 Under what circumstances may a Foster Grandparent's service be terminated?

(a) A sponsor may remove a Foster Grandparent from service for cause. Grounds for removal include but are not limited to: extensive and unauthorized absences; misconduct; inability to perform assignments; and failure to accept supervision. A Foster Grandparent may also be removed from service for having income in excess of the eligibility level.

(b) The sponsor shall establish appropriate policies on service termination as well as procedures for appeal from such adverse action.

§ 2552.55 Are Foster Grandparents eligible for leave?

(a) Foster Grandparents are provided a reasonable amount of stipended leave which cannot exceed four hours of annual, and two hours of sick leave, for each month of service under the terms specified in § 2552.51. Leave amounts should be adjusted for Foster Grandparents serving modified service schedules.

(b) Accrued stipended leave must be used within the budget period in which it was earned.

(c) Foster Grandparents unable to travel to assignments due to natural catastrophes or weather emergencies declared by appropriate authorities in the service area may be granted stipended leave for the duration of the emergency with proper documentation from the sponsor.

Subpart F—Responsibilities of a Volunteer Station

§ 2552.61 When may a sponsor serve as a volunteer station?

(a) A sponsor may function as a volunteer station if it is:

(1) A State organization administering a statewide Foster Grandparent project where the volunteer station is part of the State organization; or

(2) A Federal or State-recognized Indian tribal government.

(b) Other sponsors not included in the categories specified in paragraphs (a)(1) and (a)(2) of this section, can serve as a volunteer station provided that no more than 20 percent of its budgeted VSYs can be placed in programs administered by such sponsors.

§ 2552.62 What are the responsibilities of a volunteer station?

A volunteer station shall undertake the following responsibilities in support of Foster Grandparent volunteers:

(a) Develop volunteer assignments that meet the requirements specified in §§ 2552.71 through 2552.74 and regularly assess those assignments for continued appropriateness.

(b) Select eligible children for assigned volunteers.

(c) Develop a written care plan for each child specifying the needs of the child and the role and activities of the Foster Grandparent.

(d) Obtain a Letter of Agreement for Foster Grandparents assigned in-home. In cases where the confidentiality of clients needs to be protected, a modified document that does not reveal client identities shall be used.

(e) Provide Foster Grandparents serving the station with:

(1) Orientation to the station and any in-service training necessary to enhance performance of assignments;

(2) Resources required for performance of assignments including reasonable accommodation; and

(3) Appropriate recognition.

(f) Designate a staff member to oversee fulfillment of station responsibilities and supervision of Foster Grandparents while on assignment.

(g) Keep records and prepare reports required by the sponsor.

(h) Provide for the safety of Foster Grandparents assigned to it.

(i) Comply with all applicable civil rights laws and regulations including reasonable accommodation for Foster Grandparents with disabilities.

(j) Undertake such other responsibilities as may be necessary to the successful performance of Foster Grandparents in their assignments or as agreed to in the Memorandum of Understanding.

Subpart G—Foster Grandparent Placements and Assignments

§ 2552.71 What is the required minimum number of eligible children in a volunteer station?

A volunteer station must have a minimum of four eligible children with critical priority needs to accommodate the services of two or more Foster Grandparents.

§ 2552.72 Must all Foster Grandparent placements be year-round?

Priority shall be given to volunteer stations that can place Foster Grandparents year round. If a volunteer station does not operate on a year-round basis, a sponsor shall develop alternate placements for the Foster Grandparents assigned to the volunteer station when it is not in operation.

§ 2552.73 What requirements govern the assignment of Foster Grandparents?

Foster Grandparent assignments shall:

(a) Provide for Foster Grandparents to give direct services to one or more eligible children. Foster Grandparents cannot be assigned to roles such as teacher's aides, group leaders or other similar positions that would detract from the person-to-person relationship.

(b) Result in person-to-person supportive relationships with each child served.

(c) Support the development and growth of each child served.

(d) Be meaningful to the Foster Grandparent.

(e) Be supported by appropriate orientation, training and supervision.

§ 2552.74 Is a written care plan required for each volunteer station and what purpose does it serve?

(a) All Foster Grandparents shall receive a written care plan developed by the volunteer station that:

(1) Is approved by the sponsor and accepted by the Foster Grandparent;

(2) Identifies the individual child(ren) to be served;

(3) Identifies each child's needs and the role and activities of the Foster Grandparent;

(4) Addresses the period of time each child should receive such services; and

(5) Is used to review the status of the Foster Grandparent's services in working with the assigned child, as well as the impact of the assignment on the child's development.

(b) A generic care plan may be used in cases when client turnover occurs on a daily, or weekly basis, or when clients served suffer from identical or similar illnesses or disabilities.

Subpart H—Children Served

§ 2552.81 What type of children are eligible to be served?

Foster Grandparents serve only children and youth with special and exceptional needs who are 21 years of age or under.

§ 2552.82 Under what circumstances may a Foster Grandparent continue to serve a child beyond his or her 21st birthday?

(a) Only when a Foster Grandparent has been assigned to, and has developed a relationship with, a mentally retarded child, that assignment may continue beyond the child's 21st birthday, provided that:

(1) Such child was receiving such services prior to attaining the chronological age of 21, and the continuation of service is in the best interest of the child; and

(2) The sponsor determines that it is in the best interest of both the Foster Grandparent and the child for the assignment to continue. Such a determination will be made through mutual agreement by all parties involved in the provision of services to the child served.

(b) In cases where the assigned Foster Grandparent becomes unavailable to serve a particular child, the sponsor may select another Foster Grandparent to continue the service.

(c) The sponsor may terminate service to a mentally retarded child over age 21, if it determines that such service is no longer in the best interest of either the Foster Grandparent or the child served.

Subpart I—Application and Fiscal Requirements

§ 2552.91 Application and award process.

(a) *How and when may an eligible organization apply for a grant*?

(1) An eligible organization may file an application for a grant at any time.

(2) Before submitting an application an applicant shall determine the availability of funds from the Corporation.

(3) The Corporation may also solicit grants. Applicants solicited under this provision are not assured of selection or approval and may have to compete with

other solicited or unsolicited applications.

(b) *What must an eligible organization include in a grant application*?

(1) An applicant shall complete standard forms prescribed by the Corporation.

(2) The applicant shall comply with the provisions of Executive Order 12372 ''Intergovernmental Review of Federal Programs,'' (3 CFR, 1982 Comp., p.197) in 45 CFR Part 1233, and any other applicable requirements.

(c) *Who reviews the merits of an application and how is a grant awarded*?

(1) The Corporation reviews and determines the merit of an application by its responsiveness to published guidelines and to the overall purpose and objectives of the program. When funds are available, the Corporation awards a grant in writing to each applicant whose grant proposal provides the best potential for serving the purpose of the program. The award will be documented by Notice of Grant Award (NGA).

(2) The Corporation and the sponsoring organization are the parties to the NGA. The NGA will document the sponsor's commitment to fulfill specific programmatic objectives and financial obligations. It will document the extent of the Corporation's obligation to provide financial support to the sponsor.

(d) *What happens if the Corporation rejects an application*? The Corporation will return an application that is not approved for funding to the applicant with an explanation of the Corporation's decision.

(e) *For what period of time does the Corporation award a grant?* The Corporation awards a Foster Grandparent grant for a specified period that is usually 12 months in duration.

§ 2552.92 Project funding requirements.

(a) *Is non-Corporation support required*? A Corporation grant may be awarded to fund up to 90 percent of the cost of development and operation of a Foster Grandparent project. The sponsor is required to contribute at least 10 percent of the total project cost from non-Federal sources or authorized Federal sources.

(b) *Under what circumstances does the Corporation allow less than the 10 percent non-Corporation support*? The Corporation may allow exceptions to the 10 percent local support requirement in cases of demonstrated need such as:

(1) Initial difficulties in the development of local funding sources during the first three years of operations; or

(2) An economic downturn, the occurrence of a natural disaster, or similar events in the service area that severely restricts or reduces sources of local funding support; or

(3) The unexpected discontinuation of local support from one or more sources that a project has relied on for a period of years.

(c) *May the Corporation restrict how a sponsor uses locally generated contributions in excess of the 10 percent non-Corporation support required*? Whenever locally generated contributions to Foster Grandparent projects are in excess of the minimum 10 percent non-Corporation support required, the Corporation may not restrict the manner in which such contributions are expended provided such expenditures are consistent with the provisions of the Act.

(d) *Are program expenditures subject to audit*? All expenditures by the grantee of Federal and non-Federal funds, including expenditures from excess locally generated contributions in support of the grant, are subject to audit by the Corporation, its Inspector General or their authorized agents.

(e) *How are Foster Grandparent cost reimbursements budgeted*? The total of cost reimbursements for Foster Grandparents, including stipends, insurance, transportation, meals, physical examinations, and recognition, shall be a sum equal to at least 80 percent of the amount of the federal share of the grant award. Federal, required and excess non-Corporation resources can be used to make up the amount allotted for cost reimbursements.

(f) *May a sponsor pay stipends at a rate different than the rate established by the Corporation*? A sponsor shall pay stipends at the same rate as that established by the Corporation.

§ 2552.93 Grants management requirements.

What rules govern a sponsor's management of grants?

(a) A sponsor shall manage a grant awarded in accordance with:

(1) The Act;

(2) Regulations in this part;

(3) 45 CFR Part 2541, ''Uniform Requirements for Grants and Cooperative Agreements with State and Local Governments'', or 45 CFR Part 2543, ''Grants and Agreements with Institutions of Higher Education, Hospitals, and Other Non-Profit Organizations';

(4) The following OMB Circulars, as appropriate A–21, ''Cost Principles for Institutions of Higher Education'', A–87, ''Cost Principles for State and Local Governments'', A–122, ''Cost Principles for Non-Profit Organizations'', and A–133, ''Audits of Institutions of Higher Education and Other Non-Profit Organizations'' (OMB circulars are available at the following address: Office of Administration, Publication Office, 725 17th Street, N.W., Room 2200, Washington, D.C. 20503.); and

(5) Other applicable Corporation requirements.

(b) Project support provided under a Corporation grant shall be furnished at the lowest possible cost consistent with the effective operation of the project.

(c) Project costs for which Corporation funds are budgeted must be justified as being necessary and essential to project operation.

(d) Other than reimbursement for meals during a normal meal period, project funds shall not be used to reimburse volunteers for expenses, including transportation costs, incurred while performing their volunteer assignments. Equipment or supplies for volunteers on assignment are not allowable costs. Assignment-related costs of transportation, equipment, supplies, etc. are the responsibility of the volunteer station or a third party, and are not an allowable grant cost.

(e) Volunteer expense items, including transportation, meals, recognition activities and items purchased at the volunteers' own expense and which are not reimbursed, are not allowable as contributions to the non-Federal share of the budget.

(f) Costs of other insurance not required by program policy, but maintained by a sponsor for the general conduct of its activities are allowable with the following limitations:

(1) Types and extent of and cost of coverage are according to sound institutional and business practices;

(2) Costs of insurance or a contribution to any reserve covering the risk of loss of or damage to Government-owned property are unallowable unless the government specifically requires and approves such costs; and

(3) The cost of insurance on the lives of officers, trustees or staff is unallowable except where such insurance is part of an employee plan which is not unduly restricted.

(g) Costs to bring a sponsor into basic compliance with accessibility requirements for individuals with disabilities are not allowable costs.

(h) Payments to settle discrimination allegations, either informally through a settlement agreement or formally as a result of a decision finding discrimination, are not allowable costs.

(i) Written Corporation approval/concurrence is required for the

following changes in the approved grant:

(1) Reduction in budgeted volunteer service years.

(2) Change in the service area.

(3) Transfer of budgeted line items from Volunteer Expenses to Support Expenses. This requirement does not apply if the 80 percent volunteer cost reimbursement ratio is maintained.

Subpart J—Non-Stipended Foster Grandparents

§ 2552.101 What rule governs the recruitment and enrollment of persons who do not meet the income eligibility guidelines to serve as Foster Grandparents without stipends?

Over-income persons, age 60 or over, may be enrolled in FGP projects as non-stipended volunteers in communities where there is no RSVP project or where agreement is reached with the RSVP project that allows for the enrollment of non-stipended volunteers in the FGP project.

§ 2552.102 What are the conditions of service of non-stipended Foster Grandparents?

Non-stipended Foster Grandparents serve under the following conditions:

(a) They must not displace or prevent eligible low-income individuals from becoming Foster Grandparents.

(b) No special privilege or status is granted or created among Foster Grandparents, stipended or non-stipended, and equal treatment is required.

(c) Training, supervision, and other support services and cost reimbursements, other than the stipend, are available equally to all Foster Grandparents.

(d) All regulations and requirements applicable to the program, with the exception listed in paragraph (f) of this section, apply to all Foster Grandparents.

(e) Non-stipended Foster Grandparents may be placed in separate volunteer stations where warranted.

(f) Non-stipended Foster Grandparents will be encouraged but not required to serve 20 hours per week and 50 weeks per year. Foster Grandparents will maintain a close person-to-person relationship with their assigned children on a regular basis.

(g) Non-stipended Foster Grandparents may contribute the costs they incur in connection with their participation in the program. Such contributions are not counted as part of the required non-federal share of the grant but may be reflected in the budget column for excess non-federal resources.

§ 2552.103 Must a sponsor be required to enroll non-stipended Foster Grandparents?

Enrollment of non-stipended Foster Grandparents is not a factor in the award of new or renewal grants.

§ 2552.104 May Corporation funds be used for non-stipended Foster Grandparents?

Federally appropriated funds for FGP shall not be used to pay any cost, including any administrative cost, incurred in implementing the regulations in this part for non-stipended Foster Grandparents.

Subpart K—Non-Corporation Funded FGP Projects

§ 2552.111 Under what conditions can an agency or organization sponsor a Foster Grandparent project without Corporation funding?

An eligible agency or organization who wishes to sponsor a Foster Grandparent project without Corporation funding, must sign a Memorandum of Agreement with the Corporation that:

(a) Certifies its intent to comply with all Corporation requirements for the Foster Grandparent Program; and

(b) Identifies responsibilities to be carried out by each party.

§ 2552.112 What benefits are a non-Corporation funded project entitled to?

The Memorandum of Agreement entitles the sponsor of a non-Corporation funded project to:

(a) All technical assistance and materials provided to Corporation-funded Foster Grandparent projects; and

(b) The application of the provisions of Section 404 (f)(1) and Section 418 of the Act.

§ 2552.113 What financial obligation does the Corporation incur for non-Corporation funded projects?

Entry into a Memorandum of Agreement with, or issuance of an NGA to an sponsor of non-Corporation funded project, does not create a financial obligation on the part of the Corporation for any costs associated with the project, including increases in required payments to Foster Grandparents that may result from changes in the Act or in program regulations.

§ 2552.114 What happens if a non-Corporation funded sponsor does not comply with the Memorandum of Agreement?

A non-Corporation funded project sponsor's noncompliance with the Memorandum of Agreement shall result in suspension or termination of the Corporation's agreement and all benefits specified in § 2552.112.

Subpart L—Restrictions and Legal Representation

§ 2552.121 What legal limitations apply to the operation of the Foster Grandparent Program and to the expenditure of grant funds?

(a) *Political activities.* (1) No part of any grant shall be used to finance, directly or indirectly, any activity to influence the outcome of any election to public office, or any voter registration activity.

(2) No project shall be conducted in a manner involving the use of funds, the provision of services, or the employment or assignment of personnel in a matter supporting or resulting in the identification of such project with:

(i) Any partisan or nonpartisan political activity associated with a candidate, or contending faction or group, in an election; or

(ii) Any activity to provide voters or prospective voters with transportation to the polls or similar assistance in connection with any such election; or

(iii) Any voter registration activity, except that voter registration applications and nonpartisan voter registration information may be made available to the public at the premises of the sponsor, but, in making such information available, employees of the sponsor shall not express preferences or seek to influence decisions concerning any candidate, political party, election issue, or voting decision.

(3) The sponsor shall not use grant funds in any activity for the purpose of influencing the passage or defeat of legislation or proposals by initiative petition, except:

(i) In any case in which a legislative body, a committee of a legislative body, or a member of a legislative body requests any volunteer in, or employee of such a program to draft, review or testify regarding measures or to make representation to such legislative body, committee or member; or

(ii) In connection with an authorization or appropriations measure directly affecting the operation of the Foster Grandparent Program.

(b) *Non-displacement of employed workers.* A Foster Grandparent shall not perform any service or duty or engage in any activity which would otherwise be performed by an employed worker or which would supplant the hiring of or result in the displacement of employed workers, or impair existing contracts for service.

(c) *Compensation for service.* (1) An agency or organization to which NSSC volunteers are assigned, or which operates or supervises any NSSC program shall not request or receive any

compensation from NSSC volunteers or from beneficiaries for services of NSSC volunteers.

(2) This section does not prohibit a sponsor from soliciting and accepting voluntary contributions from the community at large to meet its local support obligations under the grant or from entering into agreements with parties other than beneficiaries to support additional volunteers beyond those supported by the Corporation grant.

(3) A Foster Grandparent volunteer station may contribute to the financial support of the Foster Grandparent Program. However, this support shall not be a required precondition for a potential station to obtain or retain Foster Grandparent service. If a volunteer station agrees to provide funds to support additional Foster Grandparents or pay for other Foster Grandparent support costs, the agreement shall be stated in a written memorandum of understanding.

(4) The sponsor shall withdraw services if the station's inability to provide monetary or in-kind support to the project diminishes or jeopardizes the project's financial capabilities to fulfill its obligations.

(5) Under no circumstances shall a Foster Grandparent receive a fee for service from service recipients, their legal guardian, members of their family, or friends.

(d) *Labor and anti-labor activity.* The sponsor shall not use grant funds directly or indirectly to finance labor or anti-labor organization or related activity.

(e) *Fair labor standards.* A sponsor that employs laborers and mechanics for construction, alteration, or repair of facilities shall pay wages at prevailing rates as determined by the Secretary of Labor in accordance with the Davis-Bacon Act, as amended.

(f) *Nondiscrimination.* A sponsor or sponsor employee shall not discriminate against a Foster Grandparent on the basis of race, color, national origin, sex, age, religion, or political affiliation, or on the basis of disability, if the Foster Grandparent with a disability is qualified to serve.

(g) *Religious activities.* A Foster Grandparent or a member of the project staff funded by the Corporation shall not give religious instruction, conduct worship services or engage in any form of proselytization as part of his or her duties.

(h) *Nepotism.* Persons selected for project staff positions shall not be related by blood or marriage to other project staff, sponsor staff or officers, or members of the sponsor Board of Directors, unless there is written concurrence from the community group established by the sponsor under Subpart B of this part and with notification to the Corporation.

§ 2552.122 What legal coverage does the Corporation make available to Foster Grandparents?

It is within the Corporation's discretion to determine if Counsel is employed and counsel fees, court costs, bail and other expenses incidental to the defense of a Foster Grandparent is paid in a criminal, civil or administrative proceeding, when such a proceeding arises directly out of performance of the Foster Grandparent's activities. The circumstances under which the Corporation may pay such expenses are specified in 45 CFR part 1220.

Dated: August 25, 1998.

Thomas L. Bryant,

Acting General Counsel.

[FR Doc. 98–23301 Filed 9–2–98; 8:45 am]

BILLING CODE 6050–28–P

CORPORATION FOR NATIONAL AND COMMUNITY SERVICE

45 CFR Parts 1209 and 2553

RIN 3045–AA19

Retired and Senior Volunteer Program

AGENCY: Corporation for National and Community Service.

ACTION: Notice of proposed rulemaking.

SUMMARY: The Corporation for National and Community Service (hereinafter the ''Corporation'') proposes to amend the regulations governing the administration of the Retired and Senior Volunteer Program (RSVP). These amendments will: implement changes in the program's authorizing legislation; establish minimum program requirements with greater clarity; update program operations to make them responsive to changes that have occurred since the regulations were last published; consolidate requirements from outdated sources into one user friendly document; balance increased flexibility with increased responsibility and accountability at the local level; and incorporate new concepts of programming to highlight the accomplishments and impact of senior service.

The format used is designed to make the requirements easy for local sponsors and project managers to understand. It integrates related topics under one heading for easy reference.

Upon adoption, the proposed amendments will supersede the old ACTION regulations, and RSVP Operations Handbook 4700 dated May 1989.

DATES: Comments must be submitted on or before November 2, 1998.

ADDRESSES: Comments should be sent to the Corporation for National Service, Director, National Senior Service Corps, 1201 New York Avenue, NW., Washington, DC 20525.

FOR FURTHER INFORMATION CONTACT: John Keller, (202) 606–5000 ext 285.

SUPPLEMENTARY INFORMATION: The requirements governing the administration of RSVP projects are currently embodied in two documents: 45 CFR Part 1209 which was last published in the **Federal Register** on June 10, 1983, and the RSVP Operations Handbook. The proposed amendments will combine all minimum program requirements in just one document to make it easier for interested parties to secure basic program information.

The proposed amendments include modifications to current program requirements including those applicable to: the responsibilities of a RSVP sponsor, community participation in local project operations, full-time project director, authority to approve grants, waiver of non-federal support, and compensation for service.

The proposed amendments also reflect changes in the program's administrative structure resulting from the merger of the former ACTION agency into the Corporation in April 1994.

Regulatory Flexibility Act and Unfunded Mandate Reform Act

The General Counsel, in accordance with the Regulatory Flexibility Act (5 U.S.C. 606(b)), has reviewed this regulation and by approving certifies that this proposed rule will not have a significant impact on small business entities.

Under the Unfunded Mandates Reform Act of 1995, the Corporation certifies that this proposed rule does not include any Federal mandate that may result in the expenditure by State, local, and tribal governments, in the aggregate, or by the private sector, of $100,000,000 or more (adjusted annually for inflation) in any one year.

Paperwork Reduction Act of 1995

These proposed regulations have been examined under the Paperwork Reduction Act of 1995 and have been found to contain no information collection requirements.

Intergovernmental Review

This program is subject to the requirements of Executive Order 12372.

The objective of the Executive order is to foster an intergovernmental partnership and strengthened federalism by relying on processes developed by State and local governments for coordination and review of proposed Federal financial assistance.

In accordance with the order, this document is intended to provide early notification of the Corporation's specific plans and actions for this program.

Executive Order 12866

This regulation has been drafted and reviewed in accordance with Executive Order 12866. The Office of Management and Budget has reviewed this rule and has determined that this rule is not a ''significant regulatory action'' under Executive Order 12866, section 3(f), Regulatory Planning and Review.

Participation in the Rulemaking

The RSVP Program Council, a group established to provide advice to the Corporation on program related issues, was consulted, reviewed and gave recommendations on initial drafts of the proposed regulations. Council membership is comprised of RSVP project staff and sponsor representatives, as well as selected staff from the Corporation's field offices. A similar opportunity was given to all Corporation field staff, a group that plays an important role in the implementation of program regulations.

DISTRIBUTION TABLE

Old 45 CFR Part 1209	New 45 CFR Part 2553
1209.1–1	2553.11
1209.2–1	2553.22
1209.3–1	2553.31
1209.4–1	2553.41
1209.5–1	2553.51
	2553.61
	2553.71
	2553.81
	2553.91

List of Subjects

45 CFR Part 1209

Aged, Government contracts, Grant programs—social programs, Reporting and recordkeeping requirements, Volunteers.

45 CFR Part 2553

Aged, Grant programs—social programs, Volunteers.

Accordingly, and under the authority of 42 U.S.C. 12501 *et seq.*, the Corporation proposes to amend 45 CFR chapters XII and XXV as follows:

PART 1209—[REDESIGNATED AS PART 2553]

1. Part 1209 in 45 CFR chapter XII is redesignated as part 2553 in 45 CFR chapter XXV and is revised to read as follows:

PART 2553—THE RETIRED AND SENIOR VOLUNTEER PROGRAM

Subpart A—General

Sec.
2553.11 What is the Retired and Senior Volunteer Program?
2553.12 Definitions.

Subpart B—Eligibility and Responsibilities of a Sponsor

2553.21 Who is eligible to serve as a sponsor?
2553.22 What are the responsibilities of a sponsor?
2553.23 What are a sponsor's program responsibilities?
2553.24 What are a sponsor's responsibilities for securing community participation?
2553.25 What are a sponsor's administrative responsibilities?
2553.26 May a sponsor administer more than one program grant from the Corporation?

Subpart C—Suspension, Termination and Denial of Refunding

2553.31 What are the rules on suspension, termination and denial of refunding of grants?

Subpart D—Eligibility, Cost Reimbursements and Volunteer Assignments

2553.41 Who is eligible to be a RSVP volunteer?
2553.42 Is a RSVP volunteer a federal employee, an employee of the sponsor or of the volunteer station?
2553.43 What cost reimbursements are provided to RSVP volunteers?
2553.44 May cost reimbursements received by a RSVP volunteer be subject to any tax or charge, treated as wages or compensation, or affect eligibility to receive assistance from other programs?

Subpart E—Volunteer Terms of Service

2553.51 What are the terms of service of a RSVP volunteer?
2553.52 Under what circumstances may a RSVP volunteer's service be terminated?

Subpart F—Responsibilities of a Volunteer Station

2553.61 When may a sponsor serve as a volunteer station?
2553.62 What are the responsibilities of a volunteer station?

Subpart G—Application and Fiscal Requirements

2553.71 Application and award process.
2553.72 Project funding requirements.
2553.73 Grants management requirements.

Subpart H—Non-Corporation Funded Projects

2553.81 Under what conditions may an agency or organization sponsor a RSVP project without Corporation funding?
2553.82 What benefits are a non-Corporation funded project entitled to?
2553.83 What financial obligation does the Corporation incur for non-Corporation funded projects?
2553.84 What happens if a non-Corporation funded sponsor does not comply with the Memorandum of Agreement?

Subpart I—Restrictions and Legal Representation

2553.91 What legal limitations apply to the operation of the RSVP Program and to the expenditure of grant funds?
2553.92 What legal coverage does the Corporation make available to RSVP volunteers.

Authority: 42 U.S.C. 4950 *et seq.*, 5001.

Subpart A—General

§ 2553.11 What is the Retired and Senior Volunteer Program?

The Retired and Senior Volunteer Program (RSVP) provides grants to qualified agencies and organizations to engage persons 55 and older in volunteer service roles, matching their skills and personal interests to help meet significant community needs.

§ 2553.12 Definitions.

(a) *Act.* The Domestic Volunteer Service Act of 1973 as amended, Pub. L. 93–113, Oct. 1, 1973, 87 Stat. 396, 42 U.S.C. 4950 *et seq.*

(b) *Adequate Staffing Level.* The number of project staff or full-time equivalent needed by a sponsor to manage NSSC project operations considering such factors as: number of budgeted volunteers, number of volunteer stations, and the size of the service area.

(c) *Assignment.* The activities, functions or responsibilities to be performed by volunteers identified in a written outline or description.

(d) *Budget Period.* The time interval for which a project grant is awarded, as specified in the Notice of Grant Award (NGA). This is usually for 12 months.

(e) *Chief Executive Officer.* The Chief Executive Officer of the Corporation appointed under the Trust Act.

(f) *Corporation.* The Corporation for National and Community Service established under the Trust Act. The Corporation is also sometimes referred to as CNCS.

(g) *Cost Reimbursements.* Reimbursements budgeted as Volunteer Expenses and provided to volunteers to cover incidental costs, meals, transportation, volunteer insurance, and recognition to enable them to serve without cost to themselves.

(h) *Letter of Agreement.* A written agreement between a volunteer station, the sponsor, and person(s) served or the person legally responsible for that person. It authorizes the assignment of a RSVP volunteer in the home of a client, defines RSVP volunteer activities, and specifies supervision arrangements.

(i) *Memorandum of Understanding.* A written statement prepared and signed by the RSVP project sponsor and the volunteer station that identifies project requirements, working relationships and mutual responsibilities.

(j) *National Senior Service Corps (NSSC).* The collective name for the Foster Grandparent Program (FGP), the Retired and Senior Volunteer Program (RSVP), and the Senior Companion Program (SCP), and Demonstration Programs established under Parts A, B, and E, Title II of the Act. NSSC is also referred to as the ''Senior Corps'.

(k) *Non-Corporation Support (Required).* The percentage share of non-Federal cash and in-kind contributions required to be raised by the sponsor in support of the grant, including non-Corporation federal, state and local governments and privately raised contributions.

(l) *Non-Corporation Support (Excess).* The amount of non-Federal cash and in-kind contributions generated by a sponsor in excess of the required percentage.

(m) *Notice of Grant Award (NGA).* The official grant document signed by the Corporation and the sponsor. It documents the Corporation's obligation to provide financial support to the sponsor, and the sponsor's commitment to fulfill specific programmatic objectives and financial obligations.

(n) *Project.* The locally planned and implemented RSVP activity or set of activities in a service area as agreed upon between a sponsor and the Corporation.

(o) *Qualified Individual With a Disability.* An individual with a disability who, with or without reasonable accommodation, can perform the essential functions of a volunteer position that such individual holds or desires. For purposes of the Americans With Disabilities Act, consideration shall be given to a sponsor's or volunteer station's judgment as to what functions of a volunteer position are essential. If a sponsor has prepared a written description before advertising or interviewing applicants for the position, the written description shall be considered evidence of the essential functions of the volunteer position. This definition includes an individual with a physical or mental impairment as defined in section 101(8) of the Americans With Disabilities Act of 1990 (42 U.S.C. 12111(8)).

(p) *Service Area.* The geographically defined area approved in the grant application, in which RSVP volunteers are recruited, enrolled, and placed on assignments.

(q) *Sponsor.* A public agency or private nonprofit organization that is responsible for the operation of a RSVP project.

(r) *Trust Act.* The National and Community Service Trust Act of 1993, Public Law 103–82, Sept. 21, 1993, 107 Stat. 785.

(s) *United States and States.* Each of the several States, the District of Columbia, the U. S. Virgin Islands, the Commonwealth of Puerto Rico, Guam and American Samoa, and Trust Territories of the Pacific Islands.

(t) *Volunteer Station.* A public agency, nonprofit private organization or proprietary health care agency or organization that accepts responsibility for assignment, supervision and training of RSVP volunteers. Each volunteer station must be licensed or otherwise certified, when required, by appropriate state or local government. Private homes are not volunteer stations.

Subpart B—Eligibility and Responsibilities of a Sponsor

§ 2553.21 Who is eligible to serve as a sponsor?

The Corporation awards grants to public agencies, including Indian tribes and non-profit private organizations, in the United States that have the authority to accept and the capability to administer a RSVP project.

§ 2553.22 What are the responsibilities of a sponsor?

(a) A sponsor is responsible for fulfilling all project management requirements necessary to accomplish the purposes of the RSVP program as specified in the Act.

(b) A sponsor shall not delegate or contract these responsibilities to another entity.

(c) A sponsor shall comply with all regulations contained in this part, policies, and grant provisions prescribed by the Corporation.

§ 2553.23 What are a sponsor's program responsibilities?

A sponsor shall:

(a) Focus RSVP resources to have a positive impact on critical human and social needs within the project service area.

(b) Assess on an ongoing basis or collaborate with other community organizations in the assessment of the needs of the community or service area and develop strategies to respond to those needs using the resources of RSVP volunteers.

(c) Develop and manage a system of volunteer stations to provide a wide range of placement opportunities that appeal to persons age 55 and over by:

(1) Insuring that a volunteer station is a public or non-profit private organization or an eligible proprietary health care agency capable of serving as a volunteer station for the placement of RSVP volunteers to meet locally identified needs;

(2) Ensuring the placement of RSVP volunteers is governed by a Memorandum of Understanding:

(i) That is negotiated prior to placement;

(ii) That specifies the mutual responsibilities of the station and sponsor; and

(iii) That is renegotiated at least every three years; and

(3) Annually assessing the placement of RSVP volunteers to ensure the safety of volunteers and their impact on meeting the needs of the community.

(d) Consider the demographic make-up of the project service area in the enrollment of RSVP volunteers, making special efforts to recruit eligible individuals from minority groups, persons with disabilities and under represented groups.

(e) Encourage the most efficient and effective use of RSVP volunteers by coordinating project services and activities with related national, state and local programs, including other Corporation programs.

(f) Develop, and regularly update, a strategic plan that includes the sponsor's vision and goals for the project.

(g) Develop, and annually update, a plan for promoting service by older adults within the project service area.

(h) Conduct an annual assessment of the accomplishments and impact of the project and how they meet the identified needs and problems of the community.

(i) Provide RSVP volunteers with cost reimbursements specified in § 2553.43.

§ 2553.24 What are a sponsor's responsibilities for securing community participation?

(a) A sponsor shall secure community participation in local project operation by establishing an Advisory Council or a similar organizational structure with a membership that includes persons:

(1) Knowledgeable about human and social needs of the community;

(2) Competent in the field of community service and volunteerism;

(3) Capable of helping the sponsor meet its administrative and program responsibilities including fund-raising, publicity and impact programming;

(4) With an interest in and knowledge of the capability of older adults; and (5) Of a diverse composition that reflects the demographics of the service area.

(b) The sponsor determines how this participation shall be secured, consistent with the provisions of paragraphs (a)(1) through (a)(5) of this section.

§ 2553.25 What are a sponsor's administrative responsibilities?

A sponsor shall:

(a) Assume full responsibility for securing maximum and continuing community financial and in-kind support to operate the project successfully.

(b) Develop a written delegation of authority that carefully defines and clearly delineates project roles and responsibilities retained by the sponsor from those delegated to project staff.

(c) Provide levels of staffing and resources appropriate to accomplish the purposes of the project and carry out project management responsibilities outlined in the above mentioned delegation of authority and provide necessary administrative and fiscal support to such staff.

(d) Employ a full-time project director to accomplish program objectives and manage the functions and activities delegated to project staff for NSSC program(s) within its control. A full-time project director shall not serve concurrently in another capacity, paid or unpaid, during established working hours. The project director may participate in activities to coordinate program resources with those of related local agencies, boards or organizations. A sponsor may negotiate the employment of a part-time project director with the Corporation when it can justify that such an arrangement will result in a proportionate cost savings in Federal and Non-federal funds without adversely affecting the size, scope and quality of project operations.

(e) Consider all project staff as sponsor employees subject to its personnel policies and procedures.

(f) Compensate project staff at a level that is comparable with similar staff positions in the sponsor organization and/or project service area.

(g) Establish risk management policies and procedures covering project and RSVP activities. This includes provision of appropriate insurance coverage for RSVP volunteers and vehicles used in the project.

(h) Establish record keeping and reporting systems in compliance with Corporation requirements that ensure quality of program and fiscal operations, facilitate timely and accurate compliance; and cooperate with Corporation evaluation and data collection efforts.

(i) Comply with and ensure that all volunteer stations comply with, all applicable civil rights laws and regulations, including providing reasonable accommodation to qualified individuals with disabilities.

§ 2553.26 May a sponsor administer more than one program grant from the Corporation?

A sponsor may administer more than one Corporation program grant.

Subpart C—Suspension, Termination and Denial of Refunding

§ 2553.31 What are the rules on suspension, termination and denial of refunding of grants?

(a) The Chief Executive Officer or designee is authorized to suspend further payments or to terminate payments under any grant providing assistance under the Act whenever he/she determines there is a material failure to comply with applicable terms and conditions of the grant. The Chief Executive Officer shall prescribe procedures to insure that:

(1) Assistance under the Act shall not be suspended for failure to comply with applicable terms and conditions, except in emergency situations for thirty days;

(2) An application for refunding under the Act may not be denied unless the recipient has been given:

(i) Notice at least 75 days before the denial of such application of the possibility of such denial and the grounds for any such denial; and

(ii) Opportunity to show cause why such action should not be taken;

(3) In any case where an application for refunding is denied for failure to comply with the terms and conditions of the grant, the recipient shall be afforded an opportunity for an informal hearing before an impartial hearing officer, who has been agreed to by the recipient and the Corporation; and

(4) Assistance under the Act shall not be terminated for failure to comply with applicable terms and conditions unless the recipient has been afforded reasonable notice and opportunity for a full and fair hearing.

(b) In order to assure equal access to all recipients, such hearings or other meetings as may be necessary to fulfill the requirements of this section shall be held in locations convenient to the recipient agency.

(c) The procedures for suspension, termination, and denial of refunding, that apply to the Retired and Senior Volunteer Program are specified in 45 CFR Part 1206.

Subpart D—Eligibility, Cost Reimbursements and Volunteer Assignments

§ 2553.41 Who is eligible to be a RSVP volunteer?

(a) To be an RSVP volunteer, an individual must:

(1) Be 55 years of age or older;

(2) Agree to serve without compensation;

(3) Reside in or nearby the community served by RSVP;

(4) Agree to abide by all requirements as set forth in this part.

(b) Eligibility to serve as a RSVP volunteer shall not be restricted on the basis of formal education, experience, race, religion, color, national origin, sex, age, handicap or political affiliation.

§ 2553.42 Is a RSVP volunteer a federal employee, an employee of the sponsor or of the volunteer station?

RSVP volunteers are not employees of the sponsor, the volunteer station, the Corporation, or the Federal Government.

§ 2553.43 What cost reimbursements are provided to RSVP volunteers?

RSVP volunteers are provided the following cost reimbursements within the limits of the project's available resources:

(a) *Transportation*. RSVP volunteers may receive assistance with the cost of transportation to and from volunteer assignments and official project activities, including orientation and training, meetings, and recognition events. On-the-job or assignment related transportation costs are the responsibility of the volunteer station or a third party.

(b) *Meals.* RSVP volunteers may receive assistance with the cost of meals taken while on assignment.

(c) *Recognition*. RSVP volunteers are provided recognition for their service.

(d) *Insurance.* A RSVP volunteer is provided with the Corporation-specified minimum levels of insurance as follows:

(1) *Accident insurance.* Accident insurance covers RSVP volunteers for personal injury during travel between their homes and places of assignment, during their volunteer service, during meal periods while serving as a volunteer, and while attending project sponsored activities. Protection shall be provided against claims in excess of any benefits or services for medical care or treatment available to the volunteer from other sources.

(2) *Personal liability insurance.* Protection is provided against claims in excess of protection provided by other insurance. It does not include professional liability coverage.

(3) *Excess automobile liability insurance.* (i) For RSVP volunteers who drive in connection with their service, protection is provided against claims in excess of the greater of either:

(A) Liability insurance volunteers carry on their own automobiles; or

(B) The limits of applicable state financial responsibility law, or in its absence, levels of protection to be determined by the Corporation for each person, each accident, and for property damage.

(ii) RSVP volunteers who drive their personal vehicles to or on assignments or project-related activities shall maintain personal automobile liability insurance equal to or exceeding the levels established by the Corporation.

§ 2553.44 May cost reimbursements received by a RSVP volunteer be subject to any tax or charge, treated as wages or compensation, or affect eligibility to receive assistance from other programs?

No. RSVP volunteers' cost reimbursements are not subject to any tax or charge and are not treated as wages or compensation for the purposes of unemployment insurance, worker's compensation, temporary disability, retirement, public assistance, or similar benefit payments or minimum wage laws. Cost reimbursements are not subject to garnishment, do not reduce or eliminate the level of or eligibility for assistance or services a volunteer may be receiving under any governmental program.

Subpart E—Volunteer Terms of Service

§ 2553.51 What are the terms of service of a RSVP volunteer?

A RSVP volunteer shall serve multiple hours a week, on a regular basis, or intensively on short-term assignments. An active volunteer must serve at least once a month.

§ 2553.52 Under what circumstances may a RSVP volunteer's service be terminated?

(a) A sponsor may remove a RSVP volunteer from service for cause. Grounds for removal include but are not limited to: extensive and unauthorized absences; misconduct; inability to perform assignments; and failure to accept supervision.

(b) The sponsor shall establish appropriate policies on service termination as well as procedures for appeal from such adverse action.

Subpart F—Responsibilities of a Volunteer Station

§ 2553.61 When may a sponsor serve as a volunteer station?

In areas where needs have been identified and no volunteer station is available, the RSVP sponsor may assume responsibility to implement new programming initiatives on a temporary basis for up to three years.

§ 2553.62 What are the responsibilities of a volunteer station?

(a) A volunteer station shall undertake the following responsibilities in support of RSVP volunteers:

(1) Develop volunteer assignments that impact critical human and social needs, and regularly assess those assignments for continued appropriateness;

(2) Assign staff member responsible for day to day oversight of the placement of RSVP volunteers within the volunteer station and for assessing the impact of volunteers in addressing community needs;

(3) Obtain a Letter of Agreement for an RSVP volunteer assigned in-home. In cases where client confidentiality needs to be protected, a modified document that does not reveal client identities shall be used;

(4) Keep records and prepare reports as required;

(5) Comply with all applicable civil rights laws and regulations including reasonable accommodation for RSVP volunteers with disabilities; and

(6) Provide assigned RSVP volunteers the following support:

(i) Orientation to station and appropriate in-service training to enhance performance of assignments;

(ii) Resources required for performance of assignments including reasonable accommodation;

(iii) Supervision while on assignment;

(iv) Appropriate recognition; and

(v) Provide for the safety of RSVP volunteers assigned to it.

(b) A volunteer station shall undertake such other responsibilities as may be necessary to the successful performance of RSVP volunteers in their assignments or as agreed to in the Memorandum of Understanding.

Subpart G—Application and Fiscal Requirements

§ 2553.71 Application and award process.

(a) *When may an eligible organization apply for a grant?*

(1) An eligible organization may file an application for a RSVP grant at any time.

(2) Before submitting an application, an applicant shall determine the availability of funds.

(3) The Corporation may also solicit grant applicants. Applicants solicited by the Corporation are not assured of selection or approval and may have to compete with other solicited or unsolicited applicants.

(b) *What must an eligible organization include in a grant application?*

(1) An applicant shall complete standard forms prescribed by the Corporation.

(2) The applicant shall comply with the provisions of Executive Order 12372, the ''Intergovernmental Review of Federal Programs,'' (3 CFR, 1982 Comp., p. 197) in 45 CFR part 1233, and any other applicable requirements.

(c) *Who reviews the merits of a RSVP application?* The Corporation reviews and determines the merit of an application by its responsiveness to published guidelines and to the overall purpose and objectives of the program. When funds are available, the Corporation awards a grant in writing to each applicant whose grant proposal provides the best potential for serving the purpose of the program.

(d) *How is a RSVP project grant awarded?*

(1) The Corporation awards the grant to a sponsor in writing. The award is documented by a Notice of Grant Award (NGA).

(2) The Corporation and the sponsoring organization are parties to the NGA. The NGA will document the sponsor's commitment to fulfill specific programmatic objectives and financial obligations. It will document the extent of the Corporation's obligation to provide financial support to the sponsor.

(e) *What happens if the Corporation rejects an application?* The Corporation will return to the applicant an application that is not approved for funding, with an explanation of the Corporation's decision.

(f) *For what period of time does the Corporation award a grant?* The Corporation awards a RSVP grant for a period specified in the NGA and this is usually a budget period of 12 months duration.

§ 2553.72 Project funding requirements.

(a) *Is non-Corporation support required?*

(1) A Corporation grant may be awarded to fund up to 90 percent of the total project cost in the first year, 80 percent in the second year, and 70 percent in the third and succeeding years.

(2) A sponsor is responsible for identifying non-Corporation funds

which may include in-kind contributions.

(b) *Under what circumstances does the Corporation allow less than the percentage identified in paragraph (a) of this section?* The Corporation may allow exceptions to the local support requirement identified in paragraph (a) of this section in cases of demonstrated need such as:

(1) Initial difficulties in the development of local funding sources during the first three years of operations; or

(2) An economic downturn, the occurrence of a natural disaster, or similar events in the service area that severely restricts or reduces sources of local funding support; or

(3) The unexpected discontinuation of local support from one or more sources that a project has relied on for a period of years.

(c) *May the Corporation restrict how a sponsor uses locally generated contributions in excess of the non-Corporation support required?* Whenever locally generated contributions to RSVP projects are in excess of the non-Corporation funds required (10 percent of the total cost in the first year, 20 percent in the second year and 30 percent in the third and succeeding years), the Corporation may not restrict the manner in which such contributions are expended provided such expenditures are consistent with the provisions of the Act.

(d) *Are program expenditures subject to audit?* All expenditures by the grantee of Federal and Non-Federal funds, including expenditures from excess locally generated contributions, are subject to audit by the Corporation, its Inspector General, or their authorized agents.

(e) *How much of the grant must be budgeted to pay volunteer expenses or cost reimbursements?* The total volunteer expenses and cost reimbursements for RSVP volunteers, including transportation, meals, recognition and insurance shall be an amount equal to at least 25% percent of the Corporation funds in the grant award. Corporation and non-Corporation resources may be used to make up this sum.

§ 2553.73 Grants management requirements.

What rules govern a sponsor's management of grants?

(a) A sponsor shall manage a grant awarded in accordance with:

(1) The Act;

(2) Regulations in this part;

(3) 45 CFR Part 2541, ''Uniform Requirements for Grants and Cooperative Agreements with State and Local Governments'', or 45 CFR Part 2543, ''Grants and Agreements with Institutions of Higher Education, Hospitals, and Other Non-Profit Organizations';

(4) The following OMB Circulars, as appropriate A–21, ''Cost Principles for Institutions of Higher Education'', A–87, ''Cost Principles for State and Local Governments'', A–122, ''Cost Principles for Non-Profit Organizations'', and A–133, ''Audits of Institutions of Higher Education and Other Non-Profit Organizations'' (OMB circulars are available at the following address: Office of Administration, Publication Office, 725 17th Street, NW, Room 2200, Washington, DC 20503); and

(5) Other applicable Corporation requirements.

(b) Project support provided under a Corporation grant shall be furnished at the lowest possible cost consistent with the effective operation of the project.

(c) Project costs for which Corporation funds are budgeted must be justified as being essential to project operation.

(d) Project funds shall not be used to reimburse volunteers for expenses, including transportation costs, incurred while performing their volunteer assignments. Volunteers on assignment during a normal meal period may be reimbursed for the meal cost. Equipment or supplies for volunteers on assignment are not allowable costs. Assignment related costs of transportation, equipment, supplies, etc. are the responsibility of the volunteer station or a third party.

(e) Volunteer expense items, including transportation, meals, recognition activities and items purchased at the volunteers own expense that are not reimbursed, are not allowable as contributions to the non-Federal share of the budget.

(f) Costs of other insurance not required by program policy, but maintained by a sponsor for the general conduct of its activities are allowable with the following limitations:

(1) Types and extent of and cost of coverage are according to sound institutional and business practices;

(2) Costs of insurance or a contribution to any reserve covering the risk of loss of or damage to Government-owned property are unallowable unless the government specifically requires and approves such costs; and

(3) The cost of insurance on the lives of officers, trustees or staff is unallowable except where such insurance is part of an employee plan which is not unduly restricted.

(g) Costs to bring a sponsor into basic compliance with accessibility requirements for individuals with disabilities are not allowable costs.

(h) Payments to settle discrimination allegations, either informally through a settlement agreement or formally as a result of a decision finding discrimination, are not allowable costs.

(i) Written Corporation State Office approval/concurrence is required for the following changes in the approved grant:

(1) Change in the approved service area.

(2) Transfer of budgeted line items from Volunteer Expenses to Support Expenses. This requirement does not apply if the 25 percent cost reimbursement ratio is maintained.

Subpart H—Non-Corporation Funded Projects

§ 2553.81 Under what conditions may an agency or organization sponsor a RSVP project without Corporation funding?

An eligible agency or organization who wishes to sponsor a RSVP project without Corporation funding, must sign a Memorandum of Agreement with the Corporation that:

(a) Certifies its intent to comply with all Corporation requirements for the Retired and Senior Volunteer Program; and

(b) Identifies responsibilities to be carried out by each party.

§ 2553.82 What benefits are a non-Corporation funded project entitled to?

(a) All technical assistance and materials provided to Corporation-funded RSVP projects; and

(b) The application of the provisions of Section 404 (f) (1) and Section 418 of the Act.

§ 2553.83 What financial obligation does the Corporation incur for non-Corporation funded projects?

Entry into a Memorandum of Agreement with, or issuance of a NGA to the sponsor of a non-Corporation funded project does not create a financial obligation on the part of the Corporation for any costs associated with the project.

§ 2553.84 What happens if a non-Corporation funded sponsor does not comply with the Memorandum of Agreement?

A non-Corporation funded project sponsor's noncompliance with the Memorandum of Agreement shall result in suspension or termination of the Corporation's agreement and all benefits specified in § 2553.82.

Subpart I—Restrictions and Legal Representation

§ 2553.91 What legal limitations apply to the operation of the RSVP Program and to the expenditure of grant funds?

(a) *Political activities.* (1) No part of any grant shall be used to finance, directly or indirectly, any activity to influence the outcome of any election to public office, or any voter registration activity.

(2) No project shall be conducted in a manner involving the use of funds, the provision of services, or the employment or assignment of personnel in a matter supporting or resulting in the identification of such project with:

(i) any partisan or nonpartisan political activity associated with a candidate, or contending faction or group, in an election; or

(ii) any activity to provide voters or prospective voters with transportation to the polls or similar assistance in connection with any such election; or

(iii) any voter registration activity, except that voter registration applications and nonpartisan voter registration information may be made available to the public at the premises of the sponsor, but, in making such information available, employees of the sponsor shall not express preferences or seek to influence decisions concerning any candidate, political party, election issue, or voting decision.

(3) The sponsor shall not use grant funds in any activity for the purpose of influencing the passage or defeat of legislation or proposals by initiative petition, except:

(i) In any case in which a legislative body, a committee of a legislative body, or a member of a legislative body requests any volunteer in, or employee of such a program to draft, review or testify regarding measures or to make representation to such legislative body, committee or member; or

(ii) In connection with an authorization or appropriations measure directly affecting the operation of the RSVP Program.

(b) *Nondisplacement of Employed Workers.* A RSVP volunteer shall not perform any service or duty or engage in any activity which would otherwise be performed by an employed worker or which would supplant the hiring of or result in the displacement of employed workers, or impair existing contracts for service.

(c) *Compensation For Service.* (1) An agency or organization to which NSSC volunteers are assigned, or which operates or supervises any NSSC program shall not request or receive any compensation from NSSC volunteers or from beneficiaries for services of NSSC volunteers.

(2) This section does not prohibit a sponsor from soliciting and accepting voluntary contributions from the community at large to meet its local support obligations under the grant; or, from entering into agreements with parties other than beneficiaries to support additional volunteers beyond those supported by the Corporation grant.

(3) A RSVP volunteer station may contribute to the financial support of the RSVP Program. However, this support shall not be a required precondition for a potential station to obtain or retain RSVP volunteers. If a volunteer station agrees to provide funds to support additional volunteers or pay for other volunteer support costs, the agreement shall be stated in a written memorandum of agreement.

(4) The sponsor shall withdraw services if the station's inability to provide monetary or in-kind support to the project diminishes or jeopardizes the project's financial capabilities to fulfill its obligations.

(5) Under no circumstances shall a RSVP volunteer receive a fee for service from service recipients, their legal guardian, members of their family, or friends.

(d) *Labor and Anti-Labor Activity.* The sponsor shall not use grant funds directly or indirectly to finance labor or anti-labor organization or related activity.

(e) *Fair Labor Standards.* A sponsor that employs laborers and mechanics for construction, alteration, or repair of facilities shall pay wages at prevailing rates as determined by the Secretary of Labor in accordance with the Davis-Bacon Act, as amended.

(f) *Nondiscrimination.* A sponsor or sponsor employee shall not discriminate against a RSVP volunteer on the basis of race, color, national origin, sex, age, religion, or political affiliation, or on the basis of disability, if the volunteer with a disability is qualified to serve.

(g) *Religious activities.* A RSVP volunteer or a member of the project staff funded by the Corporation shall not give religious instruction, conduct worship services or engage in any form of proselytization as part of his/her duties.

(h) *Nepotism.* Persons selected for project staff positions shall not be related by blood or marriage to other project staff, sponsor staff or officers, or members of the sponsor Board of Directors, unless there is written concurrence from the Advisory Council or community group established by the sponsor under subpart B of this part, and with notification to the Corporation.

§ 2553.92 What legal coverage does the Corporation make available to RSVP volunteers?

It is within the Corporation's discretion to determine if Counsel is employed and counsel fees, court costs, bail and other expenses incidental to the defense of a RSVP volunteer is paid in a criminal, civil or administrative proceeding, when such a proceeding arises directly out of performance of the volunteer's activities. The circumstances under which the Corporation may pay such expenses are specified in 45 CFR part 1220.

Dated: August 25, 1998.

Thomas L. Bryant,

Acting General Counsel.

[FR Doc. 98–23302 Filed 9–2–98; 8:45 am]

BILLING CODE 6050–28–P

FEDERAL COMMUNICATIONS COMMISSION

47 CFR Part 73

[MM Docket No. 98–154; RM–9174]

Radio Broadcasting Services; Kosciusko and Goodman, MS

AGENCY: Federal Communications Commission.

ACTION: Proposed rule.

SUMMARY: This document requests comments on a petition for rule making filed on behalf of Rainey Broadcasting, Inc., permittee for a new FM broadcast station on Channel 277C3 at Kosciusko, Mississippi (File No. BPH–950525MK), requesting the reallotment of Channel 277C3 to Goodman, Mississippi, and modification of the authorization to specify Goodman as its community of license, pursuant to the provisions of Section 1.420(i) of the Commission's Rules. Coordinates used for Channel 277C3 at Goodman are 32–58–45 and 89–54–22.

DATES: Comments must be filed on or before October 19, 1998, and reply comments on or before November 3, 1998.

ADDRESSES: Secretary, Federal Communications Commission, Washington, DC 20554. In addition to filing comments with the FCC, interested parties should serve the petitioner's counsel, as follows: Mark N. Lipp, Esq., Shook, Hardy and Bacon, 801 Pennsylvania Avenue, NW., Suite 600, Washington, DC 20004.

FOR FURTHER INFORMATION CONTACT: Nancy Joyner, Mass Media Bureau, (202) 418–2180.

SUPPLEMENTARY INFORMATION: This is a synopsis of the Commission's Notice of Proposed Rule Making, MM Docket No. 98–154, adopted August 19, 1998, and released August 28, 1998. The full text of this Commission decision is available for inspection and copying during normal business hours in the FCC's Reference Center (Room 239), 1919 M Street, NW., Washington, DC. The complete text of this decision may also be purchased from the Commission's copy contractor, International Transcription Service, Inc., 1231 20th Street, NW., Washington, DC 20036, (202) 857–3800.

Provisions of the Regulatory Flexibility Act of l980 do not apply to this proceeding.

Members of the public should note that from the time a Notice of Proposed Rule Making is issued until the matter is no longer subject to Commission consideration or court review, all *ex parte* contacts are prohibited in Commission proceedings, such as this one, which involve channel allotments. See 47 CFR 1.1204(b) for rules governing permissible *ex parte* contacts.

For information regarding proper filing procedures for comments, See 47 CFR 1.415 and 1.420.

List of Subjects in 47 CFR Part 73

Radio broadcasting.

Federal Communications Commission.

John A. Karousos,

Chief, Allocations Branch, Policy and Rules Division, Mass Media Bureau.

[FR Doc. 98–23749 Filed 9–2–98; 8:45 am]

BILLING CODE 6712–01–U

FEDERAL COMMUNICATIONS COMMISSION

47 CFR Part 73

[MM Docket No. 98–155, RM–9082, RM–9133]

Radio Broadcasting Services; Alva, Mooreland, Tishomingo, Tuttle and Woodward, OK

AGENCY: Federal Communications Commission.

ACTION: Proposed rule.

SUMMARY: The Commission requests comments on two interrelated petitions filed by FM 92 Broadcasters, Inc. seeking the allotment of Channel 261C1 to Mooreland, OK, as the community's first local aural service, and the substitution of Channel 228A for Channel 261C1 at Woodward, OK and the modification of Station KWFX(FM)'s license to specify operation on the Class A channel. Ralph Tyler seeks the reallotment of Channel 259C3 from Tishomingo, OK to Tuttle, OK, as the community's first local aural service, and the modification of Station KTSH's license accordingly. To accommodate the allotment at Tuttle, Tyler also requests the substitution of Channel 292C1 for Channel 260C1 at Woodward, OK, the modification of Station KWFX(FM)'s license accordingly, and the substitution of Channel 260C1 for Channel 259C1 at Alva, OK, and the modification of Station KXLS(FM)'s license accordingly. Channel 260C1 can be allotted to Alva at Station KXLS's licensed transmitter site, at coordinates 36–35–41 NL; 98–15–38 WL. Channel 292C1 or Channel 228A can be allotted to Woodward at Station KWFX's licensed transmitter site, at coordinates 36–25–42; 99–24–10. as well as at the transmitter site set forth in its pending application (BPH–970811IC). Channel 283C1 can be allotted to Mooreland with a site restriction of 9.3 kilometers south (5.8 miles), at coordinates 36–21–24; 99–13–37, to avoid a short-spacing to Station KTCM, Channel 262C2, Kingman, Kansas. Channel 259C3 can be allotted to Tuttle with a site restriction of 9.3 kilometers (5.8 miles) east, at coordinates 35–17–33; 97–42–58, to accommodate Tyler's desired transmitter site.

DATES: Comments must be filed on or before October 19, 1998, and reply comments on or before November 3, 1998.

ADDRESSES: Federal Communications Commission, Washington, DC 20554. In addition to filing comments with the FCC, interested parties should serve the petitioner, or its counsel or consultant, as follows: Kathryn R. Schmeltzer, Kevin M. Walsh, Fisher Wayland Cooper Leader & Zaragoza, L.L.P., 2001 Pennsylvania Avenue, NW, Washington, DC 20006 (Counsel to FM 92); Gary S. Smithwick, Smithwick & Belendiuk, P.C., 1990 M Street, NW, Suite 510, Washington, DC 20036 (Counsel to Tyler).

FOR FURTHER INFORMATION CONTACT: Leslie K. Shapiro, Mass Media Bureau, (202) 418–2180.

SUPPLEMENTARY INFORMATION: This is a synopsis of the Commission's Notice of Proposed Rule Making and Orders to Show Cause, MM Docket No. 98–155, adopted August 19, 1998, and released August 28, 1998. The full text of this Commission decision is available for inspection and copying during normal business hours in the FCC Reference Center (Room 239), 1919 M Street, NW., Washington, DC. The complete text of this decision may also be purchased from the Commission's copy contractor, International Transcription Services, Inc., (202) 857–3800, 1231 20th Street, NW, Washington, DC 20036.

Provisions of the Regulatory Flexibility Act of 1980 do not apply to this proceeding.

Members of the public should note that from the time a Notice of Proposed Rule Making is issued until the matter is no longer subject to Commission consideration or court review, all *ex parte* contacts are prohibited in Commission proceedings, such as this one, which involve channel allotments. See 47 CFR 1.1204(b) for rules governing permissible *ex parte* contacts.

For information regarding proper filing procedures for comments, see 47 CFR 1.415 and 1.420.

List of Subjects in 47 CFR Part 73

Radio broadcasting.

Federal Communications Commission.

John A. Karousos,

Chief, Allocations Branch, Policy and Rules Division, Mass Media Bureau.

[FR Doc. 98–23750 Filed 9–2–98; 8:45 am]

BILLING CODE 6712–01–U

DEPARTMENT OF TRANSPORTATION

National Highway Traffic Safety Administration

49 CFR Part 572

[Docket No. NHTSA–98–3972, Notice 2]

RIN 2127–AG76

Anthropomorphic Test Dummy; Occupant Crash Protection

AGENCY: National Highway Traffic Safety Administration (NHTSA), Department of Transportation.

ACTION: Notice of proposed rulemaking; Correction and clarification.

SUMMARY: This document corrects and clarifies a notice of proposed rulemaking published in the **Federal Register** (63 FR 35170) on June 29, 1998, concerning a new, more advanced 6-year old child dummy. The document makes technical corrections in the proposed specifications for the neck assembly calibration tests, corrects and clarifies that digital patterns and molds are not part of the proposed specifications for the dummy, and announces that the draft SAE user's manual for this dummy has been placed in the docket.

FOR FURTHER INFORMATION CONTACT: For nonlegal issues: Stan Backaitis, Office of

Crashworthiness Standards (telephone: 202–366–4912). For legal issues: Edward Glancy, Office of the Chief Counsel (202–366–2992). Both can be reached at the National Highway Traffic Safety Administration, 400 Seventh St., S.W., Washington, D.C., 20590.

SUPPLEMENTARY INFORMATION: On June 29, 1998, NHTSA published in the **Federal Register** (63 FR 35170) a notice of proposed rulemaking (NPRM) to amend 49 CFR Part 572 by adding design and performance specifications for a new, more advanced 6-year old child dummy. This dummy is part of the family of Hybrid III test dummies, and is called the Hybrid III 6-year-old child dummy (hereafter referred to as the H–III6C dummy). Since publishing that document, the agency has become aware of a need to make certain corrections and clarifications.

First, at a Society of Automotive Engineers Hybrid III Dummy Family Task Group meeting held on August 13, 1998 in Detroit, Michigan, certain statements in the NPRM that warranted clarification or correction were identified. One of these concerned the way moments (Nm) were specified in the proposed neck assembly calibration tests (proposed § 572.123(b)(1) and (b)(2)). The proposed language for both the flexion and extension tests stated that, during certain rotation intervals, ''the moment measured by the neck transducer'' about the occipital condyles must be within a specified range. The reference to ''moment'' should have referred to ''peak moment.'' Thus, once the moment reaches the lower limit of the specified range, it would be permitted to drop below that limit, while still within the rotation corridor, without failing the calibration specification.

The agency was also advised of an incomplete specification in the proposed range of rotation for the extension test (§ 572.123(b)(1)). The upper value for that range was inadvertently omitted. It should have been 106 degrees.

Second, in reviewing a separate request from a dummy manufacturer for digital patterns and molds for the proposed dummy, the agency recognized an error in the June 29, 1998 NPRM. The NPRM incorrectly indicated that the specifications for the proposed H–III6C would include the digital patterns and molds. The agency has not in the past made patterns and molds part of the Part 572 specifications for the various dummies but instead, where available, has provided them to the public solely as a manufacturing aid, and referenced that availability in Part 572. In order to meet the specifications of Part 572, a dummy must be consistent with the drawings and meet calibration tests, but need not be made using any specific patterns and molds. The agency wishes to correct and clarify that digital patterns and molds are not part of the proposed specifications for the dummy. NHTSA also notes that it does not possess such digital patterns and molds.

That same dummy manufacturer also requested a copy of the user's manual for the H–III6C dummy. In the June 29 NPRM, the agency stated that the user's manual would not be available until the time of the final rule. However, NHTSA has now placed in the docket [1] the draft SAE user's manual for the dummy. The agency will consider the draft SAE user's manual in developing the final rule. NHTSA may, however, prepare its own user's manual in connection with the final rule. Commenters are invited to address which items included in the draft SAE user's manual may be appropriate and necessary for incorporating into Part 572, and whether any additional items are needed.

Accordingly, for the reasons discussed above, in FR Doc. 98–17138 published on June 29, 1998 (63 FR 35170) make the following corrections.

PART 572—ANTHROPOMORPHIC TEST DEVICES

1. The authority citation for part 572 of title 49 would continue to read as follows:

Authority: 49 U.S.C. 322, 30111, 30115, 30117, and 30166; delegation of authority at 49 CFR 1.50.

Subpart N—Hybrid III 6-year-Old Child

2. Section 572.120 as proposed to be added at 63 FR 35172 is revised to read as follows:

§ 572.120 Incorporation by reference.

(a) The following materials are hereby incorporated in subpart N by reference:

(1) A drawings and specifications package entitled ''Drawings and Specifications for the Hybrid III 6-Year-Old Dummy (May 1998)'';

(2) A user's manual entitled ''User's Manual for the Hybrid III 6-Year-Old Dummy [a date will be inserted in the final rule]'';

(3) SAE Recommended Practice J211, Rev. Mar95 ''Instrumentation for Impact Tests'';

(4) SAE J1733 of 1994–12, ''Sign Convention for Vehicle Crash Testing.''

(5) The Director of the Federal Register approved those materials incorporated by reference in accordance with 5 U.S.C. 552(a) and 1 CFR part 51. Copies of the materials may be inspected at NHTSA's Docket Section, 400 Seventh Street S.W., room 5109, Washington, DC, or at the Office of the Federal Register, 800 North Capitol Street, NW, Suite 700, Washington, DC.

(b) The incorporated materials are available as follows:

(1) The drawings and specifications package referred to in paragraph (a)(1) of this section and the user's manual referred to in paragraph (a)(2) of this section are available from Reprographic Technologies, 9000 Virginia Manor Road, Beltsville, MD 20705 (301) 419–5070.

(2) The SAE materials referred to in paragraphs (a)(3) and (a)(4) of this section are available from the Society of Automotive Engineers, Inc., 400 Commonwealth Drive, Warrendale, PA 15096.

3. Section 572.121 as proposed to be added at 63 FR 65173 is revised to read as follows:

§ 572.121 General description.

(a)(1) The Hybrid III 6-year-old dummy consists of the components and assemblies that are described by ''Drawings and Specifications for the Hybrid III 6-Year-Old Dummy (May 1998).'' The complete assembly of the dummy is shown in drawing 127–0000. The component assemblies, and their drawing numbers, are listed in the following Table A:

TABLE A

Component assembly	Drawing No.
Head Assembly	127–1000
Neck Assembly	127–1015
Upper Torso Assembly	127–2000
Lower Torso Assembly	127–3000
Leg Assembly	127–4000
Arm Assembly	127–5000

(2) These drawings, and all other drawings referred to in this subpart by the term ''drawing'' followed by a number, are contained in ''Drawings and Specifications for the Hybrid III 6-Year-Old Dummy (May 1998).''

(b) Disassembly, inspection, and assembly procedures are set forth in ''User's Manual for the Hybrid III 6-Year-Old Dummy [a date will be inserted in the final rule]''.

(c) Adjacent segments are joined in a manner such that except for contacts existing under static conditions, there is no contact between metallic elements

[1] Since this item is non-scannable, it cannot be placed in the DOT Dockets Management System (DMS). Instead, a statement indicating where it may be viewed, i.e., in NHTSA's docket, has been placed in the DMS.

throughout the range of motion or under simulated crash impact conditions.

(d) The structural properties of the dummy are such that the dummy conforms to this part in every respect both before and after its use in any test similar to those specified in Standard No. 208, *Occupant Crash Protection* and Standard No. 213, *Child Restraint Systems.*

4. Section 572.123(b)(1) and (2) as proposed to be added at 63 FR 35173 are revised to read as follows:

§ 572.123 Neck assembly and test procedure.

* * * * *

(b) * * *

(1) Flexion. Plane D referenced in Figure N2, shall rotate in the direction of preimpact flight with respect to the pendulum's longitudinal centerline not less than 74 degrees and not more than 92 degrees. During this rotation interval, the peak moment measured by the neck transducer (drawing SA–572 S11) about the occipital condyles shall not be less than 27Nm (19.9 ft-lb) and not more than 33 Nm (24.3 ft-lb). The moment shall be calculated by the following formula: Moment (Nm) = My—(0.01778m) × (Fx). The positive moment shall decay for the first time to 5 Nm between 103 ms and 123 ms.

(2) Extension. Plane D referenced in Figure N3, shall rotate in the direction of preimpact flight with respect to the pendulum's longitudinal centerline not less than 94 degrees and not more than 106 degrees. During this rotation interval, the peak moment measured by the neck transducer (drawing S–572 S11) about the occipital condyles shall not be more than -19 Nm (-14 ft-lb) and not less than -24 Nm (-17.7 ft-lb). The moment shall be calculated by the following formula: Moment (Nm) = My—(0.01778m) × (Fx). The negative moment shall decay for the first time to -5 Nm between 127 ms and 147ms.

* * * * *

Issued on: August 31, 1998.

L. Robert Shelton,

Associate Administrator for Safety Performance Standards.

[FR Doc. 98–23794 Filed 9–2–98; 8:45 am]

BILLING CODE 4910–59–P

DEPARTMENT OF TRANSPORTATION

National Highway Traffic Safety Administration

49 CFR Part 572

[Docket No. NHTSA–98–4283]

RIN 2127–AG66

Anthropomorphic Test Dummy; Occupant Crash Protection

AGENCY: National Highway Traffic Safety Administration (NHTSA), Department of Transportation.

ACTION: Notice of proposed rulemaking.

SUMMARY: This document proposes to amend 49 CFR Part 572 by adding design and performance specifications for a new dummy whose height and weight are representative of a fifth percentile female adult. This new dummy, which is part of the family of Hybrid III test dummies, could be used to accurately assess the potential for injuries to small women, particularly those who sit close to an air bag. The new dummy is especially needed to ensure that air bags protect small women in frontal crashes and to minimize the risk from air bags during those crashes. The dummy would also provide a means of gathering useful information in a variety of crash environments to better evaluate vehicle safety. The issue of amending various safety standards to specify use of the dummy in determining compliance with the performance requirements of those standards, e.g., the agency's occupant protection standard, will be addressed in other rulemakings, particularly the agency's advanced air bag rulemaking for which an NPRM will be published later this year. The agency is also proposing to remove the current requirement that test dummies remain undamaged at the conclusion of a compliance test. It plans to apply this change to other test dummies in subsequent rulemakings.

DATES: Comments must be received by December 2, 1998.

ADDRESSES: Comments should refer to the docket number, and be submitted to: Docket Management, Room PL–401, 400 Seventh Street, S.W., Washington, DC 20590 (Docket hours are from 10:00 a.m. to 5:00 p.m.)

FOR FURTHER INFORMATION CONTACT: For non-legal issues: Stan Backaitis, Office of Crashworthiness Standards, (telephone: 202–366–4912). For legal issues: Rebecca MacPherson, Office of the Chief Counsel (202–366–2992). Both can be reached at the National Highway Traffic Safety Administration, 400 Seventh St., S.W., Washington, DC, 20590.

SUPPLEMENTARY INFORMATION: Recent air bag fatalities and injuries in low speed crashes to small female drivers seated close to the deploying air bag have raised serious concerns about the safety of air bags for this portion of the population.[1] One way to evaluate the risks associated with air bag systems is through the use of human mechanical surrogates with a high degree of biofidelity such as the family of Hybrid III-type crash test dummies. The desirability of a fifth percentile adult female dummy has been apparent for a number of years; however, the need for such a dummy has become more urgent with the emergence of potential safety problems that some of the current driver-side air bags may pose for small statured females. During the March 1997 NTSB hearing on the safety of air bag systems, several industry commenters addressed the need to revise FMVSS No. 208, Occupant Crash Protection, by adopting new test procedures and test devices and by assessing the safety of the occupant protection systems with suitable injury assessment criteria. The commenters noted that the Hybrid III-type fifth percentile female dummy has been used by industry for research purposes for several years and asserted that there was no reason not to use the dummy in air bag certification programs.

The fifth percentile adult female dummy (H–III5F) is part of a family of Hybrid III-type dummies. The first Hybrid III dummy was a 50th percentile male dummy. NHTSA has specified use of that dummy for compliance testing under FMVSS No. 208, since 1986, initially on an optional basis, and more recently on a mandatory basis. The second dummy, the six-year-old child, was the subject of an NPRM published on June 28, 1998 (63 FR 35170). The need for a family of Hybrid III-type dummies having considerably improved biofidelity and anthropometry was recognized by the Centers for Disease Control and Prevention (CDC) in 1987 when it awarded a contract to Ohio State University under the title ''Development for Multi-Sized Hybrid III Based Dummy Family.'' Development of the H–III5F has continued since then

[1] Distance from the air bag is the primary factor leading to serious injury or fatality. Several factors can lead to an individual being too close to the air bag at the time of deployment, including failure to wear a safety belt. Nevertheless, very small-statured women appear to constitute the largest segment of the population that may not be able to sit a safe distance from the air bag, even when properly restrained. Additionally, differences in body size may lead to more severe injury for a small-statured woman than for an unrestrained average-size male.

under the guidance of the Hybrid III Dummy Family Task Force of SAE.[2] The task force invited experts from biomechanics, instrumentation, and dummy design to guide this development. In defining the specifications for an adult small female dummy, the task force selected key body lengths and weights based on anthropometry data for the smallest fifth percent of the United States adult female population. Geometric and mass scale factors were developed to assure that each body segment had the same mass density as the corresponding Hybrid III body segment.

NHTSA has been involved in the development of the H–III5F dummy, initially as an observer in meetings of the SAE taskforce. Subsequently, around 1994, as the dummy's design began to mature, the agency started to use the dummy in several test and development programs. However, the dummy's continuous use had to be supported by significant repairs and modifications, which did not allow the agency to conduct a conclusive assessment of the dummy's capabilities and utility. The agency indicated to the SAE task group as early as 1994 its interest in seeing dummy development brought to a quick conclusion. Subsequent testing of the H–III5F dummy revealed additional problems requiring further redesigns in the neck and thorax area, which stretched the first availability of preproduction dummies into midsummer 1997. At that time NHTSA began an extensive test and evaluation program of the dummy. The dummies were exposed to a variety of crash environments to determine their suitability and stability as measuring tools in the most severe crashes.

The agency has now completed its evaluation of the H–III5F dummy and has tentatively concluded that it is ready for incorporation into Part 572. NHTSA is placing in the docket a technical report entitled ''Development and Evaluation of the Hybrid III 5th Percentile Adult Female Dummy,'' minutes of SAE Hybrid III dummy family Task Group meetings relating to the dummy, and drawings of the proposed dummy. These documents provide the technical information supporting this rulemaking.

Several adaptations have been made to the H-III5F as a result of the NHTSA evaluation program, use of the dummy in the agency's development programs, and SAE task group recommendations. The dummy being proposed today has been modified as follows:

- The head skin contains TMJ configuration (a structural skin filler that bridges the temporo-mandibular notch in the dummy's skull and the voids underneath the chin) to prevent the deploying air bag from snagging under the chin.
- The neck is of segmented construction and made of flexible, molded butyl rubber with steel discs as end plates. The discs are designed to provide human-like flexion (forward bending), extension (rearward bending), and dynamic response to meet biofidelity response requirements. Potential for cervical spine injury is assessed with a six channel neck transducer consisting of three force and three moment channels.
- The thorax now meets documented biofidelity impact performance requirements. It is capable of compression displacement of at least 2.5 inches before contacting spine based bumper stops. The spine box contains provisions for mounting three uniaxial accelerometers at the T4 level, three uniaxial accelerometers at its upper, middle and lower portions, and a chest deflection potentiometer. The sternum has provisions for attachment of uniaxial accelerometers at the upper, middle and lower ends of the sternum slider. They are in co-linear alignment with the uniaxial accelerometers on the spine and permit the monitoring of chest compression velocity and deflection at several points on the sternum. Upper and lower rib guides are used to limit vertical movement of the ribs, which were found to be significantly prevalent in out-of-position tests.
- The lower torso lumbar spine and abdominal insert designs provide human-like and repeatable motion capabilities between the upper and lower torso halves. Appropriate flexion tests have been added to the proposed test procedure to assure that the torso flexion stiffness is similar between dummies. Provisions are available for mounting a lumbar load cell, and three uniaxial accelerometers in the instrument cavity at the rear of the pelvis casting. The pelvis bone also has provisions for mounting submarine-indicating transducers on the front face of the iliac wings.
- The femurs are capable of human-like tibia articulation in the flexion direction, with plastic bumper stops limiting the amount of motion and preventing metal-to-metal contact with the pelvic bone. The femurs may be equipped with either uniaxial or multiaxial force transducers. Optional knee slider mechanisms allow for limited displacement of the tibia relative to the femur with provisions for mounting deflection transducers.
- The feet are of new construction. They are attached to the tibias via a ball joint ankle, which allows motion of the foot in plantar flexion, dorsi flexion, inversion and eversion, as well as medial and lateral rotations. A rubber bumper mounted on the ankle limits the range of motion of the foot to human-like limits and prevents metal-to-metal contact between the foot and the ankle-tibia structure. An Ensolite pad is incorporated into the heel of the foot, providing a degree of human-like heel compliance.

The agency is proposing specifications and performance criteria for the H-III5F dummy. The specifications would consist of the following two items:[3]

(1) A drawings and specifications package entitled ''Parts List and Drawings for the Hybrid III 5th Percentile Adult Female Dummy (August, 1998)''; and

(2) A user's manual entitled ''User's Manual for the Hybrid III 5th Percentile Adult Female Dummy [a date would be inserted in the final rule]''.

These specifications are intended to ensure that the dummies are uniform in their construction and assembly, and capable of uniform and repeatable response in the impact environment. The agency notes that the first item listed above, the drawings and specifications, is available for inspection in NHTSA's docket. (Since this item is non-scannable, it cannot be placed in the DOT Dockets Management System (DMS). Instead a statement indicating where it may be viewed, *i.e.*, in NHTSA's docket, has been placed in the DMS.) Copies may also be obtained from Reprographic Technologies, 9000 Virginia Manor Road, Beltsville, MD 20705; Telephone: (301) 419–5070.

A draft user's manual has been placed in NHTSA's docket to assist commenters in evaluating the proposed drawing and specifications. The manual is similar to the user's manual specified by Part 572 for other dummies.

As with other dummies, NHTSA is proposing impact performance criteria to serve as calibration checks, and to further assure the kinematic uniformity of the dummy and the absence of

[2] Minutes of the meetings of the taskforce are located in NHTSA's docket, Room 5111, 400 Seventh St., SW, and are available for public inspection. The minutes address development of the entire family of Hybrid III dummies, including the six-year-old dummy that is the subject of a previous rulemaking.

[3] NHTSA may produce a digital description of the proposed dummy's external contours after the final rule has been adopted. If the agency produces a digital description, the document will be made available for reference in NHTSA's docket.

damage from previous use. The tests address head, neck, thorax and femur impact responses and stiffness assessments of the lumbar spine-abdomen area to torso flexion motion.

The agency is proposing generic specifications for all of the dummy-based sensors. For most earlier dummies, the agency specified sensors by make and model. However, NHTSA believes that approach is unnecessarily restrictive. Instead, the proposed specifications reflect the characteristics and expected performance response of the sensors that were used in NHTSA's dummy evaluation series and are identified by make and model in the above referenced technical report. Interested persons are encouraged to comment on the adequacy of the proposed specifications; potential impact on the measured test data, including the comparability of data using sensors manufactured by different companies; and issues related to calibration assurance tests.

NHTSA notes that the H-III5F dummy is the second of several new dummies it will propose to add to Part 572. The agency has already proposed incorporating the advanced 6-year old child dummy (63 FR 35170) and plans to propose adding the 3-year old child dummy and the CRABI 12-month old child dummy later this year. The agency intends to use these dummies in its rulemaking for advanced air bags. All of these dummies could be specified for use in a variety of potential Standard No. 208 tests, including out-of-position tests and/or various dynamic tests. The child dummies could also be specified for use in Standard No. 213 tests.

Historically NHTSA has required that the structural properties of a dummy satisfy the specifications set out in the applicable regulation in every respect both before and after its use in any test specified in a FMVSS. The text proposed in today's notice would remove the requirement that the H-III5F dummy meet these requirements after testing. The agency plans to make similar changes with respect to other Part 572 dummies.

NHTSA is concerned that the post-test calibration requirement could handicap and delay its ability to resolve a potential vehicle or motor vehicle equipment test failure solely because the post-test dummy might have experienced a component failure and might no longer conform to all of the specifications. On several occasions during the past few years, a dummy has been damaged during a compliance test such that it could not satisfy all of the post-test calibration requirements. Yet the damage to the dummy did not affect its ability to accurately measure the performance requirements of the standard. The agency is also concerned that the interaction between the vehicle or equipment and the dummy could be directly responsible for the dummy's inability to meet calibration requirements. In such an instance, the failure of the test dummy should not preclude the agency from seeking compliance action. Thus, NHTSA has tentatively concluded that removal of the post-calibration requirement would be in the public interest, since it would permit the agency to proceed with a compliance investigation in those cases where the test data indicate that the dummy measurements were not markedly affected by the dummy damage or that some aspect of vehicle or equipment design was responsible for the dummy failure. Alternatively, the post-test calibration requirement could be retained, but the inability of a dummy to meet the requirements could be presumed to be either irrelevant or the result of the vehicle or motor vehicle equipment test failure unless the vehicle or equipment manufacturer can show that a calibration failure adversely affected the test results. In either case, dummies would still be required to meet the pre-test calibration requirements before being used in subsequent tests. NHTSA seeks comment on this issue. The text proposed in today's notice would remove the requirement that the H–III5F dummy meet these requirements after testing. The agency plans to make similar changes with respect to other Part 572 dummies.

This notice only concerns the H–III5F dummy, and is limited to adding the dummy to Part 572. The issue of specifying the use of the H–III5F dummy as part of Standard No. 208 will be addressed in other rulemakings. However, since one of the primary purposes of adding the dummy to Part 572 is to enable it to be specified for use in the Federal motor vehicle safety standards, NHTSA encourages commenters to address its suitability for the types of tests discussed above. The agency also encourages commenters to address the suitability of the underlying tests used for NHTSA's assessment of dummy performance.[4]

Rulemaking Analyses and Notices

A. Executive Order 12866 and DOT Regulatory Policies and Procedures

NHTSA has considered the impact of this rulemaking action under Executive Order 12866 and the Department of Transportation's regulatory policies and procedures. This rulemaking document was not reviewed by the Office of Management and Budget under E.O. 12866, ''Regulatory Planning and Review.'' The rulemaking action has been determined not to be significant under the Department's regulatory policies and procedures.

This document proposes to amend 49 CFR Part 572 by adding design and performance specifications for a 5th percentile small adult female dummy which the agency may later separately propose for use in the Federal motor vehicle safety standards. If this proposed rule becomes final, it would affect only those businesses which choose to manufacture or test with the dummy. It does not impose any requirements on anyone.

The cost of an uninstrumented H–III5F dummy is approximately $33,400. Instrumentation would add $29,000 to $99,100 to the cost, depending on the amount of instrumentation.

Because the economic impacts of this proposal are so minimal, preparation of a full regulatory evaluation is not necessary.

B. Regulatory Flexibility Act

NHTSA has considered the effects of this rulemaking action under the Regulatory Flexibility Act (5 U.S.C. 601 *et seq.*) I hereby certify that the proposed amendment would not have a significant economic impact on a substantial number of small entities. The proposed amendment would not impose or rescind any requirements for anyone. Therefore, this proposal would not have a significant economic impact on a substantial number of small entities.

C. National Environmental Policy Act

NHTSA has analyzed this proposed amendment for the purposes of the National Environmental Policy Act and determined that it would not have any significant impact on the quality of the human environment.

D. Executive Order 12612 (Federalism)

The agency has analyzed this proposed amendment in accordance with the principles and criteria set forth in Executive Order 12612. NHTSA has determined that the proposed amendment does not have sufficient federalism implications to warrant the preparation of a Federalism Assessment.

Request for Comments

Interested persons are invited to submit comments on this proposal. Two copies should be submitted.

[4] See the technical report for test matrix.

All comments must not exceed 15 pages in length (49 CFR 553.21). Necessary attachments may be appended to these submissions without regard to the 15-page limit. This limitation is intended to encourage commenters to detail their primary arguments in a concise fashion.

If a commenter wishes to submit certain information under a claim of confidentiality, three copies of the complete submission, including purportedly confidential business information, should be submitted to the Chief Counsel, NHTSA, at the street address given above, and two copies from which the purportedly confidential information has been deleted should be submitted to the Docket Section. A request for confidentiality should be accompanied by a cover letter setting forth the information specified in the agency's confidential business information regulation. 49 CFR Part 512.

All comments received by NHTSA before the close of business on the comment closing date indicated above will be considered and will be available for examination in the docket at the above address both before and after that date. To the extent possible, comments filed after the closing date will also be considered. Comments received too late for consideration in regard to this action will be considered as suggestions for further rulemaking action. Comments will be available for inspection in the docket. NHTSA will continue to file relevant information as it becomes available in the docket after the closing date, and recommends that interested persons continue to examine the docket for new material.

Those persons desiring to be notified upon receipt of their comments in the rules docket should enclose a self-addressed, stamped postcard in the envelope with their comments. Upon receiving the comments, the docket supervisor will return the postcard by mail.

List of Subjects in 49 CFR Part 572

Motor vehicle safety.

In consideration of the foregoing, NHTSA proposes to amend 49 CFR Part 572 as follows:

PART 572—ANTHROPOMORPHIC TEST DUMMIES

1. The authority citation for part 572 would continue to read as follows:

Authority: 49 U.S.C 332, 30111, 30115, 30117, and 30166; delegation of authority at 49 CFR 1.50.

2. 49 CFR part 572 would be amended by adding a new subpart O, consisting of §§ 572.130 through 572.137, to read as follows:

Subpart O—Hybrid III 5th Percentile Female

Sec.
572.130 Incorporation by reference.
572.131 General description.
572.132 Head assembly and test procedure.
572.133 Neck assembly and test procedure.
572.134 Thorax assembly and test procedure
572.135 Upper and lower torse assemblies and torso flexion test procedure.
572.136 Knees and knee impact test procedure.
572.137 Test conditions and instrumentation.

Subpart O—Hybrid III 5th Percentile Female

§ 572.120 Incorporation by reference.

(a) The following materials are hereby incorporated in subpart O by reference:

(1) A drawings and specifications package entitled ''Parts List and Drawings for the Hybrid III 5th Percentile Female Dummy (August 1998)'';

(2) A user's manual entitled ''User's Manual for the Hybrid III 5th Percentile Female Dummy [a date will be inserted in the final rule]'';

(3) The Director of the Federal Register approved those materials incorporated by reference in accordance with 5 U.S.C. 552(a) and 1 CFR part 51. Copies of the materials may be inspected at NHTSA's Docket Section, 400 Seventh Street S.W., room 5109, Washington, DC, or at the Office of the Federal Register, 800 North Capitol Street, NW, Suite 700, Washington, DC.

(b) The drawings and specifications package referred to in paragraph (a)(1) of this section and the user's manual referred to in paragraph (a)(2) of this section are available from Reprographic Technologies, 9000 Virginia Manor Road, Beltsville, MD 20705 (301) 419–5070.

§ 572.131 General description.

(a) The Hybrid III type 5th percentile female size test dummy is defined by drawings and specifications which contain the following materials:

(1) Technical drawings and specifications package 880105–000, the titles of which are listed in Table A;

(2) Operation and Maintenance Manual (not available until final rule).

(b) The dummy assembly (P/N 880105–000) is made up of the component assemblies set out in Table A (June 1998):

TABLE A

Component assembly	Drawing No.
Head Assembly	880105–100X
Neck Assembly	880105–250
Upper Torso Assembly	880105–300
Lower Torso Assembly	880105–450
Leg Assembly	880105–560
Arm Assembly	880105–728

(c) Adjacent segments are joined in a manner such that, except for contacts existing under static conditions, there is no contact between metallic elements throughout the range of motion or under simulated crash impact conditions.

(d) The structural properties of the dummy are such that the dummy conforms to this Part in every respect before its use in any test similar to those specified in Standard 208, Occupant Crash Protection, and ISO Out-of-Position 1 and 2.

§ 572.132 Head assembly and test procedure

(a) *Head assembly.* The head consists of the assembly designated as 880105–100X, and 3 accelerometers (SA–572 S4) mounted in conformance to drawing 880105–000.

(b) When the head assembly described in paragraph (a) is dropped from a height of 376.0+/-1.0 mm (14.8+/-0.04 in) in accordance with paragraph (c) of this section, the peak resultant acceleration at the location of the accelerometers at the head CG shall not be less than 250 g's and more than 300 g's. The resultant acceleration vs. time history curve shall be unimodal; oscillations occurring after the main pulse shall be less than 10 percent of the peak resultant acceleration. The lateral acceleration shall not exceed 15 g's (zero to peak).

(c) *Head test procedure.* The test procedure for the head is as follows:

(1) Soak the head assembly in a controlled environment at any temperature between 18.9 and 25.6 °C (66 and 78 °F) and at any relative humidity between 10 and 70 percent for at least four hours prior to a test.

(2) Prior to the test, clean the impact surface of the skin and the impact plate surface with isopropyl alcohol, trichloroethane, or an equivalent. The skin of the head must be clean and dry for testing.

(3) Suspend and orient the head assembly as shown in 49 CFR 572.32, Figure 19 (10/1/97) with the lowest point on the forehead 376.0+/−1.0 mm (14.8 +/−0.04 in) from the impact surface. The 1.57 mm (0.062 in.) diameter holes located on either side of the dummy's head are used to ensure that the transverse axis of the head is level with respect to the impact surface.

(4) Drop the head assembly from the specified height by a means that ensures

a smooth, instant release onto a rigidly supported flat horizontal steel plate which is 51 mm (2 in) thick and 610 mm (24 in) square. The impact surface shall be dry and have a finish of not less than 0.2 microns (8 micro inches) (RMS) and not more than 2 microns (80 micro inches) (RMS).

(5) Allow at least 2 hours between successive tests on the same head.

§ 572.133 Neck assembly and test procedure.

(a) The neck assembly consists of the assembly of components designated in drawing P/N 880105–250.

(b) *Neck assembly.* When the head-neck assembly (head 880105–100X, neck 880105–250, bib simulator 880105–371, upper neck adjusting bracket 880105–207, lower neck adjusting bracket 880105–208, six axis neck transducer SA–572 S11, and either three accelerometers SA572 S4 or their equivalent installed in the head assembly as specified in 880105–100X) is tested according to the test procedure in 572.133(c), it shall have the following characteristics:

(1) *Flexion.* Plane D referenced in Figure O1 (attached), shall rotate in the direction of preimpact flight with respect to the pendulum's longitudinal centerline not less than 80 degrees and not more than 92 degrees. During this rotation interval, the peak moment measured by the neck transducer SA–572 S11 about the occipital condyle shall not be less than 69 Nm (51 ft-lb) and not more than 83 Nm (61 ft-lb). The moment shall be calculated by the following formula: Moment (Nm) = My − (0.01778m)×(Fx). The positive moment shall decay for the first time to 10 Nm between 80 ms and 100 ms.

(2) *Extension.* Plane D referenced in Figure O2 (attached), shall rotate in the direction of preimpact flight with respect to the pendulum's longitudinal centerline not less than 97 degrees and not more than 109 degrees. During this rotation interval, the peak moment measured by the neck transducer S–572 S11 about the occipital condyle shall not be more than −55 Nm (−41 ft-lb) and not less than −69 Nm (−51 ft-lb). The moment shall be calculated by the following formula: Moment (Nm) = My − (0.01778m)×(Fx). The negative moment shall decay for the first time to −10 Nm between 94 ms and 114ms.

(c) *Test Procedure.* The test procedure for the neck assembly is as follows:

(1) Soak the neck assembly in a controlled environment at any temperature between 20.6 and 22.2°C (69 and 72 F) and at any relative humidity between 10 and 70 percent for at least four hours prior to a test.

(2) Torque the jam nut 9000018 on the neck cable 880105–206 to 1.4 Nm (12 in-lbs).

(3) Mount the head-neck assembly defined in paragraph (b) of this section, on the pendulum described in 49 CFR 572.33, Figure 22 (10/1/97) (pendulum specifications) so that the midsagittal plane of the head is vertical and coincides with the plane of motion of the pendulum as shown in Figure O1 (attached) for flexion and Figure O2 (attached) for extension tests.

(4) Release the pendulum and allow it to fall freely from a height to achieve an impact velocity of 7.01+/−0.12 m/s (23.0 +/−0.4 ft/s) for flexion and 6.07 +/−0.12 m/s (19.9+/−0.4 ft/s) for extension tests.

(i) Time-zero is defined as the time of initial contact between the pendulum striker plate and the honeycomb material. All data channels should be at the zero level at this time.

(ii) Stop the pendulum from the initial velocity with an acceleration vs. time pulse which meets the velocity change as specified below. Integrate the pendulum acceleration data channel to obtain the velocity vs. time curve:

Time	Pendulum pulse			
	Flexion		Extension	
ms	m/s	ft/s	m/s	ft/s
10	2.1–2.5	6.9–8.2	1.5–1.9	4.9–6.2
20	4.0–5.0	13.1–16.4	3.1–3.9	10.2–12.8
30	5.8–7.0	19.0–23.0	4.6–5.6	15.1–18.4

§ 572.134 Thorax assembly and test procedure.

(a) The thorax consists of the part of the upper torso assembly designated as 880105–300.

(b) *Thorax assembly.* When the anterior surface of the thorax of a completely assembled dummy (880105–000) is impacted by a test probe conforming to § 572.137(a) at 6.71 +/−0.12 m/s (22.0 +/−0.4 ft/s) according to the test procedure in paragraph (c) of this section.

(1) The maximum sternum displacement relative to the spine, measured with the chest deflection transducer (SA–572 S51), shall not be less than 48 mm (1.9 in) and not more than 55 mm (2.2 in). During this displacement interval the peak force, measured by the probe in accordance with paragraph § 572.137, shall not be less than 3900 N (876 pounds) and not more than 4400 N (989 pounds), and the peak force at any time prior to reaching the maximum permissible sternum displacement shall not exceed by more than 5% the value of the peak force measured within the specified displacement limit.

(2) The internal hysteresis of the ribcage in each impact as determined by the plot of force vs. deflection in paragraph (b)(1) of this section shall be not less than 69 percent but not more than 85 percent.

(c) *Test procedure.* The test procedure for the thorax assembly is as follows:

(1) Soak the dummy in a controlled environment at a temperature between 20.6 and 22.2°C (69 and 72 F) and at any relative humidity between 10 and 70 percent for at least four hours prior to a test.

(2) Seat and orient the dummy, that wears light weight cotton stretch short sleeve shirt and above the knee pants on a seating surface without back support as shown in Figure O3, with the limbs extended horizontally and forward, parallel to the midsagittal plane, the midsagittal plane vertical within +/−1 degree and the ribs level in the anterior-poster and lateral directions within +/−0.5 degrees.

(3) Establish the impact point at the chest midsagittal plane so that the impact point of the longitudinal centerline of the probe is centered on the midsagittal plane of the dummy within +/−2.5 mm (0.1 in.) and is 12.7 +/−1.0 mm (0.5+/−0.04 in.) below the horizontal centerline of the No. 3 rib and is within 0.5 degrees of a horizontal line in the dummy's midsagittal plane.

(4) Adjust the dummy so that the tangent plane at the surface on the ribs immediately adjacent to the designated impact point is vertical and parallel to the face of the test probe.

(5) Impact the thorax with the test probe so that at the moment of contact

the probe's longitudinal center line falls within 2 degrees of a horizontal line in the dummy's midsagittal plane.

(6) Guide the test probe during impact so that there is no significant lateral, vertical or rotational movement.

(7) Allow at least 30 minutes between successive tests.

§ 572.135 Upper and lower torso assemblies and torso flexion test procedure.

(a) *Upper/lower torso assembly.* The test objective is to determine the stiffness effects of the lumbar spine 880105–1096 and abdominal insert 880105–434 on resistance to articulation between upper torso assembly 880105–300 and the lower torso assembly 880105–450.

(b) When the upper torso assembly of a seated dummy is subjected to a force continuously applied at the head to neck pivot pin level through a rigidly attached adaptor bracket as shown in Figure O4 according to the test procedure set out in paragraph (c) of this section, the lumbar spine-abdomen assembly shall:

(1) Flex by an amount that permits the upper torso assembly to rotate relative to the fixed seating reference surface by 45 degrees at which time the force level is not less than 289 N (65 pounds) and not more than 378 N (85 pounds), and

(2) Upon removal of the force the torso assembly returns to within 5 degrees of its initial position.

(c) *Test procedure.* The test procedure for the upper/lower torso assembly is as follows:

(1) Soak the dummy in a controlled environment at any temperature between 20.6° and 22°C (69 and 72 F) and at any relative humidity between 10 and 70 percent for at least 4 hours prior to a test.

(2) Assemble the complete dummy (with or without the legs below the femurs) and attach to the fixture in a seated posture as shown in Figure O4.

(3) Secure the pelvis to the fixture at the pelvis instrument cavity rear face by threading four ¼ in cap screws into the available threaded attachment holes. Tighten the cap screws so that the pelvis casting is rigidly affixed to the test fixture and the pelvic-lumbar joining surface is horizontal.

(4) Attach a lightweight, rigid loading adaptor bracket (not to exceed 0.77 kg (1.7 lbs)) to the posterior of the spine at the machined surface of the upper instrumentation cavity as shown in Figure O4. The loading bracket is designed such that the point of load application coincides with the longitudinal axis of the head-neck condyle pin and also provides means for measuring the rotation of the upper torso.

(5) Inspect and adjust, if necessary, the seating of the abdominal insert within the pelvis cavity and with respect to the torso flesh to assure uniform fit and clearances.

(6) Attach means of loading the dummy through the point of load application as shown in Figure O4.

(7) The initial orientation of the angle reference plane of the seated, unsupported dummy shall not exceed 20 degrees of flexion as shown in Figure O4. The angle reference plane is defined by the transverse plane the machined surface of the upper thoracic instrumentation cavity makes with respect to the vertical as shown in Figure O4.

(8) Apply a forward force in the midsagittal plane through the adaptor bracket as shown in Figure O4 at any upper torso deflection rate between 0.5 and 1.5 degrees per second, until the angle reference plane reaches 45 degrees of flexion with the applied force at 59 degrees from horizontal.

(9) Continue to apply a force sufficient to maintain 45 degrees of flexion for 10 seconds, and record the highest applied force during the 10 seconds period.

(10) Release all force as rapidly as possible, and measure the return angle with respect to the initial angle reference plane as defined in paragraph (c)(6) of this section 3 minutes after the release.

§ 572.136 Knees and knee impact test procedure.

(a) The knee assembly is part of the leg assembly shown in drawing 880105–560.

(b) *Knee assembly.* When the knee assembly (knee cap 880105–560 −1(left) −2 (right), knee skin flesh P/N 880105–508, knee flesh insert 880105–511, lower leg 105–4014, and femur load transducer SA–572 S14 or its structural replacement 78051–319 is tested according to the test procedure in 572.137(c), the peak resistance force as measured with the test probe mounted accelerometer shall be not less than 3360 N (755 lbs) but not more than 4080 N (916 lbs).

(c) *Test procedure.* The test procedure for the knee assembly is as follows:

(1) Soak the knee assembly in a controlled environment at any temperature between 18.9 and 25.6°C (66 to 78 F) and at any relative humidity between 10 and 70 percent for at least four hours prior to a test.

(2) Mount the test material and secure it to a rigid test fixture as shown in Figure O5. No contact is permitted between any part of the foot and tibia and any exterior surface.

(3) Align the test probe so that throughout its stroke and at contact with the knee it is within 2 deg. of horizontal and collinear with the longitudinal centerline of the femur.

(4) Guide the pendulum so that there is no significant lateral vertical or rotational movement at time zero. Time-zero is defined as the time of initial contact between the impactor and the knee.

(5) The test probe velocity at the time of contact shall be 2.1+/−0.03 m/s (6.9+/−0.1 ft/s).

§ 572.137 Test conditions and instrumentation.

(a) The test probe for thoracic impacts is a 152.4+/−0.25 mm (6.00+/−0.01 in.) diameter cylinder that weighs 13.97+/−0.01 kg (30.8+/−0.02 lb) including instrumentation. Its impacting end has a flat right angle face that is rigid and has an edge radius of 12.7 mm (0.5 in.). The test probe has an accelerometer mounted on the end opposite from impact with its sensitive axis collinear with the longitudinal centerline of the cylinder.

(b) The test probe for knee impact tests is a 76.2+/−0.25mm (3.0+/−0.01 in.) diameter cylinder that weighs 2.99+/−.01 kg (6.6+/−0.02 lbs) including instrumentation. Its impacting end has a flat right angle face that is rigid and has an edge radius of 2 mm (0.08 in.) max. The test probe has an accelerometer mounted on the end opposite from impact with its sensitive axis collinear to the longitudinal centerline of the cylinder.

(c) Head accelerometers shall have dimensions, response characteristics, and sensitive mass locations specified in drawing SA–572 S4 or equivalent and be mounted in the head as shown in drawing 880105–000 sheet 3.

(d) The neck force/moment transducer shall have the dimensions, response characteristics, and sensitive axis locations specified in drawing SA–572 S11 or its equivalent and be mounted in the head-neck assembly as shown in drawing 880105–100X sheet 3.

(e) The thorax accelerometers shall have the dimensions, response characteristics, and sensitive mass locations specified in drawing SA–572 S4, or its equivalent and are mounted in the upper torso assembly in triaxial configuration within the spine box instrumentation cavity and as options in uniaxial for-and-aft oriented configuration as corresponding pairs in three locations on the sternum on and at the spine box of the upper torso

assembly as shown in 880105–000 sheet 3.

(f) The optional lumbar spine force-moment transducer shall have the dimensions, response characteristics, and sensitive axis locations specified in drawing SA–572 S15 or its equivalent and be mounted in the lower torso assembly as shown in drawing P/N 880105–450.

(g) The optional iliac spine force transducers shall have the dimensions and response characteristics specified in drawing SA–572 S16 or equivalent and be mounted in the torso assembly as shown P/N 880105–450.

(h) The pelvis accelerometers shall have the dimensions, response characteristics, and sensitive mass locations specified in drawing SA–572 S4 or its equivalent and be mounted in the torso assembly in triaxial configuration in the pelvis bone as shown P/N 880105–000 sheet 3.

(i) The femur force transducer shall have the dimensions and response characteristics specified in drawing SA–572 S14 or its equivalent and be mounted in the leg assembly as shown in 880105–500 and –501.

(j) The outputs of acceleration and force-sensing devices installed in the dummy and in the test apparatus specified by this part are recorded in individual data channels that conform to the requirements of SAE Recommended Practice J211, Rev. Mar 95 ''Instrumentation for lmpact Tests,'' with channel classes as follows:

(1) Head acceleration—Class 1000
(2) Neck:
  (i) Forces—Class 1000
  (ii) Moments—Class 600
  (iii) pendulum acceleration—Class 180
(3) Thorax:
  (i) Rib acceleration—Class 1000
  (ii) Spine and pendulum accelerations—Class 180
  (iii) Sternum deflection—Class 600
(4) Lumbar:
  (i) Forces—Class 1000
  (ii) Moments—Class 1000
(5) Pelvis accelerations—Class 1000
(6) Femur forces—Class 600

(k) Coordinate signs for instrumentation polarity conform to the Sign Convention For Vehicle Crash Testing, Surface Vehicle Information Report, SAE J1733, 1994–12.

(l) The mountings for sensing devices shall have no resonance frequency within range of 3 times the frequency range of the applicable channel class.

(m) Limb joints shall be set at 1g, barely restraining the weight of the limb when it is extended horizontally. The force required to move a limb segment shall not exceed 2g throughout the range of limb motion.

(n) Performance tests of the same component, segment, assembly, or fully assembled dummy shall be separated in time by period of not less than 30 minutes unless otherwise noted.

(o) Surfaces of dummy components are not painted except as specified in this part or in drawings subtended by this part.

BILLING CODE 4910–59–U

FIGURE 01.
NECK FLEXION TEST SETUP SPECIFICATIONS

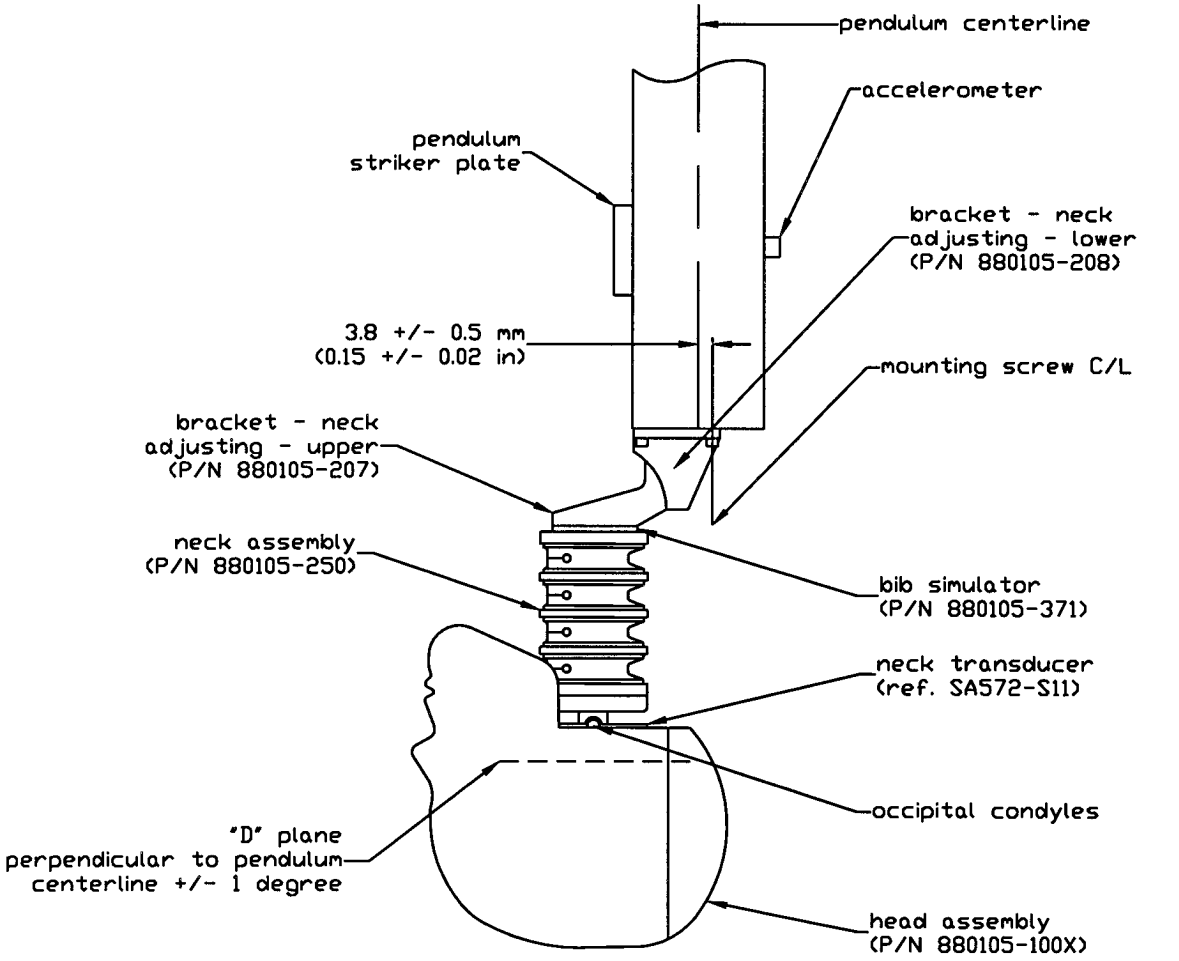

FIGURE 02.
NECK EXTENSION TEST SETUP SPECIFICATIONS

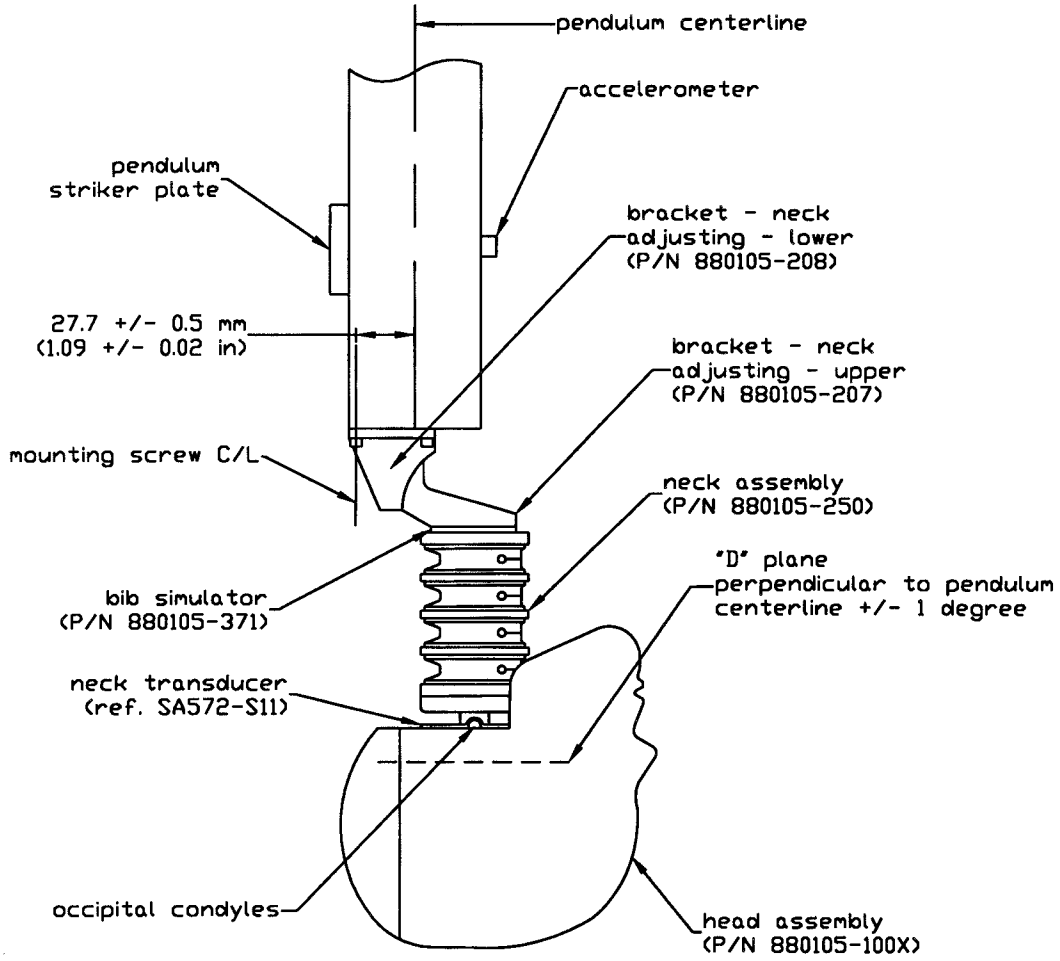

FIGURE 03.
THORAX IMPACT TEST SETUP SPECIFICATIONS

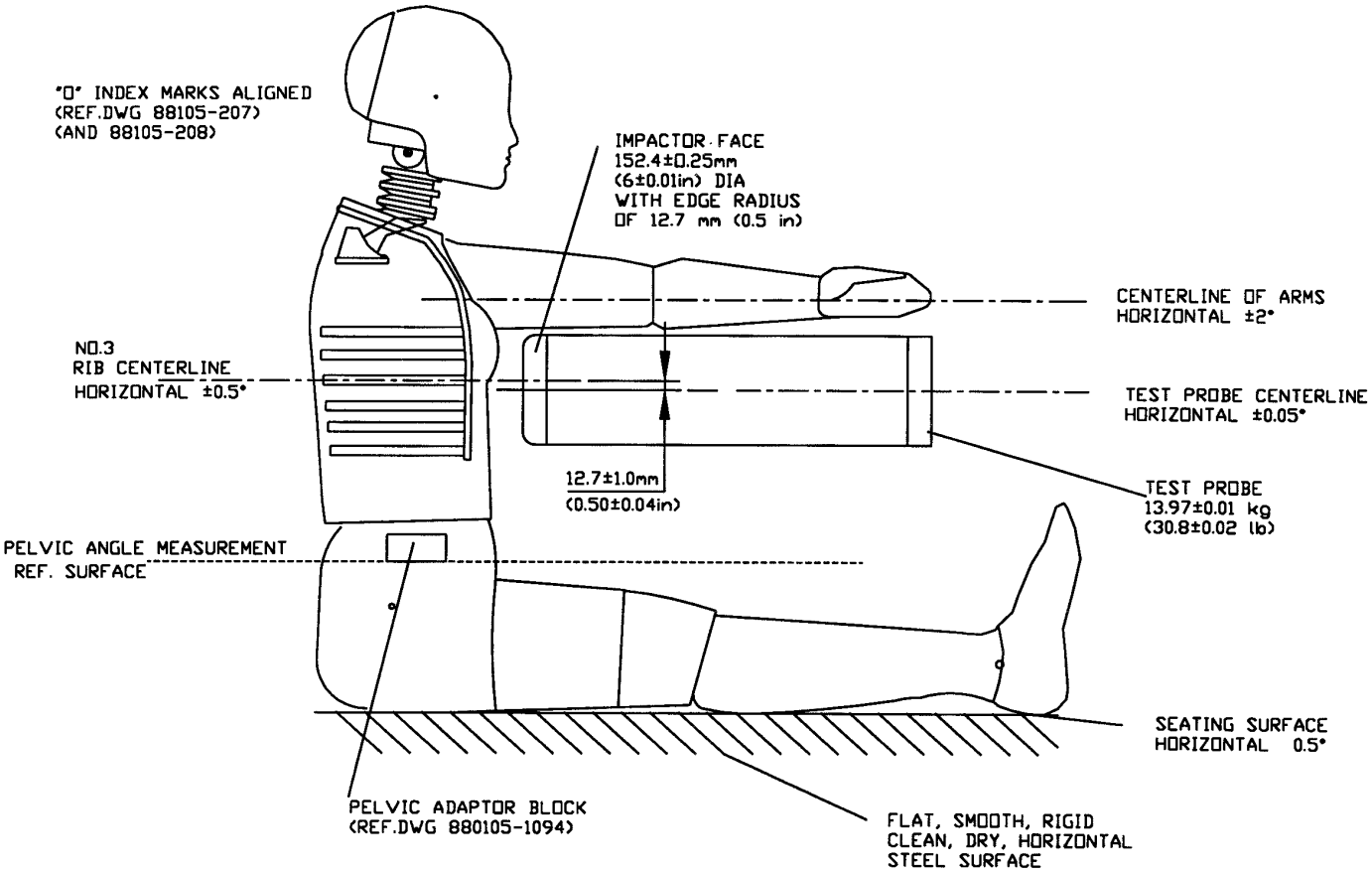

FIGURE 04.
TORSO FLEXION TEST

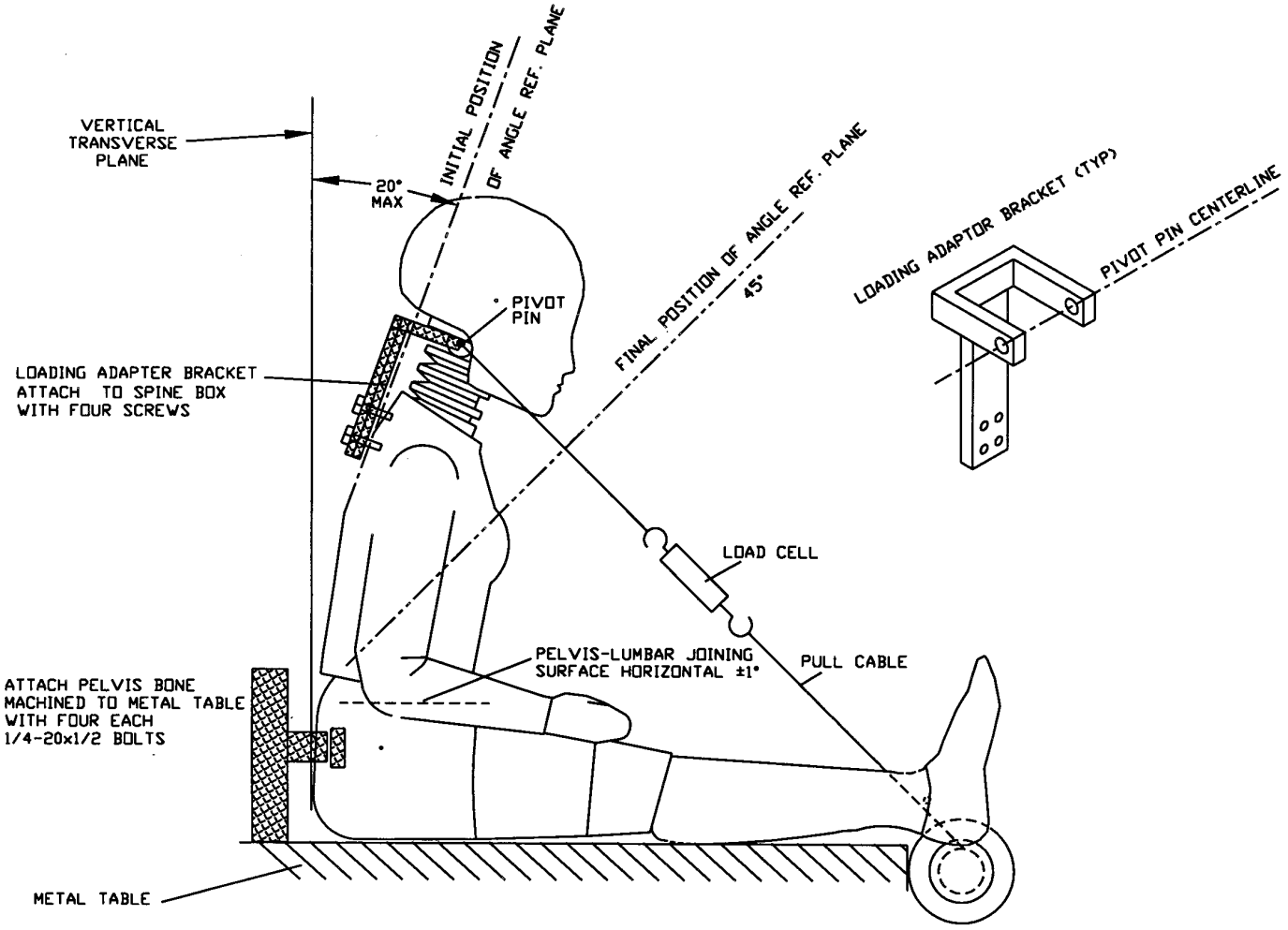

Figure 05. Knee Impact Test Setup Specification

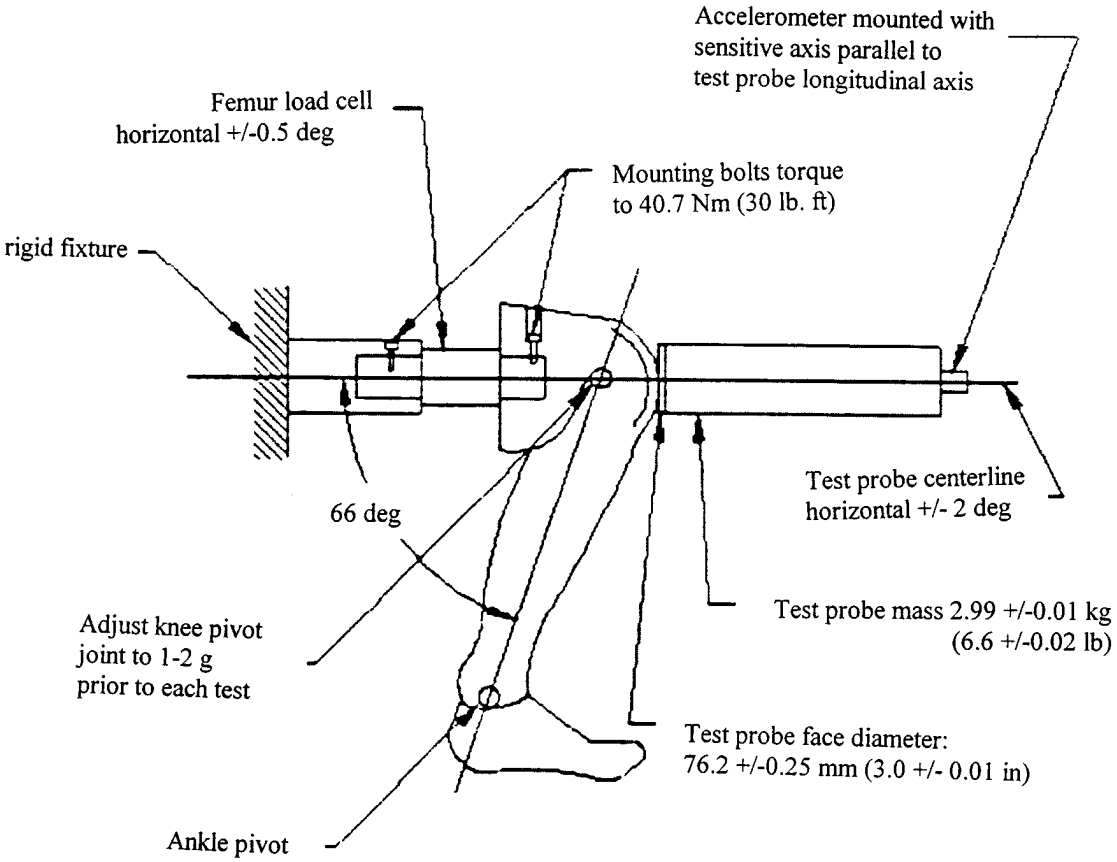

Issued on: August 31, 1998.

L. Robert Shelton,

Associate Administrator for Safety Performance Standards.

[FR Doc. 98–23795 Filed 9–2–98; 8:45 am]

BILLING CODE 4910–59–C

DEPARTMENT OF COMMERCE

National Oceanic and Atmospheric Administration

50 CFR Part 679

[Docket No. 980817221–8221–01; I.D. 072898A]

RIN 0648–AL22

Fisheries of the Exclusive Economic Zone Off Alaska; Western Alaska Community Development Quota Program

AGENCY: National Marine Fisheries Service (NMFS), National Oceanic and Atmospheric Administration (NOAA), Commerce.

ACTION: Proposed rule; request for comments.

SUMMARY: NMFS proposes regulations to implement Amendment 45 to the Fishery Management Plan for the Groundfish Fishery of the Bering Sea and Aleutian Islands Area (FMP). Amendment 45 would reauthorize the allocation of 7.5 percent of the pollock total allowable catch (TAC) to the Western Alaska Community Development Quota (CDQ) Program. This proposed action is intended to further the objectives of the FMP.

DATES: Comments must be received by October 19, 1998.

ADDRESSES: Comments may be sent to Sue Salveson, Assistant Regional Administrator, Sustainable Fisheries Division, Alaska Region, NMFS, P.O. Box 21668, Juneau, AK 99802, Attn: Lori Gravel, or delivered to the Federal Building, 709 West 9th Street, Juneau, AK. Copies of the Environmental Assessment/Regulatory Impact Review/Initial Regulatory Flexibility Analysis (EA/RIR/IRFA) prepared for this action may be obtained from the same address or by calling the Alaska Region, NMFS, at 907–586–7228.

FOR FURTHER INFORMATION CONTACT: Sally Bibb, 907–586–7228.

SUPPLEMENTARY INFORMATION:

Management Background and Need for Action

NMFS manages fishing for groundfish by U.S. vessels in the exclusive economic zone of the Bering Sea and Aleutian Islands management area (BSAI) according to the FMP. The North Pacific Fishery Management Council (Council) prepared the FMP under authority of the Magnuson-Stevens Fishery Conservation and Management Act (Magnuson-Stevens Act). Regulations governing fishing by U.S. vessels appear at 50 CFR parts 600 and 679.

The Council has submitted Amendment 45 for Secretarial review. NMFS published a Notice of Availability of the FMP amendment at 63 FR 41782 (August 5, 1998) and invited comments on the FMP amendment through October 4, 1998. All written comments received by October 4, 1998, whether specifically directed to the FMP amendment, the proposed rule, or both, will be considered in the approval/disapproval decision on the FMP amendment.

The Council initially recommended the allocation of 7.5 percent of the BSAI pollock TAC to the CDQ Program as part of Amendment 18 to the FMP, which allocated pollock among catcher vessels delivering to the inshore and offshore processing sectors and the CDQ program for the period 1992 through 1995. The Council recommended Amendment 18 in 1991, and the Secretary approved it on March 4, 1992. NMFS published regulations implementing Amendment 18 in the **Federal Register** on June 3, 1992 (57 FR 23321) and October 7, 1992 (57 FR 46139). In June 1995, the Council recommended Amendment 38 to the FMP, which extended the inshore/offshore/CDQ allocation of pollock through December 31, 1998. The Secretary approved Amendment 38 on November 28, 1995, and NMFS published implementing regulations in the **Federal Register** on December 12, 1995 (60 FR 63654).

The 1996 amendments to section 305 of the Magnuson-Stevens Act require the Council and the Secretary to ''establish a western Alaska community development quota program under which a percentage of the total allowable catch of any Bering Sea fishery is allocated to the program.'' While this sentence requires the Secretary to establish a single, stand-alone western Alaska CDQ program, it does not automatically extend the pollock CDQ allocation beyond the current expiration date of December 31, 1998. To continue the allocation of pollock to the CDQ program, the Council must recommend, and the Secretary must approve, an amendment to the FMP.

At its meeting in April 1998, the Council considered an initial EA/RIR/IRFA analyzing two alternatives. Alternative 1 (no action) would allow the pollock CDQ allocation to expire on December 31, 1998. Alternative 2 would permanently extend the 7.5 percent allocation of the pollock TAC to the CDQ program. The Council decided to no longer link the pollock CDQ allocation to the inshore/offshore allocation of pollock, and to extend the allocation permanently.

The Council took final action on proposed Amendment 45 in June 1998, by selecting Alternative 2 as the preferred alternative. In making this decision, the Council considered the analysis of the economic impacts of the first 6 years of the pollock CDQ program in western Alaska. The information contained in, and the conclusions of, this analysis are summarized here.

The allocation of pollock TAC to the CDQ program from 1992 through 1998 has been instrumental in providing the revenues, employment, and training benefits to achieve the Council's goals for the CDQ program when it was initially established. These goals are to help western Alaska communities to develop and support commercial fishery activities that result in ongoing, regionally based commercial fisheries or related businesses. Six CDQ groups representing 56 western Alaska communities have earned over $20 million per year from contracts with their industry partners that harvest the pollock CDQ quotas on behalf of the CDQ groups. Since 1993, the groups' net income has averaged 45 percent of revenues. The value of the CDQ groups' equity ownership in fishing vessels, on-shore development projects, loan portfolios, and Individual Fishing Quota holdings has increased an average of 37 percent per year since 1992, and totaled approximately $64 million in 1997. Finally, the pollock CDQ allocations have led to training and employment opportunities for community residents. The EA/RIR/IRFA estimates that in 1997, over 200 people from CDQ communities were employed directly in the pollock harvesting and processing industry, and a total of about 1,200 CDQ program related jobs had been created. These jobs are in CDQ program management (6 percent of jobs), pollock harvesting and processing (27 percent), other fisheries harvesting and processing (50 percent), and other employment (17 percent). Additional details on development projects, revenues, investments, training, and employment due to the pollock CDQ program are in the EA/RIR/IRFA.

The Council also considered that not allocating pollock to the CDQ program would increase the amount of pollock available to the vessels and processors participating in the non-CDQ groundfish fisheries in the BSAI. However, the Council determined that the original goals of CDQ program were being met successfully and that the benefits provided to western Alaska communities justified continued

allocation of 7.5 percent of the pollock TAC to the CDQ Program.

This proposed rule would make the following changes in groundfish fishery regulations at 50 CFR part 679:

1. Revise § 679.20(b)(1)(iii) and remove paragraph (a) in § 679.31 so that the pollock CDQ reserve would no longer be specified separately from the other groundfish TAC species or species groups. The allocation of pollock and establishment of the pollock CDQ reserve would be conducted in the same manner as all other groundfish CDQ reserves (except fixed gear sablefish) that are established through an allocation of one half of the reserve (7.5 percent of the TAC) for that species or species group.

2. Renumber the paragraphs in § 679.31 to adjust for the removal of paragraph (a).

3. Revise the new paragraph (a) on the halibut CDQ reserves to change the phrase ''specified in paragraph (b) of this section'' to read ''specified in this section.''

4. Correct cross references in the definitions of ''Halibut CDQ reserve'', ''PSQ allocation'', and ''PSQ species.''

5. Revise the definitions for ''Community Development Quota (CDQ)'' and ''CDQ reserve'' so that they apply to any CDQ species (groundfish, halibut, or crab) rather than to groundfish CDQ only.

6. Rename the definition currently called ''Sablefish CDQ reserve'' to the ''Fixed gear sablefish CDQ reserve'' to more correctly identify this reserve.

7. Correct a cross reference to the newly renumbered CDQ reserves in the general CDQ regulations at § 679.30(a)(4).

Classification

At this time, NMFS has not determined that the FMP amendment this rule would implement is consistent with the national standards of the Magnuson-Stevens Act and other applicable laws. NMFS, in making that determination, will take into account the data, views, and comments received during the comment period.

The Council prepared an initial regulatory flexibility analysis that describes the impact this proposed rule, if adopted, would have on small entities. This preamble summarizes and supplements the Council's IRFA. The analysis estimates that the total universe of entities affected by regulations governing the BSAI pollock fishery is 249. Of these, 130 are small entities. The total universe is comprised of six CDQ groups, 56 western Alaska communities eligible for the CDQ program, five communities whose residents participate in the BSAI pollock fisheries but are not eligible for the CDQ program, 140 catcher vessels using trawl gear, 31 catcher/processors using trawl gear, three motherships, and eight shoreside processing plants. The small entities are the six CDQ groups, the 56 western Alaska communities eligible for the CDQ program, four of the Alaskan communities whose residents participate in the BSAI pollock fisheries but are not eligible for the CDQ program, and 64 of the catcher vessels. This action would benefit the small entities that receive the pollock allocation, while having a negative impact on those that do not.

The 64 catcher vessels participating in the BSAI pollock fisheries would experience negative economic impacts in that 7.5 percent of the pollock TAC would not be available through the open access fishery. These boats might be able to fish for the pollock by entering contracts with the CDQ groups, but profits would be reduced by the cost of the contract. Thus, a 7.5 percent reduction in the pollock TAC may reduce the annual gross revenues of these vessel owners by more than 5 percent relative to the alternative of not allocating pollock to the CDQ program. The impact of the pollock CDQ allocation on the four Alaskan non-CDQ communities (Unalaska, Sand Point, King Cove, and Kodiak) is not known. Because the CDQ allocation results in a shift in who can catch a certain amount of pollock, to the extent that the non-CDQ communities would have had an opportunity to benefit from the open access pollock community, the CDQ allocation reduces that opportunity. While it is impossible to quantify the amount of loss to these communities, it is possible that losses would be significant. The 64 catcher vessels and four non-CDQ communities represent 52 percent of the small entities in the BSAI pollock fisheries.

NMFS data indicate that 7.5 percent of the pollock TAC yields an average of $2 million in wages and $10.2 million net income on annual revenues of nearly $20 million to the CDQ groups. These direct benefits likely understate total economic benefits to the CDQ groups because they do not include the indirect benefits generated from the development projects undertaken by the program. These direct and indirect impacts generated by the program represent a differentially higher economic impact when compared with other regions of the State of Alaska and with the United States in general because of the relative absence of alternative economic bases in these communities.

The 64 independent catcher-boats appear to be the only small business entities participating in the BSAI pollock fishery. The allocation of 7.5 percent of the pollock TAC to the CDQ communities reduces the potential harvest by the 64 vessels and may reduce their annual gross revenues by more than 5 percent when comparing the 7.5 percent allocation alternative with the alternative that would not reauthorize the allocation and allow it to expire at the end of 1998. In addition to the 64 catcher boats, the four non-CDQ communities (Unalaska, Sand Point, King Cove, and Kodiak) could experience a significant loss in annual revenue because CDQ pollock may be processed at plants other than those used by vessels participating in the open access fisheries.

NMFS considered two alternatives that could have minimized economic impacts on the small entities negatively affected by this action. The first alternative would be to allocate 3.5 percent of pollock TAC to the CDQ reserve. Although this alternative would benefit the small entities not receiving CDQ allocation, the benefits accruing to the 56 CDQ communities would be considerably less. The alternatives that those communities have for generating income and investment are so small that the reduction from 7.5 percent to 3.5 percent reserve would be likely to produce significant negative economic impacts on these small entities. The trade off is clear; by reserving 3.5 percent instead of 7.5 percent, the catcher vessels gain at the expense of the CDQ communities. However, because of the relative absence of alternative economic bases in the CDQ communities, those communities will experience a relatively greater economic impact than would other regions of the State and the country in general.

The second alternative would be to let the present reserve of 7.5 percent of pollock TAC expire at the end of 1998. This action would result in a further shift of impacts from one set of small entities to another. It would benefit the non-CDQ participants in the fishery while cutting revenues of the CDQ groups.

Because the CDQ program is allocative by nature, any approved alternative will affect small entities. If the 7.5 percent allocation alternative were found to be inconsistent with the Magnuson-Stevens Act, NMFS could only disapprove it. Reconsideration of the 3.5 percent or other allocation alternatives by the Council and the public would be time consuming and disruptive to the ongoing CDQ program. Because this rule is an allocation from

one group of small entities to another, the Council weighed the economic and social effects and selected its preferred alternative as a legal alternative for achieving its statutory objective of allocating the TAC of pollock in the Bering Sea and Aleutian Islands fishery to the CDQ program.

A copy of the analysis is available from NMFS (See **ADDRESSES**).

This proposed rule has been determined to be not significant for purposes of E.O. 12866.

List of Subjects in 50 CFR Part 679

Alaska, Fisheries, Recordkeeping and reporting requirements

Dated: August 28, 1998.

Hilda Diaz-Soltero,

Acting Assistant Administrator for Fisheries, National Marine Fisheries Service.

For the reasons set out in the preamble, 50 CFR part 679 is proposed to be amended as follows:

PART 679—FISHERIES OF THE EXCLUSIVE ECONOMIC ZONE OFF ALASKA

1. The authority citation for part 679 continues to read as follows:

Authority: 16 U.S.C. 773 *et seq.*, 1801 *et seq.* and 3631 *et seq.*

2. In § 679.2 the definition for ''Sablefish CDQ reserve'' is removed; the definitions for ''Community Development Quota (CDQ)'', ''CDQ allocation'', ''Halibut CDQ reserve'', ''PSQ allocation'', and ''PSQ species'' are revised; and a new definition for ''Fixed gear sablefish CDQ reserve'' is added in alphabetical order to read as follows:

§ 679.2 Definitions.

* * * * *

CDQ allocation means a percentage of a CDQ reserve specified under § 679.31 that is assigned to a CDQ group when NMFS approves a proposed CDP.

* * * * *

Community Development Quota (CDQ) means the amount of a CDQ species established under § 679.31 that is allocated to the CDQ program.

* * * * *

Fixed gear sablefish CDQ reserve means 20 percent of the sablefish fixed gear TAC for each subarea in the BSAI for which a sablefish TAC is specified under § 679.20(b)(iii)(B). See also § 679.31(b).

* * * * *

Halibut CDQ reserve means the amount of the halibut catch limit for IPHC regulatory areas 4B, 4C, 4D, and 4E that is reserved for the halibut CDQ program under § 679.31(a).

* * * * *

PSQ allocation means a percentage of a PSQ reserve specified under § 679.21(e)(1)(i) and (e)(2)(ii) that is assigned to a CDQ group when NMFS approves a proposed CDP. See also § 679.31(d).

PSQ species means any species that has been assigned to a PSQ reserve under § 679.21(e)(1)(i) and (e)(2)(ii) for purposes of the CDQ program. See also § 679.31(d).

* * * * *

3. In § 679.20, paragraph (b)(1)(iii)(A) is revised to read as follows:

§ 679.20 General limitations.

* * * * *

(b) * * *

(1) * * *

(iii) *CDQ reserve*—(A) *Groundfish CDQ reserve*. One half of the nonspecified reserve established by paragraph (b)(1)(i) of this section is apportioned to the groundfish CDQ reserve.

* * * * *

4. In § 679.30, paragraph (a)(4) is revised to read as follows:

§ 679.30 General CDQ regulations.

(a) * * *

(4) *Request for CDQ and PSQ allocations*. A list of the percentage of each CDQ reserve and PSQ reserve, as described at § 679.31(a) through (d), that is being requested. The request for allocations of CDQ and PSQ must identify percentage allocations requested for CDQ fisheries identified by the primary target species of the fishery as defined by the qualified applicant and the gear types of the vessels that will be used to harvest the catch.

* * * * *

5. In § 679.31, paragraph (a) is removed and paragraphs (b) through (g) are redesignated as paragraphs (a) through (f). The newly designated paragraph (a)(1) is revised to read as follows:

§ 679.31 CDQ reserves.

* * * * *

(a) *Halibut CDQ reserve*. (1) NMFS will annually withhold from IFQ allocation the proportions of the halibut catch limit that are specified in this section for use as a CDQ reserve.

* * * * *

[FR Doc. 98–23797 Filed 9–2–98; 8:45 am]

BILLING CODE 3510–22–F

Notices

Federal Register
Vol. 63, No. 171
Thursday, September 3, 1998

This section of the FEDERAL REGISTER contains documents other than rules or proposed rules that are applicable to the public. Notices of hearings and investigations, committee meetings, agency decisions and rulings, delegations of authority, filing of petitions and applications and agency statements of organization and functions are examples of documents appearing in this section.

DEPARTMENT OF AGRICULTURE

Forest Service

California Coast Province Advisory Committee (PAC)

AGENCY: Forest Service, USDA.

ACTION: Notice of meeting.

SUMMARY: The California Coast Province Advisory Committee (PAC) will meet on September 18, 1998, at the Town Hall in Ft. Bragg, CA. The meeting will be held from 8:00 a.m. to 4:30 p.m. The Town Hall is located at 363 No. Main St. in Ft. Bragg. Agenda items to be covered include: (1) U.S. Fish and Wildlife Service Jobs in the Woods requests for proposals; (2) Presentation on the Blands Timber Sale on the Mendocino National Forest; (3) Coho Subcommittee direction; (4) Presentation on U.S. Army Corps of Engineers Russian River watershed project planning; (5) Subcommittee reports and recommendations (Coho, PAC/SCERT, Monitoring); (6) Presentation on lawsuit of 13 plaintiffs vs. the U.S. Forest Service and Bureau of Land Management concerning implementation of the Northwest Forest Plan; (7) Joint 3 PAC meeting follow-up on priority action items identified at the May 28–29 PAC meeting; and (8) Open public forum. All California Coast Province Advisory Committee meetings are open to the public. Interested citizens are encouraged to attend.

FOR FURTHER INFORMATION CONTACT:

Direct questions regarding this meeting to Daniel Chisholm, USDA, Forest Supervisor, Mendocino National Forest, 825 N. Humboldt Avenue, Willows, CA 95988, (530) 934–3316 or Phebe Brown, Province Coordinator, USDA, Mendocino National Forest, 825 N. Humboldt Avenue, Willows, CA 95988, (530) 934–3316.

Dated: August 26, 1998.

Daniel K. Chisholm,

Forest Supervisor.

[FR Doc. 98–23689 Filed 9–2–98; 8:45 am]

BILLING CODE 3410–11–M

DEPARTMENT OF AGRICULTURE

Grain Inspection, Packers and Stockyards Administration

Deposting of Stockyards

Notice is hereby given that the livestock markets named herein, originally posted on the dates specified below as being subject to the Packers and Stockyards Act, 1921, as amended (7 U.S.C. 181 *et seq.*), no longer come within the definition of a stockyard under the Act and are therefore no longer subject to the provisions of the Act.

	Facility No., name, and location of stockyard	Date of posting
IL–106	Bloomington Livestock Auction, Bloomington, Illinois.	April 12, 1960.
IL–130	Warren County Livestock, Monmouth, Illinois.	December 1, 1959.
IL–136	Olney Livestock, Inc., Olney, Illinois.	November 20, 1959.
IL–139	Interstate Producers Livestock, Association, Pana, Illinois.	November 19, 1959.
IN–101	Geneva-Berne Livestock Sales Company, Berne, Indiana.	May 5, 1959.
IN–109	Evansville Livestock Market, Inc., Evansville, Indiana.	November 1, 1921.
IN–112	Quality Dairy Sales Arena, Goshen, Indiana.	June 17, 1959.
IN–114	Decatur County Livestock, Greensburg, Indiana.	April 21, 1959.
IN–135	Bobby Lamb Feeder Pigs II, Royal Center, Indiana.	June 11, 1959.
IN–160	Evansville Livestock Market, Inc., Loogootee, Indiana.	May 29, 1985.
IN–161	Bobby Lamb Feeder Pigs, Sedalia, Indiana.	April 23, 1986.
KY–115	Green County Stockyards, Inc., Greensburg, Kentucky.	December 19, 1959.
KY–133	Graves County Livestock Company, Mayfield, Kentucky.	December 9, 1959.
KY–157	Wayne County Feeder Pig Market, Inc., Monticello, Kentucky.	September 19, 1972.
KY–169	Hart County Stockyards, Munfordville, Kentucky.	July 16, 1982.
MI–108	Michigan Livestock Exchange, Cassopolis, Michigan.	April 21, 1959.
MI–120	Hopkins Livestock Auction Yards, Hopkins, Michigan.	April 27, 1959.
MI–128	Equity Livestock Auction Market, Menominee, Michigan.	May 5, 1959.
MI–148	Pitchfork Livestock Exchange, Alpena, Michigan.	March 30, 1990.
OH–123	Peoples Livestock Exchange, Greenville, Ohio.	June 4, 1959.
OH–126	Kenton Farmers Market, Kenton, Ohio.	June 3, 1959.
OH–129	Marietta Livestock Sales Co., Marietta, Ohio.	June 2, 1959.
OH–160	Michigan Livestock Exchange, Columbus Grove, Ohio.	July 6, 1994.
NC–169	North Carolina Horse Auction, Goldston, North Carolina.	May 9, 1996.
VA–156	Culpeper Agricultural Enterprise, Inc., Culpeper, Virginia.	August 18, 1986.

This notice is in the nature of a change relieving a restriction and, thus, may be made effective in less than 30 days after publication in the **Federal Register** without prior notice or other public procedure. This notice is given pursuant to section 302 of the Packers and Stockyards Act (7 U.S.C. 202) and

is effective upon publication in the **Federal Register**.

Done at Washington, DC this 27th day of August 1998.

Warren P. Preston,

Acting Director, Office of Policy Litigation/ Support, Packers and Stockyards Programs.

[FR Doc. 98–23709 Filed 9–2–98; 8:45 am]

BILLING CODE 3410–EN–P

DEPARTMENT OF AGRICULTURE

Grain Inspection, Packers and Stockyards Administration

Posting of Stockyards

Pursuant to the authority provided under Section 302 of the Packers and Stockyards Act (7 U.S.C. 202), it was ascertained that the livestock market named below is a stockyard as defined by Section 302 (a). Notice was given to the stockyard owner and to the public as required by Section 302 (b), by posting notice at the stockyard on the date specified below, that the stockyard is subject to the provisions of the Packers and Stockyards Act, 1921, as amended (7 U.S.C. 181 *et seq.*).

Facility No., name, and location of stockyard	Date of posting
NM–123, Southwest Livestock Auction, Los Lunas, New Mexico.	Aug. 12, 1998

Done at Washington, D.C. this 28th day of August 1998.

Daniel L. Van Ackeren,

Director, Office of Policy/Litigation Support, Packers and Stockyards Programs.

[FR Doc. 98–23791 Filed 9–2–98; 8:45 am]

BILLING CODE 3410–EN–P

BROADCASTING BOARD OF GOVERNORS

Sunshine Act Meeting

DATE AND TIME: September 15, 1998; 9:30 a.m.

PLACE: Cohen Building, Room 3321, 330 Independence Ave., S.W., Washington, D.C. 20547.

CLOSED MEETING: The members of the Broadcasting Board of Governors (BBG) will meet in closed session to review and discuss a number of issues relating to U.S. Government-funded non-military international broadcasting. They will address internal procedural, budgetary, and personnel issues, as well as sensitive foreign policy issues relating to potential options in the U.S. international broadcasting field. This meeting is closed because if open it likely would either disclose matters that would be properly classified to be kept secret in the interest of foreign policy under the appropriate executive order (5 U.S.C. 552b.(c)(1)) or would disclose information the premature disclosure of which would be likely to significantly frustrate implementation of a proposed agency action. (5 U.S.C. 552b.(c)(9)(B)) In addition, part of the discussion will relate solely to the internal personnel and organizational issues of the BBG or the International Broadcasting Bureau. (5 U.S.C. 552b.(c)(2) and (6))

CONTACT PERSON FOR MORE INFORMATION: Persons interested in obtaining more information should contact Brenda Massey at (202) 401–3736.

Dated: September 1, 1998.

David W. Burke,

Chairman.

[FR Doc. 98–23915 Filed 9–1–98; 2:35 pm]

BILLING CODE 8230–01–M

DEPARTMENT OF COMMERCE

Bureau of the Census

Census 2000—American Samoa, the Commonwealth of the Northern Mariana Islands, Guam, and the U.S. Virgin Islands

ACTION: Proposed collection; comment request.

SUMMARY: The Department of Commerce, as part of its continuing effort to reduce paperwork and respondent burden, invites the general public and other Federal agencies to take this opportunity to comment on proposed and/or continuing information collections, as required by the Paperwork Reduction Act of 1995, Pub. L. 104–13 (44 U.S.C. 3506(c)(2)(A)).

DATES: Written comments must be submitted on or before November 2, 1998.

ADDRESSES: Direct all written comments to Linda Engelmeier, Departmental Forms Clearance Officer, Department of Commerce, Room 5327, 14th Street and Constitution Avenue, NW, Washington, DC 20230.

FOR FURTHER INFORMATION CONTACT: Requests for additional information should be directed to Decennial Communications, Decennial Management Division, Bureau of the Census, Room 2002, Suitland Federal Center 352, Washington, DC 20233–0001, (301) 457–3947.

SUPPLEMENTARY INFORMATION:

I. Abstract

The Census Bureau will conduct Census 2000 operations in American Samoa, the Commonwealth of the Northern Mariana Islands, Guam, and the U.S. Virgin Islands (collectively referred to as the Island Areas) in partnership with the government of each Island Area.

The United States Constitution mandates that a census of the Nation's population be taken every ten years. In Title 13, U.S. Code, the Congress gave the Secretary of Commerce (delegated to the Director of the Census Bureau) authority to undertake the decennial census.

The geographic scope of the decennial census is specified in Title 13 U.S.C., Section 191 as covering the 50 states, the District of Columbia, Puerto Rico, the Virgin Islands of the United States, the Commonwealth of the Northern Mariana Islands, and Guam, and any other areas as may be determined by the Secretary of Commerce. In Census 2000, we also will enumerate the Pacific Island Area of American Samoa.

The Census Bureau's goal in Census 2000 is to take the most accurate and cost-effective census possible. The goal in selecting Census 2000 questionnaire content for the Island Areas is to fulfill the many statutory data requirements of Federal agencies, as well as the needs of the Island Areas to administer governmental programs. Census data are the definitive benchmark for virtually all demographic information used by the Island Areas and local governments, policy makers, educators, journalists, and community and nonprofit organizations.

Based on the Census Bureau's review of the subject recommendations submitted by the Island Areas Interagency Committees, there will be one questionnaire for the Pacific Island Areas and a separate one for the U.S. Virgin Islands. Using two questionnaires will enable the Census Bureau to address the different needs of the areas.

The Census Bureau will collect demographic, social, economic, and housing characteristics from the Island Areas population. Many of the questions included on the questionnaires are the same as those on the stateside short and long-form questionnaires; others are modified stateside questions as recommended by the Island Areas Interagency Committees to reflect the unique social, economic, and climatic characteristics of these areas. There will be no sampling for content in the Island Areas; all forms distributed will be long-forms.

In the process of developing our data collection forms, the Census Bureau has tried to reduce respondent burden in two ways: (1) including only those questions that are explicitly required in Federal or local law or whose use is strongly implied by the data requirements in the law—both forms have fewer questions than their 1990 counterparts, and (2) working through the decade developing forms that are easy to understand and fill out.

II. Method of Collection

The Census Bureau will develop and sign a Memorandum of Agreement with the Governor of each of the Island Areas that outlines the mutual roles and responsibilities of each party in the conduct of Census 2000 for each Island Area.

The Census Bureau will conduct a blanket mailing of unaddressed questionnaires to postal patrons in each of the Island Areas. Housing units also will receive an advance letter before questionnaire delivery. Enumerators will visit each housing unit and pick up a completed questionnaire or conduct an interview if the respondent did not complete the questionnaire. They also will develop an address list for the area and spot each housing unit's location on a map at the time of enumeration. This operation is called list/enumerate.

The Census Bureau plans to take the following additional steps to improve response to the census:

- Encourage the Island Areas governments to build partnerships with local government agencies and community groups to alert them to problems and advise them about opportunities to publicize Census 2000 and the best ways to communicate the message.
- Motivate individuals to respond (by explaining the benefits and mandatory nature of the census) and make Census 2000 forms attractive, easy to understand, and simple to fill out.
- Employ new methods to find and enumerate people, such as enumerating persons who use services at shelters and other facilities and placing unaddressed ''Be Counted'' forms in publicly accessible locations such as community centers for pick up and completion by people who believe that they have not been counted in the census.
- Make greater use of the telephone as a data collection tool.

III. Data

OMB Number: Not available.

Form Numbers:

Advance Census Report Long Form: D–13 (AS), D–13 (CNMI), D–13 (G), D–13 (VI).

Enumerator Questionnaire Long Form: D–2E (AS), D–2E (CNMI), D–2E(G), D–2E (VI).

Enumerator Questionnaire Supplement: D–2(E) SUPP AS, D–2(E) SUPP CNMI, D–2(E) SUPP G, D–2(E) SUPP VI.

''Be Counted'' Forms: D–10(AS), D–10 (CNMI), D–10(G), D–10(VI).

Individual Census Reports: D–20B (PI), D–20B (VI).

Military Census Report: D–21 (PI).

Letters/Cards/Notices: D–1(F) PI, D–1(F) VI, D–5(L) AS, D–5 (L) CNMI, D–5(L) G, D–5(L) VI, D–13(L) AS, D–13(L) CNMI, D–13(L) G, D–13 (L) VI, D–26 (PI), D–26(VI), D–31 (PI), D–31(VI), D–3309.

Note: American Samoa (AS), Commonwealth of the Northern Mariana Islands (CNMI), Guam (G), and Virgin Islands (VI).

Type of Review: Regular Submission.

Affected Public: Individuals or Households.

Estimated Number of Respondents: 10,440 households in American Samoa, 12,560 households in CNMI, 36,530 households in Guam, 38,310 households in the U.S. Virgin Islands.

Estimated Time Per Response: AS Long Form: 62 minutes; CNMI Long Form: 45 minutes; G Long Form: 41 minutes; VI Long Form: 40 minutes; All Areas Vacants: 5 minutes.

Estimated Total Annual Burden: AS Long Form: 10,834 hours; CNMI Long Form: 9,620; G Long Form: 25,335 hours; VI Long Form: 26,262 hours; Total: 72,051 hours.

Note: Although the questionnaire content is the same for the Pacific Island Areas, the respondent burden differs for each area because of the expected household size.

Estimated Total Annual Cost: The only cost to respondent is their time.

Respondent's Obligation: Mandatory.

Legal Authority: Title 13 U.S.C. Sections 141 and 191.

IV. Request for Comments

Comments are invited on: (a) whether the proposed collection of information is necessary for the proper performance of the functions of the agency, including whether the information shall have practical utility; (b) the accuracy of the agency's estimate of the burden (including hours and cost) of the proposed collection of information; (c) ways to enhance the quality, utility, and clarity of the information; and (d) ways to minimize the burden of the collection of information on respondents, including through the use of automated collection techniques or other forms of information technology.

Comments submitted in response to this notice will be summarized and/or included in the request for OMB approval of this information collection; the comments will become a matter of public record.

Dated: August 28, 1998.

Linda Engelmeier,

Departmental Forms Clearance Officer, Office of the Chief Information Officer.

[FR Doc. 98–23708 Filed 9–2–98; 8:45 am]

BILLING CODE 3510–07–P

DEPARTMENT OF COMMERCE

Economics and Statistics Administration

Secretary's 2000 Census Advisory Committee

AGENCY: Economics and Statistics Administration, Department of Commerce.

ACTION: Notice of public meeting.

SUMMARY: Pursuant to the Federal Advisory Committee Act (Public Law 92–463, as amended by Pub. L. 94–409, Pub. L. 96–523, and Pub. L. 97–375), we are giving notice of a meeting of the Commerce Secretary's 2000 Census Advisory Committee. The meeting will convene on September 24–25, 1998, at the Embassy Suites Hotel, 1250 22nd Street, NW, Washington, DC. The Committee will continue to review and discuss Census 2000 Dress Rehearsal operations and procedures as well as Census 2000, including plans for the language program. Last-minute changes to the schedule are possible, and they could prevent us from giving advance notice.

DATES: On Thursday, September 24, 1998, the meeting will begin around 8:45 a.m. and adjourn at approximately 4:30 p.m. On Friday, September 25, 1998, the meeting will begin around 8:45 a.m. and adjourn at approximately 4:00 p.m.

ADDRESSES: The meeting will take place at the Embassy Suites Hotel, 1250 22nd Street, NW, Washington, DC.

FOR FURTHER INFORMATION CONTACT: Anyone wishing additional information about this meeting, or who wishes to submit written statements, may contact Maxine Anderson-Brown, Committee Liaison Officer, Department of Commerce, Bureau of the Census, Room 1647, Federal Building 3, Washington, DC 20233, telephone 301–457–2308, TDD 301–457–2540.

SUPPLEMENTARY INFORMATION: The Committee is composed of a Chair, Vice-Chair, and up to 35 member organizations, all appointed by the Secretary of Commerce. The Committee

will consider the goals of Census 2000 and user needs for information provided by that census. The Committee will provide an outside user perspective about how operational planning and implementation methods proposed for Census 2000 will realize those goals and satisfy those needs. The Committee shall consider all aspects of the conduct of the 2000 Census of Population and Housing and shall make recommendations for improving that census.

A brief period will be set aside at the close of the meeting for public comment. However, individuals with extensive statements for the record must submit them in writing to the Commerce Department official named above at least three working days prior to the meeting. Seating is available to the public on a first-come, first-served basis.

The meeting is physically accessible to people with disabilities. Requests for sign language interpretation or other auxiliary aids should be directed to Shelby Folger at 301–457–2308, TDD 301–457–2540.

Dated: August 27, 1998.

Robert J. Shapiro,

Under Secretary for Economic Affairs, Economics and Statistics Administration.

[FR Doc. 98–23788 Filed 9–2–98; 8:45 am]

BILLING CODE 3510–07–P

DEPARTMENT OF COMMERCE

International Trade Administration

[A–122–829, A–533–814, A–588–844, A–580–830, A–469–808, A–583–829]

Notice of Postponement of Preliminary Antidumping Determinations: Stainless Steel Round Wire from Canada, India, Japan, the Republic of Korea, Spain, and Taiwan

AGENCY: Import Administration, International Trade Administration, Department of Commerce.

EFFECTIVE DATE: September 3, 1998.

FOR FURTHER INFORMATION CONTACT: Gabriel Adler or Thomas Schauer, Offices of AD/CVD Enforcement II and III, respectively, Import Administration, International Trade Administration, U.S. Department of Commerce, 14th Street and Constitution Avenue NW, Washington, DC 20230; telephone (202) 482–1442 or (202) 482–4852, respectively.

Postponement of Preliminary Determinations

On May 6, 1998, the Department of Commerce (the Department) initiated antidumping investigations of stainless steel round wire from Canada, India, Japan, the Republic of Korea, Spain, and Taiwan. The notice stated we would issue our preliminary determinations no later than September 23, 1998. On August 24, 1998, pursuant to section 733(c) of the Tariff Act of 1930, as amended (the Act), ACS Industries, Inc., Al Tech Specialty Steel Corp., Branford Wire & Manufacturing Company, Carpenter Technology Corp., Handy & Harman Specialty Wire Group, Industrial Alloys, Inc., Loos & Company, Inc., Sandvik Steel Company, Sumiden Wire Products Corporation, and Techalloy Company, Inc. (the petitioners) requested that the Department postpone for 50 days the issuance of the preliminary determinations in these investigations. Given that (1) the petitioners' request for postponement was timely and (2) the Department finds no compelling reason for the request to be denied, we are postponing the deadline for issuing these determinations until no later than November 12, 1998.

This extension is in accordance with section 733(c)(1)(A) of the Act and 19 CFR 351.205(b)(2).

Dated: August 27, 1998.

Joseph A. Spetrini,

Acting Assistant Secretary for Import Administration.

[FR Doc. 98–23811 Filed 9–2–98; 8:45 am]

BILLING CODE 3510–DS–P

DEPARTMENT OF COMMERCE

International Trade Administration

Export Trade Certificate of Review

ACTION: Notice of Application to Amend Certificate.

SUMMARY: The Office of Export Trading Company Affairs (''OETCA''), International Trade Administration, Department of Commerce, has received an application to amend an Export Trade Certificate of Review. This notice summarizes the proposed amendment and requests comments relevant to whether the amended Certificate should be issued.

FOR FURTHER INFORMATION CONTACT: Morton Schnabel, Director, Office of Export Trading Company Affairs, International Trade Administration, (202) 482–5131. This is not a toll-free number.

SUPPLEMENTARY INFORMATION: Title III of the Export Trading Company Act of 1982 (15 U.S.C. 4001–21) authorizes the Secretary of Commerce to issue Export Trade Certificates of Review. A Certificate of Review protects the holder and the members identified in the Certificate from state and federal government antitrust actions and from private, treble damage antitrust actions for the export conduct specified in the Certificate and carried out in compliance with its terms and conditions. Section 302(b)(1) of the Act and 15 CFR 325.6(a) require the Secretary to publish a notice in the **Federal Register** identifying the applicant and summarizing its proposed export conduct.

Request for Public Comments

Interested parties may submit written comments relevant to the determination whether an amended Certificate should be issued. If the comments include any privileged or confidential business information, it must be clearly marked and a nonconfidential version of the comments (identified as such) should be included. Any comments not marked privileged or confidential business information will be deemed to be nonconfidential. An original and five copies, plus two copies of the nonconfidential version, should be submitted no later than 20 days after the date of this notice to: Office of Export Trading Company Affairs, International Trade Administration, Department of Commerce, Room 1800H, Washington, DC 20230. Information submitted by any person is exempt from disclosure under the Freedom of Information Act (5 U.S.C. 552). However, nonconfidential versions of the comments will be made available to the applicant if necessary for determining whether or not to issue the certificate. Comments should refer to this application as ''Export Trade Certificate of Review, application number 85–7A018.''

Export Trade Certificate of Review No. 85–00018 was issued to U.S. Shippers Association (''USSA'') on June 3, 1986 (51 FR 20873, June 9, 1986) and subsequently amended on January 16, 1990 (55 FR 2543, January 25, 1990); November 13, 1990 (55 FR 48664, November 21, 1990); September 22, 1993 (58 FR 51061, September 30, 1993); June 28, 1994 (59 FR 34411, July 5, 1994); and April 10, 1997 (62 FR 18586, April 16, 1997).

Summary of the Application

Applicant: U.S. Shippers Association, 1209 Orange Street, Wilmington, Delaware 19801.

Contact: James R. Atwood, Legal Counsel, Telephone: (202) 662–6000.

Application No.: 85–7A018.

Date Deemed Submitted: August 26, 1998.

Proposed Amendment

USSA seeks to amend its Certificate to:

1. Add as ''Members'' within the meaning of Section 325.2 (1) of the Regulations (15 CFR 325.2(1)): Rhodia, Inc., Cranbury, New Jersey (Controlling Entity: Rhone-Poulenc, S.A., Courbevoie Cedex, France); and Rhone-Poulenc Animal Nutrition, Inc., Atlanta, Georgia (Controlling Entity: Rhone-Poulenc, S.A., Courbevoie Cedex, France).

2. Change the listing of the company name for current ''Member,'' Rhone-Poulenc, Inc., to the new name of Rhone-Poulenc AG Company, Inc.

Dated: August 31, 1998.

Morton Schnabel,

Director, Office of Export Trading Company Affairs.

[FR Doc. 98–23823 Filed 9–2–98; 8:45 am]

BILLING CODE 3510–DR–P

DEPARTMENT OF COMMERCE

International Trade Administration

Performance Review Board

AGENCY: International Trade Administration, Commerce.

ACTION: Notice.

SUMMARY: Announcement of New Members for the Performance Review Board.

FOR FURTHER INFORMATION CONTACT: LaVerne H. Hawkins, Department of Commerce, Office of Human Resources Management, Room 4803, Washington, D.C. 20230 202–482–2537.

SUPPLEMENTARY INFORMATION: This notice announces the appointment by the Under Secretary for International Trade, Ambassador David L. Aaron, of the Performance Review Board (PRB). This is a revised list of new members and the reappointment of a previous board member as listed in the August 13, 1996, **Federal Register** 61FR42004. The appointments are for a period of 2 years. The purpose of the International Trade Administration's Performance Review Board (PRB) is to review and make recommendations to the appointing authority on performance management issues such as appraisals and bonuses, ES-level Increases and Presidential Rank Awards for members of the Senior Executive Service (SES). The members are:

Eleanor Roberts Lewis, Chief Counsel for International Trade.	Non-ITA—Career.
Troy H. Cribb, Deputy Assistant Secretary for Textiles, Apparel and Consumer Goods.	Non-Career.
Mary Fran Kirchner, Deputy Assistant Secretary for Export Promotion Services.	Non-Career.
Henry H. Misisco, Acting Deputy Assistant Secretary for Basic Industries.	Career.
Marjory Searing, Deputy Assistant Secretary for Japan.	Career.
Joseph Spetrini, Deputy Assistant Secretary for Antidumping Countervailing Duty Enforcement III.	Career.
Franklin J. Vargo, Deputy Assistant Secretary for Agreements Compliance.	Career.
LaVerne H. Hawkins, Office of Human Resources Management 202–482–2537.	Executive Secretary.

Dated: August 27, 1998.

James T. King, Jr.,

Human Resources Management, ITA.

[FR Doc. 98–23707 Filed 9–2–98; 8:45 am]

BILLING CODE 3510–25–P

DEPARTMENT OF COMMERCE

National Oceanic and Atmospheric Administration

[I.D. 081798C]

Marine Mammals; File No. 786–1463

AGENCY: National Marine Fisheries Service (NMFS), National Oceanic and Atmospheric Administration (NOAA), Commerce.

ACTION: Issuance of permit.

SUMMARY: Notice is hereby given that Institute of Marine Sciences, Earth & Marine Sciences Bldg. A316, University of California, Santa Cruz, California 95064 [Principal Investigator (PI): Dr. Daniel P. Costa] has been issued a permit to take northern elephant seals (*Mirounga angustirostris*) and import samples from northern and southern elephant seals (*Mirounga leonina*) for purposes of scientific research.

ADDRESSES: The permit and related documents are available for review upon written request or by appointment in the following office(s):

Permits and Documentation Division, Office of Protected Resources, NMFS, 1315 East-West Highway, Room 13705, Silver Spring, MD 20910 (301/713–2289); and

Regional Administrator, Southwest Region, National Marine Fisheries Service, NOAA, 501 West Ocean Blvd., Suite 4200, Long Beach, CA 90802–4213 (562/980–4001).

FOR FURTHER INFORMATION CONTACT: Ruth Johnson or Sara Shapiro, 301/713–2289.

SUPPLEMENTARY INFORMATION: On July 14, 1998, notice was published in the **Federal Register** (63 FR 37852) that a request for a scientific research permit to take northern elephant seals (*Mirounga angustirostris*) had been submitted by the above-named organization. The requested permit has been issued under the authority of the Marine Mammal Protection Act of 1972, as amended (16 U.S.C. 1361 *et seq.*) and the Regulations Governing the Taking and Importing of Marine Mammals (50 CFR part 216).

Dated: August 24, 1998.

Ann D. Terbush,

Chief, Permits and Documentation Division, Office of Protected Resources, National Marine Fisheries Service.

[FR Doc. 98–23798 Filed 9–2–98; 8:45 am]

BILLING CODE 3510–22–F

DEPARTMENT OF COMMERCE

Patent and Trademark Office

[Docket No. 970129014–8206–02]

RIN 0651–XX09

Guidelines for the Examination of Claims Directed to Species of Chemical Compositions Based Upon a Single Prior Art Reference

AGENCY: Patent and Trademark Office, Commerce.

ACTION: Notice.

SUMMARY: The Patent and Trademark Office (PTO) is publishing the final version of guidelines to be used by Office personnel in reviewing a certain type of patent application for compliance with 35 U.S.C. 103. The guidelines are to be used when examining claims directed to a species or subgenus of chemical compositions when: (1) the claims have been rejected based upon a single prior art reference, and (2) the single prior art reference discloses a genus embracing the claimed species or subgenus but does not expressly describe the particular claimed species or subgenus. Because these guidelines govern internal practices, they are exempt from notice and comment rulemaking under 5 U.S.C. 553(b)(A).

DATES: The guidelines are effective September 3, 1998.

FOR FURTHER INFORMATION CONTACT: Linda Moncys Isacson, Office of the Solicitor, P.O. Box 15667, Arlington, Virginia 22215 or Linda S. Therkorn, Box Comments, Assistant Commissioner for Patents, Washington, D.C. 20231, or by facsimile transmission to (703) 305–9373 or by electronic mail over the Internet to baird-comments@uspto.gov.

SUPPLEMENTARY INFORMATION:

Discussion of Public Comments

Comments were received by the PTO from two different individuals and one organization in response to the Request for Comments on the Interim Guidelines for the Examination of Claims Directed to Species of Chemical Compositions Based Upon a Single Prior Art Reference published February 11, 1997 (62 FR 6217). All comments have been carefully considered.

The following comments have been substantively adopted to effect changes in the guidelines:

(1) A suggestion to annotate the flowchart with references to corresponding sections of text in the guidelines was adopted.

(2) One comment suggested that the guidelines inappropriately focussed solely on the number of possible members of a prior art genus to determine whether the prior art genus anticipated a claimed species or subgenus. Attention was drawn to the discussion of *In re Petering,* 301 F.2d 676, 133 USPQ 275 (CCPA 1962) in the text at section II.A.4.a and note 22, which seemed to suggest that size of the genus alone was sufficient to support a finding of anticipation. These portions of the guidelines have been modified to indicate that size of the genus is only one factor to be considered in determining anticipation.

(3) One comment suggested that the guidelines be supplemented to direct Office personnel to consider the sufficiency of the preparative methods disclosed in the cited reference. Failure of a prior art reference to disclose or render obvious a method for making any composition of matter may preclude a conclusion that the composition would have been obvious if the disclosure is not enabling. However, once a *prima facie* case of obviousness is made out by the PTO, the initial burden of going forward with evidence to show that no process was known in the art for preparing the compound is on the applicant. Accordingly, the guidelines have been changed at section II.B to include consideration of sufficiency of disclosure of preparative methods as rebuttal evidence to overcome a *prima facie* case of obviousness.

(4) One comment suggested that the language in section II.A.2 of the guidelines and in corresponding portions of the flowchart instructing Office personnel to make explicit findings on the similarities and differences between ''the closest prior art reference'' and the claimed species or subgenus be changed to direct findings to be made between the ''closest disclosed species or subgenus'' and the claimed species or subgenus for accuracy and clarity. This change has been made in the text.

(5) One comment suggested that section II.A.4.d be clarified to indicate that the utility disclosed in a reference need not be the same as the stated utility of the claimed compound. Language has been added to indicate that any useful property may be the basis of a finding of motivation.

(6) One comment suggested that language in section II.B. stating that evidence of an unexpected property may not be sufficient to overcome a *prima facie* case of obviousness, regardless of the scope of the showing, is not accurate in view of the law. Language has been added to the associated footnote to clarify that a showing of an unexpected property is sufficient in most circumstances.

The following comments have been considered but have not been adopted for the reasons discussed below:

(1) One comment suggested that more emphasis be placed on additional references which may teach away from the claimed compound(s) due to a disclosure of related compounds having or expected to have disadvantages not possessed by the claimed compound(s). This comment was not adopted because it focuses on ''additional references,'' whereas the scope of these guidelines is directed to situations involving rejections over a single reference. The guidelines already clearly instruct Office personnel that they must consider any additional references or evidence of teaching away that are present.

(2) One comment suggested that the guidelines were too limited in scope because they focused on rejections based on a single reference as opposed to rejections based on more than one reference. The scope of these guidelines is intended to address a specific issue, i.e., the situation where only one reference disclosing a genus but not the claimed species is found. Although the principles discussed in these guidelines are generally applicable to all rejections under 35 U.S.C. 103, the explicit scope of these guidelines will not be changed.

(3) One comment suggested that section II.A.4.f of the guidelines inappropriately instructs Office personnel to focus only on evidence supporting a rejection rather than making a complete analysis. Section II.A.4.f of the guidelines additionally instructs Office personnel to consider the totality of the evidence in each case. Furthermore, Office personnel are instructed in section II.B to consider whether rebuttal evidence overcomes a *prima facie* case of obviousness and in section III to reconsider all evidence in reaching a conclusion. Thus, the guidelines presently clearly require all evidence to be considered, not only evidence supporting a rejection.

(4) One comment suggested that the last sentence of section II.A.4.c assumes that a generic teaching in a reference, by itself, is never enough to make out a *prima facie* case of obviousness. The referenced language does not suggest this, but rather it merely states the general proposition that in most cases, additional teachings of structural similarity to the disclosed species or subgenus are necessary. Accordingly, no change has been made.

(5) One comment suggested that the guidelines address the significance of the type of reference involved, i.e. whether there is a difference between a journal publication, a U.S. Patent, a foreign patent, etc. This suggestion has not been adopted, because for substantive analysis under 35 U.S.C. 103, each reference should be considered for all of its teachings, regardless of its form.

(6) One comment suggested that the guidelines address the significance of the presence or absence of any activity testing of disclosed species in the reference. The guidelines already instruct Office personnel to consider any teachings of similar properties or uses, predictability of the technology, and any other teachings present in the reference that would support selection of the claimed compound. Consideration of any disclosed testing data is subsumed in these considerations.

I. Guidelines for the Examination of Claims Directed to Species of Chemical Compositions Based Upon a Single Prior Art Reference

These ''Genus-Species Guidelines'' are to assist Office personnel in the examination of applications which contain claims to species or a subgenus of chemical compositions for compliance with 35 U.S.C. 103 based upon a single prior art reference which discloses a genus encompassing the claimed species or subgenus but does not expressly disclose the particular claimed species or subgenus. Office personnel should attempt to find additional prior art to show that the differences between the prior art primary reference and the claimed invention as a whole would have been obvious. Where such additional prior art is not found, Office personnel should follow these guidelines to determine whether a single reference 35 U.S.C. 103 rejection would be appropriate. The guidelines are based on the Office's

current understanding of the law and are believed to be fully consistent with binding precedent of the Supreme Court, the Federal Circuit, and the Federal Circuit's predecessor courts.

The analysis of the guidelines begins at the point during examination after a single prior art reference is found disclosing a genus encompassing the claimed species or subgenus. Before reaching this point, Office personnel should follow appropriate antecedent examination procedures. Accordingly, Office personnel should first analyze the claims as a whole in light of and consistent with the written description, considering all claim limitations.[1] Next, Office personnel should conduct a thorough search of the prior art and identify all relevant references.[2] If the most relevant prior art consists of a single prior art reference disclosing a genus encompassing the claimed species or subgenus, Office personnel should follow the guidelines set forth herein.[*]

These guidelines do not constitute substantive rulemaking and hence do not have the force and effect of law. Rather, they are to assist Office personnel in analyzing claimed subject matter for compliance with substantive law. Thus, rejections must be based upon the substantive law, and it is these rejections which are appealable, not any failure by Office personnel to follow these guidelines.

Office personnel are to rely on these guidelines in the event of any inconsistent treatment of issues between these guidelines and any earlier provided guidance from the Office.

II. Determine Whether the Claimed Species or Subgenus Would Have Been Obvious to One of Ordinary Skill in the Pertinent Art at the Time the Invention Was Made

The patentability of a claim to a specific compound or subgenus embraced by a prior art genus should be analyzed no differently than any other claim for purposes of 35 U.S.C. 103.[3] A determination of patentability under 35 U.S.C. 103 should be made upon the facts of the particular case in view of the totality of the circumstances.[4] Use of *per se* rules by Office personnel is improper for determining whether claimed subject matter would have been obvious under 35 U.S.C. 103.[5] The fact that a claimed species or subgenus is encompassed by a prior art genus is not sufficient by itself to establish a *prima facie* case of obviousness.[6]

A proper obviousness analysis involves a three step process. First, Office personnel should establish a *prima facie* case of unpatentability considering the factors set out by the Supreme Court in *Graham* v. *John Deere*.[7] If a *prima facie* case is established, the burden shifts to applicant to come forward with rebuttal evidence or argument to overcome the *prima facie* case.[8] Finally, Office personnel should evaluate the totality of the facts and all of the evidence to determine whether they still support a conclusion that the claimed invention would have been obvious to one of ordinary skill in the art at the time the invention was made.[9]

A. Establishing a Prima Facie Case of Obviousness

To establish a *prima facie* case of obviousness in a genus-species chemical composition situation, as in any other 35 U.S.C. 103 case, it is essential that Office personnel find some motivation or suggestion to make the claimed invention in light of the prior art teachings.[10] In order to find such motivation or suggestion there should be a reasonable likelihood that the claimed invention would have the properties disclosed by the prior art teachings.[11] These disclosed findings should be made with a complete understanding of the first three ''Graham factors.'' [12] Thus, Office personnel should (1) determine the ''scope and content of the prior art''; (2) ascertain the ''differences between the prior art and the claims at issue''; and (3) determine ''the level of ordinary skill in the pertinent art.'' [13]

1. Determine the Scope and Content of the Prior Art

As an initial matter, Office personnel should determine the scope and content of the relevant prior art. Each reference must qualify as prior art under 35 U.S.C. 102,[14] and should be in the field of applicant's endeavor, or be reasonably pertinent to the particular problem with which the inventor was concerned.[15]

In the case of a prior art reference disclosing a genus, Office personnel should make findings as to (1) the structure of the disclosed prior art genus and that of any expressly described species or subgenus within the genus; (2) any physical or chemical properties and utilities disclosed for the genus, as well as any suggested limitations on the usefulness of the genus, and any problems alleged to be addressed by the genus; (3) the predictability of the technology; and (4) the number of species encompassed by the genus taking into consideration all of the variables possible.

2. Ascertain the Differences Between the Closest Disclosed Prior Art Species or Subgenus of Record and the Claimed Species or Subgenus

Once the structure of the disclosed prior art genus and that of any expressly described species or subgenus within the genus are identified, Office personnel should compare it to the claimed species or subgenus to determine the differences. Through this comparison, the closest disclosed species or subgenus in the prior art reference should be identified and compared to that claimed. Office personnel should make explicit findings on the similarities and differences between the closest disclosed prior art species or subgenus of record and the claimed species or subgenus including findings relating to similarity of structure, chemical properties and utilities.[16]

3. Determine the Level of Skill in the Art

Office personnel should evaluate the prior art from the standpoint of the hypothetical person having ordinary skill in the art at the time the claimed invention was made.[17] In most cases, the only facts of record pertaining to the level of skill in the art will be found within the prior art reference. However, any additional evidence presented by applicant should be evaluated.

4. Determine Whether One of Ordinary Skill in the Art Would Have Been Motivated To Select the Claimed Species or Subgenus

In light of the findings made relating to the three *Graham* factors, Office personnel should determine whether one of ordinary skill in the relevant art would have been motivated to make the claimed invention as a whole, *i.e.*, to select the claimed species or subgenus from the disclosed prior art genus.[18] To address this key issue, Office personnel should consider all relevant prior art teachings, focusing on the following, where present.

a. Consider the size of the genus. Consider the size of the prior art genus, bearing in mind that size alone cannot support an obviousness rejection.[19] There is no absolute correlation between the size of the prior art genus and a conclusion of obviousness.[20] Thus, the mere fact that a prior art genus contains a small number of members does not create a *per se* rule of obviousness. Some motivation to select the claimed species or subgenus must be taught by the prior art.[21] However, a genus may be so small that, when considered in light of the totality of the circumstances, it

[*] Footnotes at end of docket.

would anticipate the claimed species or subgenus. For example, it has been held that a prior art genus containing only 20 compounds and a limited number of variations in the generic chemical formula inherently anticipated a claimed species within the genus because ''one skilled in [the] art would . . . envisage *each member*'' of the genus.[22]

b. Consider the express teachings. If the prior art reference expressly teaches a particular reason to select the claimed species or subgenus, Office personnel should point out the express disclosure which would have motivated one of ordinary skill in the art to select the claimed invention.[23]

c. Consider the teachings of structural similarity. Consider any teachings of a ''typical,'' ''preferred,'' or ''optimum'' species or subgenus within the disclosed genus. If such a species or subgenus is structurally similar to that claimed, its disclosure may motivate one of ordinary skill in the art to choose the claimed species or subgenus from the genus,[24] based on the reasonable expectation that structurally similar species usually have similar properties.[25] The utility of such properties will normally provide some motivation to make the claimed species or subgenus.[26]

In making an obviousness determination, Office personnel should consider the number of variables which must be selected or modified, and the nature and significance of the differences between the prior art and the claimed invention.[27] The closer the physical and chemical similarities between the claimed species or subgenus and any exemplary species or subgenus disclosed in the prior art, the greater the expectation that the claimed subject matter will function in an equivalent manner to the genus.[28]

Similarly, consider any teaching or suggestion in the reference of a preferred species or subgenus that is significantly different in structure from the claimed species or subgenus. Such a teaching may weigh against selecting the claimed species or subgenus and thus against a determination of obviousness.[29] For example, teachings of preferred species of a complex nature within a disclosed genus may motivate an artisan of ordinary skill to make similar complex species and thus teach away from making simple species within the genus.[30] Concepts used to analyze the structural similarity of chemical compounds in other types of chemical cases are equally useful in analyzing genus-species cases.[31] Generally, some teaching of a structural similarity will be necessary to suggest selection of the claimed species or subgenus.[32]

d. Consider the teachings of similar properties or uses. Consider the properties and utilities of the structurally similar prior art species or subgenus. It is the properties and utilities that provide real world motivation for a person of ordinary skill to make species structurally similar to those in the prior art.[33] Conversely, lack of any known useful properties weighs against a finding of motivation to make or select a species or subgenus.[34] However, the prior art need not disclose a newly discovered property in order for there to be a *prima facie* case of obviousness.[35] If the claimed invention and the structurally similar prior art species share any useful property, that will generally be sufficient to motivate an artisan of ordinary skill to make the claimed species.[36] For example, based on a finding that a tri-ortho ester and a tetra-ortho ester behave similarly in certain chemical reactions, it has been held that one of ordinary skill in the relevant art would have been motivated to select either structure.[37] In fact, similar properties may normally be presumed when compounds are very close in structure.[38] Thus, evidence of similar properties or evidence of any useful properties disclosed in the prior art that would be expected to be shared by the claimed invention weighs in favor of a conclusion that the claimed invention would have been obvious.[39]

e. Consider the predictability of the technology. Consider the predictability of the technology.[40] If the technology is unpredictable, it is less likely that structurally similar species will render a claimed species obvious because it may not be reasonable to infer that they would share similar properties.[41] However, obviousness does not require absolute predictability, only a reasonable expectation of success, *i.e.,* a reasonable expectation of obtaining similar properties.[42]

f. Consider any other teaching to support the selection of the species or subgenus. The categories of relevant teachings enumerated above are those most frequently encountered in a genus-species case, but they are not exclusive. Office personnel should consider the totality of the evidence in each case. In unusual cases, there may be other relevant teachings sufficient to support the selection of the species or subgenus and, therefore, a conclusion of obviousness.

5. *Make express fact-findings and determine whether they support a prima facie case of obviousness.* Based on the evidence as a whole,[43] Office personnel should make express fact-findings relating to the *Graham* factors, focusing primarily on the prior art teachings discussed above. The fact-findings should specifically articulate what teachings or suggestions in the prior art would have motivated one of ordinary skill in the art to select the claimed species or subgenus.[44] Thereafter, it should be determined whether these findings, considered as a whole, support a *prima facie* case that the claimed invention would have been obvious to one of ordinary skill in the relevant art at the time the invention was made.

B. Determining Whether Rebuttal Evidence Is Sufficient To Overcome the Prima Facie Case of Obviousness

If a *prima facie* case of obviousness is established, the burden shifts to the applicant to come forward with arguments and/or evidence to rebut the *prima facie* case.[45] Rebuttal evidence and arguments can be presented in the specification,[46] by counsel,[47] or by way of an affidavit or declaration under 37 CFR § 1.132.[48] However, arguments of counsel cannot take the place of factually supported objective evidence.[49]

Office personnel should consider all rebuttal arguments and evidence presented by applicants.[50] Rebuttal evidence may include evidence of ''secondary considerations,'' such as ''commercial success, long felt but unsolved needs, [and] failure of others,'' [51] evidence that the claimed invention yields unexpectedly improved properties or properties not present in the prior art,[52] or evidence that the claimed invention was copied by others.[53] It may also include evidence of the state of the art, the level of skill in the art, and the beliefs of those skilled in the art.[54] For example, rebuttal evidence may include a showing that the prior art fails to disclose or render obvious a method for making the compound, which would preclude a conclusion of obviousness of the compound.[55]

Consideration of rebuttal evidence and arguments requires Office personnel to weigh the proffered evidence and arguments. Office personnel should avoid giving evidence no weight, except in rare circumstances.[56] However, to be entitled to substantial weight, the applicant should establish a nexus between the rebuttal evidence and the claimed invention,[57] *i.e.,* objective evidence of nonobviousness must be attributable to the claimed invention.[58] Additionally, the evidence must be reasonably commensurate in scope with the claimed invention.[59] However, an exemplary showing may be sufficient to establish a reasonable correlation

between the showing and the entire scope of the claim, when viewed by a skilled artisan.[60] On the other hand, evidence of an unexpected property may not be sufficient regardless of the scope of the showing.[61] Accordingly, each case should be evaluated individually based on the totality of the circumstances.

Office personnel should not evaluate rebuttal evidence for its ''knockdown'' value against the *prima facie* case[62] or summarily dismiss it as not compelling or insufficient. If the evidence is deemed insufficient to rebut the *prima facie* case of obviousness, Office personnel should specifically set forth the facts and reasoning that justify this conclusion.

III. Reconsider All Evidence and Clearly Communicate Findings and Conclusions

A determination under 35 U.S.C. § 103 should rest on *all* the evidence and should not be influenced by any earlier conclusion.[63] Thus, once the applicant has presented rebuttal evidence, Office personnel should reconsider any initial obviousness determination in view of the entire record.[64] All the proposed rejections and their bases should be reviewed to confirm their correctness. Only then should any rejection be imposed in an Office action. The Office action should clearly communicate the Office's findings and conclusions, articulating how the conclusions are supported by the findings.

Where applicable, the findings should clearly articulate which portions of the reference support any rejection. Explicit findings on motivation or suggestion to select the claimed invention should also be articulated in order to support a 35 U.S.C. § 103 ground of rejection.[65] Conclusory statements of similarity or motivation, without any articulated rationale or evidentiary support, do not constitute sufficient factual findings.

VI. Endnotes

[1] When evaluating the scope of a claim, every limitation in the claim must be considered. E.g., *In re Ochiai,* 71 F.3d 1565, 1572, 37 USPQ2d 1127, 1133 (Fed. Cir. 1995). However, the claimed invention may not be dissected into discrete elements to be analyzed in isolation, but must be considered as a whole. E.g., *W.L. Gore & Assoc., Inc.* v. *Garlock, Inc.,* 721 F.2d 1540, 1548, 220 USPQ 303, 309 (Fed. Cir. 1983), *cert. denied,* 469 U.S. 851 (1984); *Jones* v. Hardy, 727 F.2d 1524, 1530, 220 USPQ 1021, 1026 (Fed. Cir. 1983)(''treating the advantage as the invention disregards the statutory requirement that the invention be viewed 'as a whole''').

[2] Both claimed and unclaimed aspects of the invention should be searched if there is a reasonable expectation that the unclaimed aspects may be later claimed.

[3] ''The section 103 requirement of unobviousness is no different in chemical cases than with respect to other categories of patentable inventions.'' *In re Papesch* , 315 F.2d 381, 385, 137 USPQ 43, 47 (CCPA 1963).

[4] E.g., *In re Dillon* , 919 F.2d 688, 692–93, 16 USPQ2d 1897, 1901 (Fed. Cir. 1990)(in banc).

[5] E.g., *In re Brouwer* , 77 F.3d 422, 425, 37 USPQ2d 1663, 1666 (Fed. Cir. 1996); *In re Ochiai,* 71 F.3d 1565, 1572, 37 USPQ2d 1127, 1133 (Fed. Cir. 1995); In re Baird, 16 F.3d 380, 382, 29 USPQ2d 1550, 1552 (Fed. Cir. 1994).

[6] *In re Baird* , 16 F.3d 380, 382, 29 USPQ2d 1550, 1552 (Fed. Cir. 1994)(''The fact that a claimed compound may be encompassed by a disclosed generic formula does not by itself render that compound obvious.''); *In re Jones,* 958 F.2d 347, 350, 21 USPQ2d 1941, 1943 (Fed. Cir. 1992)(Federal Circuit has ''decline[d] to extract from *Merck [& Co.* v. *Biocraft Laboratories Inc.,* 874 F.2d 804, 10 USPQ2d 1843 (Fed. Cir. 1989)] the rule that . . . regardless of how broad, a disclosure of a chemical genus renders obvious any species that happens to fall within it.''). See also *In re Deuel,* 51 F.3d 1552, 1559, 34 USPQ2d 1210, 1215 (Fed. Cir. 1995).

[7] E.g., *In re Bell,* 991 F.2d 781, 783, 26 USPQ2d 1529, 1531 (Fed. Cir. 1993)(''The PTO bears the burden of establishing a case of *prima facie* obviousness.''); *In re Rijckaert,* 9 F.3d 1531, 1532, 28 USPQ2d 1955, 1956 (Fed. Cir. 1993); *In re Oetiker,* 977 F.2d 1443, 1445, 24 USPQ2d 1443, 1444 (Fed. Cir. 1992).

Graham v. *John Deere* Co., 383 U.S. 1, 17–18 (1966), requires that to make out a case of obviousness, one must: (1) determine the scope and contents of the prior art; (2) ascertain the differences between the prior art and the claims in issue; (3) determine the level of skill in the pertinent art; and (4) evaluate any evidence of secondary considerations.

[8] E.g., *Bell,* 991 F.2d at 783–84, 26 USPQ2d at 1531; *Rijckaert,* 9 F.3d at 1532, 28 USPQ2d at 1956; *Oetiker,* 977 F.2d at 1445, 24 USPQ2d at 1444.

[9] Id.

[10] E.g., *In re Brouwer,* 77 F.3d 422, 425, 37 USPQ2d 1663, 1666 (Fed. Cir. 1996)(''[T]he mere possibility that one of the esters or the active methylene group-containing compounds . . . could be modified or replaced such that its use would lead to the specific sulfoalkylated resin recited in claim 8 does not make the process recited in claim 8 obvious ''unless the prior art suggested the desirability of [such a] modification'' or replacement.'')(quoting *In re Gordon,* 733 F.2d 900, 902, 221 USPQ 1125, 1127 (Fed. Cir. 1984); *In re Vaeck,* 947 F.2d 488, 493, 20 USPQ2d 1438, 1442 (Fed. Cir. 1991)(''[A] proper analysis under § 103 requires, *inter alia,* consideration of . . . whether the prior art would have suggested to those of ordinary skill in the art that they should make the claimed composition or device, or carry out the claimed process.'').

[11] The prior art disclosure may be express, implicit, or inherent. Regardless of the type of disclosure, the prior art must provide some motivation to one of ordinary skill in the art to make the claimed invention in order to support a conclusion of obviousness. E.g., *Vaeck,* 947 F.2d at 493, 20 USPQ2d at 1442 (A proper obviousness analysis requires consideration of ''whether the prior art would also have revealed that in so making or carrying out [the claimed invention], those of ordinary skill would have a reasonable expectation of success.''); *In re Dow Chemical Co.,* 837 F.2d 469, 473, 5 USPQ2d 1529, 1531 (Fed. Cir. 1988)(''The consistent criterion for determination of obviousness is whether the prior art would have suggested to one of ordinary skill in the art that this process should be carried out and would have a reasonable likelihood of success, viewed in the light of the prior art.''); *Hodosh* v. *Block Drug Co.,* 786 F.2d 1136, 1143 n.5, 229 USPQ 182, 187 n.5 (Fed. Cir. 1986).

[12] When evidence of secondary considerations such as unexpected results is initially before the Office, for example in the specification, that evidence should be considered in deciding whether there is a *prima facie* case of obviousness. The determination as to whether a *prima facie case* exists should be made on the full record before the Office at the time of the determination.

[13] *Graham* v. *John Deere,* 383 U.S. 1, 17, 148 USPQ 459, 467 (1966). Accord, e.g., *In re Paulsen,* 30 F.3d 1475, 1482, 31 USPQ2d 1671, 1676 (Fed. Cir. 1994).

[14] E.g., *Panduit Corp.* v. *Dennison Mfg. Co.,* 810 F.2d 1561, 1568, 1 USPQ2d 1593, 1597 (Fed. Cir. 1987)(''Before answering *Graham's* ''content'' inquiry, it must be known whether a patent or publication is in the prior art under 35 U.S.C. § 102.'').

[15] *In re Oetiker,* 977 F.2d 1443, 1447, 24 USPQ2d 1443, 1445 (Fed. Cir. 1992). Accord, e.g., *In re Clay,* 966 F.2d 656, 658–59, 23 USPQ2d 1058, 1060 (Fed. Cir. 1992).

[16] In *Stratoflex, Inc.* v. *Aeroquip Corp.,* 713 F.2d 1530, 1537, 218 USPQ 871, 877 (Fed. Cir. 1983), the Court noted that ''the question under 35 U.S.C. § 103 is not whether the differences [between the claimed invention and the prior art] would have been obvious'' but ''whether the claimed invention *as a whole* would have been obvious.'' (emphasis in original).

[17] See, *Ryko Manufacturing Co.* v. *Nu-Star Inc.,* 950 F.2d 714, 718, 21 USPQ2d 1053, 1057 (Fed. Cir. 1991)(''The importance of resolving the level of ordinary skill in the art lies in the necessity of maintaining objectivity in the obviousness inquiry.''); *Uniroyal Inc.* v. *Rudkin-Wiley Corp.,* 837 F.2d 1044, 1050, 5 USPQ2d 1434, 1438 (Fed. Cir. 1988) (evidence must be viewed from position of ordinary skill, not of an expert).

[18] E.g., *Ochiai,* 71 F.3d at 1569–70, 37 USPQ2d at 1131; *Deuel,* 51 F.3d at 1557, 34 USPQ2d at 1214 (''[A] *prima facie* case of unpatentability requires that the teachings of the prior art suggest *the claimed compounds* to a person of ordinary skill in the art.'' (emphasis in original)); *Jones,* 958 F.2d at 351, 21 USPQ2d at 1943–44 (Fed. Cir. 1992); *Dillon,* 919 F.2d at 692, 16 USPQ2d at 1901; *In re Lalu,* 747 F.2d 703, 705, 223 USPQ 1257, 1258 (Fed. Cir. 1984)(''The prior art must provide one of ordinary skill in the art

the motivation to make the proposed molecular modifications needed to arrive at the claimed compound.''). See also *In re Kemps,* 97 F.3d 1427, 1430, 40 USPQ2d 1309, 1311 (Fed. Cir. 1996)(discussing motivation to combine).

[19] See, e.g., *Baird,* 16 F.3d at 383, 29 USPQ2d at 1552 (observing that ''it is not the mere number of compounds in this limited class which is significant here but, rather, the total circumstances involved'').

[20] *Id.*

[21] See, e.g., *Deuel,* 51 F.3d at 1558–59, 34 USPQ2d at 1215 (''No particular one of these DNAs can be obvious unless there is something in the prior art to lead to the particular DNA and indicate that it should be prepared.''); *Baird,* 16 F.3d at 382–83, 29 USPQ2d at 1552; *Bell,* 991 F.2d at 784, 26 USPQ2d at 1531 (''Absent anything in the cited prior art suggesting which of the 10^{36} possible sequences suggested by Rinderknecht corresponds to the IGF gene, the PTO has not met its burden of establishing that the prior art would have suggested the claimed sequences.'').

[22] *In re Petering,* 301 F.2d 676, 681, 133 USPQ 275, 280 (CCPA 1962)(emphasis in original). More specifically, the court in *Petering* stated:

''A simple calculation will show that, excluding isomerism within certain of the R groups, the limited class we find in Karrer contains only 20 compounds. However, we wish to point out that it is not the mere number of compounds in this limited class which is significant here but, rather, the total circumstances involved, including such factors as the limited number of variations for R, only two alternatives for Y and Z, no alternatives for the other ring positions, and a large unchanging parent structural nucleus. *With these circumstances in mind,* it is our opinion that Karrer has described to those with ordinary skill in this art each of the various permutations here involved as fully as if he had drawn each structural formula or had written each name.''

Id. (emphasis in original).

Accord *In re Schaumann,* 572 F.2d 312, 316, 197 USPQ 5, 9 (CCPA 1978)(prior art genus encompassing claimed species which disclosed preference for lower alkyl secondary amines and properties possessed by the claimed compound constituted description of claimed compound for purposes of 35 U.S.C. § 102(b)). C.f., *In re Ruschig,* 343 F.2d 965, 974, 145 USPQ 274, 282 (CCPA 1965)(Rejection of claimed compound in light of prior art genus based on *Petering* is not appropriate where the prior art does not disclose a small recognizable class of compounds with common properties.).

[23] An express teaching may be based on a statement in the prior art reference such as an art recognized equivalence. For example, see *Merck & Co.* v. *Biocraft Labs.,* 874 F.2d 804, 807, 10 USPQ2d 1843, 1846 (Fed. Cir. 1989) (holding claims directed to diuretic compositions comprising a specific mixture of amiloride and hydrochlorothiazide were obvious over a prior art reference expressly teaching that amiloride was a pyrazinoylguanidine which could be co-administered with potassium excreting diuretic agents, including hydrochlorothiazide which was a named example, to produce a diuretic with desirable sodium and potassium eliminating properties). See also, *In re Kemps,* 97 F.3d 1427, 1430, 40 USPQ2d 1309, 1312 (Fed. Cir. 1996)(holding there is sufficient motivation to combine teachings of prior art to achieve claimed invention where one reference specifically refers to the other).

[24] *E.g., Dillon,* 919 F.2d at 696, 16 USPQ2d at 1904. See also *Deuel,* 51 F.3d at 1558, 34 USPQ2d at 1214 (''Structural relationships may provide the requisite motivation or suggestion to modify known compounds to obtain new compounds. For example, a prior art compound may suggest its homologs because homologs often have similar properties and therefore chemists of ordinary skill would ordinarily contemplate making them to try to obtain compounds with improved properties.'').

[25] *E.g., Dillon,* 919 F.2d at 693, 16 USPQ2d at 1901.

[26] See *id.*

[27] *E.g., In re Jones,* 958 F.2d 347, 350, 21 USPQ2d 1941, 1943 (Fed. Cir. 1992) (reversing obviousness rejection of novel dicamba salt with acyclic structure over broad prior art genus encompassing claimed salt, where disclosed examples of genus were dissimilar in structure, lacking an ether linkage or being cyclic); *In re Susi,* 440 F.2d 442, 445, 169 USPQ 423, 425 (CCPA 1971)(the difference from the particularly preferred subgenus of the prior art was a hydroxyl group, a difference conceded by applicant ''to be of little importance.'').

In the area of biotechnology, an exemplified species may differ from a claimed species by a conservative substitution (''the replacement in a protein of one amino acid by another, chemically similar, amino acid * * * [which] is generally expected to lead to either no change or only a small change in the properties of the protein.'' *Dictionary of Biochemistry and Molecular Biology* 97 (John Wiley & Sons, 2d ed. 1989)). The effect of a conservative substitution on protein function depends on the nature of the substitution and its location in the chain. Although at some locations a conservative substitution may be benign, in some proteins only one amino acid is allowed at a given position. For example, the gain or loss of even one methyl group can destabilize the structure if close packing is required in the interior of domains. James Darnell et al., *Molecular Cell Biology* 51 (2d ed. 1990).

[28] E.g., *Dillon,* 919 F.2d at 696, 16 USPQ2d at 1904 (and cases cited therein). C.f. *Baird,* 16 F.3d at 382–83, 29 USPQ2d at 1552 (disclosure of dissimilar species can provide teaching away).

[29] *Baird,* 16 F.3d at 382–83, 29 USPQ2d at 1552 (reversing obviousness rejection of species in view of large size of genus and disclosed ''optimum'' species which differed greatly from and were more complex than the claimed species); *Jones,* 958 F.2d at 350, 21 USPQ2d at 1943 (reversing obviousness rejection of novel dicamba salt with acyclic structure over broad prior art genus encompassing claimed salt, where disclosed examples of genus were dissimilar in structure, lacking an ether linkage or being cyclic).

[30] *Baird,* 16 F.3d at 382, 29 USPQ2d at 1552. See also *Jones,* 958 F.2d at 350, 21 USPQ2d at 1943 (disclosed salts of genus held not sufficiently similar in structure to render claimed species *prima facie* obvious).

[31] For example, a claimed tetra-orthoester fuel composition was held to be obvious in light of a prior art tri-orthoester fuel composition based on their structural and chemical similarity and similar use as fuel additives. *Dillon,* 919 F.2d at 692–93, 16 USPQ2d at 1900–02.

Likewise, claims to amitriptyline used as an antidepressant were held obvious in light of the structural similarity to imipramine, a known antidepressant prior art compound, where both compounds were tricyclic dibenzo compounds and differed structurally only in the replacement of the unsaturated carbon atom in the center ring of amitriptyline with a nitrogen atom in imipramine. *In re Merck & Co.,* 800 F.2d 1091, 1096–97, 231 USPQ 375, 378–79 (Fed. Cir. 1986).

Other structural similarities have been found to support a *prima facie* case of obviousness. E.g., *In re May,* 574 F.2d 1082, 1093–95, 197 USPQ 601, 610–11 (CCPA 1978) (stereoisomers); *In re Wilder,* 563 F.2d 457, 460, 195 USPQ 426, 429 (CCPA 1977)(adjacent homologs and structural isomers); *In re Hoch,* 428 F.2d 1341, 1344, 166 USPQ 406, 409 (CCPA 1970)(acid and ethyl ester); *In re Druey,* 319 F.2d 237, 240, 138 USPQ 39, 41 (CCPA 1963)(omission of methyl group from pyrazole ring).

[32] *Id.*

[33] *Dillon,* 919 F.2d at 697, 16 USPQ2d at 1905; *In re Stemniski,* 444 F.2d 581, 586, 170 USPQ 343, 348 (CCPA 1971).

[34] *In re Albrecht,* 514 F.2d 1389, 1392, 1395–96, 185 USPQ 585, 587, 590 (CCPA 1975)(The prior art compound so irritated the skin that it could not be regarded as useful for the disclosed anesthetic purpose, and therefore a person skilled in the art would not have been motivated to make related compounds.); *Stemniski,* 444 F.2d at 586, 170 USPQ at 348 (close structural similarity alone is not sufficient to create a *prima facie* case of obviousness when the reference compounds lack utility, and thus there is no motivation to make related compounds.).

[35] *Dillon,* 919 F.2d at 697, 16 USPQ2d at 1904–05 (and cases cited therein).

[36] E.g., *id.*

[37] *Id.* at 692, 16 USPQ2d at 1900–01.

[38] *Dillon,* 919 F.2d at 693, 696, 16 USPQ2d at 1901, 1904. See also *In re Grabiak,* 769 F.2d 729, 731, 226 USPQ 870, 871 (Fed. Cir. 1985)(''When chemical compounds have 'very close' structural similarities and similar utilities, without more a *prima facie* case may be made.'').

[39] *Dillon,* 919 F.2d at 697–98, 16 USPQ2d at 1905; *In re Wilder,* 563 F.2d 457, 461, 195 USPQ 426, 430 (CCPA 1977); *In re Linter,* 458 F.2d 1013, 1016, 173 USPQ 560, 562 (CCPA 1972).

[40] See, e.g., *Dillon,* 919 F.2d at 692–97, 16 USPQ2d at 1901–05; *In re Grabiak,* 769 F.2d 729, 732–33, 226 USPQ 870, 872 (Fed. Cir. 1985).

[41] *See e.g.,In re May,* 574 F.2d 1082, 1094, 197 USPQ 601, 611 (CCPA 1978)(*prima facie*

obviousness of claimed analgesic compound based on structurally similar prior art isomer was rebutted with evidence demonstrating that analgesia and addiction properties could not be reliably predicted on the basis of chemical structure); *In re Schechter,* 205 F.2d 185, 191, 98 USPQ 144, 150 (CCPA 1953)(unpredictability in the insecticide field, with homologs, isomers and analogs of known effective insecticides having proven ineffective as insecticides, was considered as a factor weighing against a conclusion of obviousness of the claimed compounds).

[42] See, e.g., *In re O'Farrell,* 853 F.2d 894, 903, 7 USPQ2d 1673, 1681 (Fed. Cir. 1988).

[43] *In re Bell,* 991 F.2d 781, 784, 26 USPQ2d 1529, 1531 (Fed. Cir. 1993); *In re Kulling,* 897 F.2d 1147, 1149, 14 USPQ2d 1056, 1057 (Fed. Cir. 1990).

[44] *Kulling,* 897 F.2d at 1149, 14 USPQ2d at 1058; *Panduit Corp.* v. *Dennison Mfg. Co.,* 810 F.2d 1561, 1579 n.42, 1 USPQ2d 1593, 1606 n.42 (Fed. Cir. 1987).

[45] E.g., *Dillon,* 919 F.2d at 692, 16 USPQ2d at 1901.

[46] *In re Soni,* 54 F.3d 746, 750, 34 USPQ2d 1684, 1687 (Fed. Cir. 1995).

[47] *In re Chu,* 66 F.3d 292, 299, 36 USPQ2d 1089, 1094–95 (Fed. Cir. 1995).

[48] E.g., *Soni,* 54 F.3d at 750, 34 USPQ2d at 1687; *In re Piasecki,* 745 F.2d 1468, 1474, 223 USPQ 785, 789–90 (Fed. Cir. 1984).

[49] E.g., *In re Huang,* 100 F.3d 135, 139–40, 40 USPQ2d 1685, 1689 (Fed. Cir. 1996); *In re De Blauwe,* 736 F.2d 699, 705, 222 USPQ 191, 196 (Fed. Cir. 1984).

[50] E.g., *In re Soni,* 54 F.3d 746, 750, 34 USPQ2d 1684, 1687 (Fed. Cir. 1995) (error not to consider evidence presented in the specification). C.f., *In re Alton,* 76 F.3d 1168, 37 USPQ2d 1578 (Fed. Cir. 1996)(error not to consider factual evidence submitted to counter a section 112 rejection); *In re Beattie,* 974 F.2d 1309, 1313, 24 USPQ2d 1040, 1042–43 (Fed. Cir. 1992)(Office personnel should consider declarations from those skilled in the art praising the claimed invention and opining that the art teaches away from the invention.); *Piasecki,* 745 F.2d at 1472, 223 USPQ at 788 (''[Rebuttal evidence] may relate to any of the *Graham* factors including the so-called secondary considerations.'').

[51] *Graham* v. *John Deere Co.,* 383 U.S. at 17, 148 USPQ at 467. See also, e.g., *In re Piasecki,* 745 F.2d 1468, 1473, 223 USPQ 785, 788 (Fed. Cir. 1984) (commercial success).

[52] Rebuttal evidence may consist of a showing that the claimed compound possesses unexpected properties. *Dillon,* 919 F.2d at 692–93, 16 USPQ2d at 1901. A showing of unexpected results must be based on evidence, not argument or speculation. *In re Mayne,* 104 F.3d 1339, 1343–44, 41 USPQ2d 1451, 1455–56 (Fed. Cir. 1997)(conclusory statements that claimed compound possesses unusually low immune response or unexpected biological activity that is unsupported by comparative data held insufficient to overcome prima facie case of obviousness).

[53] E.g., *In re GPAC,* 57 F.3d 1573, 1580, 35 USPQ2d 1116, 1121 (Fed. Cir. 1995); *Hybritech Inc.* v. *Monoclonal Antibodies,* 802 F.2d 1367, 1380, 231 USPQ 81, 90 (Fed. Cir. 1986), cert. denied, 480 U.S. 947 (1987).

[54] E.g., *In re Oelrich,* 579 F.2d 86, 91–92, 198 USPQ 210, 214 (CCPA 1978) (Expert opinions regarding the level of skill in the art were probative of the nonobviousness of the claimed invention.); *Piasecki,* 745 F.2d at 1471, 1473–74, 223 USPQ at 790 (Evidence of non-technological nature is pertinent to the conclusion of obviousness. The declarations of those skilled in the art regarding the need for the invention and its reception by the art were improperly discounted by the Board); *Beattie,* 974 F.2d at 1313, 24 USPQ2d at 1042–43 (Seven declarations provided by music teachers opining that the art teaches away from the claimed invention must be considered, but were not probative because they did not contain facts and did not deal with the specific prior art that was the subject of the rejection.).

[55] A conclusion of obviousness requires that the reference(s) relied upon be enabling in that it put the public in possession of the claimed invention. The court in *In re Hoeksema,* 399 F.2d 269, 274, 158 USPQ 596, 601 (CCPA 1968), stated:

''Thus, upon careful reconsideration it is our view that if the prior art of record fails to disclose or render obvious a method for making a claimed compound, at the time the invention was made, it may not be legally concluded that the compound itself is in the possession of the public. [footnote omitted.] In this context, we say that the absence of a known or obvious process for making the claimed compounds overcomes a presumption that the compounds are obvious, based on close relationships between their structures and those of prior art compounds.''

The *Hoeksema* court further noted that once a *prima facie* case of obviousness is made by the PTO through citation of references, the burden is on the applicant to produce contrary evidence establishing that the reference being relied on would not enable a skilled artisan to produce the different compounds claimed. *Id.* at 274–75, 158 USPQ at 601. See also *Ashland Oil, Inc.* v. *Delta Resins & Refractories, Inc.,* 776 F.2d 281, 295, 297, 227 USPQ 657, 666, 667 (Fed. Cir. 1985) (citing Hoeksema for the proposition above); *In re Grose,* 592 F.2d 1161, 1168, 201 USPQ 57, 63–64 (CCPA 1979) (''One of the assumptions underlying a prima facie obviousness rejection based upon a structural relationship between compounds, such as adjacent homologs, is that a method disclosed for producing one would provide those skilled in the art with a method for producing the other. * * * Failure of the prior art to disclose or render obvious a method for making any composition of matter, whether a compound or a mixture of compounds like a zeolite, precludes a conclusion that the composition would have been obvious.'')

[56] *Id.* See also *In re Alton,* 76 F.3d 1168, 1174–75, 37 USPQ2d 1578, 1582–83 (Fed. Cir. 1996).

[57] The Federal Circuit has acknowledged that applicant bears the burden of establishing nexus, stating:

''In the *ex parte* process of examining a patent application, however, the PTO lacks the means or resources to gather evidence which supports or refutes the applicant's assertion that the sales constitute commercial success. *C.f. Ex parte Remark,* 15 USPQ2d 1498, 1503 ([BPAI] 1990)(evidentiary routine of shifting burdens in civil proceedings inappropriate in *ex parte* prosecution proceedings because examiner has no available means for adducing evidence). Consequently, the PTO must rely upon the applicant to provide hard evidence of commercial success.''

In re Huang, 100 F.3d 135, 139–40, 40 USPQ2d 1685, 1689 (Fed. Cir. 1996). See also *GPAC,* 57 F.3d at 1580, 35 USPQ2d at 1121; *In re Paulsen,* 30 F.3d 1475, 1482, 31 USPQ2d 1671, 1676 (Fed. Cir. 1994).

[58] E.g., *Paulsen,* 30 F.3d at 1482, 31 USPQ2d at 1676. (Evidence of commercial success of articles not covered by the claims subject to the 35 U.S.C. § 103 rejection was not probative of nonobviousness).

[59] E.g., *In re Kulling,* 897 F.2d 1147, 1149, 14 USPQ2d 1056, 1058 (Fed. Cir. 1990); *In re Grasselli,* 713 F.2d 731, 743, 218 USPQ 769, 777 (Fed. Cir. 1983). *In re Soni,* 54 F.3d 746, 34 USPQ2d 1684 (Fed. Cir. 1995) does not change this analysis. In *Soni,* the Court declined to consider the Office's argument that the evidence of non-obviousness was not commensurate in scope with the claim because it had not been raised by the Examiner. 54 F.3d at 751, 34 USPQ2d at 1688.

When considering whether proffered evidence is commensurate in scope with the claimed invention, Office personnel should not require the applicant to show unexpected results over the entire range of properties possessed by a chemical compound or composition.

E.g., *In re Chupp,* 816 F.2d 643, 646, 2 USPQ2d 1437, 1439 (Fed. Cir. 1987). Evidence that the compound or composition possesses superior and unexpected properties in one of a spectrum of common properties can be sufficient to rebut a *prima facie* case of obviousness. *Id.*

For example, a showing of unexpected results for a single member of a claimed subgenus, or a narrow portion of a claimed range would be sufficient to rebut a *prima facie* case of obviousness if a skilled artisan ''could ascertain a trend in the exemplified data that would allow him to reasonably extend the probative value thereof.'' *In re Clemens,* 622 F.2d 1029, 1036, 206 USPQ 289, 296 (CCPA 1980) (Evidence of the unobviousness of a broad range can be proven by a narrower range when one skilled in the art could ascertain a trend that would allow him to reasonably extend the probative value thereof.). But see, *Grasselli,* 713 F.2d at 743, 218 USPQ at 778 (evidence of superior properties for sodium containing composition insufficient to establish the non-obviousness of broad claims for a catalyst with ''an alkali metal'' where it was well known in the catalyst art that different alkali metals were not interchangeable and applicant had shown unexpected results only for sodium containing materials); *In re Greenfield,* 571 F.2d 1185, 1189, 197 USPQ 227, 230 (CCPA 1978)(evidence of superior properties in one species insufficient to establish the nonobviousness of a subgenus containing hundreds of compounds); *In re*

Lindner, 457 F.2d 506, 508, 173 USPQ 356, 358 (CCPA 1972)(one test not sufficient where there was no adequate basis for concluding the other claimed compounds would behave the same way).

60. E.g., *Chupp*, 816 F.2d at 646, 2 USPQ2d at 1439; *Clemens*, 622 F.2d at 1036, 206 USPQ at 296.

61. Usually, a showing of unexpected results is sufficient to overcome a *prima facie* case of obviousness. See, e.g., *In re Albrecht*, 514 F.2d 1389, 1396, 185 USPQ 585, 590 (CCPA 1975). However, where the claims are not limited to a particular use, and where the prior art provides other motivation to select a particular species or subgenus, a showing of a new use may not be sufficient to confer patentability. See *Dillon*, 919 F.2d at 692, 16 USPQ2d at 1900–01.

62. *Piasecki*, 745 F.2d at 1473, 223 USPQ at 788.

63. E.g., *Piasecki*, 745 F.2d at 1472–73, 223 USPQ at 788; *In re Eli Lilly & Co.*, 902 F.2d 943, 945, 14 USPQ2d 1741, 1743 (Fed. Cir. 1990).

64. E.g., *Piasecki*, 745 F.2d at 1472, 223 USPQ at 788; *Eli Lilly*, 902 F.2d at 945, 14 USPQ2d at 1743.

65. *Dillon*, 919 F.2d at 693, 16 USPQ2d at 1901; *In re Mills*, 916 F.2d 680, 683, 16 USPQ2d 1430, 1433 (Fed. Cir. 1990).

Dated: August 26, 1998.

Bruce A. Lehman,

Assistant Secretary of Commerce and Commissioner of Patents and Trademarks.

[FR Doc. 98–23681 Filed 9–2–98; 8:45 am]

BILLING CODE 3510–16–P

COMMODITY FUTURES TRADING COMMISSION

Chicago Mercantile Exchange: Proposed Amendments to the Cash Settlement Provisions of the CME Russian Ruble Futures Contract

AGENCY: Commodity Futures Trading Commission.

ACTION: Notice of availability of proposed amendments to the terms and conditions of commodity futures contract.

SUMMARY: The Chicago Mercantile Exchange (CME or Exchange) has submitted proposed amendments related to the cash settlement provisions of its Russian Ruble futures contract. If the Moscow Interbank Currency Exchange (MICEX) did not determine and/or disseminate a rubles per dollar spot exchange rate on the last day of trading, then, under the proposal, the CME would set the cash settlement price based on the results of its survey of Russian ruble-US dollar interbank market participants used to determine the ruble/dollar exchange rate on that day. The Director of the Division of Economic Analysis (Division) of the Commission, acting pursuant to the authority delegated by Commission Regulation 140.96, has determined that publication of the proposals for comment is in the public interest, will assist the Commission in considering the views of interested persons, and is consistent with the purpose of the Commodity Exchange Act.

DATES: Comments must be received on or before September 8, 1998.

ADDRESSES: Interested persons should submit their views and comments to Jean A. Webb, Secretary, Commodity Futures Trading Commission, Three Lafayette Centre, 1155 21st Street, NW Washington, DC 20581. In addition, comments may be sent by facsimile transmission to facsimile number (202) 418–5521, or by electronic mail to secretary@cftc.gov. Reference should be made to the amendments to the CME Russian Ruble futures contract.

FOR FURTHER INFORMATION CONTACT: Please contact Thomas Leahy of the Division of Economic Analysis, Commodity Futures Trading Commission, Three Lafayette Centre, 1155 21st Street NW, Washington, 20581, telephone (202) 418–5278. Facsimile number: (202) 418–5527. Electronic mail: tleahy@cftc.gov.

SUPPLEMENTARY INFORMATION: Under current rules for the CME ruble futures contract, the cash settlement price is the reciprocal of the spot rate of Russian rubles per US dollar determined by the Moscow Interbank Currency Exchange on the last day of trading. In the event that MICEX does not determine and/or disseminate that spot exchange rate, CME rules provide for the declaration of an emergency pursuant to existing Exchange rule 3025.J.

To preclude an emergency declaration, the Exchange proposes to adopt in its rules, backup procedures that would be used if the MICEX does not determine and/or disseminate the spot rate of Russian rubles per US dollar on the last trading day of the subject contract. The backup cash settlement price would be based on the exchange rate derived from the CME's daily survey of banks. The daily CME survey was initiated on August 28, 1998.

The daily CME survey is conducted as follows. The CME surveys eight reference institutions from a list of at least twelve institutions that are active participants in the market for spot and/or non-deliverable forward markets. At 11:00 a.m. (Moscow time), each randomly selected participant is asked for its perception of the prevailing bid and offer for a typically sized Russian ruble per US dollar spot transaction in the Moscow marketplace. The midpoint of each bid/offer pair is determined, and the highest two and the lowest two midpoints are eliminated. The remaining four midpoints are averaged and the reciprocal of that average is the daily rate, which could be used as the final settlement price, as noted above.

If the CME is unable to obtain eight responses, but is able to obtain at least five responses, then the CME determines the midpoints of each bid/offer pair and eliminates the highest and the lowest midpoint and average the remaining midpoints. The daily rate, that may be the final settlement price, is the reciprocal of that average. If fewer than five responses are received, then the CME would invoke its emergency provisions.

The CME proposes to implement the changes to the proposed amendments to the cash settlement provisions immediately upon Commission approval for application to all existing and newly listed contracts. The first contract month to which the amendments could apply is the September 1998 contract which expires on September 15, 1998.

The Division requests comment on the proposed changes and implementation plan. The comment period is abbreviated in view of the short time period remaining to the expiration date of the September contract and in view of the recent suspension by MICEX of its daily fixing of the rubles per dollar exchange rate.

Copies of the proposed amendments will be available for inspection at the Office of the Secretariat, Commodity Futures Trading Commission, Three Lafayette Centre, 1155 21st St., NW, Washington, D.C. 20581. Copies of the terms and conditions can be obtained through the Office of the Secretariat by mail at the above address or by phone at (202) 418–5097.

Other materials submitted by the CME may be available upon request pursuant to the Freedom of Information Act (5 U.S.C. 552) and the Commission's regulations thereunder (17 C.F.R. Part 145 (1987)), except to the extent they are entitled to confidential treatment as set forth in 17 C.F.R. 145.5 and 145.9. Requests for copies of such materials should be made to the FOI, Privacy and Sunshine Act Compliance Staff of the Office of the Secretariat at the Commission's headquarters in accordance with 17 C.F.R. 145.7 and 145.8.

Any person interested in submitting written data, views, or arguments on the proposed amendments, or with respect to other materials submitted by the CME, should send such comments to Jean A. Webb, Secretary, Commodity Futures Trading Commission, Three

Lafayette Centre, 1155 21st St., NW, Washington, DC 20581 by the specified date.

Issued in Washington, DC, on September 1, 1998.

Steven Manaster,

Director.

[FR Doc. 98–23937 Filed 9–2–98; 8:45 am]

BILLING CODE 6351–01–M

DEPARTMENT OF DEFENSE

Office of the Secretary

Proposed Collection; Comment Request

AGENCY: Defense Finance and Accounting Service.

ACTION: Notice.

SUMMARY: In compliance with Section 3506(c)(2)(A) of the Paperwork Reduction Act of 1995, the Defense Finance and Accounting Service announces the proposed public information collection and seeks public comment on the provisions thereof. Comments are invited on: (a) Whether the proposed collection of information is necessary for the proper performance of the functions of the agency, including whether the information shall have practical utility; (b) the accuracy of the agency's estimate of the burden of the proposed information collection; (c) ways to enhance the quality, utility and clarity of the information to be collected; and (d) ways to minimize the burden of the information collection on respondents, including through the use of automated collection techniques or other forms of information technology.

DATES: Consideration will be given to all comments received by November 2, 1998.

ADDRESSES: Written comments and recommendations on the proposed information collection should be sent to the Defense Finance and Accounting Service—Denver Center, (FYCT) ATTN: Ms. Vicki Holifield, 6760 East Irvington Place, Denver, CO 80279–3000.

FOR FURTHER INFORMATION CONTACT: To request more information on this proposed information collection or to obtain a copy of the proposal and associated collection instruments, please write to the above address, or call Ms. Vicki Holifield, 303–676–4743.

Title, Associated Form, and OMB Number: Waiver/Remission of Indebtedness Application.

Needs and uses: Used by current or former DoD civilian employees or military members to request waiver or remission of an indebtedness owed to the Department of Defense. Under 5 U.S.C. 5584, 10 U.S.C. 2774, and 32 U.S.C. 716, certain debts arising out of erroneous payments may be waived. Under 10 U.S.C. 4837, 10 U.S.C. 6161, and 10 U.S.C. 9837, certain debts may be remitted. Information obtained through this form is used in adjudicating the request for waiver or remission. Remissions apply only to active duty military members, and thus are not covered under the Paperwork Reduction Act of 1995.

Affected Public: Individuals.

Annual Burden Hours: 23,000 hours.

Number of Respondents: 11,500.

Responses per Respondent: 1.

Average Burden per Response: 2 hours.

Frequency: On occasion.

SUPPLEMENTARY INFORMATION:

Summary of Information Collection

The referenced United States Code sections on waivers provide for an avenue of relief for individuals who owe debts to the United States which resulted from erroneous payments. Criteria for waiver of a debt includes a determination that there is no indication of fraud, misrepresentation, fault, or lack of good faith on the part of the individual owing the debt or any other person interested in obtaining a waiver. Information obtained through the proposed collection is needed in order to adjudicate the waiver request under the law.

Dated: August 28, 1998.

Patricia L. Toppings,

Alternate OSD Federal Register Liaison Officer, Department of Defense.

[FR Doc. 98–23701 Filed 9–2–98; 8:45 am]

BILLING CODE 5000–04–M

DEPARTMENT OF DEFENSE

Office of the Secretary

Meeting of the Historical Records Declassification Advisory Panel

AGENCY: Department of Defense, Historical Advisory Committee.

ACTION: Notice.

SUMMARY: Notice is hereby given of the forthcoming meeting of the Historical Records Declassification Advisory Panel. The purpose of this meeting is to discuss recommendations to the Department of Defense on topical areas of records of interest that, from a historical perspective, would be of the greatest benefit if declassified. This is the third session held in 1998. The OSD Historian will chair this meeting.

DATES: Thursday, September 24, 1998; 2 p.m. until 4 p.m.; Friday, September 25, 1998; 9 a.m. until 12 p.m. *Time:* The HRDAP sessions will be closed to the public due to the necessity to hear classified and sensitive reports in accordance with 5 U.S.C., Sec 552b(c)(1) (1982).

ADDRESSES: The Pentagon, Washington, DC.

FOR FURTHER INFORMATION CONTACT: Mrs. Carroll Lee, Room 1D760B, Office of the Deputy Assistant Secretary of Defense (Security and Information Operations), Office of the Assistant Secretary of Defense (Command, Control, Communications and Intelligence), 6000 Defense Pentagon, Washington, DC 20301–6000, telephone (703) 693–0368.

Dated: August 28, 1998.

L.M. Bynum,

Alternate OSD Federal Register Liaison Officer, Department of Defense.

[FR Doc. 98–23702 Filed 9–2–98; 8:45 am]

BILLING CODE 5000–04–M

DEPARTMENT OF DEFENSE

Office of the Secretary

Revised Non-Foreign Overseas Per Diem Rates

AGENCY: DoD, Per Diem, Travel and Transportation Allowance Committee.

ACTION: Notice of revised non-foreign overseas per diem rates.

SUMMARY: The Per Diem, Travel and Transportation Allowance Committee is publishing Civilian Personnel Per Diem Bulletin Number 203. This bulletin lists revisions in the per diem rates prescribed for U.S. Government employees for official travel in Alaska, Hawaii, Puerto Rico, the Northern Mariana Islands and Possessions of the United States. AEA changes announced in Bulletin Number 194 remain in effect. Bulletin Number 203 is being published in the **Federal Register** to assure that travels are paid per diem at the most current rates.

EFFECTIVE DATE: September 1, 1998.

SUPPLEMENTARY INFORMATION: This document gives notice of revisions in per diem rates prescribed by the Per Diem Travel and Transportation Allowance Committee for non-foreign areas outside the continental United States. It supersedes Civilian Personnel Per Diem Bulletin Number 202. Distribution of Civilian Personnel Per Diem Bulletins by mail was discontinued. Per Diem Bulletins published periodically in the **Federal Register** now constitute the only

notification of revisions in per diem rates to agencies and establishments outside the Department of Defense. For more information or questions about per diem rates, please contact your local travel office. The text of the Bulletin follows:

BILLING CODE 5000–04–M

Maximum Per Diem Rates for official travel in Alaska, Hawaii, the Commonwealths of Puerto Rico and the Northern Mariana Islands and Possessions of the United States by Federal Government civilian employees.

LOCALITY	MAXIMUM LODGING AMOUNT (A) +	M&IE RATE (B) =	MAXIMUM PER DIEM RATE (C)	EFFECTIVE DATE
ALASKA:				
ANCHORAGE [INCL NAV RES]				
05/01 -- 09/30	151	62	213	06/01/98
10/01 -- 04/30	86	56	142	03/01/98
BARROW	110	70	180	06/01/98
BETHEL	103	65	168	03/01/98
CORDOVA	85	62	147	03/01/98
CRAIG				
05/01 -- 08/31	95	66	161	05/01/97
09/01 -- 04/30	79	64	143	05/01/97
DENALI NATIONAL PARK				
06/01 -- 08/31	115	52	167	03/01/98
09/01 -- 05/31	90	50	140	03/01/98
DILLINGHAM	95	59	154	08/01/98
DUTCH HARBOR-UNALASKA	110	69	179	03/01/98
EARECKSON AIR STATION	72	55	127	03/01/98
EIELSON AFB				
05/15 -- 09/15	121	60	181	03/01/98
09/16 -- 05/14	75	56	131	03/01/98
ELMENDORF AFB				
05/01 -- 09/30	151	62	213	06/01/98
10/01 -- 04/30	86	56	142	03/01/98
FAIRBANKS				
05/15 -- 09/15	121	60	181	03/01/98
09/16 -- 05/14	75	56	131	03/01/98
FT. RICHARDSON				
05/01 -- 09/30	151	62	213	06/01/98
10/01 -- 04/30	86	56	142	03/01/98
FT. WAINWRIGHT				
05/15 -- 09/15	121	60	181	03/01/98
09/16 -- 05/14	75	56	131	03/01/98
GLENNALLEN	86	53	139	08/01/97
HEALY				
06/01 -- 08/31	115	52	167	03/01/98
09/01 -- 05/31	90	50	140	03/01/98
HOMER				
05/01 -- 09/30	116	66	182	03/01/98
10/01 -- 04/30	87	64	151	03/01/98
JUNEAU	89	72	161	03/01/98
KENAI-SOLDOTNA				
04/01 -- 09/30	109	61	170	03/01/98
10/01 -- 03/31	74	59	133	03/01/98

Maximum Per Diem Rates for official travel in Alaska, Hawaii, the Commonwealths of Puerto Rico and the Northern Mariana Islands and Possessions of the United States by Federal Government civilian employees.

LOCALITY	MAXIMUM LODGING AMOUNT (A) +	M&IE RATE (B) =	MAXIMUM PER DIEM RATE (C)	EFFECTIVE DATE
KENNICOTT	149	84	233	08/01/97
KETCHIKAN				
05/01 -- 09/30	100	74	174	03/01/98
10/01 -- 04/30	85	73	158	03/01/98
KLAWOCK				
05/01 -- 08/31	95	66	161	05/01/97
09/01 -- 04/30	79	64	143	05/01/97
KODIAK				
04/16 -- 09/30	98	69	167	03/01/98
10/01 -- 04/15	88	68	156	03/01/98
KOTZEBUE				
05/16 -- 09/15	101	81	182	04/01/97
09/16 -- 05/15	90	80	170	04/01/97
KULIS AGS				
05/01 -- 09/30	151	62	213	06/01/98
10/01 -- 04/30	86	56	142	03/01/98
MCCARTHY	149	84	233	08/01/97
MURPHY DOME				
05/15 -- 09/15	121	60	181	03/01/98
09/16 -- 05/14	75	56	131	03/01/98
NOME	83	63	146	03/01/98
PETERSBURG	76	62	138	03/01/98
SEWARD				
05/01 -- 09/15	114	62	176	03/01/98
09/16 -- 04/30	78	59	137	03/01/98
SITKA-MT. EDGECOMBE				
04/01 -- 09/04	101	60	161	03/01/98
09/05 -- 03/31	83	59	142	03/01/98
SKAGWAY				
05/01 -- 09/30	100	74	174	03/01/98
10/01 -- 04/30	85	73	158	03/01/98
SPRUCE CAPE				
04/16 -- 09/30	98	69	167	03/01/98
10/01 -- 04/15	88	68	156	03/01/98
TANANA	83	63	146	03/01/98
UMIAT	125	107	232	08/01/97
VALDEZ				
05/15 -- 09/15	105	65	170	03/01/98
09/16 -- 05/14	84	62	146	03/01/98
WASILLA	79	72	151	03/01/98
WRANGELL				
05/01 -- 09/30	100	74	174	03/01/98
10/01 -- 04/30	85	73	158	03/01/98

Maximum Per Diem Rates for official travel in Alaska, Hawaii, the Commonwealths of Puerto Rico and the Northern Mariana Islands and Possessions of the United States by Federal Government civilian employees.

LOCALITY	MAXIMUM LODGING AMOUNT (A) +	M&IE RATE (B) =	MAXIMUM PER DIEM RATE (C)	EFFECTIVE DATE
[OTHER]	72	55	127	03/01/98
AMERICAN SAMOA:				
AMERICAN SAMOA	73	53	126	03/01/97
GUAM:				
GUAM (INCL ALL MIL INSTAL)	150	79	229	05/01/98
HAWAII:				
CAMP H M SMITH	110	61	171	07/01/97
EASTPAC NAVAL COMP TELE AREA	110	61	171	07/01/97
FT. DERUSSEY	110	61	171	07/01/97
FT. SHAFTER	110	61	171	07/01/97
HICKAM AFB	110	61	171	07/01/97
HONOLULU NAVAL & MC RES CTR	110	61	171	07/01/97
ISLE OF HAWAII: HILO	80	52	132	06/01/98
ISLE OF HAWAII: OTHER	100	54	154	06/01/98
ISLE OF KAUAI				
05/01 -- 11/30	115	62	177	06/01/98
12/01 -- 04/30	136	64	200	06/01/98
ISLE OF KURE	60	41	101	07/01/97
ISLE OF MAUI	112	64	176	06/01/98
ISLE OF OAHU	110	61	171	07/01/97
KANEOHE BAY MC BASE	110	61	171	07/01/97
KEKAHA PACIFIC MISSILE RANGE FAC				
05/01 -- 11/30	115	62	177	06/01/98
12/01 -- 04/30	136	64	200	06/01/98
KILAUEA MILITARY CAMP	80	52	132	06/01/98
LULUALEI NAVAL MAGAZINE	110	61	171	07/01/97
NAS BARBERS POINT	110	61	171	07/01/97
PEARL HARBOR [INCL ALL MILITARY]	110	61	171	07/01/97
SCHOFIELD BARRACKS	110	61	171	07/01/97
WHEELER ARMY AIRFIELD	110	61	171	07/01/97
[OTHER]	79	62	141	06/01/93
JOHNSTON ATOLL:				
JOHNSTON ATOLL	13	9	22	07/01/97
MIDWAY ISLANDS:				
MIDWAY ISLANDS [INCL ALL MIL]	60	41	101	07/01/97
NORTHERN MARIANA ISLANDS:				
ROTA	105	71	176	05/01/97
SAIPAN	170	78	248	05/01/97
[OTHER]	61	53	114	05/01/97

Maximum Per Diem Rates for official travel in Alaska, Hawaii, the Commonwealths of Puerto Rico and the Northern Mariana Islands and Possessions of the United States by Federal Government civilian employees.

LOCALITY	MAXIMUM LODGING AMOUNT (A) +	M&IE RATE (B) =	MAXIMUM PER DIEM RATE (C)	EFFECTIVE DATE
PUERTO RICO:				
BAYAMON				
04/16 -- 11/14	117	67	184	09/01/98
11/15 -- 04/15	148	70	218	09/01/98
CAROLINA				
04/16 -- 11/14	117	67	184	09/01/98
11/15 -- 04/15	148	70	218	09/01/98
FAJARDO [INCL CEIBA, LUQUILLO & HUMACAO]	82	60	142	03/01/98
FT. BUCHANAN [INCL GSA SVC CTR, GUAYNABO]				
04/16 -- 11/14	117	67	184	09/01/98
11/15 -- 04/15	148	70	218	09/01/98
LUIS MUNOZ MARIN IAP AGS				
04/16 -- 11/14	117	67	184	09/01/98
11/15 -- 04/15	148	70	218	09/01/98
MAYAGUEZ	94	60	154	06/01/98
PONCE	101	67	168	09/01/98
ROOSEVELT ROADS & NAV STA	82	60	142	03/01/98
SABANA SECA [INCL ALL MILITARY]				
04/16 -- 11/14	117	67	184	09/01/98
11/15 -- 04/15	148	70	218	09/01/98
SAN JUAN & NAV RES STA				
04/16 -- 11/14	117	67	184	09/01/98
11/15 -- 04/15	148	70	218	09/01/98
[OTHER]	66	57	123	09/01/98
VIRGIN ISLANDS (U.S.):				
ST. CROIX				
04/15 -- 12/14	107	75	182	08/01/98
12/15 -- 04/14	131	78	209	08/01/98
ST. JOHN				
04/15 -- 12/14	286	89	375	08/01/98
12/15 -- 04/14	413	102	515	08/01/98
ST. THOMAS				
04/15 -- 12/14	171	75	246	08/01/98
12/15 -- 04/14	285	87	372	08/01/98
WAKE ISLAND:				
WAKE ISLAND	60	32	92	09/01/98

L.M. BYNUM, Alternate OSD Federal Register Liaison Officer,
Department of Defense
August 28, 1998

[FR Doc. 98–23703 Filed 9–2–98; 8:45 am]
BILLING CODE 5000–04–C

DEPARTMENT OF DEFENSE

Department of the Air Force

HQ USAF Scientific Advisory Board Meeting

The Special S&T Review at Rome Meeting in support of the HQ USAF Scientific Advisory Board will meet at AFRL/RL in Rome, NY on October 16, 1998, from 8:00 a.m. to 5:00 p.m.

The purpose of the meeting is to gather information and receive briefings for Fall General Board Meeting.

The meeting will be closed to the public in accordance with Section 552b of Title 5, United States Code, specifically subparagraphs (1) and (4) thereof.

For further information, contact the HQ USAF Scientific Advisory Board Secretariat at (703) 697–8404.

Barbara A. Carmichael,

Alternate Air Force Federal Register Liaison Officer.

[FR Doc. 98–23799 Filed 9–2–98; 8:45 am]

BILLING CODE 3910–01–P

DELAWARE RIVER BASIN COMMISSION

Notice of Commission Meeting and Public Hearing

Notice is hereby given that the Delaware River Basin Commission will hold a public hearing on Wednesday, September 9, 1998. The hearing will be part of the Commission's regular business meeting which is open to the public and scheduled to begin at 1:30 p.m. in the Banquet Room of Arsenal on the Green Restaurant, 30 Market Street, New Castle, Delaware.

An informal conference among the Commissioners and staff will be held at 10:30 a.m. at the same location and will include a status report on Delaware's fisheries; discussion of the Commission's proposed Watershed Planning and Assessment Committee; and proposals concerning a non-tidal Delaware River nutrient study and development of dry weather TMDLs for the Christina Subbasin.

In addition to the subjects listed below which are scheduled for public hearing, the Commission will also address the following: swearing in of Carol R. Collier as the Commission's new Executive Director; Minutes of the August 12, 1998 business meeting; announcements; General Counsel's Report; report on Basin hydrologic conditions; consideration of resolutions concerning a non-tidal Delaware River nutrient study and development of dry weather TMDLs for the Christina Subbasin; and public dialogue.

The subjects of the hearing will be as follows:

Applications for Approval of the Following Projects Pursuant to Article 10.3, Article 11 and/or Section 3.8 of the Compact:

1. *Valley Township D–88–31 CP RENEWAL.* An application for the renewal of a ground water withdrawal project to supply up to 4.5 million gallons (mg)/30 days of water to the applicant's distribution system from Well Nos. V1, V2 and V4. Commission approval on October 26, 1988 was extended to ten years and will expire unless renewed. The applicant requests that the total withdrawal from all wells remain limited to 4.5 mg/30 days. The project is located in Valley Township, Chester County, Pennsylvania.

2. *Cloister Spring Water Company D–97–46.* A project to increase the withdrawal of water from an existing spring house intake, from approximately 100,000 gallons per day (gpd) to 300,000 gpd. The intake is located at Spring No. 3, one of several headwater springs at the Arrowhead Springs Farm which are tributary to Mill Creek in the Tulpehocken Creek watershed. The spring house is located just southeast of the intersection of West Bethany and South Fort Zellers Roads in Millcreek Township, Lebanon County, Pennsylvania. The withdrawal will be exported via tank truck and will continue to serve the applicant's bottling plant located in the City of Lancaster, Lancaster County, Pennsylvania in the Susquehanna River Basin.

3. *City of Trenton D–98–9 CP.* An application to expand the applicant's service area for both water supply and sewerage to include a portion of Hopewell Township, Mercer County, New Jersey. The applicant's water distribution system serves the City of Trenton and surrounding areas in Ewing, Lawrence and Hamilton Townships. Potable water will be provided to the project service area from the Delaware River via the applicant's existing filtration plant located near the Calhoun Street Bridge. Up to 1.35 million gallons per day of sewerage capacity will be provided to the project areas in Hopewell Township. The wastewater will be conveyed to the applicant's existing sewage treatment plant on Lamberton Road in the City of Trenton. The treated wastewater will continue to be discharged in Water Quality Zone 2 of the Delaware River, approximately 2.5 miles downstream of the applicant's water supply intake. Both the applicant's water withdrawal and discharge facilities have sufficient capacity to meet the needs of the proposed project.

Documents relating to these items may be examined at the Commission's offices. Preliminary dockets are available in single copies upon request. Please contact Thomas L. Brand at (609) 883–9500 ext. 221 concerning docket-related questions. Persons wishing to testify at this hearing are requested to register with the Secretary at (609) 883–9500 ext. 203 prior to the hearing.

Dated: August 25, 1998.

Susan M. Weisman,

Secretary.

[FR Doc. 98–23696 Filed 9–2–98; 8:45 am]

BILLING CODE 6360–01–P

DEPARTMENT OF EDUCATION

Advisory Committee on Student Financial Assistance; Meeting

AGENCY: Advisory Committee on Student Financial Assistance, Education.

ACTION: Notice of upcoming meeting.

SUMMARY: This notice sets forth the schedule and proposed agenda of the forthcoming partially closed meeting of the Advisory Committee on Student Financial Assistance. This notice also describes the functions of the Committee. Notice of this meeting is required under Section 10(a)(2) of the Federal Advisory Committee Act. This document is intended to notify the general public.

DATES AND TIMES: Monday, September 21, 1998, beginning at 8:30 a.m. and ending at 6 p.m., but closed from approximately 4:30 p.m. to 6 p.m.; and Tuesday, September 22, 1998, beginning at 8:30 a.m. and ending at approximately 2 p.m.

ADDRESSES: Embassy Suites Hotel, the Diplomat/Consulate Room, 1250 22nd Street, NW., Washington, DC 20037.

FOR FURTHER INFORMATION CONTACT: Dr. Brian K. Fitzgerald, Staff Director, Advisory Committee on Student Financial Assistance, Portals Building, 1280 Maryland Avenue, SW., Suite 601, Washington, DC 20202–7582, (202) 708–7439.

SUPPLEMENTARY INFORMATION: The Advisory Committee on Student Financial Assistance is established under Section 491 of the Higher Education Act of 1965 as amended by Pub. L. 100–50 (20 U.S.C. 1098). The Advisory Committee is established to provide advice and counsel to the Congress and the Secretary of Education on student financial aid matters,

including providing technical expertise with regard to systems of need analysis and application forms, making recommendations that will result in the maintenance of access to postsecondary education for low- and middle-income students, conducting a study of institutional lending in the Stafford Student Loan Program, and assisting with activities related to reauthorization of the Higher Education Act of 1965. As a result of the passage of the Higher Education Amendments of 1992, the Congress directed the Advisory Committee to assist with a series of special assessments and conduct an in-depth study of student loan simplification. The Advisory Committee fulfills its charge by conducting objective, nonpartisan, and independent analyses of important student aid issues. Also, with passage of the Omnibus Budget Reconciliation Act (OBRA) of 1993, Congress assigned the Advisory Committee the major task of evaluating the Ford Federal Direct Loan Program (FDLP) and the Federal Family Education Loan Program (FFELP). The Committee was directed to report to the Secretary and Congress on not less than an annual basis on the operation of both programs and submit a final report by January 1, 1997. The Committee submitted to Congress its final recommendations on the advisability of fully implementing the FDLP on December 11, 1996. In addition, Congress invited the Committee to submit recommendations pertaining to the 1998 reauthorization of the Higher Education Act. Specifically, Congress asked the Committee to identify proposals to improve access through delivery and identify and analyze the impact of proposals being developed by the Department of Education (ED) and the higher education community, among others. The Committee delivered its reauthorization recommendations to Congress on May 1, 1997. The Committee will continue to inform members and the higher education community about the current status of congressional and other legislative proposals and make recommendations to Congress and the Secretary of Education regarding the impact of these proposals on student aid policy.

The proposed agenda includes: (a) Discussion sessions on reauthorization of the Higher Education Act and its impact on students, institutions, ED, and all other participants in the student aid programs; and (b) discussion sessions addressing the Committee's agenda for fiscal year 1999 and other Committee business (e.g., election of officers, etc.). Space is limited and you are encouraged to register early if you plan to attend. You may register through Internet at ADV__COMSFA@ED.gov or Tracy__Deanna__Jones@ED.gov. Please include your name, title, affiliation, complete address (including Internet and e-mail—if available), and telephone and fax numbers. If you are unable to register through Internet, you may mail or fax your registration information to the Advisory Committee staff office at (202) 401–3467. Also, you may contact the Advisory Committee staff at (202) 708–7439. *The registration deadline is Tuesday, September 15, 1998.*

The Advisory Committee will meet in Washington, DC on September 21, 1998, from 8:30 a.m. until approximately 6 p.m., and on September 22, from 8:30 a.m. until approximately 2 p.m. The meeting will be closed to the public on September 21, from approximately 4:30 p.m. to 6 p.m. to discuss personnel matters. The ensuing discussions will relate to internal personnel rules and practices of an agency and will disclose information of a personal nature where disclosure would constitute a clearly unwarranted invasion of personal privacy if conducted in open session. Such matters are protected by exemptions (2) and (6) Section 552(b)(c) of Title 5 U.S.C.

A summary of the activities at the closed session and related matters which are informative to the public consistent with the policy of Title 5 U.S.C. 552(b) will be available to the public within fourteen days after the meeting.

Records are kept of all Committee proceedings, and are available for public inspection at the Office of the Advisory Committee on Student Financial Assistance, Portals Building, 1280 Maryland Avenue, SW., Suite 601, Washington, DC from the hours of 9 a.m. to 5:30 p.m., weekdays, except Federal holidays.

Dated: August 28, 1998.

Brian K. Fitzgerald,

Staff Director, Advisory Committee on Student Financial Assistance.

[FR Doc. 98–23704 Filed 9–2–98; 8:45 am]

BILLING CODE 4000–01–M

DEPARTMENT OF ENERGY

Federal Energy Regulatory Commission

[Docket No. ER98–4303–000, et al.]

Kansas City Power & Light Company, et al.; Electric Rate and Corporate Regulation Filings

August 26, 1998.

Take notice that the following filings have been made with the Commission:

1. Kansas City Power & Light Company

[Docket No. ER98–4303–000]

Take notice that on August 21, 1998, Kansas City Power & Light Company (KCPL), tendered for filing ten Service Agreements dated August 7, 1998 by KCPL.

KCPL proposes an effective date of November 1, 1998. This Agreement provides for the rates and charges for Firm Transmission Service by KCPL for wholesale transactions.

In its filing, KCPL states that the rates included in the above-mentioned Service Agreement are KCPL's rates and charges in the compliance filing to FERC Order No. 888–A in Docket No. OA97-636–000.

Comment date: September 10, 1998, in accordance with Standard Paragraph E at the end of this notice.

2. Allegheny Power Service Corporation on Behalf of Monongahela Power Company, the Potomac Edison Company, and West Penn Power Company (Allegheny Power)

[Docket No. ER98–4304–000]

Take notice that on August 21, 1998, Allegheny Power Service Corporation on behalf of Monongahela Power Company, The Potomac Edison Company and West Penn Power Company (collectively Allegheny Power), filed Supplement No. 35, to add Duke Louis Dreyfus and Sonat Power Marketing L.P., to Allegheny Power's Open Access Transmission Service Tariff which has been submitted for filing with the Federal Energy Regulatory Commission.

The proposed effective date under the Service Agreements is August 20, 1998.

Comment date: September 10, 1998, in accordance with Standard Paragraph E at the end of this notice.

3. Northern States Power Company (Minnesota Company) and Northern States Power Company (Wisconsin Company)

[Docket No. ER98–4305–000]

Take notice that on August 21, 1998, Northern States Power Company

(Minnesota) and Northern States Power Company (Wisconsin) (collectively known as NSP), tendered for filing a Short-Term Market-Based Electric Service Agreement between NSP and Griffin (Customer).

NSP requests that this Short-Term Market-Based Electric Service Agreement be made effective on July 28, 1998.

Comment date: September 10, 1998, in accordance with Standard Paragraph E at the end of this notice.

4. Northern States Power Company (Minnesota Company) and Northern States Power Company (Wisconsin Company)

[Docket No. ER98–4306–000]

Take notice that on August 21, 1998, Northern States Power Company (Minnesota) and Northern States Power Company (Wisconsin) (collectively known as NSP), tendered for filing a Short-Term Market-Based Electric Service Agreement between NSP and Willmar Municipal Utilities Commission (Customer).

NSP requests that this Short-Term Market-Based Electric Service Agreement be made effective on July 28, 1998.

Comment date: September 10, 1998, in accordance with Standard Paragraph E at the end of this notice.

5. Allegheny Power Service Corporation on Behalf of Monongahela Power Co., the Potomac Edison Company and West Penn Power Company (Allegheny Power)

[Docket No. ER98–4307–000]

Take notice that on August 21, 1998, Allegheny Power Service Corporation on behalf of Monongahela Power Company, The Potomac Edison Company and West Penn Power Company (Allegheny Power) filed Supplement No. 1, to add four (4) new Customers to the Market Rate Tariff under which Allegheny Power offers generation services.

Allegheny Power requests a waiver of notice requirements to make service available as of August 20, 1998, to Enserch Energy Service, Inc., e' prime, Merchant Energy Group of the Americas, Inc., and The Cincinnati Gas & Electric Company and PSI Energy, Inc., (collectively, Cinergy Services).

Copies of the filing have been provided to the Public Utilities Commission of Ohio, the Pennsylvania Public Utility Commission, the Maryland Public Service Commission, the Virginia State Corporation Commission, the West Virginia Public Service Commission, and all parties of record.

Comment date: September 10, 1998, in accordance with Standard Paragraph E at the end of this notice.

6. FirstEnergy System

[Docket No. ER98–4308–000]

Take notice that on August 21, 1998, FirstEnergy System filed a Service Agreement to provide Firm Point-to-Point Transmission Service for PG&E Energy Trading—Power, L.P., (the Transmission Customer). Services are being provided under the FirstEnergy System Open Access Transmission Tariff submitted for filing by the Federal Energy Regulatory Commission in Docket No. ER97–412–000.

The proposed effective date under the Service Agreement is August 14, 1998, for the above mentioned Service Agreement in this filing.

Comment date: September 10, 1998, in accordance with Standard Paragraph E at the end of this notice.

7. American Electric Power Service Corporation

[Docket No. ER98–4309–000]

Take notice that on August 21, 1998, the American Electric Power Service Corporation (AEPSC), tendered for filing executed service agreements under the Power Sales Tariff of the AEP Operating Companies (Power Sales Tariff). The Power Sales Tariff was accepted for filing effective October 10, 1995 and has been designated AEP Operating Companies' FERC Electric Tariff First Revised Volume No. 2.

AEPSC respectfully requests waiver of notice to permit the service agreements to be made effective for service as specified in the submittal letter to the Commission with this filing.

A copy of the filing was served upon the Parties and the State Utility Regulatory Commissions of Indiana, Kentucky, Michigan, Ohio, Tennessee, Virginia and West Virginia.

Comment date: September 10, 1998, in accordance with Standard Paragraph E at the end of this notice.

8. Kansas City Power & Light Company

[Docket No. ER98–4310–000]

Take notice that on August 21, 1998, Kansas City Power & Light Company (KCPL), tendered for filing a Service Agreement dated June 1, 1998, between KCPL and NorAm Energy Services, Inc. KCPL proposes an effective date of August 6, 1998, and requests waiver of the Commission's notice requirement. This Agreement provides for Non-Firm Power Sales Service.

In its filing, KCPL states that the rates included in the above-mentioned Service Agreement are pursuant to KCPL's compliance filing in Docket No. ER94–1045.

Comment date: September 10, 1998, in accordance with Standard Paragraph E at the end of this notice.

9. The Dayton Power and Light Company

[Docket No. ER98–4311–000]

Take notice that on August 21, 1998, The Dayton Power and Light Company (Dayton), submitted service agreements establishing and West Penn Power d.b.a. Allegheny Energy, Western Resources, Inc., as customers under the terms of Dayton's Open Access Transmission Tariff.

Dayton requests an effective date of one day subsequent to this filing for the service agreements. Accordingly, Dayton requests waiver of the Commission's notice requirements.

Copies of the this filing were served and West Penn Power d.b.a. Allegheny Energy, Western Resources, Inc., and the Public Utilities Commission of Ohio.

Comment date: September 10, 1998, in accordance with Standard Paragraph E at the end of this notice.

10. The Dayton Power and Light Company

[Docket No. ER98–4312–000]

Take notice that on August 21, 1998, The Dayton Power and Light Company (DP&L), submitted service agreements establishing ConAgra Energy Services, Inc., and Electric Clearinghouse, Inc., as a customer under the terms of Dayton's Market-Based Sales Tariff.

DP&L requests an effective date of one day subsequent to this filing for the service agreements. Accordingly, Dayton requests waiver of the Commission's notice requirements.

Copies of this filing were served upon ConAgra Energy Services, Inc., Electric Clearinghouse, Inc., and the Public Utilities Commission of Ohio.

Comment date: September 10, 1998, in accordance with Standard Paragraph E at the end of this notice.

11. The Dayton Power and Light Company

[Docket No. ER98–4313–000]

Take notice that on August 21, 1998, The Dayton Power and Light Company (DP&L), tendered for filing service agreements establishing West Penn Power d.b.a. Allegheny Energy, and Western Resources, Inc., as customers under the terms of DP&L's Open Access Transmission Tariff.

DP&L requests an effective date of one day subsequent to this filing for the service agreements. Accordingly, Dayton requests waiver of the Commission's notice requirements.

Copies of this filing were served upon West Penn Power d.b.a. Allegheny Energy, Western Resources, Inc., and the Public Utilities Commission of Ohio.

Comment date: September 10, 1998, in accordance with Standard Paragraph E at the end of this notice.

12. UtiliCorp United Inc.

[Docket No. ER98–4314–000]

Take notice that on August 21, 1998, UtiliCorp United Inc. (UtiliCorp), filed service agreements with PG&E Energy Trading-Power, L.P., for service under its Short-Term Firm Point-to-Point open access service tariff for its operating divisions, Missouri Public Service, WestPlains Energy-Kansas and WestPlains Energy-Colorado.

In order to comply with the Commission's filing requirements an effective date of August 21, 1998, is requested.

Comment date: September 10, 1998, in accordance with Standard Paragraph E at the end of this notice.

13. UtiliCorp United Inc.

[Docket No. ER98–4315–000]

Take notice that on August 21, 1998, UtiliCorp United Inc. (UtiliCorp), filed a service agreement with New Energy Ventures, L.L.C., for service under its Non-Firm Point-to-Point open access service tariff for its operating division, WestPlains Energy-Colorado.

In order to comply with the Commission's filing requirements an effective date of August 21, 1998, is requested.

Comment date: September 10, 1998, in accordance with Standard Paragraph E at the end of this notice.

14. UtiliCorp United Inc.

[Docket No. ER98–4316–000]

Take notice that on August 21, 1998, UtiliCorp United Inc. (UtiliCorp), filed a service agreement with New Energy Ventures, L.L.C., for service under its Short-Term Firm Point-to-Point open access service tariff for its operating division, WestPlains Energy-Colorado.

In order to comply with the Commission's notice requirements an effective date of August 21, 1998, is requested.

Comment date: September 10, 1998, in accordance with Standard Paragraph E at the end of this notice.

15. Orange and Rockland Utilities, Inc.

[Docket No. ER98–4317–000]

Take notice that on August 21, 1998, Orange and Rockland Utilities, Inc. (Orange and Rockland), filed a Service Agreement between Orange and Rockland and MarketSpan Trading Services LLC on behalf of Long Island Lighting Company d/b/a LIPA (Customer). This Service Agreement specifies that the Customer has agreed to the rates, terms and conditions of Orange and Rockland Open Access Transmission Tariff filed on July 9, 1996 in Docket No. OA96–210–000.

Orange and Rockland requests waiver of the Commission's sixty-day notice requirements and an effective date of August 5, 1998, for the Service Agreement.

Orange and Rockland has served copies of the filing on The New York State Public Service Commission and on the Customer.

Comment date: September 10, 1998, in accordance with Standard Paragraph E at the end of this notice.

16. Orange and Rockland Utilities, Inc.

[Docket No. ER98–4318–000]

Take notice that on August 21, 1998, Orange and Rockland Utilities, Inc. (Orange and Rockland), filed a Service Agreement between Orange and Rockland and Merchant Energy Group of the Americas, Inc., (Customer). This Service Agreement specifies that the Customer has agreed to the rates, terms and conditions of Orange and Rockland Open Access Transmission Tariff filed on July 9, 1996 in Docket No. OA96–210–000.

Orange and Rockland requests waiver of the Commission's sixty-day notice requirements and an effective date of August 17, 1998, for the Service Agreement. Orange and Rockland has served copies of the filing on The New York State Public Service Commission and on the Customer.

Comment date: September 10, 1998, in accordance with Standard Paragraph E at the end of this notice.

17. Western Resources, Inc.

[Docket No. ER98–4319–000]

Take notice that on August 21, 1998, Western Resources, Inc., tendered for filing an agreement between Western Resources and FirstEnergy Trading and Power Marketing, Inc. Western Resources states that the purpose of the agreement is to permit the customer to take service under Western Resources' market-based power sales tariff on file with the Commission.

The agreement is proposed to become effective July 27, 1998.

Copies of the filing were served upon FirstEnergy Trading and Power Marketing, Inc., and the Kansas Corporation Commission.

Comment date: September 10, 1998, in accordance with Standard Paragraph E at the end of this notice.

18. PP&L, Inc.

[Docket No. ER98–4320–000]

Take notice that on August 21, 1998, PP&L, Inc. (formerly known as Pennsylvania Power & Light Company) (PP&L), filed a Service Agreement dated August 13, 1998 with NorAm Energy Services, Inc. (NorAm), under PP&L's Market-Based Rate and Resale of Transmission Rights Tariff, FERC Electric Tariff, Original Volume No. 5. The Service Agreement adds NorAm as an eligible customer under the Tariff.

PP&L requests an effective date of August 21, 1998, for the Service Agreement.

PP&L states that copies of this filing have been supplied to NorAm and to the Pennsylvania Public Utility Commission.

Comment date: September 10, 1998, in accordance with Standard Paragraph E at the end of this notice.

19. PP&L, Inc.

[Docket No. ER98–4321–000]

Take notice that on August 21, 1998, PP&L, Inc. (formerly known as Pennsylvania Power & Light Company) (PP&L), filed a Service Agreement dated August 18, 1998 with VT Public Power Supply Authority (VPPSA), under PP&L's Market-Based Rate and Resale of Transmission Rights Tariff, FERC Electric Tariff, Original Volume No. 5. The Service Agreement adds VPPSA as an eligible customer under the Tariff.

PP&L requests an effective date of August 21, 1998, for the Service Agreement.

PP&L states that copies of this filing have been supplied to VPPSA and to the Pennsylvania Public Utility Commission.

Comment date: September 10, 1998, in accordance with Standard Paragraph E at the end of this notice.

20. Commonwealth Edison Company

[Docket No. ER98–4322–000]

Take notice that on August 21, 1998, Commonwealth Edison Company (ComEd), tendered for filing service agreements establishing Kimball Power Co. L.L.C. (KPC), Northern/AES Energy, L.L.C. (NAES) and Statoil Energy Trading, Inc. (SETI), as customers under ComEd's FERC Electric Market Based-Rate Schedule for power sales.

ComEd requests an effective date of August 14, 1998, for the service agreements and, accordingly, seeks waiver of the Commission's notice requirements.

Copies of the filing were served on KPC, NAES, SETI and the Illinois Commerce Commission.

Comment date: September 10, 1998, in accordance with Standard Paragraph E at the end of this notice.

21. Tampa Electric Company

[Docket No. ER98–4323–000]

Take notice that on August 21, 1998, Tampa Electric Company (Tampa Electric), filed Notices of Termination of the rate schedules comprising its agreements to provide non-firm transmission service with the City of Lakeland (Lakeland) and Enron Power Marketing, Inc. (Enron), which have been superseded by service agreements under Tampa Electric's open access transmission tariff.

Tampa Electric proposes that the terminations of the rate schedules be made effective on the dates the superseding service agreements were made effective, and therefore requests waiver of the Commission's notice requirement.

Copies of the filing have been served on Lakeland, Enron, and the Florida Public Service Commission.

Comment date: September 10, 1998, in accordance with Standard Paragraph E at the end of this notice.

22. Rochester Gas and Electric Corporation

[Docket No. ER98–4324–000]

Take notice that on August 21, 1998, Rochester Gas and Electric Corporation (RG&E), tendered for filing with the Federal Energy Regulatory Commission (Commission) a Service Agreement between RG&E and Select Energy, Inc. (Transmission Customer) for service under RG&E's open access transmission tariff. Specifically dealing with the ''Pilot Retail Access Program'' under RG&E's open access transmission tariff.

RG&E requests waiver of the Commission's notice requirements for good cause shown and an effective date of August 11, 1998, for the Select Energy, Inc., Service Agreement.

A copy of this Service Agreement has been served on the Transmission Customer and the New York Public Service Commission.

Comment date: September 10, 1998, in accordance with Standard Paragraph E at the end of this notice.

23. Alliant Services, Inc.

[Docket No. ER98–4325–000]

Take notice that on August 21, 1998, Alliant Services, Inc., tendered for filing executed Service Agreements for firm and non-firm point-to-point transmission service, establishing *TransAlta Energy Marketing (U.S.) Inc.* as a point-to-point Transmission Customer under the terms of the Alliant Services, Inc., transmission tariff.

Alliant Services, Inc., requests an effective date of August 17, 1998, and accordingly, seeks waiver of the Commission's notice requirements.

A copy of this filing has been served upon the Illinois Commerce Commission, the Minnesota Public Utilities Commission, the Iowa Department of Commerce, and the Public Service Commission of Wisconsin.

Comment date: September 10, 1998, in accordance with Standard Paragraph E at the end of this notice.

24. East Texas Electric Coop., Inc.

[Docket No. ES98–45–000]

Take notice that on August 10, 1998 East Texas Electric Cooperative, Inc. (ETEC), filed an application pursuant to Section 204 of the Federal Power Act (16 U.S.C. 824c) seeking authorization to enter into a loan agreement with the National Rural Utilities Cooperative Finance Corporation under which ETEC would assume up to $30,000,000 in debt. ETEC is also seeking an exemption from the Commission's competitive bidding and negotiated placement issuance requirements set forth in 18 CFR 34.2 of the Commission's regulations.

Comment date: September 14, 1998, in accordance with Standard Paragraph E at the end of this notice.

Standard Paragraphs

E. Any person desiring to be heard or to protest said filing should file a motion to intervene or protest with the Federal Energy Regulatory Commission, 888 First Street, N.E., Washington, D.C. 20426, in accordance with Rules 211 and 214 of the Commission's Rules of Practice and Procedure (18 CFR 385.211 and 18 CFR 385.214). All such motions or protests should be filed on or before the comment date. Protests will be considered by the Commission in determining the appropriate action to be taken, but will not serve to make protestants parties to the proceeding. Any person wishing to become a party must file a motion to intervene. Copies of these filings are on file with the Commission and are available for public inspection.

Linwood A. Watson, Jr.,

Acting Secretary.

[FR Doc. 98–23713 Filed 9–2–98; 8:45 am]

BILLING CODE 6717–01–P

DEPARTMENT OF ENERGY

Federal Energy Regulatory Commission

[Docket No. ER98–1643–001, et al.]

Portland General Electric Company, et al.; Electric Rate and Corporate Regulation Filings

August 27, 1998.

Take notice that the following filings have been made with the Commission:

1. Portland General Electric Company

[Docket Nos. ER98–1643–001 and ER98–3671–000]

Take notice that on August 24, 1998, the Portland General Electric Company (PGE), filed with the Federal Energy Regulatory Commission, an amendment to its Notification of Changed Facts and an Amended Code Of Conduct Regarding The Relationship Between Portland General Electric Company and Enron Energy Services, Inc., Enron Power Marketing, Inc., Cook Inlet Energy Supply Limited Partnership, and Enron Wind Corporation. The amendments clarify PGE's provision of brokering services with its affiliates so as to ensure compliance with established FERC policy.

PGE renews its requests for an effective date of August 1, 1998, for its FERC Electric Tariff, Original Volume No. 11.

Comment date: September 14, 1998, in accordance with Standard Paragraph E at the end of this notice.

2. Tucson Electric Power Company

[Docket No. ER98–4326–000]

Take notice that on August 24, 1998, Tucson Electric Power Company (Tucson), tendered for filing a Notice of Cancellation of Rate Schedule FERC No. 108 (Wholesale Power Supply Agreement Between Tucson and Citizens Utilities Company).

Tucson desires to terminate the Agreement effective November 1, 1998.

A copy of transmittal letter and Notice of Cancellation have been mailed to all parties of the Agreement.

Comment date: September 14, 1998, in accordance with Standard Paragraph E at the end of this notice.

3. PECO Energy Company

[Docket No. ER98–4327–000]

Take notice that on August 24, 1998, PECO Energy Company (PECO), filed an executed Transmission Agency Agreement between PECT and Enserch Energy Services, Inc. (Hereinafter Supplier). The terms and conditions contained within this Agreement are

identical to the terms and conditions contained with the Form of Transmission Agency Agreement submitted to the Commission on October 3, 1997 as part of the joint filing by the Pennsylvania Public Utility Commission and the Pennsylvania PJM Utilities at Docket No. ER98–64–000. This filing merely submits an individual executed copy of the Transmission Agreement between PECO and an alternative supplier participating in PECO's Retail Pilot Program.

PECO requests an effective date of September 1, 1998, for the Transmission Agency Agreement between PECO and Supplier.

Copies of the filing were served on the Supplier and the Pennsylvania Public Utility Commission.

Comment date: Sepember 14, 1998, in accordance with Standard Paragraph E at the end of this notice.

4. Southwestern Public Service Co.

[Docket No. ER98–4328–000]

Take notice that on August 24, 1998, New Century Services, Inc., on behalf of Southwestern Public Service Company (Southwestern), submitted an executed umbrella service agreement under Southwestern's market-based sales tariff with Noresco. This umbrella service agreement provides for Southwestern's sale and Noresco's purchase of capacity and energy at market-based rates pursuant to Southwestern's market-based sales tariff.

Southwestern requests an effective date of August 7, 1998.

A copy of this filing is being served on Noresco.

Comment date: September 14, 1998, in accordance with Standard Paragraph E at the end of this notice.

5. PECO Energy Company

[Docket No. ER98–4329–000]

Take notice that on August 24, 1998, PECO Energy Company (PECO), filed an executed Installed Capacity Obligation Allocation Agreement between PECO and Enserch Energy Services, Inc., (hereinafter Supplier). The terms and conditions contained within this Agreement are identical to the terms and conditions contained with the Form of Installed Capacity Allocation Agreement, filed by PECO with the Commission on October 3, 1997, at Docket No. ER98–28–000. This filing merely submits an individual executed copy of the Installed Capacity Obligation Allocation Agreement between PECO and an alternate suppliers participating in PECO's Pilot.

PECO requests an effective date of September 1, 1998.

Copies of the filing were served on the Supplier and the Pennsylvania Public Utility Commission.

Comment date: September 14, 1998, in accordance with Standard Paragraph E at the end of this notice.

6. New Century Services, Inc.

[Docket No. ER98–4330–000]

Take notice that on August 24, 1998, New Century Services, Inc., on behalf of Cheyenne Light, Fuel and Power Company, Public Service Company of Colorado, and Southwestern Public Service Company (collectively Companies), tendered for filing an executed Umbrella Service Agreement, under their Joint Open Access Transmission Service Tariff for Non-Firm Point-to-Point Transmission Service between the Companies and El Paso Energy Marketing Company.

The Companies request that the Agreement be made effective on August 12, 1998.

Comment date: September 14, 1998, in accordance with Standard Paragraph E at the end of this notice.

7. Southern Company Services, Inc.

[Docket No. ER98–4331–000]

Take notice that on August 24, 1998, Southern Company Services, Inc. (SCS), acting on behalf of Alabama Power Company (APC), Georgia Power Company, Gulf Power Company, Mississippi Power Company, and Savannah Electric and Power Company (collectively referred to as Southern Company), filed two (2) executed service agreements for firm point-to-point transmission service between SCS, as agent for southern Company, and (i) Aquila Power Corp. And (ii) PG&E Energy Trading and a Notice of Cancellation of a service agreement for non-firm point-to-point transmission service executed by SCS, as agent for Southern Company, and Federal Energy Sales, Inc. under the Open Access Transmission Tariff of Southern Company (FERC Electric Tariff, Original Volume No. 5).

Comment date: September 14, 1998, in accordance with Standard Paragraph E at the end of this notice.

8. Boston Edison Company

[Docket No. ER98–4332–000]

Take notice that on August 24, 1998, Boston Edison Company (Edison), tendered for filing a Transmission Facilities Support Agreement between Boston Edison Company and Millennium Power Partners, L.P. dated July 25, 1998.

Boston Edison requests that this agreement become effective 60 days following the date of this filing.

Edison states that it has served this filing on the Massachusetts Department of Telecommunications and Energy.

Comment date: September 14, 1998, in accordance with Standard Paragraph E at the end of this notice.

9. Primary Power Marketing, L.L.C.

[Docket No. ER98–4333–000]

Take notice that on August 24, 1998, Primary Power Marketing, L.L.C. (Primary), petitioned the Commission for acceptance of Primary's Rate Schedule FERC Tariff No. 1; the granting of certain blanket approvals, including the authority to sell electricity at market based rates; and waiver of certain Commission regulations.

Comment date: September 14, 1998, in accordance with Standard Paragraph E at the end of this notice.

10. Golden Valley Power Company

[Docket No. ER98–4334–000]

Take notice that on August 24, 1998, Golden Valley Power Company (Golden), petitioned the Commission for acceptance of Golden Rate Schedule FERC No. 1; the granting of certain blanket approvals, including the authority to sell electricity at market-based rates; and the waiver of certain Commission regulations.

Golden intends to engage in wholesale electric power and energy purchases and sales as a marketer. Golden is not in the business of generating or transmitting electric power. Golden Valley Power Company is a Minnesota corporation.

Comment date: September 14, 1998, in accordance with Standard Paragraph E at the end of this notice.

11. Commonwealth Edison Company

[Docket No. ER98–4335–000]

Take notice that on August 24, 1998, Commonwealth Edison Company and Commonwealth Edison Company of Indiana (collectively, ComEd), submitted an executed Dynamic Scheduling Agreement with the Wholesale Marketing Department of Commonwealth Edison Company (WMD), under ComEd's Open Access Transmission Tariff. The Agreement provides for dynamic scheduling of firm-to-point transmission service.

ComEd requests an effective date of March 1, 1998, and, accordingly, seeks waiver of the Commission's requirements. Copies of this filing were served upon WMD and the Illinois Commerce Commission.

Comment date: September 14, 1998, in accordance with Standard Paragraph E at the end of this notice.

12. Spokane Energy, LLC

[Docket No. ER98–4336–000]

Take notice that on August 24, 1998, Spokane Energy, LLC (Spokane Energy), petitioned the Commission for acceptance of its FERC Rate Schedule No. 1, and an order authorizing Spokane Energy to sell energy at market-based rates, and for certain blanket approvals, and the waiver of certain Commission regulations.

Spokane Energy intends to engage in wholesale electric power and energy purchases and sales as a marketer. Spokane energy is a Washington limited liability company formed by The Washington Water Power Company. Spokane Energy is not in the business of generating, transmitting, or distributing electric power.

Comment date: September 14, 1998, in accordance with Standard Paragraph E at the end of this notice.

13. Nevada Power Company

[Docket No. ER98–4337–000]

Take notice that on August 24, 1998, Nevada Power Company (NPC), tendered for filing the proposed marketplace-McCullough Interconnection Agreement (Agreement). The parties to this Agreement are: Arizona Public Service Company (APS); the United States of America (US); Salt River Project Agricultural Improvement and Power District (S.P.); Department of Water and Power of the City of Los Angeles (LADWP); NPC; M–S–R Public Power Agency (M–S–R); Southern California Public Power Authority (SCPPA); Tucson Electric Power Company (TEP); and the City of Vernon, California (Vernon).

The Agreement sets forth all the terms and conditions for the interconnection of the Marketplace Substation with the McCullough 500 kV Switchyard including required facilities, transaction rights at the McCullough 500 kV Switchyard, cost responsibilities, a one-time payment and other applicable charges for recovery of costs.

NPC requests an effective date no later than sixty (60) days after the date the Agreement is filed.

In addition to all the Parties to this Agreement, copies of this filing have also been served on the Arizona Corporation Commission and the Public Utilities Commission of Nevada.

Comment date: September 14, 1998, in accordance with Standard Paragraph E at the end of this notice.

14. Consolidated Edison Company Of New York, Inc.

[Docket No. ER98–4338–000]

Take notice that on August 24, 1998, Consolidated Edison Company of New York, Inc. (Con Edison), tendered for filing a Supplement to its Rate Schedule FERC 117, an agreement to provide transmission and interconnection service to Long Island Lighting Company (LILCO). The Supplement provides for a decrease in the annual fixed rate carrying charges.

Con Edison has requested that this decrease take effect as of September 1, 1998.

Con Edison states that a copy of this filing has been served by mail upon LILCO.

Comment date: September 14, 1998, in accordance with Standard Paragraph E at the end of this notice.

15. American Electric Power Service

[Docket No. ER98–4339–000]

Take notice that on August 24, 1998, the American Electric Power Service Corporation (AEPSC), tendered for filing a service agreement with Texas utilities Electric Company under the Wholesale Market Tariff of the AEP Operating Companies (Power Sales Tariff). The Power Sales Tariff was accepted for filing effective October 10, 1997 and has been designated AEP Operating Companies, FERC Electric Tariff Original Volume No. 5. Also submitted for filing is a request by Energis Resources, which has previously executed a service agreement under AEPSC's Power Sales Tariff, to change their name to PSEG Energy Technologies. AEPSC respectfully requests waiver of notice to permit the service agreement and notice of assignment to be made effective for service on or after July 21, 1998.

A copy of the filing was served upon the Parties and the State Utility Regulatory Commission of Indiana, Kentucky, Michigan, Ohio, Tennessee, Virginia and West Virginia.

Comment date: September 14, 1998, in accordance with Standard Paragraph E at the end of this notice.

16. Arizona Public Service Company

[Docket No. ER98–4340–000]

Take notice that on August 24, 1998, Arizona Public Service Company (APS), tendered for filing Umbrella Service Agreements to provide Firm and Non-Firm Point-to-Point Transmission Service to Bonneville Power Administration (BPA), under APS' Open Access Transmission Tariff.

A copy of this filing has been served on BPA and the Arizona Corporation Commission.

Comment date: September 14, 1998, in accordance with Standard Paragraph E at the end of this notice.

17. Gulf Power Company

[Docket No. ER98–4341–000]

Take notice that on August 24, 1998, Gulf Power Company tendered for filing revised supplements to Service Schedule T of the Interconnection Agreement between Gulf Power Company (Gulf) and Alabama Electric Cooperative, Inc. (AEC), agent for West Florida Cooperative Association, Inc. (West Florida). The purpose of this filing is to reflect a change in delivery point voltage level service for West Florida's Bonifay substation.

A copy of this filing has been sent to AEC, agent for West Florida.

Comment date: September 14, 1998, in accordance with Standard Paragraph E at the end of this notice.

18. Texas-New Mexico Power Company

[Docket No. ES98–46–000]

Take notice that on August 24, 1998, Texas-New Mexico Power Company (TNMP) submitted an application under Section 204 of the Federal Power Act for authorization to issue (1) corporate bonds under a new indenture in an amount up $200 million and accompanying first mortgage bonds as collateral security; and (2) to enter into a three to five year revolving credit agreement to borrow from a syndicate of commercial banks up to an amount of $200 million.

Comment date: September 24, 1998, in accordance with Standard Paragraph E at the end of this notice.

Standard Paragraphs

E. Any person desiring to be heard or to protest said filing should file a motion to intervene or protest with the Federal Energy Regulatory Commission, 888 First Street, NE, Washington, DC 20426, in accordance with Rules 211 and 214 of the Commission's Rules of Practice and Procedure (18 CFR 385.211 and 18 CFR 385.214). All such motions or protests should be filed on or before the comment date. Protests will be considered by the Commission in determining the appropriate action to be taken, but will not serve to make protestants parties to the proceeding. Any person wishing to become a party must file a motion to intervene. Copies of these filings are on file with the

Commission and are available for public inspection.

Linwood A. Watson, Jr.,

Acting Secretary.

[FR Doc. 98–23712 Filed 9–2–98; 8:45 am]

BILLING CODE 6717–01–P

DEPARTMENT OF ENERGY

Federal Energy Regulatory Commission

[Docket No. ER98–4343–000, et al.]

Southern Indiana Gas and Electric Company, et al.; Electric Rate and Corporate Regulation Filings

August 28, 1998.

Take notice that the following filings have been made with the Commission:

1. Southern Indiana Gas and Electric Company

[Docket No. ER98–4343–000]

Take notice that on August 25, 1998, Southern Indiana Gas and Electric Company (SIGECO), tendered for filing one (1) executed service agreement for firm transmission service under Part II of its Transmission Services Tariff with Statoil Energy Trading, Inc. and one (1) executed service agreement for non-firm transmission service under Part II of its Transmission Services Tariff with Statoil Energy Trading, Inc.

Copies of the filing were served upon each of the parties to each service agreement.

Comment date: September 14, 1998, in accordance with Standard Paragraph E at the end of this notice.

2. Florida Power & Light Company

[Docket No. ER98–4344–000]

Take notice that on August 25, 1998, Florida Power & Light Company (FPL), tendered for filing executed service agreements with PG & E Energy Trading—Power, L.P. for Firm and Non-Firm transmission service under FPL's Open Access Transmission Tariff.

FPL requests that the proposed service agreements be permitted to become effective on September 1, 1998.

FPL states that this filing is in accordance with Section 35 of the Commission's regulations.

Comment date: September 14, 1998, in accordance with Standard Paragraph E at the end of this notice.

3. Florida Power & Light Company

[Docket No. ER98–4345–000]

Take notice that on August 25, 1998, Florida Power & Light Company (FPL), tendered for filing executed service agreements with American Electric Power Service Corporation for Firm and Non-Firm transmission service under FPL's Open Access Transmission Tariff.

FPL requests that the proposed service agreements be permitted to become effective on September 1, 1998.

FPL states that this filing is in accordance with Section 35 of the Commission's regulations.

Comment date: September 14, 1998, in accordance with Standard Paragraph E at the end of this notice.

4. Virginia Electric and Power Co.

[Docket No. ER98–4346–000]

Take notice that on August 25, 1998, Virginia Electric and Power Company (Virginia Power), tendered for filing an executed Service Agreement for Non-Firm Point-to-Point Transmission Service with Statoil Energy Trading, Inc., under the Open Access Transmission Tariff to Eligible Purchasers dated July 14, 1997. Under the tendered Service Agreement, Virginia Power will provide non-firm point-to-point service to the Transmission Customers under the rates, terms and conditions of the Open Access Transmission Tariff.

An effective date of August 25, 1998 is requested.

Copies of the filing were served upon Statoil Energy Trading, Inc., the Virginia State Corporation Commission and the North Carolina Utilities Commission.

Comment date: September 14, 1998, in accordance with Standard Paragraph E at the end of this notice.

5. Virginia Electric and Power Co.

[Docket No. ER98–4347–0000]

Take notice that on August 25, 1998, Virginia Electric and Power Company (Virginia Power), tendered for filing an executed Service Agreement for Firm Point-to-Point Transmission Service with Statoil Energy Trading, Inc. under the Open Access Transmission Tariff to Eligible Purchasers dated July 14, 1997. Under the tendered Service Agreement, Virginia Power will provide firm point-to-point service to the Transmission Customers under the rates, terms and conditions of the Open Access Transmission Tariff.

An effective date of August 25, 1998 is requested.

Copies of the filing were served upon Statoil Energy Trading, Inc., the Virginia State Corporation Commission and the North Carolina Utilities Commission.

Comment date: September 14, 1998, in accordance with Standard Paragraph E at the end of this notice.

6. Cook Inlet Energy Supply, L.P.

[Docket No. ER98–4348–000]

Take notice that on August 25, 1998, Cook Inlet Energy Supply, L.P. (Cook Inlet), filed a notice of termination pursuant to a request for waiver of the 60-day advance-notice requirement, to be effective June 26, 1998, relating to Cook Inlet's termination of power sales confirmations with The Power Company of America, L.P., conducted pursuant to the Western Systems Power Pool Agreement.

Comment date: September 14, 1998, in accordance with Standard Paragraph E at the end of this notice.

7. Entergy Services, Inc.

[Docket No. ER98–4349–000]

Take notice that on August 25, 1998, Entergy Services, Inc. (Entergy Services), on behalf of Entergy Arkansas, Inc., Entergy Gulf States, Inc., Entergy Louisiana, Inc., Entergy Mississippi, Inc., and Entergy New Orleans, Inc. (collectively, the Entergy Operating Companies), tendered for filing an executed Non-Firm Point-to-Point Transmission Service Agreement and an executed Short-Term Firm Point-to-Point Transportation Agreement both between Entergy Services, Inc. as agent for the Entergy Operating Companies, and Duke Power, a division of Duke Energy Corporation.

Comment date: September 14, 1998, in accordance with Standard Paragraph E at the end of this notice.

8. Entergy Services, Inc.

[Docket No. ER98–4350–000]

Take notice that on August 25, 1998, Entergy Services, Inc. (Entergy Services), on behalf of Entergy Arkansas, Inc., Entergy Gulf States, Inc., Entergy Louisiana, Inc., Entergy Mississippi, Inc., and Entergy New Orleans, Inc. (collectively, the Entergy Operating Companies), tendered for filing an executed Short-Term Market Rate Sales Agreement between Entergy Services, as agent for the Entergy Operating Companies, and OGE Energy Resources, Inc. for the sale of power under Entergy Services' Rate Schedule SP.

Comment date: September 14, 1998, in accordance with Standard Paragraph E at the end of this notice.

E. Any person desiring to be heard or to protest said filing should file a motion to intervene or protest with the Federal Energy Regulatory Commission, 888 First Street, NE, Washington, DC 20426, in accordance with Rules 211 and 214 of the Commission's Rules of Practice and Procedure (18 CFR 385.211 and 18 CFR 385.214). All such motions

or protests should be filed on or before the comment date. Protests will be considered by the Commission in determining the appropriate action to be taken, but will not serve to make protestants parties to the proceeding. Any person wishing to become a party must file a motion to intervene. Copies of these filings are on file with the Commission and are available for public inspection.

Linwood A. Watson, Jr.,

Acting Secretary.

[FR Doc. 98–23756 Filed 9–2–98; 8:45 am]

BILLING CODE 6717–01–P

ENVIRONMENTAL PROTECTION AGENCY

[FRL–6155–1]

Agency Information Collection Activities: Proposed Collection; Comment Request; Verification of Test Parameters and Parts Lists for Light-Duty Vehicles and Light-Duty Trucks

AGENCY: Environmental Protection Agency (EPA).

ACTION: Notice.

SUMMARY: In compliance with the Paperwork Reduction Act (44 U.S.C. 3501 *et seq.*), this notice announces that EPA is planning to submit the following proposed and/or continuing Information Collection Request (ICR) for renewal to the Office of Management and Budget (OMB) for review and approval: Verification of Test Parameters and Parts Lists for Light-Duty Vehicles and Light-Duty Trucks, OMB Control Number 2060–0094, expiring 08/31/98. Before submitting the ICR to OMB for review and approval, EPA is soliciting comments on specific aspects of the proposed information collection as described below.

DATES: Comments must be submitted on or before October 5, 1998.

ADDRESSES: Vehicle Programs & Compliance Division (6405J), 401 M Street, SW, Washington, D.C. 20460. Interested persons may request a copy of this ICR, without charge, by writing, faxing, or phoning the contact person below.

FOR FURTHER INFORMATION OR A COPY: Chestine Payton Office of Mobile Sources, Vehicle Programs & Compliance Division, (202) 564–9467, (202) 565–2057 (fax), E-mail address: payton.chestine@epamail.epa.gov.

SUPPLEMENTARY INFORMATION: Affected Entities: Entities potentially affected by this action are manufacturers of light-duty vehicles and light-duty trucks.

Title: Verification of Test Parameters and Parts Lists for Light-Duty Vehicles and Light-Duty Trucks, OMB Control Number 2060–0094, expiration date 08/31/98. This is a request for an extension of a currently approved collection.

Abstract: The EPA tests in-use vehicles in order to enforce compliance with light-duty vehicle and light-duty truck emission standards. The Federal Test Procedure (FTP), which is used for determining compliance, requires test parameters and procedures that are necessary to conduct a valid test. Therefore, after EPA has selected these parameters and procedures from previously submitted manufacturer data, EPA gives the motor vehicle manufacturer the opportunity to review and verify that EPA has selected the correct parameters and procedures for vehicle emission testing. Providing part numbers gives the manufacturer the opportunity to help ensure that defective or incorrect parts will be replaced by those which the manufacturer feels are necessary to correctly evaluate the emissions performance of the vehicles tested. Though this information request is voluntary, EPA uses the manufacturers' input as part of the verification of EPA's work. If this information is not reviewed and provided by the manufacturers, EPA and the manufacturers may waste resources on tests that were performed improperly and the manufacturers may not have as much opportunity to participate in a compliance program that has the potential to adversely affect them.

An agency may not conduct or sponsor, and a person is not required to respond to, a collection of information unless it displays a currently valid OMB control number. The OMB control numbers for EPA's regulations are listed in 40 CFR Part 9 and 48 CFR Chapter 15. The **Federal Register** Notice required under 5 CFR 1320.8(d), soliciting comments on this collection of information was published on May 8, 1998 (FR Vol. 63, No. 89); no comments were received.

Burden Statement: The annual burden for this collection of information is estimated to average 2 hours per response. Burden means the total time, effort, or financial resources expended by persons to generate, maintain, retain, or disclose or provide information to or for a Federal agency. This includes the time needed to review instructions; develop, acquire, install, and utilize technology and systems for the purposes of collecting, validating, and verifying information, processing and maintaining information, and disclosing and providing information; adjust the existing ways to comply with any previously applicable instructions and requirements; train personnel to be able to respond to a collection of information; search data sources; complete and review the collection of information; and transmit or otherwise disclose the information.

Respondents/Affected Entities: Manufacturers of light-duty vehicles and light-duty trucks.

Estimated Number of Respondents: 15.

Frequency of Response: Occasionally.

Estimated Total Annual Hour Burden: 150 hours.

Estimated Total Annualized Cost Burden: $4,950.

Send comments on the Agency's need for this information, the accuracy of the provided burden estimates, and any suggested methods for minimizing respondent burden, including through the use of automated collection techniques to the following address. Please refer to EPA ICR No. 0167.05 and OMB Control No. 2060–0094 in any correspondence.

Ms. Sandy Farmer, U.S. Environmental Protection Agency, OPPE Regulatory Information Division (2136), 401 M Street, SW, Washington, DC 20460
and
Office of Information, Office of Management and Budget, Attention: Desk Officer for EPA 725 17th Street, NW, Washington, DC 20503

Dated: August 27, 1998.

Robert Perciasepe,

Assistant Administrator for Air and Radiation.

[FR Doc. 98–23687 Filed 9–2–98; 8:45 am]

BILLING CODE 6560–50–U

ENVIRONMENTAL PROTECTION AGENCY

[FRL–6156–4]

Regulatory Reinvention (XL) Pilot Projects

AGENCY: Environmental Protection Agency (EPA).

ACTION: Notice of availability of Lucent Project XL Final Project Agreement and related documents.

SUMMARY: EPA is announcing the signing of the Project XL Final Project Agreement (FPA) for Lucent Technologies, Inc.'s Microelectronics unit.

DATES: The FPA was signed on 19 August 1998.

ADDRESSES: To obtain a copy of the Final Project Agreement, Fact Sheet, or public comments received, contact: Rich

Kampf, U.S. EPA, Region III, 1650 Arch Street Philadelphia, Pa. 19103, or L. Nancy Birnbaum, U.S. EPA, 401 M Street, SW, Room 1025WT (1802), Washington, DC 20460. The documents are also available via the Internet at the following location: ''http://www.epa.gov/ProjectXL''. In addition, public files on the Project are located at EPA Region III in Philadelphia. Questions to EPA regarding the documents can be directed to Rich Kampf at (215) 814–2105 or L. Nancy Birnbaum at (202) 260–2601. To be included on the Lucent Project XL mailing list to receive information about future public meetings, XL progress reports and other mailings from Lucent on the XL Project, contact: Debra Hennelly, Lucent Technologies, Inc., 219 Mount Airy Road, Room 2F236, P.O. Box 612, Basking Ridge, NJ 07920–0612. Ms. Hennelly can also be reached by telephone at (908) 953–4960. For information on all other aspects of the XL Program contact Christopher Knopes at the following address: Office of Reinvention, United States Environmental Protection Agency, Room 1029, 401 M Street, SW (1802), Washington, DC 20460. Additional information on Project XL, including documents referenced in this notice, other EPA policy documents related to Project XL, regional XL contacts, application information, and descriptions of existing XL projects and proposals, is available via the Internet at ''http://www.epa.gov/ProjectXL'' and via an automated fax-on-demand menu at (202) 260–8590.

SUPPLEMENTARY INFORMATION: The FPA is a voluntary agreement developed collaboratively by Lucent, stakeholders, the Commonwealth of Pennsylvania, and EPA. Project XL, announced in the **Federal Register** on May 23, 1995 (60 FR 27282), gives regulated sources the flexibility to develop alternative strategies that will replace or modify specific regulatory requirements on the condition that they produce greater environmental benefits. EPA has set a goal of implementing a total of fifty projects undertaken in full partnership with the states.

On June 29, 1998, EPA announced the availability of the draft umbrella FPA in the **Federal Register** (63 FR 35212) and requested comments. As a result of that announcement, EPA received six positive comments: one each from the Allentown and Reading LEAGs, two from individual members of the Allentown LEAG, one from an individual member of both Allentown and Breinigsville LEAG who is also an environmental health and safety manager for a nearby R&D/corporate headquarters, and one from the Environmental Law Institute. No other comments were received.

The FPA is based on an existing third-party certified environmental management system (EMS) for Lucent's entire global microelectronics business unit, in fulfillment of the ISO 14001 standard for EMSs. The FPA allows Lucent to use the existing EMS as a framework for developing specific proposals involving regulatory flexibility such as simplifying permitting, record keeping, and reporting requirements, while driving continual improvement and pollution prevention programs. The FPA provides a ''test bed'' to determine the broad applicability of ISO 14001 as a vehicle for determining and managing regulatory flexibility while achieving superior environmental performance.

Lucent's project is a multi-regional attempt to incorporate environmental management practices across the entire business unit. The parties anticipate that the EMS will foster superior environmental performance by identifying opportunities to reduce Lucent's environmental impact. EPA Regions 3 and 4 are intended sites for facility-specific projects. Each facility-specific addendum to the umbrella FPA will also demonstrate superior environmental performance. The regulatory flexibility necessary to implement specific projects will be discussed in each facility-specific addendum.

As part of its EMS, Lucent has established facility-specific Local Environmental Advisory Groups (LEAGs) for all of its facilities globally. Each LEAG is composed of local stakeholders including environmental organizations, community groups, employees, and other interested citizens. The LEAGs provide input on the XL project and the EMS. The LEAGs unanimously approved the draft umbrella FPA.

Dated: August 20, 1998.

Lisa Lund,

Deputy Associate Administrator for Reinvention Programs, Office of Reinvention.

[FR Doc. 98–23815 Filed 9–2–98; 8:45 am]

BILLING CODE 6560–50–U

ENVIRONMENTAL PROTECTION AGENCY

[FRL–6154–8]

Agency Information Collection Activities; OMB Responses

AGENCY: Environmental Protection Agency (EPA).

ACTION: Notices.

SUMMARY: This notice announces the Office of Management and Budget's (OMB) responses to Agency clearance requests, in compliance with the Paperwork Reduction Act (44 U.S.C. 3501 et seq.). An agency may not conduct or sponsor, and a person is not required to respond to, a collection of information unless it displays a currently valid OMB control number. The OMB control numbers for EPA's regulations are listed in 40 CFR Part 9 and 48 CFR Chapter 15.

FOR FURTHER INFORMATION CONTACT: Call Sandy Farmer at (202) 260–2740, or E-mail at ''farmer.sandy@epamail.epa.gov'', and please refer to the appropriate EPA Information Collection Request (ICR) Number.

SUPPLEMENTARY INFORMATION:

OMB Responses to Agency Clearance Requests

OMB Approvals

EPA ICR No. 1735.02; Reporting and Record Keeping Requirements under EPA's AgSTAR Program; non-regulatory; was approved 08/11/98; OMB No. 2060–0329; expires 08/31/2001.

EPA ICR No. 1830.01; Collection of 1997 Iron and Steel Industry Data; was approved 08/03/98; OMB No. 2040–0193; expires 08/31/2001.

OMB Disapprovals

EPA ICR No. 1352.05; Community Right-to-Know Reporting Requirements under Section 311 and 312 of EPCRA; in 40 CFR Part 355.30, 40 CFR Part 355.40 and 40 CFR 370, Subpart B–D; was disapproved by OMB 08/11/98.

EPA ICR No. 1656.04; Requirements for Risk Management Plans under Section 112(r) of the Clean Air Act; in 40 CFR Part 68; was disapproved by OMB 08/10/98.

EPA ICR No. 1844.01; Record Keeping and Reporting Requirements for NESHAP for Petroleum Refineries—Catalytic Cracking Units, Catalytic Reforming Units, and Sulfur Plant Units; was disapproved by OMB 07/27/98.

Extensions of Expiration Dates

EPA ICR No. 1679.02; Federal Standards of Marine Tank Vessel Loading and Unloading Operations and National Emission Standards for Hazardous Air Pollutants for Marine Tank Vessel Loading and Unloading Operation; in 40 CFR Part 63, Subpart Y; OMB No. 2060–0289; on 08/06/98 OMB extended the expiration date through 10/31/98.

EPA ICR No. 1284.04; NSPS for the Polymeric Coating of Supporting Substrates Facilities; in 40 CFR Part 60, Subpart VVV; OMB No. 2060–0181; on 08/10/98 OMB extended the expiration date through 02/28/99.

Dated: August 27, 1998.

Joseph Retzer,

Director, Regulatory Information Division.

[FR Doc. 98–23686 Filed 9–2–98; 8:45 am]

BILLING CODE 6560–50–M

ENVIRONMENTAL PROTECTION AGENCY

[OW–FRL–6155–2]

Notice of availability of the Water Quality Criteria and Standards Plan—Priorities for the Future

AGENCY: Environmental Protection Agency (EPA).

ACTION: Notice of availability of, and request for comment on, the Water Quality Criteria and Standards Plan—Priorities for the Future.

SUMMARY: The Environmental Protection Agency (EPA) announces the availability of a plan, entitled the Water Quality Criteria and Standards Plan—Priorities for the Future. The Plan presents a vision and strategy to enhance and improve water quality criteria and standards programs across the country. The Plan describes seven new criteria and standards program initiatives that EPA, in partnership with the States and Tribes, will undertake or complete over the next ten years. The Plan briefly describes the water quality issues and concerns that the new criteria initiatives will address. For each initiative, the Plan explains the key objective(s) to be accomplished and the critical activities EPA is planning to undertake to achieve these objectives.

DATES: If you have comments on the Plan please provide them to the address listed below postmarked on or before October 16, 1998. EPA will consider your comments while preparing the final Plan this fall.

ADDRESSES: Comments should be sent to: Water Quality Criteria and Standards Plan; Attn: Plan Comments; Health and Ecological Criteria Division (4304); Office of Science and Technology; Office of Water; U.S. Environmental Protection Agency; 401 M Street SW; Washington, DC 20460.

This notice contains a brief summary of the Water Quality Criteria and Standards Plan. Copies of the complete Plan, or a fact sheet summarizing the Plan may be obtained from the U.S. Environmental Protection Agency, National Center for Environmental Publication and Information, 11029 Kenwood Road, Bldg. 5, Cincinnati, Ohio 45242; fax 1–513–489–8695 or 1–800–490–9198. Copies may also be ordered from the Office of Water Resource Center by calling (202) 260–7786. The fact sheet and the Plan are also available on the Internet at http://www.epa.gov/ost/standards/quality.html.

FOR FURTHER INFORMATION CONTACT: William F. Swietlik; Health and Ecological Criteria Division (4304); Office of Science and Technology; Office of Water; U.S. Environmental Protection Agency; 401 M Street SW, Washington, DC 20460; (202) 260–9569; Fax (202) 260–1036; email: swietlik.william@epamail.epa.gov.

SUPPLEMENTARY INFORMATION: The Plan supports the Clean Water Action Plan announced by President Clinton in February 1998. Many of the action items to be accomplished under the Action Plan rely on a strong water quality standards program. Strong water quality standards provide a foundation for the Total Maximum Daily Load (TMDL) program, National Pollutant Discharge Elimination System (NPDES) permitting, nonpoint source control, wetlands protection, and other water resources management efforts.

A key action item in the Clean Water Action Plan is the reduction of nutrient over-enrichment. The Water Quality Criteria and Standards Plan highlights the criteria and standards activities that need to be accomplished to achieve this goal. The National Nutrient Strategy, recently released by EPA, explains in detail the approach to development of nutrient criteria and standards.

The Water Quality Criteria and Standards Plan also complements the Advance Notice of Proposed Rule Making (ANPRM) for the Water Quality Standards Regulations at 40 CFR Part 131, published in the **Federal Register** on July 7, 1998. The Plan describes the new criteria initiatives that EPA will undertake, and the ANPRM discusses and solicits public comment on how these scientific and technical improvements, along with other standards changes, should best be implemented in water quality standards programs by the States and Tribes.

The Water Quality Criteria and Standards Plan describes water quality criteria and standards initiatives in the following seven areas:

1. Maintaining and strengthening the existing *Ambient Water Quality Criteria* for surface waters.
2. Developing *Nutrient Criteria* and assessment methods to better protect aquatic life and human health.
3. Developing criteria for *Microbial Pathogens* to better protect human health during water recreation.
4. Completing the development of *Biocriteria* as an improved basis for aquatic life protection.
5. Developing improved *TMDLs and Modeling* to better translate water quality standards into implementable control strategies.
6. Evaluating possible new initiatives for *Sedimentation, Flow, and Wildlife.*
7. Ensuring *Implementation* of these new initiatives and improvements by EPA in partnership with the States and Tribes.

The national surface water quality protection program is at an important juncture. The initiatives described in the Plan are needed to better protect aquatic life and the recreational uses of the Nation's waters. Over the past two decades, State and Tribal water quality standards and water quality-based management approaches have relied upon aquatic life use designations and protective criteria based primarily upon narrative, chemical-specific, and whole effluent toxicity methodologies. Using these approaches, outstanding progress has been made. However, not all of the Nation's waters have achieved the Clean Water Act goal of ''fishable and swimmable'', and significant water pollution problems still exist. Approximately 40 percent of the Nation's assessed waters still do not meet water quality goals and about half of the Nation's 2000 major watersheds have water quality problems.

Given these facts, there is a critical need for improved water quality standards and a set of tools to implement those standards. Adding nutrient criteria and biological criteria to the water quality criteria and standards program ensures further improvements in maintaining and restoring aquatic life. Improved human health criteria will better protect against bioaccumulative pollutants and new microbial pathogen controls will better protect human health (especially that of children) during water related recreation. Better tools also are needed for controlling excessive sedimentation,

flow alterations and for protecting wildlife. The new initiatives discussed in the Plan also will help to promote water resources management on a watershed basis.

Dated: August 24, 1998.

J. Charles Fox,

Acting Assistant Administrator, Office of Water.

[FR Doc. 98–23688 Filed 9–2–98; 8:45 am]

BILLING CODE 6560–50–P

FEDERAL RESERVE SYSTEM

Federal Open Market Committee; Domestic Policy Directive of June 30-July 1, 1998.

In accordance with § 271.5 of its rules regarding availability of information (12 CFR part 271), there is set forth below the domestic policy directive issued by the Federal Open Market Committee at its meeting held on June 30-July 1, 1998.[1] The directive was issued to the Federal Reserve Bank of New York as follows:

The information reviewed at this meeting suggests that the expansion in economic activity has slowed considerably after a very rapid advance in the first quarter. Nonfarm payroll employment registered another substantial increase in May, and the civilian unemployment rate was unchanged at 4.3 percent. Industrial output picked up in recent months after weakening early this year; however, a strike at General Motors likely depressed output substantially in June. Although retail sales posted large gains in April and May, overall consumer spending appears to have grown less rapidly in the second quarter than in the first. Residential sales have remained exceptionally strong, but housing starts and building permits slipped back in the spring, on a seasonally adjusted basis, from a sharply increased first-quarter level. Available indicators suggest that growth of business fixed investment also is slowing after a surge earlier in the year. Business inventory accumulation appears to have moderated in April from an extraordinarily rapid rate in the first quarter. The nominal deficit on U.S. trade in goods and services continued to widen in April. Developments in the food and energy sectors contributed to a slightly faster advance in consumer prices in May.

Most short -term interest rates have changed little since the meeting on May 19, but longer-term rates have declined somewhat. Share prices in U.S. equity markets remained volatile and changes in major indexes were mixed on balance over the intermeeting period. In foreign exchange markets, the trade-weighted value of the dollar rose sharply through mid-June in terms of other major currencies, declined more recently, but is up somewhat on net since the May meeting; the fluctuations in the average value of the dollar in terms of these major currencies were largely related to movements against the Japanese yen. The dollar has risen further against the currencies of key emerging market economies, particularly some of those in Asia.

Growth of M2 and M3 slowed in the second quarter, but remained fairly robust. For the year through June, both aggregates rose at rates well above the Committee's ranges for the year. Expansion of total domestic nonfinancial debt appears to have moderated somewhat after a pickup earlier in the year.

The Federal Open Market Committee seeks monetary and financial conditions that will foster price stability and promote sustainable growth in output. In furtherance of these objectives, the Committee reaffirmed at this meeting the ranges it had established in February for growth of M2 and M3 of 1 to 5 percent and 2 to 6 percent respectively, measured from the fourth quarter of 1997 to the fourth quarter of 1998. The range for growth of total domestic nonfinancial debt was maintained at 3 to 7 percent for the year. For 1999, the Committee agreed on tentative ranges for monetary growth, measured from the fourth quarter of 1998 to the fourth quarter of 1999, of 1 to 5 percent for M2 and 2 to 6 percent for M3. The Committee provisionally set the associated range for growth of total domestic nonfinancial debt at 3 to 7 percent for 1999. The behavior of the monetary aggregates will continue to be evaluated in the light of progress toward price level stability, movements in their velocities, and developments in the economy and financial markets.

In the implementation of policy for the immediate future, the Committee seeks conditions in reserve markets consistent with maintaining the federal funds rate at an average of around 5-1/2 percent. In the context of the Committee's long-run objectives for price stability and sustainable economic growth, and giving careful consideration to economic, financial, and monetary developments, a somewhat higher federal funds rate would or a slightly lower federal funds rate might be acceptable in the intermeeting period. The contemplated reserve conditions are expected to be consistent with moderate growth in M2 and M3 over coming months.

By order of the Federal Open Market Committee, August 21, 1998.

Donald L. Kohn,

Secretary, Federal Open Market Committee.

[FR Doc. 98–23747 Filed 9–2–98; 8:45 am]

BILLING CODE 6210–01–F

[1] Copies of the Minutes of the Federal Open Market Committee meeting of June 30-July 1, 1998, which include the domestic policy directive issued at that meeting, are available upon request to the Board of Governors of the Federal Reserve System, Washington, D.C. 20551. The minutes are published in the Federal Reserve Bulletin and in the Board's annual report.

GENERAL SERVICES ADMINISTRATION

[OMB Control No. 3090–0246]

Submission for OMB Review; Comment Request Entitled Packing List Clause

AGENCY: Office of Acquisition Policy, GSA.

ACTION: Notice of request for an extension to a previously approved OMB Clearance (3090–0246).

SUMMARY: Under the provisions of the Paperwork Reduction Act of 1995 (44 U.S.C. Chapter 35), the Office of Acquisition Policy has submitted to the Office of Management and Budget (OMB) a request to review and approve an extension of a previously approved information collection requirement concerning Packing List clause.

DATES: Comment Due Date: November 2, 1998.

ADDRESSES: Comments regarding this burden estimate or any other aspect of this collection of information, including suggestions for reducing this burden, should be submitted to: Edward Springer, GSA Desk Officer, Room 3235, NEOB, Washington, DC 20503, and to Marjorie Ashby, General Services Administration (MVP), 1800 F Street NW, Washington, DC 20405.

FOR FURTHER INFORMATION CONTACT: Al Matera, Office of GSA Acquisition Policy (202) 501–1224.

SUPPLEMENTARY INFORMATION:

A. Purpose

The GSA is requesting the Office of Management and Budget (OMB) to review and approve information collection, 3090–0246, concerning Packing List clause. A uniquely numbered Government credit card has been authorized for making payment for orders under $25,000 placed against certain schedule contracts. Acceptance of the card is not mandatory. In order to verify receipt of orders placed orally

the cardholder's name and telephone number must be included on the packing list.

B. Annual Reporting Burden

Respondents: 4,000; annual responses: 931,219; average hours per response: .02; burden hours: 31.

Copy of Proposal

A copy of this proposal may be obtained from the GSA Acquisition Policy Division (MVP), Room 4011, GSA Building, 1800 F Street NW, Washington, DC 20405, or by telephoning (202) 501–3822, or by faxing your request to (202) 501–3341.

Dated: August 27, 1998.

Ida M. Ustad,

Deputy Associate Administrator, Office of Acquisition Policy.

[FR Doc. 98–23731 Filed 9–2–98; 8:45 am]

BILLING CODE 6820–61–M

DEPARTMENT OF HEALTH AND HUMAN SERVICES

Centers for Disease Control and Prevention

Proposed Vaccine Information Materials for Hepatitis B, Haemophilus influenzae type b (Hib), Varicella (Chickenpox), and Measles, Mumps, Rubella (MMR) Vaccines

AGENCY: Centers for Disease Control and Prevention (CDC), Department of Health and Human Services (HHS).

ACTION: Notice with comment period.

SUMMARY: Under the National Childhood Vaccine Injury Act (42 U.S.C. § 300aa-26), CDC must develop vaccine information materials that health care providers are required to give to patients/parents prior to administration of specific vaccines. CDC seeks written comment on proposed new vaccine information materials for hepatitis B, *Haemophilus influenzae* ype b, and *Varicella* vaccines, and revised vaccine information materials for measles, mumps, rubella (MMR) vaccines.

DATES: Written comments are invited and must be received on or before November 2, 1998.

ADDRESSES: Written comments should be addressed to Walter A. Orenstein, M.D., Director, National Immunization Program, Centers for Disease Control and Prevention, Mailstop E–05, 1600 Clifton Road, N.E., Atlanta, Georgia 30333.

FOR FURTHER INFORMATION CONTACT: Walter A. Orenstein, M.D., Director, National Immunization Program, Centers for Disease Control and Prevention, Mailstop E–05, 1600 Clifton Road, N.E., Atlanta, Georgia 30333, telephone (404) 639–8200.

SUPPLEMENTARY INFORMATION: The National Childhood Vaccine Injury Act of 1986 (Public Law 99–660), as amended by Section 708 of Public Law 103–183, added Section 2126 to the Public Health Service Act. Section 2126, codified at 42 U.S.C. § 300aa-26, requires the Secretary of Health and Human Services to develop and disseminate vaccine information materials for distribution by health care providers to any patient (or to the parent or legal representative in the case of a child) receiving vaccines covered under the National Vaccine Injury Compensation Program.

Development and revision of the vaccine information materials have been delegated by the Secretary to the Centers for Disease Control and Prevention (CDC). Section 2126 requires that the materials be developed, or revised, after notice to the public, with a 60-day comment period, and in consultation with the Advisory Commission on Childhood Vaccines, appropriate health care provider and parent organizations, and the Food and Drug Administration. The law also requires that the information contained in the materials be based on available data and information, be presented in understandable terms, and include:

(1) A concise description of the benefits of the vaccine,

(2) A concise description of the risks associated with the vaccine,

(3) A statement of the availability of the National Vaccine Injury Compensation Program, and

(4) Such other relevant information as may be determined by the Secretary.

The vaccines initially covered under the National Vaccine Injury Compensation Program were diphtheria, tetanus, pertussis, measles, mumps, rubella, and poliomyelitis vaccines. Since April 15, 1992, any health care provider who intends to administer one of the covered vaccines is required to provide copies of the relevant vaccine information materials prior to administration of any of these vaccines. (The materials currently in use for measles, mumps, and rubella vaccines and the tetanus diphtheria [Td] vaccine, were published in a **Federal Register** notice on June 20, 1994 (59 FR 31888). The current materials for polio vaccine were published in a **Federal Register** notice on February 6, 1997 (62 FR 5696), and, the current materials for diphtheria, tetanus, and pertussis containing vaccines, other than Td vaccine, were published in a **Federal Register** notice on January 9, 1998 (63 FR 1730). Instructions for use of the vaccine information materials and a list of contacts for obtaining copies of these materials are included in the January 9, 1998 **Federal Register** notice (63 FR 1730).)

Newly Covered Vaccines

With passage of Public Law 105–34, Congress expanded coverage of the National Vaccine Injury Compensation Program, effective August 6, 1997, to include the following additional vaccines: hepatitis B, *Haemophilus influenzae* type b (Hib), and *Varicella* (chickenpox) vaccines. (See 63 FR 25777, May 11, 1998, for information regarding coverage of these vaccines under the Vaccine Injury Compensation Program.) Therefore, as required under 42 U.S.C. 300aa-26, CDC must develop vaccine information materials covering these vaccines.

Included in this notice are proposed vaccine information materials covering hepatitis B, *Haemophilus influenzae* type b (Hib), and *Varicella* vaccines. In addition to proposed materials for these newly covered vaccines, this notice also includes proposed revised vaccine information materials for measles, mumps, rubella (MMR) vaccines. The MMR materials are being revised to follow the format of the materials published since 1997.

The proposed vaccine information materials included in this notice were drafted in consultation with the Advisory Commission on Childhood Vaccines, the Food and Drug Administration, American Academy of Pediatrics, American Nurses Association, Dissatisfied Parents Together, Healthy Start, Immunization Action Coalition, Immunization Education and Action Committee: Healthy Mothers/Healthy Babies Coalition, National Association of Pediatric Nurse Associates and Practitioners, National Association of County Health Officials, National Coalition for Adult Immunization, National Coalition of Hispanic Health and Human Services Organizations (COSSMHO), National Council of La Raza, National Vaccine Advisory Committee, and the National Vaccine Injury Compensation Program. Also, CDC provided copies of the draft materials to other organizations and sought their consultation; however, those organizations did not provide comments. In addition to consultation with these groups, the CDC presented drafts of these vaccine information materials to parents gathered in 18 ethnically and geographically diverse

focus groups. Comments provided by the consultants and focus groups were considered in drafting the proposed vaccine information materials included in this notice.

We invite written comment on the proposed vaccine information materials that follow, entitled ''Hepatitis B Vaccine: What You Need to Know,'' ''*Haemophilus influenzae* type b (Hib) Vaccine: What You Need to Know,'' ''Chickenpox Vaccine: What You Need to Know,'' and ''Measles, Mumps and Rubella Vaccines: What You Need to Know.'' Comments submitted will be considered in finalizing these materials. When the final materials are published in the **Federal Register**, the notice will include an effective date for their use.

* * * * *

Hepatitis B Vaccine—What You Need to Know

1. Why Get Vaccinated?

Hepatitis B is a Serious Disease

The hepatitis B virus can cause short-term (acute) illness that leads to:

- Loss of appetite.
- Tiredness.
- Pain in muscles, joints, and stomach.
- Diarrhea and vomiting.
- Jaundice (yellow skin or eyes).

It can also cause long-term (chronic) illness that leads to:

- Liver damage (cirrhosis).
- Liver cancer.
- Death.

Each year in the United States it is estimated that,

- 64,000 people—mostly young adults—get hepatitis B.
- More than 11,000 people have to stay in the hospital because of hepatitis B.
- About 1.25 million people have chronic hepatitis B infection.
- 4,000–5,000 people die from chronic hepatitis B.

Hepatitis B vaccine can prevent hepatitis B. Hepatitis B vaccine is the first anti-cancer vaccine because it can prevent a form of liver cancer.

2. How is Hepatitis B Virus Spread?

Hepatitis B virus is spread through contact with the blood or body fluids of an infected person. A person can get infected in several ways, such as:

- During birth when the virus passes from an infected mother to her baby.
- By having sex with an infected person.
- By injecting illegal drugs.
- By being stuck with a used needle.
- By sharing personal items, such as a razor or toothbrush, with an infected person.

People can get hepatitis B infection without knowing how they got it. About one third of hepatitis B cases in the United States have an unknown source.

3. Who Should Get Hepatitis B Vaccine and When?

(1) Everyone 18 years of age and younger.

(2) Adults over 18 who are at risk.

Adults at risk for hepatitis B infection include:

- Men or women who have sex with more than one steady partner.
- Men or women who have recently gotten a sexually transmitted disease.
- Injection drug users.
- Men who have sex with other men.
- Household contacts and sex partners of persons with long-term hepatitis B.
- People whose job involves contact with human blood.
- People who live or travel for more than 6 months in countries where hepatitis B is common.
- Clients and staff in institutions for the developmentally disabled.
- Hemodialysis patients.
- Recipients of certain blood products.
- Prisoners in long-term correctional facilities.

If you are not sure whether you are at risk, ask your doctor or nurse.

People should get 3 doses of hepatitis B vaccine, according to the following schedule. *If you miss a dose or get behind schedule, get the next dose as soon as you can. There is no need to start over.*

HEPATITIS B VACCINATION SCHEDULE

WHEN?	WHO?		
	Infant whose mother is infected with hepatitis B	Infant whose mother is not infected with hepatitis B	Older child, adolescent, or adult
First Dose	Within 12 hours of birth	Birth–2 months of age	Any time.
Second Dose	1–2 months of age	1–4 months of age (At least 1 month after first dose).	1–2 months after first dose.
Third Dose	6 months of age	6–18 months of age	4–6 months after first dose.

The second dose must be given at least 1 month after the first dose, and the third dose must be given at least 2 months after the second and at least 4 months after the first. The third dose should not be given to infants younger than 6 months of age.

All three doses are needed for full and lasting immunity.

Ask your doctor or nurse for more information.

Hepatitis B vaccine may be given at the same time as other vaccines.

4. Some People Should Not Get Hepatitis B Vaccine or Should Wait

People should not get hepatitis B vaccine if they have ever had a *serious* allergic reaction to:

—A previous dose of hepatitis B vaccine, or

—Baker's yeast (the kind used for making bread)

People who are moderately or severely ill at the time the shot is scheduled should usually wait until they recover before getting hepatitis B vaccine.

Ask your doctor or nurse for more information.

5. What Are the Risks From Hepatitis B Vaccine?

- A vaccine, like any medicine, is capable of causing life-threatening problems, such as severe allergic reactions. The risk of hepatitis B vaccine causing serious harm, or death, is extremely small.
- Getting hepatitis B vaccine is much safer than getting hepatitis B disease.
- Most people who get hepatitis B vaccine do not have any problems with it.

Mild Problems

- Soreness where the shot was given, lasting a day or two (up to 1 out of 11 children and adolescents, and about 1 out of 4 adults).
- Mild to moderate fever (up to 1 out of 14 children and adolescents, and 1 out of 100 adults).

Severe Problems

- Serious allergic reaction (very rare).

6. What if There is a Moderate or Severe Reaction?

What Should I Look For?

• Any unusual condition, such as a serious allergic reaction, high fever or behavior changes. Signs of a serious allergic reaction can include difficulty breathing, hoarseness or wheezing, hives, paleness, weakness, a fast heart beat or dizziness. If such a reaction were to occur, it would be within a few minutes to a few hours after the shot.

What Should I Do?

• Call a doctor or get the person to a doctor right away.

• Tell your doctor what happened, the date and time it happened, and when the vaccination was given.

• Ask your doctor, nurse, or health department to file a Vaccine Adverse Event Reporting System (VAERS) form, or call VAERS yourself at 1–800–822–7967.

7. The National Vaccine Injury Compensation Program

In the rare event that you or your child has a serious reaction to a vaccine, a Federal program has been created to help you pay for the care of those who have been harmed.

For details about the National Vaccine Injury Compensation program, call 1–800–338–2382 or visit the program's website at http://www.hrsa.dhhs.gov/bhpr/vicp

8. How Can I Learn More?

• Ask your doctor or nurse. They can give you the vaccine package insert or suggest other sources of information.

• Call your local or state health department. They can give you the Parents Guide to Childhood Immunization, Immunization of Adults: A Call to Action, or other information.

• Contact the Centers for Disease Control and Prevention (CDC):

—Call 1–800–232–2522 (English)
—Call 1–888–443–7232 (English)
—Call 1–800–232–0233 (Español)
—Visit the National Immunization Program's website at http://www.cdc.gov/nip
—Visit the Hepatitis Branch's website at http://www.cdc.gov/ncidod/diseases/hepatitis/hepatitis.htm

U.S. Department of Health & Human Services
Centers for Disease Control and Prevention
National Immunization Program
Hepatitis B (00/00/00) (Proposed)
Vaccine Information Statement
42 U.S.C. § 300aa–26

* * * * *

Haemophilus Influenzae Type B (HIB) Vaccine—What You Need to Know

1. What is Hib Disease?

Haemophilus influenzae type b (Hib) disease is a serious disease caused by a bacteria. It usually strikes children under 5 years old.

Your child can get Hib disease by being around other children or adults who may have the bacteria and not know it. The germs spread from person to person through the air. If the germs stay in the child's nose and throat, the child probably will not become sick. But sometimes the germs spread into the lungs or the bloodstream, and then Hib can cause serious problems.

Before Hib vaccine, Hib disease was the leading cause of bacterial meningitis among children under 5 years old in the United States. Meningitis is an infection of the brain and spinal cord coverings which can lead to lasting brain damage.

In addition to meningitis, Hib disease can cause:

• Hearing loss.
• Pneumonia.
• Severe swelling in the throat, making it hard to breathe.
• Infections of the blood, joints, bones, and covering of the heart.
• Death.

Hib Vaccine Can Prevent Hib Disease

Many more children would get Hib disease if we stopped vaccinating.

2. Who Should Get Hib Vaccine and When?

Children Should Get Hib Vaccine At:

✔ 2 months of age
✔ 4 months of age
✔ 6 months of age*
✔ 12–15 months of age

*Depending on what brand of Hib vaccine is used, your child might not need the dose at 6 months of age. Your doctor or nurse will tell you if this dose is needed.

If you miss a dose or get behind schedule, get the next dose as soon as you can. There is no need to start over.

Hib vaccine may be given at the same time as other vaccines.

Older Children and Adults

Children over 5 years old usually do not need Hib vaccine. But some older children or adults with special health conditions should get it. These conditions include sickle cell disease, HIV/AIDS, removal of the spleen, bone marrow transplant, or cancer treatment with drugs. Ask your doctor or nurse for details.

3. Some People Should Not Get Hib Vaccine or Should Wait

People who have ever had a *serious* allergic reaction to a previous dose of Hib vaccine should not get another dose.

Children less than 6 weeks of age should not get Hib vaccine.

People who are moderately or severely ill at the time the shot is scheduled should usually wait until they recover before getting Hib vaccine.

Ask your doctor or nurse for more information.

4. What Are the Risks From Hib Vaccine?

• A vaccine, like any medicine, is capable of causing life-threatening problems, such as severe allergic reactions. The risk of Hib vaccine causing serious harm, or death, is extremely small.

• Getting Hib vaccine is much safer than getting Hib disease.

• Most people who get Hib vaccine do not have any problems with it.

Mild Problems

• Redness, warmth, or swelling where the shot was given (up to 1 out of 25 children).

• Fever over 101°F (up to 1 out of 20 children).

If these problems happen, they usually start within a day of vaccination. They may last 2–3 days.

5. What if There is a Moderate or Severe Reaction?

What Should I Look For?

• Any unusual condition, such as a serious allergic reaction, high fever or behavior changes. Signs of a serious allergic reaction can include difficulty breathing, hoarseness or wheezing, hives, paleness, weakness, a fast heart beat or dizziness.

What Should I Do?

• Call a doctor or get the person to a doctor right away.

• Tell your doctor what happened, the date and time it happened, and when the vaccination was given.

• Ask your doctor, nurse, or health department to file a Vaccine Adverse Event Reporting System (VAERS) form, or call VAERS yourself at 1–800–822–7967.

6. The National Vaccine Injury Compensation Program

In the rare event that you or your child has a serious reaction to a vaccine, a Federal program has been created to help you pay for the care of those who have been harmed.

For details about the National Vaccine Injury Compensation program, call 1–800–338–2382 or visit the program's website at http://www.hrsa.dhhs.gov/bhpr/vicp

7. How Can I Learn More?

• Ask your doctor or nurse. They can give you the vaccine package insert or suggest other sources of information.

• Call your local or state health department. They can give you the Parents Guide to Childhood Immunization or other information.

• Contact the Centers for Disease Control and Prevention (CDC):

—Call 1–800–232–2522 (English)
—Call 1–800–232–0233 (Español)
—Visit the National Immunization Program's website at http://www.cdc.gov/nip

U.S. Department of Health & Human Services
Centers for Disease Control and Prevention
National Immunization Program
Hib (00/00/00) (Proposed)
Vaccine Information Statement
42 U.S.C. 300aa-26

* * * * *

Chickenpox Vaccine—What You Need to Know

1. Why Get Vaccinated?

Chickenpox (also called *Varicella*) is a Common Childhood Disease

It is usually mild, but it can be serious, especially in young infants and adults.

• The chickenpox virus can be spread from person to person through the air, or by contact with fluid from chickenpox blisters.

• It causes a rash, itching, fever, and tiredness.

• It can lead to severe skin infection, scars, pneumonia, brain damage, or death.

• A person who has had chickenpox can get a painful rash called shingles years later.

• About 12,000 people are hospitalized for chickenpox each year in the United States.

• About 100 people die each year in the United States as a result of chickenpox.

Chickenpox Vaccine Can Prevent Chickenpox

2. Chickenpox Vaccine

• If someone who has been vaccinated does get chickenpox, it is usually very mild. They have fewer spots, are less likely to have a fever, and will recover faster.

3. Who Should Get Chickenpox Vaccine and When?

• Children should get chickenpox vaccine between 12 and 18 months of age.

• Older children, or adults, who have never had chickenpox or chickenpox vaccine should get the vaccine. It can be given at any age.

Dosage:

Children 1–12 years of age: 1 dose
Anyone 13 years of age or older: 2 doses, 4–8 weeks apart

Ask your doctor or nurse for details.

Chickenpox vaccine may be given at the same time as other vaccines.

4. Some People Should Not Get Chickenpox Vaccine or Should Wait

• People who have ever had a *serious* allergic reaction to gelatin, the antibiotic neomycin, or a previous dose of chickenpox vaccine should not get the vaccine.

• People who are moderately or severely ill at the time the shot is scheduled should usually wait until they recover before getting chickenpox vaccine.

• Pregnant women should wait to get chickenpox vaccine until after they have given birth.

• Some people should check with their doctor about whether they should get chickenpox vaccine. These people include anyone who:

—Has HIV/AIDS, or another disease that affects the immune system
—Is being treated with drugs that affect the immune system, such as steroids, for 2 weeks or longer
—Has any kind of cancer
—Is taking cancer treatment with x-rays or drugs

• People who recently had a transfusion or were given other blood products should ask their doctor when they may get chickenpox vaccine.

If you are not sure, ask your doctor or nurse.

5. What Are the Risks From Chickenpox Vaccine?

• A vaccine, like any medicine, is capable of causing life-threatening problems, such as severe allergic reactions. The risk of chickenpox vaccine causing serious harm, or death, is extremely small.

• Getting chickenpox vaccine is much safer than getting chickenpox disease.

• Most people who get chickenpox vaccine do not have any problems with it.

Mild Problems

• Soreness or swelling where the shot was given (about 1 out of 5 children and up to 1 out of 3 adolescents and adults).

• Fever (1 out of 6 children, 1 out of 10 adolescents or adults).

• Mild rash, up to a month after vaccination (up to 1 out of 16 people getting the vaccine). These people can, rarely, spread the vaccine virus to other members of their household.

Moderate Problems

• Seizure (jerking or staring) caused by fever (less than 1 out of 1,000 people getting the vaccine).

Severe Problems

Some severe problems, including pneumonia, brain damage, or low blood count, have been reported after chickenpox vaccination. These happen so rarely experts cannot tell whether they are caused by the vaccine or not. If they are, it is extremely rare.

6. What if There is a Moderate or Severe Reaction?

What Should I Look For?

Any unusual condition, such as a serious allergic reaction, high fever or behavior changes. Signs of a serious allergic reaction can include difficulty breathing, hoarseness or wheezing, hives, paleness, weakness, a fast heart beat or dizziness. If it occurs, a high fever or seizure would occur one to six weeks after the shot.

What Should I Do?

• Call a doctor or get the person to a doctor right away.

• Tell your doctor what happened, the date and time it happened, and when the vaccination was given.

• Ask your doctor, nurse, or health department to file a Vaccine Adverse Event Reporting System (VAERS) form, or call VAERS yourself at 1–800–822–7967.

7. The National Vaccine Injury Compensation Program

In the rare event that you or your child has a serious reaction to a vaccine, a Federal program has been created to help you pay for the care of those who have been harmed.

For details about the National Vaccine Injury Compensation program, call 1–800–338–2382 or visit the program's website at http://www.hrsa.dhhs.gov/bhpr/vicp

8. How Can I Learn More?

• Ask your doctor or nurse. They can give you the vaccine package insert or suggest other sources of information.

• Call your local or state health department. They can give you the Parents Guide to Childhood Immunization, Immunization of Adults: A Call to Action, or other information.

• Contact the Centers for Disease Control and Prevention (CDC):
—Call 1–800–232–2522 (English)
—Call 1–800–232–0233 (Español)
—Visit the National Immunization Program's website at http://www.cdc.gov/nip

U.S. Department of Health & Human Services
Centers for Disease Control and Prevention
National Immunization Program
Varicella (00/00/00) (Proposed)
Vaccine Information Statement
42 U.S.C. § 300aa–26

* * * * *

Measles, Mumps and Rubella Vaccines—What You Need To Know

1. Why Get Vaccinated?

Measles, Mumps, and Rubella Are Serious Diseases

Measles

• Measles virus causes rash, cough, runny nose, eye irritation, and fever.
• It can lead to ear infection, pneumonia, seizures (jerking and staring), brain damage, and death.

Mumps

• Mumps virus causes fever, headache, and swollen glands.
• It can lead to deafness, meningitis (infection of the brain and spinal cord covering), painful swelling of the testicles, and, rarely, death.

Rubella (German Measles)

• Rubella virus causes rash, mild fever, swollen glands, and arthritis (mostly in women).
• If a woman gets rubella while she is pregnant, she could have a miscarriage or her baby could be born with serious birth defects.

You or your child could catch these diseases by being around someone who has them. They spread from person to person through the air.

Measles, Mumps, and Rubella (MMR) Vaccine Can Prevent These Diseases

Most children who get their MMR shots will not get these diseases. Many more children would get them if we stopped vaccinating.

2. Who Should Get MMR Vaccine and When?

Children should get 2 doses of MMR vaccine, the first at:
√ 12–15 months of age
And the second at:
√ 4–6 years of age

These are the recommended ages. But children can get the second dose of MMR vaccine at any age, as long as it is at least 28 days after the first dose.

Some Adults Should Also Get MMR Vaccine

Generally, anyone 18 years of age or older, who was born after 1957, should get at least one dose of MMR vaccine unless they:
• Have documentation of at least one dose each of measles, mumps, and rubella vaccines,
• Have other acceptable evidence of immunity to these three diseases, or
• Have a medical reason why they should not get the vaccines (see #3, below).

Ask your doctor or nurse for more information.

Adults with a special need for these three vaccines include:
• College students, trade school students, and other students beyond high school.
• People working in hospitals and other medical facilities.
• International travelers and passengers on cruise ships.
• Women of childbearing age (who are not pregnant).
• People who move to the US from countries that do not have routine rubella vaccination.

MMR vaccine may be given at the same time as other vaccines. Immunity from MMR vaccine probably lasts for life.

3. Some People Should Not Get MMR Vaccine or Should Wait

• People who have ever had a *serious* allergic reaction to gelatin, the antibiotic neomycin, or a previous dose of MMR vaccine should not get the vaccine.
• People who are moderately or severely ill at the time the shot is scheduled should usually wait until they recover before getting MMR vaccine.
• Pregnant women should wait to get MMR vaccine until after they have given birth. Women should not get pregnant for 3 months after getting MMR vaccine.
• Some people should check with their doctor about whether they should get MMR vaccine. These people include anyone who:
—Has HIV/AIDS, or another disease that affects the immune system.
—Is being treated with drugs that affect the immune system, such as steroids, for 2 weeks or longer.
—Has any kind of cancer.
—Is taking cancer treatment with x-rays or drugs.
—Has ever had a low platelet count (a blood disorder).

• People who recently had a transfusion or were given other blood products should ask their doctor when they may get MMR vaccine.

If you are not sure, ask your doctor or nurse.

4. What Are the Risks From MMR Vaccine?

• A vaccine, like any medicine, is capable of causing life-threatening problems, such as severe allergic reactions. The risk of MMR vaccine causing serious harm, or death, is extremely small.
• Getting MMR vaccine is much safer than getting any of these three diseases.
• Most people who get MMR vaccine do not have any problems with it.

Mild Problems

• Fever (up to 1 person out of 6).
• Mild rash (about 1 person out of 20).
• Swelling of glands in the cheeks, neck, or under the jaw (rare).

If these problems occur, it is usually within 7–12 days after the shot. They occur less often after the second dose.

Moderate Problems

• Seizure (jerking or staring) caused by fever (about 1 out of 3,000 doses).
• Temporary pain and stiffness in the joints, mostly in teenage or adult women (up to 1 out of 4).
• Low platelet count, which can cause a bleeding disorder (about 1 out of 30,000 doses).

Severe Problems (Very Rare)

• Serious allergic reaction (less than 1 out of a million doses).

Several other severe problems have been known to occur after a child gets MMR vaccine. But this happens so rarely, experts cannot be sure whether they are caused by the vaccine or not. These include:
• Deafness.
• Long seizures, coma, or lowered consciousness.
• Permanent brain damage.

5. What if There is a Moderate or Severe Reaction?

What Should I Look For?

• Any unusual condition, such as a serious allergic reaction, high fever or behavior changes. Signs of a serious allergic reaction can include difficulty breathing, hoarseness or wheezing, hives, paleness, weakness, a fast heart beat or dizziness. If it occurs, a high fever or seizure would occur 1 to 2 weeks after the shot.

What Should I Do?

• Call a doctor or get the person to a doctor right away.
• Tell your doctor what happened, the date and time it happened, and when the vaccination was given.

• Ask your doctor, nurse, or health department to file a Vaccine Adverse Event Reporting System (VAERS) form, or call VAERS yourself at 1–800–822–7967.

6. The National Vaccine Injury Compensation Program

In the rare event that you or your child has a serious reaction to a vaccine, a Federal program has been created to help you pay for the care of those who have been harmed.

For details about the National Vaccine Injury Compensation program, call 1–800–338–2382 or visit the program's website at http://www.hrsa.dhhs.gov/bhpr/vicp

7. How Can I Learn More?

• Ask your doctor or nurse. They can give you the vaccine package insert or suggest other sources of information.

• Call your local or state health department. They can give you the Parents Guide to Childhood Immunization, Immunization of Adults: A Call to Action, or other information.

• Contact the Centers for Disease Control and Prevention (CDC):

—Call 1–800–232–2522 (English)
—Call 1–800–232–0233 (Español)
—Visit the National Immunization Program's website at http://www.cdc.gov/nip

U.S. Department of Health & Human Services
Centers for Disease Control and Prevention
National Immunization Program
MMR (00/00/00) (Proposed)
Vaccine Information Statement
42 U.S.C. 300aa–26

Dated: August 28, 1998.

Thena M. Durham,

Acting Associate Director for Management and Operations, Centers for Disease Control and Prevention (CDC).

[FR Doc. 98–23736 Filed 9–2–98; 8:45 am]

BILLING CODE 4163–18–P

DEPARTMENT OF HEALTH AND HUMAN SERVICES

Administration for Children and Families

Submission for OMB Review; Comment Request

Title: Child Care and Development Fund Annual Report on Services Provided (ACF–700).

OMB No.: 0980–0241.

Description: The Child Care and Development Fund (CCDF) Report is the required annual tribal aggregate information on services provided through the CCDF, which is required per Child Care and Development Block Grant (CCDBG) Final Rule 45 CFR Parts 98 and 99. Tribes are required to submit annual aggregate data appropriate to tribal programs on children and families receiving CCDF-funds or CCDBG funded Child care services. The CCDF regulations require Tribal Lead Agencies to report a supplemental narrative which describes general child care activities and actions in the Tribal Lead Agency's service area and is not limited to the CCDF-funded activities but addresses all child care in the Tribal Lead Agency's service area. This information will be included in the Secretary's report to Congress, as appropriate, and will be shared with all Tribal Lead Agencies to inform them of CCDF or CCDBG-funded activities in other tribal programs.

Respondents: Tribal Governments.

Instrument	Number of respondents	Number of responses per respondent	Average burden hours per response	Total burden hours
CCDF Annual Report (ACF–700)	224	1	40	9,760

Estimated Total Annual Burden Hours: 9,760.

Additional Information: Copies of the proposed collection may be obtained by writing to The Administration for Children and Families, Office of Information Services, 370 L'Enfant Promenade, SW, Washington, DC 20447, Attn: ACF: ACF Reports Clearance Officer.

OMB Comment:

OMB is required to make a decision concerning the collection information between 30 and 60 days after publication of this document in the **Federal Register**. Therefore, a comment is best assured of having its full effect if OMB receives it within 30 days of publication. Written comments and recommendations for the proposed information collection should be sent directly to the followin Office of Management and Budget, Paperwork Reduction Project, 725 17th Street, NW, Washington, DC 20503, Attn: Ms. Laura Oliven.

Dated: August 28, 1998.

Bob Sargis,

Acting Reports Clearance Officer.

[FR Doc. 98–23745 Filed 9–2–98; 8:45 am]

BILLING CODE 4184–01–M

DEPARTMENT OF HEALTH AND HUMAN SERVICES

Food and Drug Administration

[Docket No. 98N–0698]

Agency Information Collection Activities: Proposed Collection; Comment Request; Survey of Consumer Attitudes Toward Potential Changes in Food Standards of Identity

AGENCY: Food and Drug Administration, HHS.

ACTION: Notice.

SUMMARY: The Food and Drug Administration (FDA) is announcing an opportunity for public comment on the proposed collection of certain information by the agency. Under the Paperwork Reduction Act of 1995 (the PRA), Federal agencies are required to publish notice in the **Federal Register** concerning each proposed collection of information, and to allow 60 days for public comment in response to the notice. This notice solicits comments on a voluntary survey of consumer attitudes toward potential changes in food standards of identity.

DATES: Submit written comments on the collection of information by November 2, 1998.

ADDRESSES: Submit written comments on the collection of information to the Dockets Management Branch (HFA–305), Food and Drug Administration, 5630 Fishers Lane, rm. 1061, Rockville, MD 20852. All comments should be identified with the docket number found in brackets in the heading of this document.

FOR FURTHER INFORMATION CONTACT: Margaret R. Schlosburg, Office of Information Resources Management (HFA–250), Food and Drug Administration, 5600 Fishers Lane, Rockville, MD 20857, 301–827–1223.

SUPPLEMENTARY INFORMATION: Under the PRA (44 U.S.C. 3501–3520), Federal agencies must obtain approval from the Office of Management and Budget

(OMB) for each collection of information they conduct or sponsor. ''Collection of information'' is defined in 44 U.S.C. 3502(3) and 5 CFR 1320.3(c) and includes agency requests or requirements that members of the public submit reports, keep records, or provide information to a third party. Section 3506(c)(2)(A) of the PRA (44 U.S.C. 3506(c)(2)(A)) requires Federal agencies to provide a 60-day notice in the **Federal Register** concerning each proposed collection of information, before submitting the collection to OMB for approval. To comply with this requirement, FDA is publishing notice of the proposed collection of information listed below.

With respect to the following collection of information, FDA invites comments on: (1) Whether the proposed collection of information is necessary for the proper performance of FDA's functions, including whether the information will have practical utility; (2) the accuracy of FDA's estimate of the burden of the proposed collection of information, including the validity of the methodology and assumptions used; (3) ways to enhance the quality, utility, and clarity of the information to be collected; and (4) ways to minimize the burden of the collection of information on respondents, including through the use of automated collection techniques, when appropriate, and other forms of information technology.

Survey of Consumer Attitudes Toward Potential Changes in Food Standards of Identity

Under section 903(b)(2) of the Federal Food, Drug, and Cosmetic Act (21 U.S.C. 393(b)(2)), FDA is authorized to conduct research relating to foods and to conduct educational and public information programs relating to the safety of the nation's food supply. FDA is planning to conduct a telephone-mail-telephone consumer survey about consumer attitudes towards potential changes in food standards of identity under this authority. A nationally representative sample of 600 adults, who regularly do the food shopping for their households, will be selected at random and asked if they would agree to complete a mail survey. Participation will be voluntary. Detailed information will be obtained about how consumers would be affected by changes to standards, and what their preferences are for retaining, revising, or eliminating standards. FDA is reviewing standard of identity regulations for foods in order to determine which elements of those regulations are most important to fulfilling the goals of those regulations. The information to be collected will address consumer attitudes toward potential changes in the standards of identity for particular products. The products will be chosen to represent general categories of products that share theoretically relevant characteristics. The changes will be chosen to represent general types of changes that might be made to standards of identity. Therefore, the information collected on particular changes in the standards of identity for particular products should provide information that can be generalized to other changes and other products. The information collected will be used to shape FDA's policy on revising standards of identity.

FDA estimates the burden of this collection of information as follows:

TABLE 1.—ESTIMATED ANNUAL REPORTING BURDEN[1]

	No. of Respondents	Annual Frequency per Response	Total Annual Responses	Hours per Response	Total Hours
Receive initial recruiting telephone call	600	1	600	0.8	48
Read instructions and complete mail survey	600	1	600	0.59	354
Complete followup telephone interview	600	1	600	0.08	48
Total					450

[1] There are no capital costs or operating and maintenance costs associated with this collection of information.

The burden hours are based on two rounds of focus groups conducted to test the instrument. The length of the initial and followup interviews based on similar studies are based on similar studies that have been conducted.

Dated: August 26, 1998.

William K. Hubbard,

Associate Commissioner for Policy Coordination.

[FR Doc. 98–23752 Filed 9–2–98; 8:45 am]

BILLING CODE 4160–01–F

DEPARTMENT OF HEALTH AND HUMAN SERVICES

Health Resources and Services Administration

Cooperative Agreement With the National Foundation for the Centers for Disease Control and Prevention

AGENCY: Health Resources and Services Administration (HRSA), DHHS.

ACTION: Notice of cooperative agreement award.

SUMMARY: The Health Resources and Services Administration (HRSA) announces its intent to award funds in fiscal year (FY) 1998 to provide support of a cooperative agreement with the National Foundation for the Centers for Disease Control and Prevention, Inc. (CDC Foundation), Atlanta, Georgia for the implementation of the Public Health Management Training Network.

Multiple reports cite a widening gap in the U.S. between the challenges to improve the health of Americans and the capacity of the public health workforce to meet these challenges. Given the increasing challenges facing our State and local agencies, this cooperative agreement is intended to examine curriculum development and strengthen the public health training and education infrastructure needed to maintain basic agency management competencies needed for the 21st century. Public health leaders and managers, their colleagues in health care organizations, community leaders and others critical to the public's health now work in an environment of change for which most have had little formal preparation. Most have strong technical training in public health, but few have the management skills and resources essential in the new era of Government downsizing, shrinking resources, managed care proliferation and emerging new health risks. This project will be coordinated with the ''Turning Point'' initiative, a collaboration of the Robert Wood Johnson Foundation, the W. K. Kellogg Foundation and the Centers for Disease Control and Prevention (CDC) to address management development. The cooperative agreement award will implement the Public Health Training Network through (1) the design and implementation of a model for improving the management capacity of

State, district, and local public health agencies; (2) the delivery of state-of-the-art, practical management training to State and local agency managers; (3) evaluation of the management training project; and (4) national dissemination of the findings.

HRSA plans to award a cooperative agreement to the CDC Foundation because of its unique characteristics, skills, and superior qualifications in this area. The CDC Foundation is the only organization with this combination of purposes, goals and objectives needed to produce the variety of activities contemplated for the proposed cooperative agreement. The CDC Foundation is a Congressionally chartered private, not-for-profit corporation. The CDC Foundation's role is to seek support for purposes which include: (a) enhancing CDC Foundation's ability to attract talented scientists and leaders; (b) providing philanthropic investment for research and community programs; (c) encouraging sound health policies; and (d) securing special funds and endowments to provide enduring support for critical needs.

HRSA will join with the members of the ''Turning Point'' initiative to implement the Public Health Management Training Network. HRSA will do the following:

(1) Collaborate with the CDC Foundation in all stages of the project.

(2) Provide programmatic and technical assistance.

(3) Participate in improving program performance through consultation based on information and activities of other projects.

(4) Participate in planning conferences, meetings, or workgroups conducted during the period of the cooperative agreement.

(5) Maintain an ongoing dialogue with the partners concerning program plans, policies and other issues such as the role of primary care and managed care, which may have major implications for any activities undertaken by the applicant under the Cooperative Agreement.

This cooperative agreement is authorized under Section 301 of the Public Health Service Act.

AVAILABILITY OF FUNDS: HRSA and CDC will make available approximately $250,000 each to support this cooperative agreement for a budget period of one year and a project period of four years beginning in FY 1998.

OTHER AWARD INFORMATION: This program is not subject to the provisions of Executive Order 12372, Intergovernmental Review of Federal Programs (as implemented by 45 CFR Part 100).

FOR FURTHER INFORMATION CONTACT: Ms. Laura M. Kruse, Center for Public Health Practice, Parklawn Building, Room 14–15, Rockville, MD 20857. (301) 443–0569. Grants Management inquires may be directed to Ms. Wilma Johnson, (301) 443–6880.

Dated: August 27, 1998.

Claude Earl Fox,

Administrator.

[FR Doc. 98–23753 Filed 9–2–98; 8:45 am]

BILLING CODE 4160–15–U

DEPARTMENT OF HEALTH AND HUMAN SERVICES

Health Resources and Services Administration

Statement of Organization, Functions, and Delegations of Authority

This notice amends Part R of the Statement of Organization Functions and Delegations of Authority of the Department of Health and Human Services (DHHS), Health Resources and Services Administration (60 FR 56605 as amended November 6, 1995, as last amended at 63 FR 44865–66 dated August 21, 1998). This notice reflects the establishment of the Health Resources and Services Administration (HRSA), Center for Managed Care (CMC).

Establish the Center for Managed Care (RAC) in the Office of the Administrator to read as follows:

The Center for Managed Care serves as the focal point within the Health Resources and Services Administration (HRSA) for leadership, coordination, and advancement of managed care systems for safety net providers serving at risk, vulnerable populations and for training programs for health professionals. The Center for Managed Care carries out the following functions. Specifically: provides leadership within HRSA for the development of managed care policies and programs and in coordinating policy development with other Departmental agencies; (2) provides technical and other support to HRSA components and other mission related agencies as they establish managed care initiatives; (3) provides technical assessment and training to HRSA grantees and related safety net providers and health professions training institutions in all aspects of managed care including dissemination of best practices; (4) develops working relationships with the private managed care industry to assure mutual areas of cooperation, maximization of expertise and coordination; (5) assesses new and existing managed care systems and advises the HRSA Administrator on strategies to maximize the application of these systems to HRSA's programs; (6) works with Foundations, private agencies and other Federal, State, and local agencies to assure effective development of policies, resources, program development, and resolution of program barriers and issues.

Delegations of Authority

All delegations and redelegations of authority which were in effect immediately prior to the effective date hereof have been continued in effect in them or their successors pending further redelegation.

This reorganization is effective upon date of signature.

Dated: August 26, 1998.

Claude Earl Fox,

Administrator.

[FR Doc. 98–23754 Filed 9–2–98; 8:45 am]

BILLING CODE 4160–15–P

DEPARTMENT OF HOUSING AND URBAN DEVELOPMENT

[Docket No. FR–4349–N–34]

Submission for OMB Review: Comment Request

AGENCY: Office of the Assistant Secretary for Administration HUD.

ACTION: Notice.

SUMMARY: The proposed information collection requirement described below has been submitted to the Office of Management and Budget (OMB) for review, as required by the Paperwork Reduction Act. The Department is soliciting public comments on the subject proposal.

DATES: Comments due date: October 5, 1998.

ADDRESSES: Interested persons are invited to submit comments regarding this proposal. Comments must be received within thirty (30) days from the date of this Notice. Comments should refer to the proposal by name and/or OMB approval number and should be sent to: Joseph F. Lackey, Jr., OMB Desk Officer, Office of Management and Budget, Room 10235, New Executive Office Building, Washington, DC 20503.

FOR FURTHER INFORMATION CONTACT: Wayne Eddins, Reports Management Officer, Department of Housing and Urban Development, 451 7th Street, Southwest, Washington, DC 20410, telephone (202) 708–1305. This is not a toll-free number. Copies of the proposed

forms and other available documents submitted to OMB may be obtained from Mr. Eddins.

SUPPLEMENTARY INFORMATION: The Department has submitted the proposal for the collection of information, as described below, to OMB for review, as required by the Paperwork Reduction Act (44 U.S.C. Chapter 35).

The Notice lists the following information: (1) the title of the information collection proposal; (2) the office of the agency to collect the information; (3) the OMB approval number, if applicable; (4) the description of the need for the information and its proposed use; (5) the agency form number, if applicable; (6) what members of the public will be affected by the proposal; (7) how frequently information submissions will be required; (8) an estimate of the total number of hours needed to prepare the information submission including number of respondents, frequency of response, and hours of response; (9) whether the proposal is new, an extension, reinstatement, or revision of an information collection requirement; and (10) the names and telephone numbers of an agency official familiar with the proposal and of the OMB Desk Officer for the Department.

Authority: Section 3507 of the Paperwork Reduction Act of 1995, 44 U.S.C. 35, as amended.

Dated: August 27, 1998.

David S. Cristy,

Director, IRM Policy and Management Division.

Title of Proposal: Case Studies of Conversion of Development-Based Assistance to Household-Based Assistance.

Office: Policy, Development and Research.

OMB Approval Number: 2528–xxxx.

Description of the Need for the Information and its Proposed Use: This exploratory study will describe the impact of the conversion from property-based to household-based assistance on residents and the characteristics of developments that convert. Properties are those whose owners have opted-out of their Section 8 contracts and/or prepaid their HUD-insured mortgages. This survey will examine resident experiences and outcomes.

Form Number: None.

Respondents: Individuals or Households.

Frequency of Submission: On Occasion.

	Number of respondents	×	Frequency of response	×	Hours per response	=	Burden hours
	420		1		.25		105

Total Estimated Burden Hours: 105.

Status: New Collection.

Contact: Harold Holzman, HUD, (202) 708–1336 x5709; Joseph F. Lackey, Jr., OMB, (202) 395–7316.

Dated: August 27, 1998.

[FR Doc. 98–23821 Filed 9–2–98; 8:45 am]

BILLING CODE 4210–01–M

DEPARTMENT OF HOUSING AND URBAN DEVELOPMENT

[Docket No. FR–4349–N–35]

Submission for OMB Review: Comment Request

AGENCY: Office of the Assistant Secretary for Administration HUD.

ACTION: Notice.

SUMMARY: The proposed information collection requirement described below has been submitted to the Office of Management and Budget (OMB) for review, as required by the Paperwork Reduction Act. The Department is soliciting public comments on the subject proposal.

DATES: Comments due date: October 5, 1998.

ADDRESSES: Interested persons are invited to submit comments regarding this proposal. Comments must be received within thirty (30) days from the date of this Notice. Comments should refer to the proposal by name and/or OMB approval number and should be sent to: Joseph F. Lackey, Jr., OMB Desk Officer, Office of Management and Budget, Room 10235, New Executive Office Building, Washington, DC 20503.

FOR FURTHER INFORMATION CONTACT: Wayne Eddins, Reports Management Officer, Department of Housing and Urban Development, 451 7th Street, Southwest, Washington, DC 20410, telephone (202) 708–1305. This is not a toll-free number. Copies of the proposed forms and other available documents submitted to OMB may be obtained from Mr. Eddins.

SUPPLEMENTARY INFORMATION: The Department has submitted the proposal for the collection of information as described below, to OMB for review, as required by the Paperwork Reduction Act (44 U.S.C. Chapter 35).

The Notice lists the following information: (1) the title of the information collection proposal; (2) the office of the agency to collect the information; (3) the OMB approval number, if applicable; (4) the description of the need for the information and its proposed use; (5) the agency form number, if applicable; (6) what members of the public will be affected by the proposal; (7) how frequently information submissions will be required; (8) an estimate of the total number of hours needed to prepare the information submission including number of respondents, frequency of response, and hours of response; (9) whether the proposal is new, an extension, reinstatement, or revision of an information collection requirement; and (10) the names and telephone numbers of an agency official familiar with the proposal and of the OMB Desk Officer for the Department.

Authority: Section 3507 of the Paperwork Reduction Act of 1995, 44 U.S.C. 35, as amended.

Dated: August 27, 1998.

David S. Cristy,

Director, IRM Policy and Management Division.

Title of Proposal: Mark to Market Portfolio Reengineering Demonstration Program Guidelines.

Office: Housing.

OMB Approval Number: 2502–0519.

Description of the Need for the Information and Its Proposed Use: This information collection is required in connection with HUD's issuance of a NOFA that will advertise the availability of funds for Outreach and Training Grants and Intermediary Technical Assistance Grants. The grants are available to non profit organizations who will carry out technical assistance activities in M2M eligible properties.

Form Number: None.

Respondents: Businesses or Other For-Profit.

Frequency of Submission: Quarterly.

Reporting burden:

	Number of respondents	×	Frequency of response	×	Hours per response	=	Burden hours
FY 1998	150		1		33.33		5,000
FY 1998 (transition)	30		1		33.33		1,000

Total Estimated Burden Hours: 6,000.

Status: Revision.

Contact: Arthur Goldstein, HUD, (202) 708–2300 x2657; Joseph F. Lackey, Jr., OMB, (202) 395–7316.

Dated: August 27, 1998.

[FR Doc. 98–23822 Filed 9–2–98; 8:45 am]

BILLING CODE 4210–01–M

DEPARTMENT OF THE INTERIOR

Bureau of Land Management

[AK–962–1410–00–P]

Notice for Publication; AA–11774, Alaska Native Claims Selection

In accordance with Departmental regulation 43 CFR 2650.7(d), notice is hereby given that a decision to issue conveyance under the provisions of Sec. 14(h)(1) of the Alaska Native Claims Settlement Act of December 18, 1971, 43 U.S.C. 1601, 1613(h)(1), will be issued to Koniag, Inc., Regional Native Corporation for approximately 2.1 acres. The lands involved are in the vicinity of Ugaiushak Island, Alaska.

Seward Meridian, Alaska

T. 39 S., R. 48 W.,
Sec. 24.

A notice of the decision will be published once a week, for four (4) consecutive weeks, in the *Anchorage Daily News*. Copies of the decision may be obtained by contacting the Alaska State Office of the Bureau of Land Management, 222 West Seventh Avenue, #13, Anchorage, Alaska 99513–7599 ((907) 271–5960).

Any party claiming a property interest which is adversely affected by the decision, an agency of the Federal government or regional corporation, shall have until October 5, 1998, to file an appeal. However, parties receiving service by certified mail shall have 30 days from the date of receipt to file an appeal. Appeals must be filed in the Bureau of Land Management at the address identified above, where the requirements for filing an appeal may be obtained. Parties who do not file an appeal in accordance with the requirements of 43 CFR Part 4, Subpart E, shall be deemed to have waived their rights.

Patricia A. Baker,

Land Law Examiner, ANCSA Team, Branch of 962 Adjudication.

[FR Doc. 98–23733 Filed 9–2–98; 8:45 am]

BILLING CODE 4310–$$–U

DEPARTMENT OF THE INTERIOR

Bureau of Land Management

[AK–962–1410–00–P]

Notice for Publication; AA–11774, Alaska Native Claims Selection

In accordance with Departmental regulation 43 CFR 2650.7(d), notice is hereby given that a decision to issue conveyance under the provisions of Sec. 14(h)(1) of the Alaska Native Claims Settlement Act of December 18, 1971, 43 U.S.C. 1601, 1613(h)(1), will be issued to Koniag, Inc., Regional Native Corporation for approximately 3.5 acres. The lands involved are in the vicinity of Chowiet Island, Alaska.

Seward Meridian, Alaska

T. 48 S., R. 47 W.,
Sec. 7.

A notice of the decision will be published once a week, for four (4) consecutive weeks, in the *Anchorage Daily News*. Copies of the decision may be obtained by contacting the Alaska State Office of the Bureau of Land Management, 222 West Seventh Avenue, #13, Anchorage, Alaska 99513–7599 ((907) 271–5960).

Any party claiming a property interest which is adversely affected by the decision, an agency of the Federal government or regional corporation, shall have until October 5, 1998, to file an appeal. However, parties receiving service by certified mail shall have 30 days from the date of receipt to file an appeal. Appeals must be filed in the Bureau of Land Management at the address identified above, where the requirements for filing an appeal may be obtained. Parties who do not file an appeal in accordance with the requirements of 43 CFR Part 4, Subpart E, shall be deemed to have waived their rights.

Patricia A. Baker,

Land Law Examiner, ANCSA Team, Branch of 962 Adjudication.

[FR Doc. 98–23734 Filed 9–2–98; 8:45 am]

BILLING CODE 4310–$$–U

DEPARTMENT OF THE INTERIOR

Bureau of Land Management

[CA–067–1430–00; R04872, CA–8289]

Intent To Amend the California Desert Conservation Area Plan

AGENCY: Bureau of Land Management.

ACTION: Notice of intent.

SUMMARY: Pursuant to 43 CFR 1610.2(c), notice is hereby given that the Bureau of Land Management proposes to amend the California Desert Conservation Area (CDCA) Plan, 1980 to facilitate the sale of public land. The proposed amendment will change the Multiple Use Classification (MUC) from Limited (L) to Moderate (M) for the following public land:

San Bernardino Meridian, Imperial County, California,
T.16S., R.9E., sec. 13, SW¼SW¼, (40 acres);
T.15S., R.16E., sec. 13, SW¼NW¼, (40 acres).

SUPPLEMENTARY INFORMATION: According to the CDCA Plan, the sale of public land is allowed only in MUC M or unclassified lands. The above-described lands, currently leased to the County of Imperial for the Ocotillo Solid Waste Sanitary Landfill and the Holtville Solid Waste Sanitary Landfill are classified MUC L. These two parcels of land are being considered for conveyance to the County of Imperial under the provisions of the Recreation and Public Purposes Act of June 14, 1926, as amended (43 U.S.C. 869 *et seq.*) for continued use as solid waste sanitary landfills. Decisions on the proposed plan amendment will be determined through the environmental assessment process in accordance with the National Environmental Policy Act of 1969 and CFR 1610.5–5.

DATES: Written comments on this plan amendment will be accepted on or before October 5, 1998. Please address comments to Terry A. Reed, Field Manager, Bureau of Land Management,

El Centro Field Office, 1661 South 4th Street, El Centro, CA 92243–4561.

FOR FURTHER INFORMATION CONTACT: Linda Self, Realty Specialist, at the above address or telephone (760) 337–4426.

Dated: August 26, 1998.

Thomas F. Zale,

Acting Field Manager.

[FR Doc. 98–23800 Filed 9–2–98; 8:45 am]

BILLING CODE 4310–40–P

DEPARTMENT OF THE INTERIOR

Bureau of Land Management

[OR–050–1020–00: GP8–0296]

Notice of Meeting of the John Day–Snake Resource Advisory Council's John Day River Planning Sub-Group

AGENCY: Bureau of Land Management, Interior.

ACTION: Meeting of the John Day–Snake Resource Advisory Council; Fossil, Oregon; September 18, 1998 and October 16, 1998.

SUMMARY: A meeting of the John Day–Snake Resource Advisory Council's John Day River sub-group will be held on September 18, 1998 and October 16, 1998 from 9:00 am to 3:00 pm at the Wheeler County Courthouse in Fossil, Oregon. The meetings are open to the public. Public comments will be received at 1:00 pm on both of these days. The new schedule for completion of the John Day River Plan and Environmental Impact Statement (EIS) will be discussed, along with the scope of the plan, issues and alternatives to be addressed and other items.

FOR FURTHER INFORMATION CONTACT: Dan Wood, Bureau of Land Management, Prineville District Office, 3050 NE Third Street, PO Box 550, Prineville, Oregon, 97754, or call 541–416–6700.

Dated: August 25, 1998.

Donald L. Smith,

Acting District Manager.

[FR Doc. 98–23806 Filed 9–2–98; 8:45 am]

BILLING CODE 4310–33–M

DEPARTMENT OF THE INTERIOR

Bureau of Land Management

[WO–200–08–1020–00]

Science Advisory Board

AGENCY: Bureau of Land Management, Interior.

ACTION: Science Advisory Board—Notice of meeting.

SUMMARY: This notice is published in accordance with Section 9(a)(2) of the Federal Advisory Committee Act of 1972 (Pub. L. 920463). The Bureau of Land Management (BLM) Science Advisory Board will meet on Monday, October 5, 1998, beginning at 8:00 a.m. The meeting will be held at the U.S. Geological Survey (USGS) National Center, 12201 Sunrise Valley Drive, Room 7A413, Reston, Virginia. The agenda for the meeting is as follows:

8:00 am

Welcome, Introductions

8:05 am

General discussion by Science Advisory Board

9:00 am

Update of activities since last meeting Developing a long-term research/monitoring strategy

9:30 am

Overview of Canyon Country Ecosystems Research

10:15 am

Review of National Science Foundation's Long-term Ecological Research program

11:00 am

Discussion of next steps for development of long-term research and monitoring strategy

12:00 noon

Working Lunch

12:30 pm

Overview of USGS-Biological Resources Division (BRD)

1:30 pm

Coordination of funding and research with USGS-BRD

2:00 pm

Example of multi-year studies on public land

2:30 pm

How to better utilize USGS-BRD assistance to BLM

3:00 pm

Opportunity for public comments

FOR FURTHER INFORMATION CONTACT: Christine Jauhola, Bureau of Land Management, 1849 C Street NW, LSB–204, Washington, DC 20240. 202–452–7761.

Dated: August 28, 1998.

Christine A. Jauhola,

Group Manager, Fish, Wildlife and Forests Group.

[FR Doc. 98–23751 Filed 9–2–98; 8:45 am]

BILLING CODE 4310–84–P

DEPARTMENT OF THE INTERIOR

Bureau of Land Management

[AZ–020–08–1430–01; AZA–29639, AZA–19224 and AZA–30327]

Notice of Realty Action; Termination of Classification and Opening Lands to Entry in Maricopa and Pinal Counties; Non Competitive Sale of Public Land in Pinal County, Arizona

AGENCY: Bureau of Land Management, Interior.

ACTION: Notice.

SUMMARY: This notice will open 221.01 acres to location and entry under the public lands laws and the general mining laws. This notice will segregate 40.35 acres and be offered for direct sale.

EFFECTIVE DATE: September 3, 1998.

SUPPLEMENTARY INFORMATION: The following described lands were classified and segregated either on June 26, 1984 or June 3, 1996 under the provisions of the Recreation and Public Purposes (R&PP) Act, as amended (43 U.S.C. 869 et seq.). The R&PP classification is no longer needed for the following described lands:

Gila and Salt River Meridian, Arizona

T. 1 N., R. 8 E.,
Sec. 1, Lots 35, 37 and 38;
Sec. 2, SE¼SE¼NE¼NE¼SE¼, E½NE¼SE¼NE¼SE¼, NE¼SE¼SE¼NE¼SE¼.

Containing approximately 40.35 acres, more or less.

T. 7 N., R. 4 W.,
Sec. 5, Lots 2 and 3,
Sec. 5, SW¼NE¼, SE¼NW¼, E½SW¼NW¼.

Containing approximately 180.66 acres, more or less.

The following described land has been found suitable for direct sale under Section 203 of the Federal Land Policy and Management Act of 1976 (90 Stat. 2750, 43 U.S.C. 1713), at not less than the estimated fair market value of $150,000. The land will not be offered for sale until at least 60 days after the date of this notice.

Gila and Salt River Meridian, Arizona

T. 1 N., R. 8 E.,
Sec. 1, Lots 35, 37 and 38;
Sec. 2, SE¼SE¼NE¼NE¼SE¼, E½NE¼SE¼NE¼SE¼, NE¼SE¼SE¼NE¼SE¼.

Containing approximately 40.35 acres, more or less.

The land described is hereby segregated from appropriation under the public land laws, including the mining laws, pending disposition of this action

or 270 days from the date of publication of this notice, whichever occurs first.

This land is being offered by direct sale to Goldfield Ghost Town. It has been determined that the subject parcel contains known mineral value for locatable minerals; therefore, the locatable mineral interests will not be conveyed, however, leasable and salable mineral interests may be conveyed simultaneously. Acceptance of the direct sale offer will qualify the purchaser to make application for conveyance of the leasable and salable mineral interests.

The patent, when issued, will contain certain reservations to the United States and will be subject to valid existing rights. Detailed information concerning these reservations as well as specific conditions of the sale are available for review at the Phoenix Field Office, Bureau of Land Management, 2015 W. Deer Valley Road, Phoenix, Arizona 85027.

For a period of 45 days from the date of publication of this notice in the **Federal Register**, interested parties may submit comments to the Field Manager, Phoenix Field Office, at the above address. In the absence of timely objections, this proposal shall become the final determination of the Department of the Interior.

FOR FURTHER INFORMATION CONTACT: Jim Andersen, Realty Specialist, Phoenix Field Office, U.S. Bureau of Land Management, 2015 West Deer Valley Road, Phoenix, Arizona 85027; telephone (602) 580–5570.

Dated: August 28, 1998.

MarLynn Spears,

Assistant Field Manager, Lands and Minerals.

[FR Doc. 98–23737 Filed 9–2–98; 8:45 am]

BILLING CODE 4310–32–M

DEPARTMENT OF THE INTERIOR

Bureau of Land Management

[CA–930–5410–00–B100; CACA 39570]

Conveyance of Mineral Interests in California

AGENCY: Bureau of Land Management, Interior.

ACTION: Notice of Segregation.

SUMMARY: The private land described in this notice, aggregating 1,180.15 acres, is segregated and made unavailable for filings under the general mining laws and the mineral leasing laws to determine its suitability for conveyance of the reserved mineral interest pursuant to section 209 of the Federal Land Policy and Management Act of October 21, 1976. The mineral interests will be conveyed in whole or in part upon favorable mineral examination. The purpose is to allow consolidation of surface and subsurface of minerals ownership where there are no known mineral values or in those instances where the reservation interferes with or precludes appropriate nonmineral development and such development is a more beneficial use of the land than the mineral development.

FOR FURTHER INFORMATION CONTACT: Kathy Gary, California State Office, 2135 Butano Way, Sacramento, California 95825, (916) 978–4677.

SUPPLEMENTARY INFORMATION:

Serial No. CACA 39570

T. 15 S., R. 5 E., Mount Diablo Meridian
Sec. 12, lot 1–3, 6–8;
Sec. 13, lot 1, 2, 7, 8 and 9, N½SE¼
T. 15 S., R 6 E., Mount Diablo Meridian
Sec. 7, lots 3 and 4, SE¼NW¼, W½SE¼;
Sec. 18, lot 1, 2, 3, NE¼NW¼, NW¼NE¼, SE¼NW¼.

Counties—Monterey and San Benito.
Minerals Reservation—All coal and other minerals.

Upon publication of this Notice of Segregation in the **Federal Register** as provided in 43 CFR 2720.1–1(b), the mineral interests owned by the United States in the private lands covered by the application shall be segregated to the extent that they will not be subject to appropriation under the mining and mineral leasing laws. The segregative effect of the application shall terminate by publication of an opening order in the **Federal Register** specifying the date and time of opening; upon issuance of a patent or other document of conveyance to such mineral interest; or two years from the date of publication of this notice, whichever occurs first.

David Mcilnay,

Chief, Branch of Lands.

[FR Doc. 98–23735 Filed 9–2–98; 8:45 am]

BILLING CODE 4310–40–P

DEPARTMENT OF THE INTERIOR

Bureau of Land Management

[AZ–050–08–1210–04; 1617]

Arizona: Intent to Prepare a Resource Management Plan Amendment (Wild Horse and Burro Herd Management Area) and Environmental Assessment

AGENCY: Bureau of Land Management, Interior.

ACTION: Extension of Issue Identification Period for Notice of Intent to Prepare a Resource Management Plan Amendment/Environmental Assessment and Invitation to Participate in the Identification of Issues; Yuma Field Office, AZ.

SUMMARY: The Bureau of Land Management (BLM), Yuma Field Office, is preparing an Amendment/Environmental Assessment to the Yuma District Resource Management Plan to revise wild horse and burro management provisions.

The proposed Amendment would update management provisions for the Cibola-Trigo Herd Management Area in conformance with the Wild Free-Roaming Horse and Burro Act, as amended, (16 U.S.C. 1331–1340) 1994. Under the proposed Amendment, horses and burros would be managed to maintain an appropriate management level that will provide for a thriving natural ecological balance within the Cibola-Trigo Herd Management Area south of Interstate 10 and west of the impact area from the Yuma Proving Ground firing range located near Highway 95, at the southern portion of the military reservation.

DATES: The comment period for the identification of issues related to the proposed Amendment has been extended for an additional 30 days and the comment period will end on September 18, 1998.

ADDRESSES: Send comments to: Ron Morfin, BLM Yuma Field Office, 2555 Gila Ridge Road, Yuma, Arizona 85365.

FOR FURTHER INFORMATION CONTACT: Ron Morfin, Planning Team Leader, or Roger Oyler, Wild Horse and Burro Specialist, Yuma Field Office, Yuma, Arizona. Telephone (520) 317–3200.

SUPPLEMENTARY INFORMATION: The Notice of Intent to Prepare a Resource Management Plan Amendment was initially published in the **Federal Register**, Vol. 63. No. 138 on July 20, 1998. The BLM Yuma Field Office is currently coordinating efforts with the U.S. Fish and Wildlife Service, U.S. Army Yuma Proving Ground, and Arizona Game and Fish Department to develop a cooperative management plan for lands and resources contained within the Cibola-Trigo Wild Horse and Burro Herd Management Area through an interdisciplinary planning team. Considering other land and resource values and multiple uses and to provide for a thriving natural ecological balance, management objectives and direction will be proposed for wild horse and burro herds through this effort to reach and maintain the appropriate management level as established by the Cibola-Trigo Herd Management Area Plan. National BLM policies and guidance at 43 CFR 4700 require that management direction affecting wild

horses and burros shall be established through the Land Use Planning Process pursuant to 43 CFR 1600.

Issues to be addressed include: the presence of burros at impact areas from a munitions research and development firing range; management of animals outside of the herd area; management of the current horse and burro herd to reach and maintain an appropriate management level; provisions for refining forage utilization monitoring protocols; and the use of new technologies to monitor herd size.

Documents relevant to the planning process will be available for public review at the BLM Yuma Field Office, 2555 Gila Ridge Road, Yuma, Arizona.

This notice is published under the authority found in 43 CFR 1610.2(c).

Dated: August 27, 1998.

Gail Acheson,

Field Manager.

[FR Doc. 98–23801 Filed 9–2–98; 8:45 am]

BILLING CODE 4310–32–M

DEPARTMENT OF THE INTERIOR

Bureau of Land Management

[NM–952–08–1420–00]

Notice of Filing of Plat of Survey; New Mexico

AGENCY: Bureau of Land Management, Interior.

ACTION: Notice.

SUMMARY: The plats of survey described below will be officially filed in the New Mexico State Office, Bureau of Land Management, Santa Fe, New Mexico, on September 25, 1998.

New Mexico Principal Meridian, New Mexico:

Tp. 16 N., R. 8 E., accepted June 16, 1998, for Group 827 NM; T. 21 N., Rs. 7 & 8 E., accepted July 23, 1998, for Group 948 NM; T. 20 N., R. 13 E., accepted June 12, 1998, for Group 909 NM; T. 31 N., R. 17 W., accepted June 9, 1998, for Group 922 NM; T. 17 N., R. 8 E., accepted June 25, 1998, for Group 953 NM; T. 13 N., Rs. 6 and 7 E., and T. 14 N., R. 6 E., accepted July 22, 1998, for Group 956 NM; T. 29 S., R. 4 E., Supplemental Plat, accepted June 12, 1998, NM; and the Tigua Indian Reservation, accepted June 12, 1998, for Group 4 Texas.

If a protest against a survey, as shown on any of the above plats is received prior to the date of official filing, the filing will be stayed pending consideration of the protest. A plat will not be officially filed until the day after all protests have been dismissed and become final or appeals from the dismissal affirmed.

A person or party who wishes to protest against any of these surveys must file a written protest with the NM State Director, Bureau of Land Management, stating that they wish to protest.

A statement of reasons for a protest may be filed with the notice of protest to the State Director, or the statement of reasons must be filed with the State Director within thirty (30) days after the protest is filed.

The above-listed plats represent dependent resurveys, surveys, and subdivisions.

These plats will be in the New Mexico State Office, Bureau of Land Management, P.O. Box 27115, Santa Fe, New Mexico 87502–0115. Copies may be obtained from this office upon payment of $1.10 per sheet.

Dated: August 25, 1998.

John P. Bennett,

Chief Cadastral Surveyor for New Mexico.

[FR Doc. 98–23695 Filed 9–2–98; 8:45 am]

BILLING CODE 4310–FB–M

DEPARTMENT OF THE INTERIOR

Minerals Management Service

Announcement of Minerals Management Service Meeting on Oil Royalty-In-Kind Pilot Program in Wyoming

AGENCY: Minerals Management Service, Interior.

ACTION: Notice of meeting.

SUMMARY: The Minerals Management Service (MMS) will hold a half-day meeting with successful bidders under MMS's July 1, 1998, Invitation for Bids (IFB) on royalty-in-kind (RIK) oil produced from Federal leases in Wyoming and with the lessees and operators of properties successfully bid on. The purpose of the meeting is to discuss issues involved in implementing sales of Federal crude oil production to be taken as royalty-in-kind and sold under contracts resulting from the IFB.

DATES: The meeting will be held on September 14, 1998, from 1:00 p.m. until 5:00 p.m., Mountain time.

ADDRESSES: The meeting will be held at the Wyoming Oil and Gas Commission Building, 777 West First Street, Casper, Wyoming.

FOR FURTHER INFORMATION CONTACT: Mr. Bonn J. Macy, Minerals Management Service, 1849 C Street, NW, MS 4230, Washington, D.C. 20240; telephone number (202) 208–3827; fax (202) 208–3918; e-mail Bonn.Macy@mms.gov; or Mr. Robert Kronebusch of MMS (the Contracting Officer's Technical Representative), P.O. Box 25165, MS 9200, Denver, CO 80225–0165, telephone number (303) 275–7113; fax (303) 275–7124; e-mail Robert.Kronebusch@mms.gov.

COMMENTS: Written comments on the meetings or the issues discussed below should be addressed to Mr. Bonn J. Macy at the address given in the **FOR FURTHER INFORMATION** section.

SUPPLEMENTARY INFORMATION: The subject of this Notice is the continuation of MMS's planning process for the oil RIK pilot in Wyoming, one of three RIK pilot programs MMS is developing based on the recommendations in our 1997 RIK Feasibility Study. The objective of the Wyoming crude oil pilot program, as with all three pilots, is to test the effectiveness of the RIK concept for collecting Federal oil and gas royalties. MMS seeks to produce an RIK structure that reduces the administrative burden of royalty collection for both industry and government without creating a negative impact on Federal royalty revenues shared, in some cases, with States.

Operators of Federal leases in Wyoming that were successfully bid on have been directed to deliver royalty volumes in-kind for affected leases and associated communitization/unit agreements. For all other leases or agreements, payors will continue paying royalties based on current requirements.

Topics to be discussed at the meeting are:

1. Overall framework and phases of the Wyoming pilot.
2. Intent of the pilot.
3. Operator responsibilities:
   - ► Reporting.
   - ► Imbalance procedures.
   - ► Communication with purchasers.
   - ► Verification of royalty volumes.
   - ► Special considerations regarding trucked volumes.
   - ► Project termination and next phases of the pilot.
4. Purchaser responsibilities:
   - ► 100% takes of all royalty volumes delivered.
   - ► Communication with operator.
   - ► Reporting.
5. Question and Answer Period.

MMS has notified operators of affected properties and successful bidders of this meeting. If you are the operator or lessee of an affected property, or are a successful bidder under the July 1, 1998, IFB on crude oil produced from Federal leases in

Wyoming, you are urged to attend or send representative(s) to the September 14, 1998, meeting to address these issues at the location provided under **ADDRESSES** in this Notice.

Dated: August 31, 1998.

Walter D. Cruickshank,

Associate Director for Policy and Management Improvement.

[FR Doc. 98–23807 Filed 9–2–98; 8:45 am]

BILLING CODE 4310–MR–U

DEPARTMENT OF THE INTERIOR

Minerals Management Service

Electronic Commerce in the Minerals Management Service

AGENCY: Minerals Management Service, Interior.

ACTION: Notice of an electronic commerce presentation.

SUMMARY: The Minerals Management Service (MMS) in conjunction with other Federal and State regulatory agencies is participating in an Electronic Commerce (EC) presentation in Austin, Texas, on October 2, 1998. This presentation will assist those reporters or individuals considering EC implementation or pilot testing with MMS.

DATES: The EC presentation is Friday, October 2, 1998.

LOCATION: Renaissance Austin Hotel, 9721 Arboretum Boulevard, Austin, Texas 78759, telephone number: (512) 343–2626.

The Renaissance Austin Hotel is located near the intersection of Loop 360 and Highway 183. From I–35, take the Highway 183/Research Boulevard North exit and proceed four miles to Great Hills Trail. The Renaissance Austin Hotel is fifteen minutes from downtown Austin.

FOR FURTHER INFORMATION CONTACT: Mr. Timothy Allard, Systems Management Division, Royalty Management Program, Minerals Management Service, P. O. Box 25165, MS 3140, Denver, Colorado 80225–0165, telephone numbers (800) 619–4593, and (303) 275–7007, fax number (303) 275–7099, e-mail timothy.allard@mms.gov or Mr. Stephen Adams, Information Technology Division, Offshore Minerals Management, Minerals Management Service, 1201 Elmwood Park Blvd., MS 4520, Jefferson, Louisiana 70123, telephone number (504) 731–3033, fax number (504) 731–3004, e-mail stephen.adams@mms.gov.

SUPPLEMENTARY INFORMATION: MMS is participating in an EC presentation offered at no cost to companies and interested parties that are considering EC implementation or pilot testing of regulatory reports. The presentation will be held in conjunction with the American Petroleum Institute (API), Petroleum Industry Data Exchange (PIDX), Electronic Commerce Conference and Trade Show in Austin, Texas. If you plan to attend the API PIDX Electronic Commerce Conference and Trade Show scheduled for September 28, through October 1, 1998, a registration fee may apply. MMS instructors are employees of the Royalty Management Program, Systems Management Division and the Offshore Minerals Management, Information Technology Division.

Agenda

Session Times: 9:00 a.m.–3:00 p.m.

Subject: EC activities and capabilities of various regulatory agencies. Agencies will discuss EC reporting options, projects, future directions, and implementation handbooks. Agencies will solicit feedback from those companies that attend regarding preferred EC practices.

Agencies Participating Include

Minerals Management Service
Bureau of Land Management
Alaska Department of Natural Resources, Division of Oil and Gas
ONGARD Service Center of the State of New Mexico
Railroad Commission of Texas

If you plan to attend the EC presentation, please leave a message for Tim Allard or Stephen Adams at the telephone, and FAX numbers, or e-mail address in the information contact section of this notice no later than September 25, 1998.

Dated: August 28, 1998.

Lucy Querques Denett,

Associate Director for Royalty Management.

[FR Doc. 98–23755 Filed 9–2–98; 8:45 am]

BILLING CODE 4310–MR–P

DEPARTMENT OF JUSTICE

Notice of Consent Decree Under the Comprehensive Environmental Response, Compensation, and Liability Act

Notice is hereby given that a consent decree in *United States* v. *BFX Hospitality Group, Inc.*, Civil Action No. 98–CV–1297 TJM GLS (N.D.N.Y.) was lodged with the United States District Court for the Northern District of New York on August 11, 1998.

The proposed consent decree resolves claims asserted by the United States, on behalf of the U.S. Environmental Protection Agency (''EPA''), against BFX Hospitality Group, Inc. (''Settling Defendant'') under Sections 106 and 107 of the Comprehensive Environmental Response, Compensation, and Liability Act (''CERCLA''), 42 U.S.C. §§ 9606, 9607. The claims sought to recover past and future response costs and to obtain an order requiring the Settling Defendant to implement the selected remedy for Operable Unit One at the Robintech Inc./National Pipe Co. Superfund Site (''Site'') in the Town of Vestal, New York. The United States alleged that, under Section 107(a) of CERCLA, 42 U.S.C. 9607(a), BFX Hospitality Group, Inc., is liable as the current owner of the Site and an owner and operator of the Site at the time of the disposal or release of hazardous substances.

The proposed Consent Decree requires the Settling Defendant to implement the selected remedy for the Site at an estimated cost of $3 million. The United States will be reimbursed by the Settling Defendant for $550,000 of past response costs. The Settling Defendants will also pay $600,000 of EPA's oversight costs, and EPA's future response costs associated with the Site.

The Department of Justice will accept written comments relating to the proposed consent decree for thirty (30) days from the date of publication of this notice. Please address comments to the Assistant Attorney General, Environment and Natural Resources Division, Department of Justice, P.O. Box 7611, Ben Franklin Station, Washington, D.C. 20044 and refer to *United States* v. *BFX Hospitality Group, Inc.* (N.D.N.Y.), DJ #90–11–2–764.

Copies of the proposed consent decree may be examined at the office of the United States Attorney for the Northern District of New York, 45 Broadway, Room 231, Albany NY 12207; at the U.S. Environmental Protection Agency, Region II, 290 Broadway, New York, NY 10007–1866; and at the Consent Decree Library, 1120 G Street, N.W., 4th Floor, Washington, D.C. 20005, (202) 624–0892. A copy of the consent decree may also be obtained in person or by mail at the Consent Decree Library, 1120 G Street, N.W., 4th Floor, Washington, D.C. 20005. When requesting a copy of the consent decree by mail, please enclose a check in the amount of $60.75 (twenty–five cents per page

reproduction costs) payable to the ''Consent Decree Library.''

Joel M. Gross,

Chief, Environmental Enforcement Section, Environment and Natural Resources Division, U.S. Department of Justice.

[FR Doc. 98–23803 Filed 9–2–98; 8:45 am]

BILLING CODE 4410–15–M

DEPARTMENT OF JUSTICE

Notice of Lodging of Consent Decree Pursuant to the Comprehensive Environmental Response, Compensation and Liability Act (''CERCLA'')

Notice is hereby given that a proposed Consent Decree (''Decree'') in *United States* v. *Pacific Hide and Fur Depot, Inc., et al*, Civil Action No. 83–4052, was lodged on July 31, 1998, with the United States District Court for the District of Idaho.

The complaint and amended complaints filed in the above-referenced matter allege that defendants Pacific Hide and Fur Depot, Inc., William N. McCarty, Michael McCarty, Terry McCarty, Sherry McCarty Christianson, Richard McCarty, Dayna McCarty Sanna, McCarty's Inc., Pacific Fruit Express Company and Union Pacific Railroad Company (together ''Settling Defendants''), are jointly and severally liable for the United States' response costs at the McCarty's/Pacific Hide and Fur Superfund Site (''Site'') in Pocatello, Idaho, pursuant to Section 107(a) of CERCLA, 42 U.S.C. 9607(a).

The Site is comprised of 17 acres located in northwest Pocatello, Idaho that as used as part of a gravel mining operation as early as 1949, and as a metal salvaging yard beginning in the late 1950s and continuing until approximately 1979. Metal was salvaged at the Site from many sources, including transformers, which were stored in and around a gravel pit (''Pit'') in the southwest corner of the Site. Lead from lead-acid batteries was also salvaged at the Site. As a result of these activities, the Site was contaminated with lead and polychlorinated biphenyls (''PCBs''), which are hazardous substances within the meaning of CERCLA, and the United States incurred response costs responding to the release or threat of release of these hazardous substances at the Site.

Under the proposed Decree, Settling Defendants shall pay the United States approximately $2.563 million towards the United States' approximately $5.78 million in past costs at the Site. Settling Defendants also agree to comply with all provisions of a Unilateral Administrative Order (''UAO'') issued by the U.S. Environmental Protection Agency (''EPA'') on July 12, 1996 (and amended on April 28, 1998), which includes the requirement that Settling Defendants perform portions of the remedial work at the Site and reimburse EPA for the costs of overseeing those portions of the remedial work. Settling Defendants have already completed the remedial work required under the July, 1996 UAO. Although EPA has not yet tabulated the cost of overseeing Settling Defendants' work under the UAO, the current estimate of these costs is $200,000. Finally, Settling Defendants agree to place permanent deed restrictions prohibiting future excavation in a small area of the Site that may contain subsurface contamination. In exchange, the Decree provides Settling Defendants a covenant not to sue under Sections 106 and 107 of CERCLA, 42 U.S.C. 9606–9607.

Sampling shows that the entire Site is now cleaned to residential levels.

The Department of Justice will receive, for a period of thirty (30) days from the date of this publication, comments relating to the proposed consent decree. Comments should be addressed to the Assistant Attorney General for the Environment and Natural Resources Division, Department of Justice, Washington, D.C. 20530, and should refer to *United States* v. *Pacific Hide and Fur Depot, Inc., et al*, DOJ Ref. #90–11–2–47.

The proposed consent decree may be examined at the office of the United States Attorney, District of Idaho, P.O. Box 32, Boise, Idaho, 83707, (208) 334–1211; the Region X Office of the Environmental Protection Agency, 1200 Sixth Avenue, Seattle, Washington, 98101, (206) 553–1796; and at the Consent Decree Library, 1120 G Street, N.W., 3rd Floor, Washington, D.C. 20005, (202) 624–0892. A copy of the proposed consent decree may be obtained in person or by mail from the Consent Decree Library, 1120 G Street, N.W., 3rd Floor, Washington, D.C. 20005. In requesting a copy of the Decree, *with all attachments,* please refer to the referenced case and enclose a check in the amount of $65.25 (25 cents per page reproduction costs), payable to the Consent Decree Library. In requesting a copy of the Decree *without the attachments,* please enclose a check in the amount of $10.50.

Joel M. Gross,

Chief, Environmental Enforcement Section, Environmental and Natural Resources Division.

[FR Doc. 98–23802 Filed 9–2–98; 8:45 am]

BILLING CODE 4410–15–M

DEPARTMENT OF JUSTICE

Drug Enforcement Administration

Manufacturer of Controlled Substances; Notice of Registration

By Notice dated March 16, 1998, and published in the **Federal Register** on March 27, 1998, (63 FR 14963), Ganes Chemicals, Inc., Industrial Park Road, Pennsville, New Jersey 08070, made application by renewal to the Drug Enforcement Administration (DEA) to be registered as a bulk manufacturer of the basic classes of controlled substances listed below:

Drug	Schedule
Methylphenidate (1724)	II
Amobarbital (2125)	II
Pentobarbital (2270)	II
Secobarbital (2315)	II
Glutethimide (2550)	II
Methadone (9250)	II
Methadone-intermediate (9254)	II
Dextropropoxyphene, bulk (non-dosage forms) (9273).	II

The firm plans to manufacture the listed controlled substances for distribution as bulk products to its customers.

DEA has considered the factors in 21 U.S.C. 823(a) and determined that the registration of Ganes Chemicals, Inc. to manufacture the listed controlled substances is consistent with the public interest at this time. Therefore, pursuant to 21 U.S.C. 823 and 28 CFR 0.100 and 0.104, the Deputy Assistant Administrator, Office of Diversion Control, hereby orders that the application submitted by the above firm for registration as a bulk manufacturer of the basic classes of controlled substances listed above is granted.

Dated: June 23, 1998.

John H. King,

Deputy Assistant Administrator, Office of Diversion Control, Drug Enforcement Administration.

[FR Doc. 98–23692 Filed 9–2–98; 8:45 am]

BILLING CODE 4410–09–M

DEPARTMENT OF JUSTICE

Drug Enforcement Administration

Manufacturer of Controlled Substances; Notice of Application

Pursuant to Section 1301.33(a) of Title 21 of the Code of Federal Regulations (CFR), this is notice that in a letter dated February 5, 1998, Organix, Inc., 240 Salem Street, Woburn, Massachusetts

01801, made application to the Drug Enforcement Administration (DEA) for registration as a bulk manufacturer of cocaine (9041), a basic class of controlled substance in Schedule II.

The firm plans to manufacture a derivative of cocaine in gram quantities for validation of synthetic procedures.

Any other such applicant and any person who is presently registered with DEA to manufacture such substances may file comments or objections to the issuance of the proposed registration.

Any such comments or objections may be addressed, in quintuplicate, to the Deputy Assistant Administrator, Office of Diversion Control, Drug Enforcement Administration, United States Department of Justice, Washington, D.C. 20537, Attention: DEA Federal Register Representative (CCR), and must be filed no later than November 2, 1998.

Dated: June 15, 1998.

John H. King,

Deputy Assistant Administrator, Office of Diversion Control, Drug Enforcement Administration.

[FR Doc. 98–23693 Filed 9–2–98; 8:45 am]

BILLING CODE 4410–09–M

DEPARTMENT OF JUSTICE

Drug Enforcement Administration

Manufacturer of Controlled Substances; Notice of Registration

By Notice dated January 21, 1998, and published in the **Federal Register** on February 12, 1998, (63 FR 7182), Roche Diagnostic Systems, Inc., 1080 U.S. Highway 202, Somerville, New Jersey 08876–3771, made application by letter to the Drug Enforcement Administration (DEA) to be registered as a bulk manufacturer of ecgonine (9180), a basic class of controlled substance listed in Schedule II.

The firm plans to manufacture small quantities of ecgonine which will be further converted into derivatives for incorporation in drug of abuse detection kits.

DEA has considered the factors in Title 21, United States Code, Section 823(a) and determined that the registration of Roche Diagnostic Systems, Inc. to manufacture ecgonine is consistent with the public interest at this time. Therefore, pursuant to 21 U.S.C. 823 and 28 CFR 0.100 and 0.104, the Deputy Assistant Administrator, Office of Diversion Control, hereby orders that the application submitted by the above firm for registration as a bulk manufacturer of the basic class of controlled substance listed above is granted.

Dated: June 23, 1998.

John H. King,

Deputy Assistant Administrator, Office of Diversion Control, Drug Enforcement Administration.

[FR Doc. 98–23691 Filed 9–2–98; 8:45 am]

BILLING CODE 4410–09–M

DEPARTMENT OF JUSTICE

Office of Justice Programs

Agency Information Collection Activities: Proposed Collection; Comment Request

ACTION: Notice of information collection under review; Extension of a currently approved collection; Drug Court Grantee Data Collection Survey.

The Department of Justice, Office of Justice Programs has submitted the following information collection request for review and clearance in accordance with the Paperwork Reduction Act of 1995. This proposed information collection is published to obtain comments from the public and affected agencies. Comments are encouraged and will be accepted for ''sixty days'' until November 2, 1998.

If you have additional comments, suggestions, or need a copy of the proposed information collection instrument with instructions or additional information, please contact Marilyn Roberts, 202–616–5001, Office of Justice Programs, United States Department of Justice, 810 7th Street, NW., Washington, DC 20531.

Written comments and suggestions from the public and affected agencies concerning the proposed collection of information should address one or more of the following four points:

(1) Evaluate whether the proposed collection of information is necessary for the proper performance of the function of the agency, including whether the information will have practical utility;

(2) Evaluate the accuracy of the agency's estimate of the burden of the proposed collection of information, including the validity of the methodology and assumptions used;

(3) Enhance the quality, utility, and clarity of the information to be collected; and

(4) Minimize the burden of the collection of information on those who are to respond, including through the use of appropriate automated, electronic, mechanical, or other technological collection techniques or other forms of information technology, e.g., permitting electronic submission of responses.

Overview of this information:

(1) *Type of information collection:* Extension of a currently approved collection.

(2) *The title of the form/collection:* Drug Court Grantee Data Collection Survey.

(3) *The agency form number, if any, and the applicable component of the Department sponsoring the collection:* Form number = none. Office of Justice Programs, United States Department of Justice.

(4) *Affected public who will be asked or required to respond, as well as a brief abstract:* Primary: Federal Government, State, Local or Tribal. Other: None. This survey will assist in the National evaluation of Drug Courts. The data to be collected will assist in determining the effectiveness of these grants and the information will be shared within the drug court field to improve program quality.

(5) *An estimate of the total number of respondents and the amount of time estimated for an average respondent to respond/reply:* It is estimated that 300 respondents will complete a 2 hour survey semi-annually.

(6) An estimate of the total public burden (in hours) associated with the collection: 600 annual burden hours.

If additional information is required contact: Mr. Robert B. Briggs, Clearance Officer, United States Department of Justice, Information Management and Security Staff, Justice Management Division, Suite 850, Washington Center, 1001 G Street, N.W., Washington, DC 20530.

Dated: August 27, 1998.

Robert B. Briggs,

Department Clearance Officer, United States Department of Justice.

[FR Doc. 98–23746 Filed 9–2–98; 8:45 am]

BILLING CODE 4410–18–M

DEPARTMENT OF LABOR

Occupational Safety and Health Administration

Federal Advisory Council on Occupational Safety and Health; Notice of Meeting

Notice is hereby given of the date and location of the next meeting of the Federal Advisory Council on Occupational Safety and Health (FACOSH), established under Section 1–5 of Executive Order 12196 of February 26, 1980, published in the **Federal Register**, February 27, 1980 (45

FR 1179). FACOSH will meet on September 24, 1998, starting at 2:00 p.m., in Room S–4215 A&B, of the Francis Perkins Department of Labor Building, 200 Constitution Avenue, NW, Washington, DC 20210. The meeting will adjourn at approximately 4:30 p.m., and will be open to the public.

Agenda items will include:

I. Call to Order

II. Vision for FACOSH

III. Federal Worker 2000

IV. Federal Agency Occupational Safety and Health Programs Partnerships and Evaluations

V. Department of Energy's Zero Tolerance for Serious Accidents that Results in Life-Threatening Injuries or Major Environmental Contamination

VI. 53rd Annual Federal Safety and Health Conference in Los Angeles

VII. Status of Annual Reports for FY 1997

VIII. New Business

IX. Adjournment

Written data, views or comments may be submitted, preferably with 20 copies, to the Office of Federal Agency Programs, at the address provided below. All such submissions, received by September 16, 1998, will be provided to the members of the Council and will be included in the record of the meeting. Anyone wishing to make an oral presentation should notify the Office of Federal Agency Programs by close of business September 18, 1998. The request should state the amount of time desired, the capacity in which the person will appear and a brief outline of the content of the presentation. Persons who request the opportunity to address the Advisory Council may be allowed to speak, as time permits, at the discretion of the Chairperson of the Advisory Council. Individuals with disabilities who wish to attend the meeting should contact John E. Plummer at the address indicated below, if special accommodations are needed.

For additional information please contact John E. Plummer, Director, Office of Federal Agency Programs, U.S. Department of Labor, Occupational Safety and Health Administration, Room N3112, 200 Constitution Avenue, NW, Washington, D.C. 20210, telephone: (202) 219–9329. An official record of the meeting will be available for public inspection at the Office of Federal Agency Programs.

Signed at Washington, DC, this 28th day of August 1998.

Charles N. Jeffress,

Assistant Secretary of Labor for Occupational Safety and Health.

[FR Doc. 98–23705 Filed 9–2–98; 8:45 am]

BILLING CODE 4510–26–M

INTERNATIONAL BOUNDARY AND WATER COMMISSION, UNITED STATES AND MEXICO

United States Section; Notice of Intent To Prepare an Environmental Impact Statement for the El Paso-Las Cruces Regional Sustainable Water Project Sierra and Doña Ana Counties, New Mexico and El Paso County, TX

AGENCY: United States Section, International Boundary and Water Commission, United States and Mexico.

ACTION: Notice of intent to prepare an Environmental Impact Statement (EIS).

SUMMARY: This notice advises the public that pursuant to section 102(2)(c) of the National Environmental Policy Act of 1969, as amended, the United States Section, International Boundary and Water Commission (USIBWC) in conjunction with the El Paso Water Utilities/Public Service Board (EPWU/PSB) proposes to gather information necessary to analyze and evaluate the impacts of the proposed El Paso-Las Cruces Regional Sustainable Water Project in Sierra and Doña Ana counties, New Mexico and El Paso County, Texas and prepare an EIS to document those effects. This notice is being provided as required by the Council on Environmental Quality Regulations (40 CFR 1501.7) and the USIBWC's Operational Procedures for Implementing Section 102 of the National Environmental Policy Act of 1969, published in the **Federal Register** September 2, 1981 (46 FR 44083–44094) to obtain suggestions and information from other agencies and the public on the scope of issues to be addressed in the EIS. Public meetings and workshops will be held to obtain community input to ensure all concerns are identified and addressed in the EIS.

FOR FURTHER INFORMATION CONTACT: Mr. Douglas Echlin, Environmental Protection Specialist, Environmental Management Division, USIBWC, 4171 North Mesa Street, C–310, El Paso, Texas 79902 or call 915/832–4150 extension 2. E-mail: dougechlin@ibwc.state.gov.

SUPPLEMENTARY INFORMATION:

1. Proposed Action

One of the most important challenges the El Paso-Las Cruces region faces is the long-term supply of drinking water. Rapid growth within the region has resulted in greater use of the local aquifers, a major regional source of drinking water, which are now experiencing net depletions. The New Mexico-Texas Water Commission (Commission) was established in 1991 to help meet the region's water resource challenges, and the El Paso-Las Cruces Regional Sustainable Water Project was conceived.

The proposed project's primary mission is to provide a sustainable water supply for the El Paso-Las Cruces region. The overall objectives established by the Commission are: (1) improve and protect surface and ground water quality; (2) preserve the Hueco and Mesilla ground water basins; (3) implement year-round delivery of surface water which will enhance agricultural and municipal water supplies and the riverine ecosystem; (4) increase supplies through more efficient delivery, water conservation, and water treatment means; and (5) continue to meet treaty, compact, and contract requirements for water deliveries of Rio Grande Project waters.

The proposed project would provide nearly 230 million gallons per day (MGD) year-round surface water to communities and other water users in southern New Mexico and far west Texas. The communities expected to benefit from the proposed project would include but are not limited to Hatch, Las Cruces, and Anthony, New Mexico and Anthony, Canutillo, and El Paso, Texas. Surface deliveries of year-round waters would be accomplished through acquisition of agricultural water rights and conversion to municipal and industrial (M&I) uses. A series of alternative approaches have been developed that would convey the water through use of the river channel and include construction of new conveyance facilities and treatment plants, upgrading and using existing conveyance facilities and treatment plants, or a combination of these means.

2. Alternatives

The USIBWC as lead agency in conjunction with the EPWU/PSB proposes to gather information necessary for the preparation of an EIS to analyze alternatives for the proposed El Paso-Las Cruces Regional Sustainable Water Project. The EIS will consider a range of alternatives, including the no action alternative, based on issues and concerns associated with the project.

Significant issues which have been identified to be addressed in the EIS include but are not limited to impacts to water and air quality, surface and ground water resources, land use, prime and unique farmlands, public health, cultural and biological resources, threatened and endangered species, recreation, and environmental justice.

Accordingly, specific purposes were developed to focus water supply scenarios and to establish criteria to be used by decision-makers in judging the alternatives during the NEPA process. Project alternatives considered for the environmental impact studies should protect and maintain sustainability of the Mesilla aquifer, and extend the longevity of the Hueco aquifer by limiting ground water depletions and by implementing aquifer storage.

Project alternatives should provide year-round drinking water supply from the Rio Grande Project of sufficient quantity and quality to meet anticipated municipal needs. Alternatives considered in the NEPA process should meet year 2030 M&I needs of Hatch, Las Cruces, northern and southern Doña Ana County, Anthony/Canutillo area, northwest and northeast El Paso, and areas served by the Canal and expanded Jonathan Rogers Water Treatment Plants. They should also attempt to provide raw drinking water supply with total dissolved solids (TDS) less than 1,000 parts per million (ppm) and sulfates less than 300 ppm since water with higher quantities cannot be conventionally treated. Additionally, project alternatives should also protect and enhance riverine ecosystems, specifically aquatic and riparian habitats; and should facilitate the efficient conveyance of agricultural water and water conservation.

Coordination with the United States Fish and Wildlife Service will ensure compliance with the Fish and Wildlife Coordination Act and section 7 of the Endangered Species Act of 1973, as amended. Cultural resources reconnaissance for the project area will be coordinated with both the New Mexico State Historic Preservation Officer and the Texas State Historic Preservation Officer. Other federal and state agencies, as required, will also be consulted to ensure compliance with federal and state laws and regulations.

3. Scoping Process

The USIBWC and EPWU/PSB will conduct scoping meetings and workshops to obtain information on which to base alternatives to be analyzed in the NEPA process. The USIBWC is the federal lead agency in the NEPA process and development of the EIS. The United States Bureau of Reclamation and United States Fish and Wildlife Service have indicated that they will participate as cooperating agencies pursuant to 40 CFR 1501.6, to the extent possible. Other federal and state agencies may also become cooperators as they are identified during the scoping process.

Three public scoping meetings and workshops for the proposed project will be conducted from 4:00 to 7:00 p.m. MDT on Wednesday, September 16, 1998 at the Gadsden Middle School Cafeteria, 1325 West Washington, Anthony, New Mexico; on Wednesday, September 23, 1998 at the Farm and Ranch Heritage Museum, 4100 Dripping Springs Road, Las Cruces, New Mexico; and on Thursday, September 24, 1998 at Jefferson High School Cafeteria, 4700 Alameda, El Paso, Texas. Comments are encouraged to be sent to the address given in this notice and will be accepted for 60-days following the date of this notice.

The environmental review of this project will be conducted in accordance with the requirements of NEPA, CEQ Regulations (40 CFR Parts 1500–1508), other appropriate federal regulations, and the USIBWC procedures for compliance with those regulations. Copies of the EIS will be transmitted to federal and state agencies and other interested parties for comments and will be filed with the Environmental Protection Agency in accordance with 40 CFR Parts 1500–1508 and USIBWC procedures.

The USIBWC anticipates the Draft EIS will be made available to the public by March, 2000.

Dated: August 20, 1998.

William A. Wilcox, Jr.,

Legal Advisor.

[FR Doc. 98–23804 Filed 9–1–98; 8:45 am]

BILLING CODE 4710–03–P

NATIONAL AERONAUTICS AND SPACE ADMINISTRATION

[Notice (98–114)]

National Environmental Policy Act; Mars Surveyor 1998 Missions

AGENCY: National Aeronautics and Space Administration (NASA).

ACTION: Finding of no significant impact (FONSI).

SUMMARY: Pursuant to the National Environmental Policy Act (NEPA) of 1969, as amended (42 U.S.C. 4321, *et seq.*), the Council on Environmental Quality Regulations for Implementing the Procedural Provisions of NEPA (40 CFR Parts 1500–1508), and NASA policy and procedures (14 CFR Part 1216 Subpart 1216.3), NASA has made a FONSI with respect to the proposed Mars Surveyor 1998 missions, which would involve two flights to Mars. The baseline plan calls for each of the two spacecraft to be launched aboard a separate Delta II 7425 from Cape Canaveral Air Station (CCAS), Florida, between December 1998 and January 1999.

DATES: Comments on the FONSI must be provided in writing to NASA on or before October 5, 1998.

ADDRESSES: Comments in response to this FONSI should be addressed to Dr. William L. Piotrowski, NASA Headquarters, Code SD, 300 E Street SW, Washington, DC 20546. The Environmental Assessment (EA) prepared for the Mars Surveyor 1998 missions which supports this FONSI may be reviewed at the following locations:

(a) NASA Headquarters, Library, room 1J20, 300 E Street, SW, Washington, DC 20546 (202–358–0167).

(b) NASA, Spaceport USA, Room 2001, John F. Kennedy Space Center, Florida 32899. Please call Lisa Fowler beforehand at 407–867–2497 so that arrangements can be made.

(c) Jet Propulsion Laboratory, Visitors Lobby, Building 249, 4800 Oak Grove Drive, Pasadena, CA 91109 (818–354–5179).

The EA may also be examined at the following NASA locations by contacting the pertinent Freedom of Information Act Office:

(d) NASA, Ames Research Center, Moffett Field, CA 94035 (650–604–4191).

(e) NASA, Dryden Flight Research Center, Edwards, CA 93523 (805–258–2663).

(f) NASA, Goddard Space Flight Center, Greenbelt, MD 20771 (301–286–0730).

(g) NASA, Johnson Space Center, Houston, TX 77058 (281–483–8612).

(h) NASA, Langley Research Center, Hampton, VA 23665 (757–864–2497).

(i) NASA, Lewis Research Center, 21000 Brookpark Road, Cleveland, OH 44135 (216–433–2755).

(j) NASA, Marshall Space Flight Center, Huntsville, AL 35812 (256–544–5549).

(k) NASA, Stennis Space Center, MS 39529 (228–688–2164).

A limited number of copies of the EA are available, on a first request basis, by contacting Dr. William L. Piotrowski, at the address or telephone number indicated herein.

FOR FURTHER INFORMATION CONTACT: Dr. William L. Piotrowski, 202–358–0316.

SUPPLEMENTARY INFORMATION: NASA has reviewed the EA prepared for the Mars Surveyor 1998 missions and has determined that it represents an accurate and adequate analysis of the scope and level of associated environmental impacts. The EA is hereby incorporated by reference in this FONSI.

NASA is proposing to launch the Mars Surveyor 1998 missions, which would deliver a lander and an orbiter spacecraft to Mars. Current plans call for using two Delta II 7425 launch vehicles with a Star 48 upper stage to launch the two spacecraft onto Mars transfer trajectories in December 1998 and January 1999 respectively. The proposed mission design calls for the orbiter spacecraft to be placed into orbit at Mars in September 1999, and the lander spacecraft to be placed on Mars' surface in December 1999. During its mission, the orbiter would map the surface and atmosphere of Mars and serve as a communications relay for the lander mission. The lander would photograph and sample the surface of Mars near the south pole. Neither spacecraft nor the lander would carry radioactive material.

The primary scientific objectives of these missions are to search for evidence of past or present life, understand the climate and volatile history of Mars, and assess the nature and inventory of resources on Mars. These objectives are linked by the influence of water. The missions would map past and present potential water sources and the exchange between subsurface, surface and atmospheric media. While environmental impacts would be avoided by cancellation of the proposed mission, the loss of the scientific knowledge and database from carrying out the missions could be significant.

Of the reasonable launch vehicle alternatives, the Delta II 7425/Star 48 most closely matches the Mars Surveyor 1998 mission requirements, while minimizing adverse environmental impacts within the cost constraints of these missions.

Expected impacts to the human environment associated with the missions arise entirely from the normal launch of the Delta II 7425. Air emissions from the exhaust produced by the solid propellant graphite epoxy motors and liquid first stage primarily include carbon monoxide, hydrochloric acid, aluminum oxide in soluble and insoluble forms, carbon dioxide, and deluge water mixed with propellant by-products. Air impacts would be short-term and not substantial. Short-term water quality and noise impacts, as well as short-term effects on wetlands, plants, and animals, would occur in the vicinity of the launch complex. These short-term impacts are of a nature to be self-correcting, and none of these effects would be substantial. There would be no impact on threatened or endangered species or critical habitat, cultural resources, or floodplains. Accident scenarios have also been addressed and indicate no potential for substantial impacts to the human environment.

The launch vehicles' second stage would be ignited at an altitude of 118 kilometers (74 miles), which is in the ionosphere. Although the second stage would achieve orbit, its orbital decay time would fall below the limit NASA has set for orbital debris consideration. After burning its propellant to depletion, the second stage would remain in low Earth orbit (LEO) until its orbit eventually decays. The second stage is designed to burn up as it reenters Earth's atmosphere. The Mars Surveyor 1998 Project has followed the NASA guidelines regarding orbital debris and minimizing the risk for uncontrolled reentry into the Earth's atmosphere. No other impacts of environmental concern have been identified.

The level and scope of environmental impacts associated with the launch of the Delta II 7425 vehicle are well within the envelope of impacts that have been addressed in previous FONSI's concerning other launch vehicles and spacecraft. No significant new circumstances or information relevant to environmental concerns associated with the launch vehicle has been identified which would affect the earlier findings.

On the basis of the Mars Surveyor 1998 EA, NASA has determined that the environmental impacts associated with the mission would not individually or cumulatively have a significant impact on the quality of the human environment. NASA will take no final action prior to the expiration of the 30-day comment period.

Wesley T. Huntress, Jr.,

Associate Administrator for Space Science.

[FR Doc. 98–23824 Filed 9–2–98; 8:45 am]

BILLING CODE 7510–01–U

NATIONAL ARCHIVES AND RECORDS ADMINISTRATION

Records Schedules; Availability and Request for Comments

AGENCY: National Archives and Records Administration, Office of Records Services—Washington, DC.

ACTION: Notice of availability of proposed records schedules; request for comments.

SUMMARY: The National Archives and Records Administration (NARA) publishes notice at least once monthly of certain Federal agency requests for records disposition authority (records schedules). Once approved by NARA, records schedules provide mandatory instructions on what happens to records when no longer needed for current Government business. They authorize the preservation of records of continuing value in the National Archives of the United States and the destruction, after a specified period, of records lacking administrative, legal, research, or other value. Notice is published for records schedules in which agencies propose to destroy records not previously authorized for disposal or reduce the retention period of records already authorized for disposal. NARA invites public comments on such records schedules, as required by 44 U.S.C. 3303a(a).

DATES: Requests for copies must be received in writing on or before October 19, 1998. Once the appraisal of the records is completed, NARA will send a copy of the schedule. NARA staff usually prepare appraisal memorandums that contain additional information concerning the records covered by a proposed schedule. These, too, may be requested and will be provided once the appraisal is completed. Requesters will be given 30 days to submit comments.

ADDRESSES: To request a copy of any records schedule identified in this notice, write to the Life Cycle Management Division (NWML), National Archives and Records Administration (NARA), 8601 Adelphi Road, College Park, MD 20740–6001. Requests also may be transmitted by FAX to 301–713–6852 or by e-mail to records.mgt@arch2. nara.gov.

Requesters must cite the control number, which appears in parentheses after the name of the agency which submitted the schedule, and must provide a mailing address. Those who desire appraisal reports should so indicate in their request.

FOR FURTHER INFORMATION CONTACT: Michael L. Miller, Director, Modern Records Programs (NWM), National Archives and Records Administration, 8601 Adelphi Road, College Park, MD 20740–6001. Telephone: (301)713–7110. E-mail: records.mgt@arch2.nara.gov.

SUPPLEMENTARY INFORMATION: Each year Federal agencies create billions of records on paper, film, magnetic tape,

and other media. To control this accumulation, agency records managers prepare schedules proposing retention periods for records and submit these schedules for NARA approval, using the Standard Form (SF) 115, Request for Records Disposition Authority. These schedules provide for the timely transfer into the National Archives of historically valuable records and authorize the disposal of all other records after the agency no longer needs the records to conduct its business. Some schedules are comprehensive and cover all the records of an agency or one of its major subdivisions. Most schedules, however, cover records of only one office or program or a few series of records. Many of these update previously approved schedules, and some include records proposed as permanent.

No Federal records are authorized for destruction without the approval of the Archivist of the United States. This approval is granted only after a thorough consideration of their administrative use by the agency of origin, the rights of the Government and of private persons directly affected by the Government's activities, and whether or not they have historical or other value.

Besides identifying the Federal agencies and any subdivisions requesting disposition authority, this public notice lists the organizational unit(s) accumulating the records or indicates agency-wide applicability in the case of schedules that cover records that may be accumulated throughout an agency. This notice provides the control number assigned to each schedule, the total number of schedule items, and the number of temporary items (the records proposed for destruction). It also includes a brief description of the temporary records. The records schedule itself contains a full description of the records at the file unit level as well as their disposition. If NARA staff has prepared an appraisal memorandum for the schedule, it too includes information about the records. Further information about the disposition process is available on request.

Schedules Pending

1. Department of Justice, United States Marshals Service, Air Operations Group (N1–527–98–1, 14 items, 14 temporary items). Records relating to the maintenance and operation of USMS-owned aircraft used in the transportation of prisoners and deportable aliens, including aircraft maintenance instructions, correspondence, and log books.

2. Department of State (N1–76–98–1, 1 item, 1 temporary item). Duplicate copies of records of the Mixed Claims Commission, United States and Germany, 1922–1939. Records consist of minutes and awards and decisions.

3. Federal Communications Commission, Mass Media Bureau (N1–173–98–4), 1 item, 1 temporary item). Reduction in retention period for Returned Broadcast Applications, which have previously been approved for disposal. Returned Broadcast Applications are applications that have been reviewed and not accepted for official FCC filing purposes, and are subsequently returned to the sender.

4. National Imagery and Mapping Agency, Agency-wide (N1–537–98–1, 25 items, 25 temporary items). Office administrative files consisting of calendars and schedules, office inspection and survey files, reading files, position descriptions, personnel locators, and classified material accountability forms.

5. Occupational Safety and Health Review Commission, Office of the Executive Secretary (N1–455–98–1, 1 item, 1 temporary item). Audiotape recordings (cassettes) of Commission meetings attended by the Commissioners and agency legal staff to discuss particular cases. These recordings are made pursuant to instructions in the 1977 Sunshine Act, 5 U.S.C. 552b. Minutes of the Commissioner's meetings were previously approved for permanent retention.

6. Tennessee Valley Authority (N1–142–98–6, 3 items, 1 temporary item). Records created in administering four conferences, 1979–1982. Transcripts, models, studies, and papers are proposed for permanent retention.

Dated: August 27, 1998.

Michael J. Kurtz,

Assistant Archivist for Record Services—Washington, DC.

[FR Doc. 98–23812 Filed 9–2–98; 8:45 am]

BILLING CODE 7515–01–P

NATIONAL SCIENCE FOUNDATION

Special Emphasis Panel in Design, Manufacture & Industrial Innovation; Notice of Meeting

This notice is being published in accord with the Federal Advisory Committee Act (Public Law 92–463, as amended).

Name: Special Emphasis Panel in Design, Manufacture & Industrial Innovation (1194).

Date & Time: September 30, 1998; 8:30 a.m. to 5:00 p.m.

Place: National Science Foundation, 4201 Wilson Boulevard, Arlington, VA

Type of Meeting: Closed.

SBIR Program Contact Person: Cheryl Albus, Program Manager, DMII, Room 590, National Science Foundation, 4201 Wilson Blvd., Arlington, VA 22230, Telephone: (703) 306–1390.

Purpose of Meeting: To provide advice and recommendations concerning proposals submitted to NSF for financial support.

Agenda: To review and evaluate proposals submitted to the Small Business Innovation Research (SBIR) Program (topic: 7; area: Earth Science) as part of the selection process for awards.

Reason for Closing: The proposals being reviewed include information of a proprietary or confidential nature, including technical information; financial data, such as salaries, and personal information concerning individuals associated with the proposals. These matters are exempt under 5 U.S.C. 552b(c) (4) and (6) of the Government in the Sunshine Act.

Dated: August 27, 1998.

M. Rebecca Winkler,

Committee Management Officer.

[FR Doc. 98–23808 Filed 9–2–98; 8:45 am]

BILLING CODE 7555–01–M

NATIONAL SCIENCE FOUNDATION

Special Emphasis Panel in Mathematical Sciences; Notice of Meeting

In accordance with the Federal Advisory Committee Act (Pub. L. 92–463, as amended), the National Science Foundation announces the following meeting.

Name: Special Emphasis in Mathematical Sciences (1204).

Date and Time: September 24–26, 1998; 8:30 a.m. until 5:00 p.m.

Place: Room 1060, National Science Foundation, 4201 Wilson Boulevard Arlington, VA 22230.

Type of Meeting: Closed.

Contact Person: Dr. Alvin I. Thaler, Program Director, National Science Foundation, 4201 Wilson Boulevard, Arlington, VA 22230. Telephone (703) 306–1880.

Purpose of Meeting: To provide advice and recommendations concerning proposals submitted to NSF for financial support.

Agenda: To review and evaluate the Analysis Program nominations/applications as part of the selection process for awards.

Reason for Closing: The proposals being reviewed include information of a proprietary or confidential nature, including technical information; financial data, such as salaries and personal information concerning individuals associated with the proposals. These matters are exempt under 5 U.S.C. 552b(c) (4) and (6) of the Government in the Sunshine Act.

Dated: August 31, 1998.

M. Rebecca Winkler,

Committee Management Officer.

[FR Doc. 98–23809 Filed 9–2–98; 8:45 am]

BILLING CODE 7555–01–M

NUCLEAR REGULATORY COMMISSION

Regulatory Guide; Issuance, Availability

The Nuclear Regulatory Commission has issued a new guide in its Regulatory Guide Series. This series has been developed to describe and make available to the public such information as methods acceptable to the NRC staff for implementing specific parts of the Commission's regulations, techniques used by the staff in evaluating specific problems or postulated accidents, and data needed by the staff in its review of applications for permits and licenses.

Regulatory Guide 3.71, ''Nuclear Criticality Safety Standards for Fuels and Material Facilities,'' has been developed to provide guidance on procedures for preventing nuclear criticality accidents in operations involving handling, processing, storing, and transporting special nuclear material at fuels and material facilities. This guide endorses specific ANSI/ANS–8 nuclear criticality safety standards of the American National Standards Institute/American Nuclear Society for these purposes. The guide also consolidates and replaces the guidance from a number of regulatory guides, thereby withdrawing those regulatory guides. Regulatory Guide 3.71 is not intended to be used by nuclear reactor licensees.

Comments and suggestions in connection with items for inclusion in guides currently being developed or improvements in all published guides are encouraged at any time. Written comments may be submitted to the Rules and Directives Branch, Division of Administrative Services, Office of Administration, U.S. Nuclear Regulatory Commission, Washington, DC 20555.

Regulatory guides are available for inspection at the Commission's Public Document Room, 2120 L Street NW., Washington, DC. Single copies of regulatory guides may be obtained free of charge by writing the Office of Administration, Attention: Printing, Graphics and Distribution Branch, U.S. Nuclear Regulatory Commission, Washington, DC 20555–0001, or by fax at (301)415–2260. Issued guides may also be purchased from the National Technical Information Service on a standing order basis. Details on this service may be obtained by writing NTIS, 5285 Port Royal Road, Springfield, VA 22161. Regulatory guides are not copyrighted, and Commission approval is not required to reproduce them.

(5 U.S.C. 552(a))

Dated at Rockville, Maryland, this 18th day of August 1998.

For the Nuclear Regulatory Commission.

Ashok C. Thadani,

Director, Office of Nuclear Regulatory Research.

[FR Doc. 98–23813 Filed 9–2–98; 8:45 am]

BILLING CODE 7590–01–P

OFFICE OF PERSONNEL MANAGEMENT

Federal Employees Health Benefits Program, Medically Underserved Areas for 1999

AGENCY: Office of Personnel Management.

ACTION: Notice of Medically Underserved Areas for 1999.

SUMMARY: The Office of Personnel Management has completed its annual calculation of the States that qualify as Medically Underserved Areas under the Federal Employees Health Benefits (FEHB) Program for the calendar year 1999. This is necessary to comply with a provision of FEHB law that mandates special consideration for enrollees of certain FEHB plans who receive covered health services in states with critical shortages of primary care physicians. Accordingly, for calendar year 1999, OPM's calculations show that the following States are Medically Underserved Areas under the FEHB Program: Alabama, Idaho, Louisiana, Mississippi, New Mexico, North Dakota, South Carolina, South Dakota, and Wyoming. West Virginia has been removed from the 1998 list, and Idaho and North Dakota have been added.

EFFECTIVE DATE: January 1, 1999.

FOR FURTHER INFORMATION CONTACT: Kenneth A. Lease, 202–606–0004.

SUPPLEMENTARY INFORMATION: FEHB law [5 U.S.C. 8902(m)(2)] mandates special consideration for enrollees of certain FEHB plans who receive covered health services in States with critical shortages of primary care physicians. Such States are designated as Medically Underserved Areas for purposes of the FEHB Program, and the law requires payment to all qualified providers in the States.

FEHB regulations (5 CFR 890.701) require OPM to make an annual calculation of the States that qualify as Medically Underserved Areas for the next calendar year by comparing the latest Department of Health and Human Services State-by-State population counts on primary medical care manpower shortage areas with U.S. Census figures on State resident population.

Office of Personnel Management.

Janice R. Lachance,

Director.

[FR Doc. 98–23694 Filed 9–2–98; 8:45 am]

BILLING CODE 6325–01–P

SECURITIES AND EXCHANGE COMMISSION

[Investment Company Act Release No. 23418; 812–10912]

State Street Bank and Trust Company, et al.; Notice of Application

August 27, 1998.

AGENCY: Securities and Exchange Commission (''SEC'').

ACTION: Notice of application for an order under section 12(d)(1)(J) of the Investment Company Act of 1940 (''Act'') for an exemption from section 12(d)(1) of the Act, under sections 6(c) and 17(b) of the Act for an exemption from section 17(a) of the Act, under section 6(c) of the Act for an exemption from section 17(e) of the Act, and under section 17(d) of the Act and rule 17d–1 under the Act to permit certain joint transactions.

SUMMARY OF THE APPLICATION: Applicants request an order to permit certain registered investment companies and private funds (''Lending Funds'') to use cash collateral from securities lending transactions (''Cash Collateral'') to purchase shares (''Shares'') of one or more series of State Street Navigator Securities Lending Trust (the ''Trust'') and to pay fees based on a share of the revenue generated from securities lending transactions to State Street Bank and Trust Company (''State Street''). The order also would permit State Street and certain of its affiliates (''State Street Entities'') to engage in principal transactions with, and receive brokerage commissions from, certain Lending Funds that are affiliated with State Street or State Street Entities solely as a result of investing Cash Collateral in the Trust.

APPLICANTS: State Street, the Trust, and SSgA Funds.

FILING DATES: The application was filed on December 22, 1997. Applicants have agreed to file an amendment during the notice period, the substance of which is described in this notice.

HEARING OR NOTIFICATION OF HEARING: An order granting the application will be issued unless the SEC orders a hearing. Interested persons may request a hearing by writing to the SEC's Secretary and serving applicants with a copy of the request, personally or by mail. Hearing requests should be received by the SEC by 5:30 p.m. on September 21, 1998, and should be accompanied by proof of service on applicants in the form of an affidavit or, for lawyers, a certificate of service. Hearing requests should state the nature of the writer's interest, the reason for the request, and the issues contested. Persons who wish to be notified of a hearing may request notification by writing to the SEC's Secretary.

ADDRESSES: Secretary, SEC, 450 Fifth Street, NW., Washington, DC 20549. State Street, Two International Place, Boston, MA 02110; Trust, c/o Raymond P. Boulanger, Exchange Place, 25th Floor, Boston, MA 02109; SSgA Funds, 909 A Street, Tacoma, WA 98402.

FOR FURTHER INFORMATION CONTACT: Michael W. Mundt, Staff Attorney, at (202) 942–0578, or Mary Kay Frech, Branch Chief, at (202) 942–0564 (Office of Investment Company Regulation, Division of Investment Management).

SUPPLEMENTARY INFORMATION: The following is a summary of the application. The complete application may be obtained for a fee at the SEC's Public Reference Branch, 450 Fifth St., NW., Washington, DC 20549, (202) 942–8090.

Applicants' Representations

1. State Street, a wholly-owned subsidiary of State Street Boston Corporation, is a Massachusetts chartered trust company and a member of the Federal Reserve System. State Street provides institutional custody and asset management services and serves as investment adviser or subadviser for several registered management investment companies. SSgA Funds, a Massachusetts business trust, is an open-end management investment company registered under the Act that has established 19 series, each advised by State Street. State Street also administers a securities lending program (the ''Program'').

2. The Trust is a Massachusetts business trust and an open-end management investment company registered under the Act. The Trust has established three series in which Cash Collateral may be invested: State Street Navigator Securities Lending Prime Portfolio (''Prime Portfolio''), State Street Navigator Securities Lending Government Portfolio (''Government Portfolio''), and State Street Navigator Securities Lending Short-Term Bond Portfolio (''Bond Portfolio'') (each an ''Investment Fund''). The Prime Portfolio and Government Portfolio value their securities based on the amortized cost method and comply with rule 2a–7 under the Act. The Bond Portfolio invests in a variety of securities whose duration will not exceed five years. None of the Investment Funds may purchase shares of any registered investment company.

3. Shares of the Investment Funds are offered exclusively to Lending Funds and other institutional investors participating in the Program and are sold directly by the Trust on a private placement basis in accordance with Regulation D under the Securities Act of 1933. Shares are not subject to a sales load, redemption fee or asset-based distribution fee. State Street serves as investment adviser, custodian, transfer agent, and administrator of the Trust with respect to each Investment Fund and is entitled to receive a fee for these services.

4. Participants in the Program may include: (i) one or more series of SSgA Funds and any other registered investment company or series that is or in the future may be advised by State Street, or by any other entity controlling, controlled by, or under common control with State Street (each an ''Affiliated Lending Fund'');[1] or (ii) any other registered investment company or series (each an ''Other Lending Fund,'' and together with the Affiliated Lending Funds, the ''Registered Lending Funds''), and (iii) any entity excluded from the definition of ''investment company'' under section 3(c)(1) or section 3(c)(7) of the Act (each a ''Private Lending Fund'').

5. With respect to Affiliated Lending Funds, State Street represents that its personnel providing day-to-day lending agency services to the Affiliated Lending Funds do not provide investment advisory services to or participate in any way in the selection of portfolio securities or other aspects of management for the Affiliated Lending Funds.

6. Under the Program, State Street and each Lending Fund enter into a securities lending agreement (''Lending Agreement'') that appoints State Street to serve as securities lending agent and authorizes State Street to enter into a master borrowing agreement (''Borrowing Agreement'') with certain entities designated by a Lending Fund (''Borrowers''). Under the Borrowing Agreement, State Street lends securities to Borrowers in exchange for Cash Collateral or other types of collateral, such as U.S. Government securities or irrevocable letters of credit, upon the consent of the Lending Fund. Cash Collateral is delivered in connection with most loans. State Street invests any Cash Collateral in Shares of one or more Investment Funds on behalf of the Lending Fund in accordance with specific guidelines provided by the Lending Fund. These guidelines identify the particular Investment Funds and other investments, if any, in which Cash Collateral may be invested, as well as the amounts that may be invested.

7. With respect to loans involving Cash Collateral, the Lending Fund commits to pay the Borrower a fixed return on the collateral for the term of the loan (''Borrower's Rebate''). The difference between the Borrower's Rebate and the actual return on the investment of the Cash Collateral is divided between the Lending Fund and State Street in accordance with the terms of the Lending Agreement (''Shared Return''). In the case of collateral other than cash, State Street negotiates a loan fee to be paid by the Borrower, which is divided between the Lending Fund and State Street in accordance with the terms of the Lending Agreement (''Shared Lending Fee'').

8. As agent for a Registered Lending Fund, State Street may not purchase Shares of an Investment Fund with Cash Collateral unless participation in the Program has been approved by a majority of the directors or trustees of the Registered Lending Fund that are not ''interested persons'' of the Registered Lending Fund within the meaning of section 2(a)(19) of the Act (''Disinterested Directors''). These directors or trustees are required to evaluate the Program on at least an annual basis to determine that the investment of Cash Collateral in an Investment Fund is in the best interests of the shareholders of the Registered Lending Fund.

9. In addition, State Street may not purchase Shares of any Investment Fund as agent for a Registered Lending Fund unless the Registered Lending Fund has represented to State Street that (i) its policies generally permit the Registered Lending Fund to engage in securities lending transactions, (ii) the transactions are conducted in accordance with the guidelines of the SEC and/or its staff, (iii) the Registered Lending Fund's policies permit the

[1] All existing Affiliated Lending Funds that currently intend to rely on the requested relief have been named as applicants. Any future Affiliated Lending Fund may rely on the order only in accordance with the terms and conditions in the application.

Registered Lending Fund to purchase Shares of the Investment Funds with Cash Collateral, and (iv) the Registered Lending Fund's securities lending activities are conducted in accordance with all representations and conditions in the application applicable to a Registered Lending Fund.

Applicants' Legal Analysis

A. Investment of Cash Collateral by the Lending Funds in the Investment Funds

1. Section 12(d)(1)(A) of the Act prohibits an investment company from acquiring shares of a registered investment company if the securities represent more than 3% of the total outstanding voting stock of the acquired company, more than 5% of the total assets of the acquiring company, or, together with the securities of any other investment companies, more than 10% of the total assets of the acquiring company. Section 12(d)(1)(B) of the Act prohibits a registered open-end investment company from selling its shares to another investment company if the sale will cause the acquiring company to own more than 3% of the acquired company's voting stock, or if the sale will cause more than 10% of the acquired company's voting stock to be owned by investment companies generally. Any entity that is excluded from the definition of ''investment company'' under sections 3(c)(1) or 3(c)(7) of the Act is deemed to be an investment company for the purposes of the 3% limitations specified in sections 12(d)(1) (A) and (B) with respect to purchases by and sales to such company.

2. Section 12(d)(1)(J) of the Act provides that the SEC may exempt any person, security or transaction, or any class or classes of persons, securities or transactions, from any provision of section 12(d)(1) if such exemption is consistent with the public interest and the protection of investors.

3. Applicants seek an order under section 12(d)(1)(J) of the Act exempting them from the provisions of section 12(d)(1) of the Act to permit the Lending Funds to purchase, and the Investment Funds to sell, securities in excess of the limits of sections 12(d)(1)(A) and 12(d)(1)(B) in connection with the Lending Funds' investment of Cash Collateral.

4. Applicants state that the proposed arrangement will not give rise to the policy concerns underlying sections 12(d)(1)(A) and (B). Applicants note that Shares will be sold without a sales load, redemption fee, or asset-based sales charge or service fee. Applicants further state that, because investment advisory fees paid by Lending Funds will not be affected by the value of the collateral received by the Lending Funds in connection with the loaned securities, the fees that would be paid to State Street by an Investment Fund, including investment advisory fees, should not be viewed as duplicative of the advisory fees paid by the Lending Funds. Because each Investment Fund will be operated for the purpose of providing the necessary liquidity to satisfy the demands of the Program, applicants argue that the Investment Funds will not be susceptible to control through the threat of large redemptions. Applicants assert that there is no concern that Shares will be purchased by an inappropriate investor because Shares will be offered exclusively to participants in the Program, who are knowledgeable and sophisticated investors. Applicants also note that an Investment Fund will not invest in shares of any investment company.

5. Sections 17(a)(1) and (2) of the Act make it unlawful for any affiliated person of a registered investment company, or any affiliated person of the affiliated person (''Second-tier Affiliate''), acting as principal, to sell any security to, or purchase any security from, the registered investment company. Section 2(a)(3) of the Act defines an ''affiliated person'' of another person to include any person 5% or more of whose outstanding voting securities are directly or indirectly owned, controlled, or held with power to vote by the other person; any person directly or indirectly controlling, controlled by, or under common control with the other person; and, in the case of an investment company, its investment adviser.

6. An investment adviser to each of the Affiliated Lending Funds and the Investment Funds, State Street could be deemed to control both the Affiliated Lending Funds and the Investment Funds. Accordingly, the Affiliated Lending Funds and Investment Funds could be deemed to be under common control and affiliated persons of each other. In addition, if an Other Lending Fund acquires 5% or more of an Investment Fund's Shares, the Investment Fund could be deemed an affiliated person of the Other Lending Fund. Moreover, because series of a registered investment company could be considered to be under common control, an Other Lending Fund that is a series could be considered an affiliate of another series of the registered investment company. If the other series is affiliated with an Investment Fund (by virtue of a common investment adviser or a 5% or more ownership interest in the Investment Fund), the Investment Fund could be deemed to be a Second-tier Affiliate of the Other Lending Fund. In light of these possible affiliations, section 17(a) could prevent an Investment Fund from selling Shares to and redeeming Shares from certain Registered Lending Funds.

7. Section 17(b) of the Act authorizes the SEC to exempt a transaction from section 17(a) if the terms of the proposed transaction are reasonable and fair and do not involve overreaching on the part of any person concerned, and if the proposed transaction is consistent with the policy of each registered investment company concerned and with the general purposes of the Act. Section 6(c) of the Act provides that the SEC may exempt any person, security, or transaction from any provision of the Act if the exemption is necessary or appropriate in the public interest and consistent with the protection of investors and the purposes fairly intended by the policy and provisions of the Act.

8. Applicants request an order under sections 6(c) and 17(b) of the Act to permit the Registered Lending Funds to purchase Shares of the Investment Funds. Applicants submit that the terms of the proposed transactions are reasonable and fair and consistent with the general purposes of the Act, as well as with the policies of the respective Registered Lending Funds. Applicants assert that Registered Lending Funds will be treated like any other shareholders of the Trust and will purchase and redeem Shares on the same terms and basis, including price, as other shareholders. Applicants note that a Registered Lending Fund will only be permitted to invest Cash Collateral in an Investment Fund that invests in instruments that the Registered Lending Fund has previously determined to be acceptable for the investment of Cash Collateral. Cash Collateral from loans by Registered Lending Funds that are money market funds (''Money Market Lending Funds'') will not be used to acquire shares of any Investment Fund that does not comply with the requirements of rule 2a–7 under the Act. For these reasons, applicants believe that their requested relief meets the standards of sections 6(c) and 17(b) of the Act.

9. Section 17(d) of the Act and rule 17d–1 under the Act prohibit any affiliated person of a registered investment company or any Second-tier Affiliate, acting as principal, from effecting any transaction in connection with any joint enterprise or joint arrangement in which the investment company participates, unless and

application regarding the joint arrangement has been filed with the SEC and granted by order.

10. State Street, as investment adviser to the Affiliated Lending Funds, is an affiliated person of the Affiliated Lending Funds. State Street may also be a Second-tier Affiliate of Other Lending Funds that purchase more than 5% of an Investment Fund. Applicants state that the Affiliated Lending Funds and potentially the Other Lending Funds by purchasing and redeeming Shares, the Investment Funds by selling Shares to and redeeming Shares for the Lending Funds, and State Street by acting as investment adviser to the Affiliated Lending Funds and the Investment Funds and by acting as lending agent, investing Cash Collateral, and sharing revenue generated by the securities lending transactions, could be considered participants in a joint enterprise or arrangement. Applicants request an order in accordance with section 17(d) and rule 17d–1 to permit certain transactions incident to investments in Shares.

11. Under rule 17d–1, in passing on applications for orders under section 17(d), the SEC must consider whether the investment company's participation in the joint enterprise or joint arrangement is consistent with the provisions, policies, and purposes of the Act and the extent to which such participation is on a basis different from or less advantageous than that of other participants.

12. Applicants assert that the Registered Lending Funds will invest in the Investment Funds on the same basis as other participants in the Program. Accordingly, applicants believe that the proposed investment in Shares meets the standards of section 17(d) and rule 17d–1.

B. Payment of Fees by the Registered Lending Funds to State Street

1. Applicants also believe that a lending agent arrangement between Registered Lending Funds and State Street under which compensation is based on a share of the revenue generated by State Street's efforts as lending agent may be a joint enterprise or other joint arrangement requiring as order under section 17(d) of the Act and rule 17d–1 under the Act. Consequently, applicants request an order to permit State Street, as lending agent, to receive either a portion of the Shared Return or Shared Lending Fee from the Registered Lending Funds.

2. Applicants submit that to safeguard each Affiliated Lending Fund and its shareholders, applicants will adopt the following procedures to ensure that the proposed fee arrangement and other terms governing the relationship with State Street, as lending agent, will meet the standards of rule 17d–1:

(a) In connection with the approval of State Street as lending agent for an Affiliated Lending Fund and implementation of the proposed fee arrangement, a majority of the board of directors or trustees of the Affiliated Lending Fund (the ''Board''), including a majority of the Disinterested Directors, will determine that: (i) The contract with State Street is in the best interests of the Affiliated Lending Fund and its shareholders, (ii) the services to be performed by State Street are appropriate for the Affiliated Lending Fund, (iii) the nature and quality of the services provided by State Street are at least equal to those services offered and provided by others, and (iv) the fees for State Street's services are fair and reasonable in light of the usual and customary charges imposed by others for services of the same nature and quality.

(b) Each Affiliated Lending Fund's contract with State Street for lending agent services will be reviewed annually and will be approved for continuation only if a majority of the Board (including a majority of the Disinterested Directors) makes the findings referred to in paragraph (a) above.

(c) In connection with the initial implementation of the proposed fee arrangement whereby State Street will be compensated as lending agent based on a percentage of the revenue generated by an Affiliated Lending Fund's participation in the Program, the Board will obtain competing quotes with respect to lending agent fees from at least three independent lending agents to assist the Board in making the findings referred to in paragraph (a) above.

(d) The Board, including a majority of the Disinterested Directors, will: (i) Determine at each regular quarterly meeting that the loan transactions during the prior quarter were effected in compliance with the conditions and procedures set forth in the application and, (ii) review no less frequently than annually the conditions and procedures for continuing appropriateness.

(e) Each Affiliated Lending Fund will: (i) Maintain and preserve permanently in an easily accessible place a written copy of the procedures and conditions (and any modifications) described in the application of otherwise followed in connection with lending securities pursuant to the Program, and (ii) maintain and preserve for a period not less than six years from the end of the fiscal year in which any loan transaction pursuant to the Program occurred, the first two years in an easily accessible place, a written record of each loan transaction setting forth a description of the security loaned, the identity of the person on the other side of the loan transaction, the terms of the loan transaction, and the information or materials upon which the determination was made that each loan was made in accordance with the procedures set forth above and the conditions to the application.

3. With respect to Other Lending Funds, applicants assert that the nature of the affiliation between the Other Lending Funds and State Street is only technical. Applicants assert that State Street would not have any influence over the decisions made by any Other Lending Fund and that any fee arrangements between the Other Lending Funds and State Street will be the product of arms-length bargaining. Accordingly, applicants believe that the proposed arrangement between Other Lending Funds and State Street would meet the standards of rule 17d–1.

C. Transactions by Other Lending Funds With State Street and State Street Entities

1. As noted above, sections 17(a)(1) and (2) prohibit certain principal transactions between a registered investment company and its affiliates. Applicants assert that State Street could be deemed a Second-tier Affiliate of an Other Lending Fund that owns 5% of an Investment Fund. In addition, to the extent that State Street, State Street Entities, and the Investment Funds are deemed to be under common control, applicants believe that a State Street Entity could be considered an affiliate of an Investment Fund and a Second-tier Affiliate of an Other Lending Fund.

2. Applicants request relief under sections 6(c) and 17(b) from section 17(a) to permit principal transactions between Other Lending Funds and State Street or State Street Entities where the affiliation between the parties arises solely as a result of an investment by an Other Lending Fund in Shares. Applicants state that there will be no element of self-dealing because neither State Street nor any State Street Entity has any influence over the decisions made by any Other Lending Fund. Applicants assert that each transaction will be the product of arms-length bargaining. Because the interests of the Other Lending Funds' investment advisers and sub-advisers are solely aligned with those of the Other Lending Funds (to which the advisers have fiduciary responsibilities), applicants

believe it is reasonable to conclude that the consideration paid to or received by Other Lending Funds in connection with a principal transaction with State Street or a State Street Entity will be reasonable and fair.

3. Section 17(e) of the Act makes it unlawful for any affiliated person of a registered investment company, or any Second-tier Affiliate, acting as broker in connection with the sale of securities to or by that registered investment company, to receive from any source a commission for effecting the transaction that exceeds specified limits. Rule 17e–1 provides that a commission shall be deemed a usual and customary broker's commission if certain procedures are followed by the registered investment company.

4. Applicants request relief under section 6(c) from section 17(e) to the extent necessary to permit State Street and the State Street Entities to receive fees or commissions for acting as broker or agent in connection with the purchase or sale of securities for any Other Lending Fund for which State Street or a State Street Entity becomes a Second-tier Affiliate solely because of the investment by the Other Lending Fund in Shares.

5. Applicants submit that brokerage or similar transactions by State Street or a State Street Entity for the Other Lending Funds raise no possibility of self-dealing or any concern that these Other Lending Funds would be managed in the interest of State Street or a State Street Entity. Applicants believe that each transaction between an Other Lending Fund and State Street or a State Street Entity would be the product of arms-length bargaining because each adviser or sub-adviser to an Other Lending Fund would have no interest in benefiting State Street or a State Street Entity at the expense of the Other Lending Fund.

Applicants' Conditions

Applicants agree that any order of the SEC granting the requested relief will be subject to the following conditions:

1. The securities lending program of each Registered Lending Fund will comply with all present and future applicable guidelines of the SEC and its staff regarding securities lending arrangements.

2. The approval of an Affiliated Lending Fund's Board, including a majority of the Disinterested Directors, shall be required for the initial and subsequent approvals of State Street's service as lending agent for the Affiliated Lending Fund pursuant to the Program, for the institution of all procedures relating to the Program as it relates to the Affiliated Lending Fund, and for any periodic review of loan transactions for which State Street acted as lending agent pursuant to the Program.

3. No Registered Lending Fund will purchase Shares of any Investment Fund unless participation in the Program has been approved by a majority of the Disinterested Directors of the Registered Lending Fund. Such directors and trustees also will evaluate the Program no less frequently than annually and determine that investing Cash Collateral in the Investment Funds is in the best interests of the shareholders of the Registered Lending Fund.

4. Investment in Shares of an Investment Fund by a particular Registered Lending Fund will be consistent with the Registered Lending Fund's investment objectives and policies. A Money Market Lending Fund that complies with rule 2a–7 under the Act will not invest its Cash Collateral in an Investment Fund that does not comply with the requirements of rule 2a–7.

5. Investment in Shares of an Investment Fund by a particular Registered Lending Fund will be in accordance with the guidelines regarding the investment of Cash Collateral specified by the Registered Lending Fund in the Lending Agreement. A Registered Lending Fund's Cash Collateral will be invested in a particular Investment fund only if that Investment Fund has been approved for investment by the Registered Lending Fund and if that Investment Fund invests in the types of instruments that the Registered Lending Fund has authorized for the investment of its Cash Collateral.

6. Shares of an Investment Fund will not be subject to a sales load, redemption fee or asset-based sales charge or service fee (as defined in rule 2830(b)(9) of the Conduct Rules of the National Association of Securities Dealers, Inc.).

7. None of the Investment Funds may purchase shares of any investment company.

For the SEC, by the Division of Investment Management, under delegated authority.

Jonathan G. Katz,

Secretary.

[FR Doc. 98–23761 Filed 9–2–98; 8:45 am]

BILLING CODE 8010–01–M

SECURITIES AND EXCHANGE COMMISSION

[Release No. 34–40373; File No. 4–208]

Intermarket Trading System; Notice of Filing of Proposed Thirteenth Amendment to the ITS Plan Relating to the Elimination of the Requirement That the Cincinnati Stock Exchange, Inc. Submit Proposed Rule Changes to Its Rule 11.9 or the Description of NSTS Processing to Other ITS Participants for Review and Comment Prior to Filing Such Changes With the Securities and Exchange Commission, and Making Certain Technical Changes

August 27, 1998.

Pursuant to Rule 11 Aa3–2 under the Securities Exchange Act of 1934 (''Exchange Act'' or ''Act''), notice is hereby given that on August 17, 1998, the Intermarket Trading System (''ITS'') submitted to the Securities and Exchange Commission (''Commission'') an amendment (''Thirteenth Amendment'') to the restated ITS Plan.[1] The purpose of the amendment is to (1) eliminate the requirement that the Cincinnati Stock Exchange, Inc., submit proposed rule changes to its Rule 11.9 or the description of NSTS processing to other ITS Participants for review and comment prior to filing such changes with the Commission; (2) recognize the change in corporate name from the Pacific Stock Exchange, Inc. (''PSE'') to the Pacific Exchange, Inc. (''PCX''); (3) change the corporate address of the CSE; and (4) make a technical correction to Section 8(e)(iv)(D). The Commission is publishing this notice to solicit comments on the amendment from interested persons.

The ITS is a communications and order routing network linking eight national securities exchanges and the electronic over-the-counter (''OTC'') market operated by the National Association of Securities Dealers, Inc. (''NASD''). The ITS was designed to facilitate intermarket trading in exchange-listed equity securities based on current quotation information emanating from the linked markets.

Participants to the ITS Plan include the American Stock Exchange, Inc. (''Amex''), the Boston Stock Exchange, Inc. (''BSE''), the Chicago Board Options Exchange, Inc. (''CBOE''), the Chicago Stock Exchange, Inc. (''CHX''), the Cincinnati Stock Exchange, Inc. (''CSE''), the NASD, the New York Stock

[1] The ITS Plan is a National Market System (''NMS'') plan approved by the Commission pursuant to Section 11A of the Act and Rule 11Aa3–2. Exchange Act Release No. 19456 (January 27, 1983), 48 FR 4938.

Exchange, Inc. (''NYSE''), the PCX, and the Philadelphia Stock Exchange, Inc. (''PHLX'').

I. Description of the Amendment

The purpose of the amendments is to (1) eliminate the requirement that the CSE must submit proposed changes to its Rule 11.9 or the description of NSTS processing to other ITS Participants for review and comment prior to filing such changes with the Commission; (2) recognize the change in corporate name from the Pacific Stock Exchange, Inc. (''PSE'') to the Pacific Exchange, Inc. (''PCX''); (3) change the corporate address of the CSE; and (4) make a technical correction to Section 8(e)(iv)(D).

The amendment concerning prior review of CSE rule changes responds to the Commission's request in its letter to all Participants, dated May 27, 1997.[2]

To amend the second paragraph of Section 8(e)(iii) to read, in full, as follows: 8. Participants' Implementation Obligations. (e) CSE Implementation Obligations (iii) NSTS Rule Changes.

The CSE shall not alter (A) the obligations of a Designated Dealer set out in CSE Rule 11.9 so as to remove the obligation of Designated Dealers to make continuous, two-sided markets in stocks assigned to them as Designated Dealers or (B) the definition of ''Contributing Dealer'' in CSE Rule 11.9 so as to remove the obligations of Contributing Dealers to provide to all NSTS Users through NSTS, during CSE trading hours, regular bids and offers in stocks in which they are registered as Contributing Dealers.

To change all references to ''Pacific Stock Exchange'' and ''PSE'' to ''Pacific Exchange'' and ''PCX'', respectively. The sections to be amended are: Preamble, first paragraph; Section 1(33), (34A), (34B), Section 3, Section 6(a)(ii), Section 7(a) and Section 11(a)(iii)(E–1).

To amend Section 3, in part, as follows: Cincinnati Stock Exchange, Inc. (''CSE''), registered as a national securities exchange under the Act and having its principal place of business at One Financial Place, 440 South LaSalle Street, Suite 2600, Chicago, Illinois 60605.

To cause the second sentence of subsection (e)(iv)(D) of Section 8 to read, in full, as follows: The other Participants undertake to consider in good faith any such proposed interpretation with a view towards making a determination as anticipated by section 1(1B) that ''Approved Dealer'' no longer excludes ''Contributing Dealers.''

II. Solicitation of Comments

Interested persons are invited to submit written data, views, and arguments concerning the foregoing, including whether the proposed amendments are consistent with the Act. Persons making written submissions should file six copies thereof with the Secretary, Securities and Exchange Commission, 450 Fifth Street, NW, Washington, DC 20549. Copies of the submission, all subsequent amendments, all written statements with respect to the proposed plan amendment that are filed with the Commission, and all written communications relating to the proposed plan amendment between the Commission and any person, other than those that may be withheld from the public in accordance with the provisions of 5 U.S.C. 552, will be available for inspection and copying at the Commission's Public Reference Room. Copies of the filing will also be available for inspection and copying at the principal office of the ITS. All submissions should refer to File No. 4–208 and should be submitted by September 24, 1998.

For the Commission, by the Division of Market Regulation, pursuant to delegated authority.[3]

Jonathan G. Katz,

Secretary.

[FR Doc. 98–23763 Filed 9–2–98; 8:45 am]

BILLING CODE 8010–01–M

[2] *See* letter from Jonathan G. Katz, Secretary, Commission, to ITS Participants, dated May 27, 1997.

[3] 17 CFR 200.30–3(a)(29).

SECURITIES AND EXCHANGE COMMISSION

[Release Nos. 33–7568; 34–40377; 35–26912; IA–1749; and IC–23416]

Commission Statement of Policy on Regulatory Moratorium to Facilitate the Year 2000 Conversion

AGENCY: Securities and Exchange Commission.

ACTION: Policy Statement.

SUMMARY: The Securities and Exchange Commission (''SEC'' or ''Commission'') is announcing a moratorium on the implementation of new Commission rules that require major reprogramming of computer systems by SEC-regulated entities between June 1, 1999 and March 31, 2000. The moratorium is intended to facilitate and encourage securities industry participants to allocate significant time and resources to addressing the potential problems caused by the Year 2000 computer technology conversion.

FOR FURTHER INFORMATION CONTACT: Primary Contacts—Sheila Slevin at (202 942–0796), or Sarrita Cypress at (202 942–0735), Division of Market Regulation. Secondary Contacts for Specific Program Areas—Mauri Osheroff at (202 942–2840), Division of Corporation Finance, or Robert E. Plaze (202 942–0716), Division of Investment Management.

SUPPLEMENTARY INFORMATION:

I. Background

The ''Year 2000 problem'' is generally understood to be a problem caused by computerized systems that are programmed to use a two-digit rather than four-digit number to represent the year. The ''19'' that precedes dates in this century was assumed. Consequently, systems programmed in this fashion may mistake the Year 2000 for 1900, or some other incorrect date. To mitigate potential problems caused by the Year 2000 computer conversion, the SEC has worked closely with the securities industry to encourage participants to remediate systems that are not Year 2000 compliant and test systems that are critical to the operation of the nation's capital markets as the millennium approaches.

II. Year 2000 Regulatory Moratorium

Because the Commission views the Year 2000 problem as an extremely serious issue, it has determined to declare a moratorium on the implementation of new Commission rules requiring major reprogramming. Under this moratorium, no new Commission rules requiring major reprogramming will be made effective between June 1, 1999 and March 31, 2000.

Although the Commission will continue to consider necessary revisions to its rules, it will refrain from putting into effect changes to its rules having a major impact on computer systems during this critical transition period. Of course, the Commission reserves the right to implement new rules, where such rulemaking is necessary to protect the public interest in response to emergency conditions or special circumstances that may arise during the moratorium.[1]

The regulatory moratorium is limited to Commission rulemaking and shall not apply to rule changes by self-regulatory organizations, such as the National Association of Securities Dealers, Inc.

[1] This moratorium will not apply to rules designed to implement changes to the EDGAR system.

and the New York Stock Exchange, or independent standard setting organizations like the Financial Accounting Standards Board.[2]

This policy statement is intended only to set forth the Commission's intention and expectation regarding its rulemaking activities during the period indicated above.[3] It also shall not be construed as creating any right or benefit, substantive or procedural, enforceable at law or in equity, by any person against the Commission. This policy statement shall not be construed to create any right to judicial review involving the compliance or noncompliance of the Commission with the statement.

III. Regulatory Requirements

This general policy statement is not an agency rule requiring notice of proposed rulemaking, opportunities for public participation, and prior publication under the provisions of the Administrative Procedure Act (''APA'').[4] Similarly, the provisions of the Regulatory Flexibility Act,[5] which apply only when notice and comment are required by the APA or another statute, are not applicable.

IV. Conclusion

The Commission believes the foregoing statement of policy provides a sound basis for the Commission's action and makes a significant contribution to meeting the needs of investors and the capital markets.

By the Commission.

Jonathan G. Katz,

Secretary.

[FR Doc. 98–23760 Filed 9–2–98; 8:45 am]

BILLING CODE 8010–01–U

[2] Rules and standards established by private entities such as the Securities Investor Protection Corporation and the American Institute of Certified Public Accountants similarly are not subject to the moratorium.

[3] Accordingly, the moratorium shall not affect any remedies the Commission may seek in an enforcement proceeding against a regulated entity.

[4] 5 U.S.C. 553.

[5] 5 U.S.C. 601–602.

SECURITIES AND EXCHANGE COMMISSION

[Release No. 34–40367; File No. SR–Amex–98–24]

Self-Regulatory Organizations; American Stock Exchange, Inc.; Order Granting Approval to Proposed Rule Change and Notice of Filing and Order Granting Accelerated Approval to Amendment No. 1 Relating to the Listing and Trading of Merrill Lynch EuroFund Market Index Target Term Securities

August 26, 1998.

I. Introduction

On June 30, 1998, the American Stock Exchange, Inc. (''Exchange'' or ''Amex'') submitted to the Securities and Exchange Commission (''Commission''), pursuant to Section 19(b)(1) of the Securities Exchange Act of 1934 (''Act'')[1] and Rule 19b–4 thereunder,[2] a proposed rule change to approve for listing and trading under Section 107A of the Exchange's *Company Guide*, Merrill Lynch EuroFund Market Index Target Term Securities℠ (''MITTS® Securities'') based in whole or in part on changes in the value of the Merrill Lynch EuroFund Index (''EuroFund Index'').[3]

The proposed rule change was published for comment in Securities Exchange Act Release No. 40228 (July 17, 1998), 63 FR 40145 (July 27, 1998). No comment letters were received in response to the proposal. The Exchange submitted Amendment No. 1 to the proposed rule change on August 21, 1998.[4] This order grants approval to the proposed rule change and accelerates approval of Amendment No. 1.

[1] 15 U.S.C. 78s(b)(1).

[2] 17 CFR 240.19b–4.

[3] The Commission notes that the ''EuroFund Index'' (a term defined in the prospectus for the MITTS Securities) reflects the adjusted total return of Class B shares of the Merrill Lynch EuroFund, a mutual fund registered under the Investment Company Act of 1940. The EuroFund Index does not measure the performance of any securities other than Class B shares of the Merrill Lynch EuroFund.

[4] Amendment No. 1 discusses the surveillance procedures that the Exchange will undertake with regard to trading in the MITTS Securities. The Exchange represented that its Market Surveillance department will monitor trading in the MITTS Securities and shares of the EuroFund underlying the EuroFund Index. If the Market Surveillance department detects unusual trading activity in the MITTS Securities, it will examine, if necessary, trading activity in the EuroFund's component stocks and the redemption activity in shares of the EuroFund. *See* Letter to Sharon Lawson, Senior Special Counsel, Division of Market Regulation, Commission, from Claire P. McGrath, Vice President and Special Counsel, Exchange, dated August 20, 1998.

II. Description of the Proposal

a. Listing Requirements

The Exchange seeks to list the MITTS Securities for trading under Section 107A of the Exchange's *Company Guide*. Section 107A provides for the listing and trading of securities that cannot be readily categorized under the listing criteria for common and preferred stocks, bonds, debentures, or warrants.[5] The MITTS Securities are structured as senior, unsecured debt securities, the value of which will be linked, in whole or in part, to the adjusted total return value of Class B shares of the Merrill Lynch EuroFund (''EuroFund'').[6] The EuroFund is an open-end mutual fund registered under the Investment Company Act of 1940 and is a ''diversified company'' as defined in Section 5(b)(1) of the Investment Company Act of 1940.[7]

The Exchange has represented that both the issue (MITTS Securities) and the issuer (Merrill Lynch & Co., Inc.) will conform to and meet the listing guidelines set forth in Section 107A of the Exchange's *Company Guide*.[8] In addition: (i) the issuer has a minimum

[5] *See* Securities Exchange Act Release No. 27753 (Mar. 1, 1990), 55 FR 8626 (Mar. 8, 1990).

[6] According to the prospectus prepared by the underwriter, the EuroFund is a diversified, open-end management company that seeks to provide shareholders with capital appreciation primarily through investment in equities of corporations domiciled in European countries. While there are no prescribed limits on geographic distribution within the European community, it currently is anticipated that a majority of the EuroFund's assets will be invested in equity securities of issuers domiciled in Western European countries. Current income from dividends and interest will not be an important consideration in selecting portfolio securities. The EuroFund expects that under normal market conditions at least 80% of its net assets will be invested in European corporate securities, primarily common stocks, and debt and preferred securities convertible into common stocks.

[7] *See* 15 U.S.C. 80a–5(b)(1). Section 5(b)(1) requires that at least 75% of the value of a diversified company's total assets must represent cash; cash items; government securities; securities of other investment companies; and other securities which, with respect to any single issuer, do not account for more than: (i) 5% of the value of the management company's total assets, and (ii) 10% of the outstanding voting securities of that issuer.

[8] Specifically, the MITTS Securities must have: (i) a minimum public distribution of one million trading units; (ii) a minimum of 400 public holders (if traded in thousand dollar denominations then no number of holders is required); and (iii) an aggregate market value not less than $4 million. In addition, the issuer of the MITTS Securities must have assets in excess of $100 million and stockholders' equity of at least $10 million, and must meet the earnings criteria set forth in Section 101 of the Exchange's *Company Guide*. If the issuer of the MITTS Securities did not have pre-tax income of at least $750,000 in its last fiscal year, or in two of its last three fiscal years, the issuer must have: (i) assets in excess of $200 million and stockholders' equity of at least $10 million; or (ii) assets in excess of $100 million and stockholders' equity of at least $20 million.

tangible net worth in excess of $250 million; (ii) the EuroFund has total net assets of approximately $2.16 billion; and (iii) the EuroFund's net asset value (''NAV'')[9] is reported each day through the facilities of the National Association of Securities Dealers Automated Quotation System (''Nasdaq''). The Exchange's continued listing guidelines governing the MITTS Securities are set forth in Sections 1001 through 1003 of the Exchange's *Company Guide*. In particular, Section 1003(b) regarding suspensions and delistings with respect to limited distribution and reduced market value will apply to MITTS Securities.[10]

b. Description of MITTS Securities on the EuroFund

The MITTS Securities will provide for payment at maturity based in whole or in part on changes in the value of the EuroFund Index, an index based on the adjusted total return of the Class B shares of the EuroFund.[11] The total return value reflects the change in the NAV of Class B shares of the EuroFund, plus cash dividends and distributions paid on those shares. After the Exchange calculates the EuroFund Index based on changes in the total return value, the Exchange will reduce the EuroFund Index value each day by a percentage equal to the pro rata portion of an annual reduction factor. The annual reduction factor is expected to be between 2.50% and 2.75% of the value of the EuroFund Index and will be determined on the date that the MITTS Securities are priced for initial sale to the public.[12] The EuroFund Index, as adjusted by the annual reduction factor, will be calculated by the Exchange once a day after the EuroFund's NAV has been determined. After calculation, the EuroFund Index value will be disseminated over the Consolidated Tape Association's Network B and updated again after the next close of trading and reporting of the EuroFund's NAV.[13] Likewise, the EuroFund's NAV will be disseminated through the facilities of Nasdaq subsequent to calculation. If the EuroFund does not comply with the Rule 22c–1 under the Investment Company Act of 1940,[14] which requires daily computation of a fund's current NAV, the Exchange will use the last available price in its calculation.

c. Maturity and Settlement of MITTS Securities

A specific maturity date will not be established until the time of the offering, however, the underwriter's preliminary prospectus indicates that the MITTS Securities are expected to mature sometime in February, 2006. Although the value of the MITTS Securities will be derived from the performance of Class B shares of the EuroFund, the MITTS Securities will settle in Class D shares of the EuroFund.[15] Specifically, the MITTS Securities will guarantee holders 100% of principal return plus any additional amount that may be due as a result of appreciation of the adjusted total return of Class B shares to be paid in either the value of Class D shares of the EuroFund or, if such shares are unavailable, cash. the MITTS Securities will settle by delivery of the number of Class D shares of the EuroFund equal in value to the principal amount ($10 per MITTS Security) plus the Supplemental Redemption Amount,[16] if any, based on the NAV for Class D shares determined on a specified date prior to the stated maturity of the MITTS Securities.[17] If the issuer is unable to deliver the Class D shares because the EuroFund is not issuing Class D shares to new investors in the EuroFund as of the date immediately prior to the stated maturity date, it will pay the equivalent amount in cash.

d. Exchange Rules Applicable to MITTS

Because the MITTS Securities are linked to the EuroFund, which holds a portfolio of equity securities, the Exchange has decided to apply its equity floor trading rules. Regular equity trading hours (9:30 A.M. to 4:00 P.M. Eastern Standard Time) will govern the trading of the MITTS Securities. In addition, the MITTS Securities will be subject to the equity margin rules of the Exchange.[18]

In accordance with Exchange Rule 411,[19] the Exchange shall impose a duty of due diligence on its members and member firms to determine the essential facts relating to customers prior to their purchasing and trading MITTS Securities. Furthermore, consistent with the offering of other structured products, the Exchange will distribute a circular to its membership prior to the commencement of trading in the MITTS Securities to provide guidance regarding member firm compliance responsibilities, including appropriate suitability criteria and/or guidelines. The circular shall require that before an Exchange member, member organization, or employee of such member organization, undertakes to recommend a transaction in the MITTS Securities, such member or member organization should make a determination that the MITTS Securities are suitable for such customer. As part of that determination, the person making the recommendation should have a reasonable basis for believing at

[9] The EuroFund's prospectus states that the net asset value per share is computed by dividing the sum of the value of the securities held by the EuroFund plus any cash or other assets (including interest and dividends accrued but not yet received) minus all liabilities (including accrued expenses) by the total number of shares outstanding at such time, rounded to the nearest cent. Expenses, including the fees payable to the EuroFund's investment adviser and any account maintenance and/or distribution fees payable to the EuroFund's distributor, are accrued daily.

[10] Under Section 1003(b)(iii), the Exchange may consider suspending or delisting the MITTS Securities if: (i) the aggregate market value or the principal amount of the MITTS Securities publicly held is less than $400,000; or (ii) the issuer is unable to meet its obligations on the MITTS Securities.

[11] The EuroFund consists of Class A, Class B, Class C, and Class D shares. Each class of shares represents an identical interest in the investment portfolio of the EuroFund and has the same rights. However, each class of shares varies with regard to: (i) sales charges; (ii) account maintenance fees; (iii) distribution fees; and (iv) conversion features.

[12] Holders of Class B shares receive the value of their shares plus cash dividends and distributions paid on those shares less fees. Holders of the MITTS Securities receive at maturity the principal amount of their investment plus a Supplemental Redemption Amount in the form of Class D shares (*see* Section II(c) *infra*, ''Maturity and Settlement of MITTS Securities'') based on the adjusted total return of Class B shares of the EuroFund which may be lower, due to the annual reduction factor, than what a holder of Class B EuroFund shares might receive. The Exchange has represented that an explanation of the annual reduction factor will be included in any marketing materials, fact sheets, or any other materials circulated to investors regarding the trading of MITTS Securities.

[13] The EuroFund Index is updated only at the close of trading each day because that is the only time when the EuroFund's NAV is determined and disseminated. The Exchange believes this should not pose an obstacle to the trading of the MITTS Securities, anymore than it prevents investors from entering intra-day orders to purchase or redeem shares of the EuroFund itself at a closing NAV that is unknown at the time the orders are entered.

[14] 17 CFR 270.22c–1.

[15] *See supra* note 11.

[16] The Supplemental Redemption Amount, which may not be less than zero, will equal the principal amount ($10) multiplied by the percentage difference between the ending value of the EuroFund Index and the starting value [$10 ((ending EuroFund Index value—starting EuroFund Index value)/starting EuroFund Index value)]. The ending and starting EuroFund Index values used to calculate the Supplemental Redemption Amount shall reflect the application of the annual reduction factor.

[17] The specified date shall be two business days prior to the stated maturity of the MITTS Securities. Telephone conversation between Sharon Lawson, Senior Special Counsel, Division of Market Regulation, Commission; Claire McGrath, Vice President and Special Counsel, Exchange; and Thomas Lee, Vice President of Customized Investments, Merrill Lynch & Co. (July 16, 1998).

[18] *See Exchange Rule 462, ''Minimum Margins.''*

[19] Exchange Rule 411, ''Duty to Know and Approve Customers,'' requires every Exchange member or member organization to ''use due diligence to learn the essential facts relative to every customer and to every order or account accepted.''

the time of making the recommendation, that the customer has such knowledge and experience in financial matters that they may be capable of evaluating the risks and the special characteristics of the recommended transaction, including those highlighted, and that the customer is financially able to bear the risks of the recommended transaction. Lastly, as with other structured products, the Exchange has stated that it will monitor closely the trading activity in the MITTS Securities to identify and deter any potential improper trading activity. In this regard, the Exchange has submitted an amendment that discusses in more detail surveillance for the MITTS Securities.[20]

III. Discussion

For the reasons discussed below, the Commission finds that the proposed rule change is consistent with the requirements of the Act and the rules and regulations thereunder applicable to a national securities exchange, and, in particular, with the requirements of Section 6(b)(5)[21] that the rules of an exchange market be designed to promote just and equitable principles of trade, to remove impediments to and perfect the mechanism of a free and open market and a national market system, and, in general, to protect investors and the public interest.[22] The Commission believes providing for exchange-trading of the MITTS Securities will offer investors a new and innovative means of participating in a mutual fund that invests in foreign securities. Specifically, the Commission believes that the MITTS Securities will permit investors to gain equity exposure in European exchange markets[23] while at the same time limiting the down side risk of their original investment as a result of the issuer's 100% principal guarantee.

The Commission recognizes that the MITTS Securities have certain characteristics that are similar to previously approved hybrid products linked to individual and/or indexes of securities. For example, like other market index target term securities, the MITTS Securities are not leveraged instruments.[24] Nevertheless, the Commission has not previously approved for listing and trading a hybrid product like the MITTS Securities that is physically settled and linked to a single, open-end investment company. In addition, the MITTS Securities linked to the EuroFund Index are unlike other previously approved market index target term securities because the final rate of return of the MITTS Securities is derivatively priced based upon the performance of a generally undisclosed portfolio of securities. Finally, the Commission notes that the MITTS Securities have raised potential conflict of interest concerns because the issuer of the MITTS Securities is an affiliate of the investment adviser to the EuroFund. The Commission believes that these factors, along with certain other features of the MITTS Securities, raise unique and novel issues.[25] As discussed in more detail below, the Commission believes that the Exchange and the issuer have adequately addressed these issues.

First, the Commission notes that the Exchange's rules and procedures addressing the special concerns attendant to the trading of hybrid securities will be applicable to the MITTS Securities. In particular, by imposing the hybrid listing standards, heightened suitability for recommendations in MITTS Securities, disclosure, and compliance requirements noted above, the Commission believes that the Exchange has adequately addressed the potential problems that could arise from the hybrid nature of the MITTS Securities. In addition, the Exchange will distribute an information circular to its membership calling attention to the specific risks associated with the MITTS Securities, as well as suitability requirements and compliance responsibilities. The circular also will highlight certain unusual features of the MITTS Securities including the annual reduction factor, the relationship between the issuer of the MITTS Securities and the investment adviser to the EuroFund, and the physical settlement in a class of shares different than the class underlying the EuroFund Index.[26]

Second, the MITTS Securities remain a non-leveraged product with the issuer guaranteeing 100% of principal return. The Commission realizes that the final payout on the MITTS Securities is dependent in part upon the individual credit of the issuer. To some extent, however, this credit risk is minimized by the Exchange's hybrid listing standards in Section 107A of the *Company Guide* which provide that only issuers satisfying substantial asset and equity requirements may issue securities such as MITTS Securities.[27] In addition, these standards require that the MITTS Securities have at least $4 million in aggregate market value. Furthermore, financial information regarding the issuer, as well as the MITTS Securities and the underlying EuroFund, that is required to be disclosed under the federal securities laws will be publicly available to investors.

Third, the history and performance of the EuroFund should be available through a variety of public sources. In particular, the EuroFund's NAV will be disseminated through the facilities of Nasdaq after the close of trading each business day. The Commission believes this information will be useful and beneficial for investors in the MITTS Securities. The Commission notes that the Exchange has represented that the value of the EuroFund Index will be calculated by the Exchange once each business day after the close of trading and after the NAV for the EuroFund has been reported. This value will be disseminated over the Consolidated Tape Association's Network B throughout the trading day and shall be updated again after the next close of trading when a new NAV is calculated and reported. The result of this is that the EuroFund Index value disseminated during the trading day is based on the prior day's NAV. The Commission generally believes that updating values on a real-time basis throughout the trading day is essential to any securities

[20] *See* Amendment No. 1 *supra* note 4, and discussion *infra*.

[21] 15 U.S.C. 78f(b)(5).

[22] In approving this proposed rule change, the Commission notes that it has considered the proposal's impact on efficiency, competition, and capital formation. 15 U.S.C. 78c(f).

[23] The EuroFund can invest in Western or Eastern European exchange markets. According to information provided by Amendment No. 1, the five most recent semi-annual reports filed by the EuroFund pursuant to Section 30(e) of the Investment Company Act of 1940 indicate that on average, 96.38% of the EuroFund's assets were invested in Western European countries.

[24] Certain characteristics of the MITTS Securities being approved herein more closely resemble equity linked notes under Section 107B of the Exchange's *Company Guide* rather than market index target term securities listed under Section107A for ''Other Securities.'' Generally, equity linked notes are based on the performance of one security, either a common stock or non-convertible preferred stock, and are settled in the underlying linked security. Market index target term securities, on the other hand, have traditionally measured the performance of a known portfolio of securities and are generally cash settled. Because equity linked notes listed under Section 107B of the Exchange's *Company Guide* can only overlie common stock or non-convertible preferred stock, the Exchange has appropriately relied on its broader ''Other Securities'' listing standard for the listing of the MITTS Securities.

[25] For example, the settlement value of the MITTS Securities is based on changes in one class of EuroFund shares while the holder will receive settlement in another class.

[26] Telephone conversation between Sharon Lawson, Senior Special Counsel, Division of Market Regulation, Commission; and Scott Van Hatten, Legal Counsel, Exchange (Aug. 24, 1998).

[27] *See supra* note 8.

product.[28] Nevertheless, the Commission believes that disseminating the static value of the EuroFund Index is acceptable because the EuroFund's NAV is only available once a day after the close of trading, and the portfolio of securities held by the EuroFund is not publicly available and is not disclosed on a real-time, intra-day basis.[29]

Fourth, as discussed above, the settlement value of the MITTS Securities is based on changes in one class of EuroFund shares while the holder will receive physical settlement in another class. This is an unusual feature of the MITTS Securities. Nevertheless, because the differences among the EuroFund classes are not related to the portfolio held by the EuroFund, but instead appear to be related to differences in fees and this fact has been disclosed and will be highlighted in the Exchange's information circular to members, the Commission believes any concerns about this feature have been adequately addressed.

Finally, the Commission believes that the Exchange and the issuer of the MITTS Securities have adequately addressed the potential manipulation concerns raised by the listing and trading of the MITTS Securities.[30] First, as previously noted, the issuer of the MITTS Securities is an affiliate of the investment adviser to the underlying EuroFund. The Commission believes that the Exchange, the issuer of the MITTS Securities, and the investment adviser to the EuroFund have established adequate safeguards to ensure the integrity of the MITTS Securities and the EuroFund. In particular, Merrill Lynch & Co. has represented that its wholly owned affiliate, Merrill Lynch Asset Management (the investment adviser to the EuroFund), does not provide information with respect to the investments contained in the EuroFund to any proprietary trading operations of its Merrill Lynch affiliates or employees engaged in such trading operations, except at such time as such information is disseminated to the public-at-large. Further, any such dissemination is effected in compliance with applicable laws including the Investment Company Act of 1940. Merrill Lynch & Co. has also represented that Merrill Lynch Asset Management maintains adequate procedures to assure compliance with this policy. These informational barrier procedures, as represented, should help prevent and deter the misuse of any informational advantages with respect to changes in the securities held by the EuroFund.

Secondly, the Exchange has developed surveillance procedures to monitor trading activity in the MITTS Securities and EuroFund shares and will examine trading activity in the component stocks of the EuroFund if necessary. In this regard, the Exchange has noted that based on previous disclosure, the EuroFund invests a substantial percentage of its assets in companies that are domiciled in countries with which the Exchange or the Commission has information sharing agreements.[31] Further, the Commission notes that the size of the EuroFund in comparison to the MITTS Securities offering, coupled with the fact that the securities held by the EuroFund are only disclosed semi-annually and the EuroFund is a diversified investment company under the Investment Company Act of 1940,[32] reduces concerns that the EuroFund's underlying portfolio would be manipulated to affect the MITTS Securities.[33] Nevertheless, the Exchange has states it will be able to monitor activity in the securities held by the EuroFund if necessary.

The Commission has also been concerned that the price of the MITTS Securities may be improperly influenced by large redemptions or purchases of shares in the EuroFund, especially near the date of settlement and valuation. The Commission believes that this concern has been reduced by certain factors such as the size of the EuroFund in relation to the MITTS Securities offering, and the EuroFund's practice of maintaining a cash position to avoid having to immediately liquidate assets to cover redemptions.[34] Nevertheless, the Exchange has committed to monitor trading activity in the MITTS Securities and shares of the EuroFund, and has stated it will be able to obtain, if necessary, the identity of investors who have made EuroFund redemptions if it detects unusual trading activity in the MITTS Securities.

Based on the above, the Commission believes the Exchange has developed adequate surveillance procedures to monitor trading activity in the MITTS Securities and shares of the EuroFund. The Exchange's surveillance procedures, in combination with the policies outlined by Merrill Lynch & Co., should help to deter and detect any potentially inappropriate or manipulative trading activity in the MITTS Securities, or in the EuroFund shares or the securities held by the EuroFund that affects the MITTS Securities.[35]

The Commission finds good cause to approve Amendment No. 1 to the proposed rule change prior to the thirtieth day after the date of publication of notice of filing thereof in the **Federal Register**. Amendment No. 1 provides additional information concerning the surveillance procedures the Exchange will employ to monitor trading activity in the MITTS Securities and shares of the EuroFund. The information provided by Amendment No. 1 strengthens the Exchange's proposal and indicates the Exchange is committed to monitoring trading activity in the MITTS Securities and EuroFund shares and has implemented procedures capable of detecting unusual trading activity that is designed to affect the price of such securities. Accordingly, the Commission believes that it is consistent with Section 6(b)(5)

[28] *See e.g.*, Securities Exchange Act Release Nos. 38940 (Aug. 15, 1997), 62 FR 44735 (Aug. 22, 1997); 38819 (July 7, 1997), 62 FR 37320 (July 11, 1997); and 37744 (Sept. 27, 1996), 61 FR 52480 (Oct. 7, 1996).

[29] As discussed in its order approving the listing and trading of options on the Lipper Analytical/Salomon Brothers Growth and Growth & Income Fund Indexes, the Commission recognizes that only an investment adviser should have knowledge of a fund's component securities and their values on a regular basis throughout the trading day. In accordance with the Investment Company Act of 1940, we note that information regarding the securities held by the EuroFund will only be generally available to the public on a semi-annual basis and all investors should have equal access to this information when it is disseminated. *See* discussion *infra* on informational barriers. Unless certain factors are present, the Commission may determine it is not appropriate to allow a product to trade without real-time dissemination of values. *See* Securities Exchange Act Release No. 39244 (Oct. 15, 1997), 62 FR 55289 (Oct. 23, 1997).

[30] The Commission notes that by approving this proposed rule change the Commission is not approving the EuroFund Index for options or warrants trading.

[31] According to information provided by Amendment No. 1, the five most recent semi-annual reports filed by the EuroFund pursuant to Section 30(e) of the Investment Company Act of 1940 indicate that on average, 77.46% of the EuroFund's assets were invested in countries where the Exchange or the Commission has in place a comprehensive surveillance sharing agreement.

[32] With respect to 75% of its assets, the EuroFund is prohibited from investing more than 5% of its assets in the securities of a single issuer. In addition, Amendment No. 1 notes that based on the EuroFund's most recent semi-annual disclosures, it appears the EuroFund held between 106 to 138 securities, and that each quarter the make-up of the EuroFund's portfolio changed between 22% to 50%.

[33] *See* Amendment No. 1 *supra* note 4.

[34] *Id.*

[35] The Commission notes that its conclusions on the MITTS Securities are based on a variety of factors including the size of the MITTS Securities offering in relation to the size of the underlying EuroFund. A similar type of market index target term security on a different open-end mutual fund may raise new or novel issues and may have to be separately reviewed under Section 19(b) of the Act.

of the Act[36] to approve Amendment No. 1 to the proposed rule change on an accelerated basis.

Interested persons are invited to submit written data, views, and arguments concerning Amendment No. 1 to the proposal, including whether the proposed rule change as supplemented by Amendment No. 1 is consistent with the Act. Persons making written submissions should file six copies thereof with the Secretary, Securities and Exchange Commission, 450 Fifth Street, NW, Washington, DC 20549. Copies of the submissions, all subsequent amendments, all written statements with respect to the proposed rule change that are filed with the Commission, and all written communications relating to the proposed rule change between the Commission and any persons, other than those that may be withheld from the public in accordance with the provisions of 5 U.S.C. 552, will be available for inspection and copying at the Commission's Public Reference Section, 450 Fifth Street, NW, Washington, DC 20549. Copies of such filing also will be available for inspection and copying at the principal office of the Exchange. All submissions should refer to File No. SR–Amex–98–24 and should be submitted by September 24, 1998.

IV. Conclusion

It is therefore ordered, pursuant to Section 19(b)(2) of the Act,[37] that the proposed rule change (SR–Amex–98–24), as supplemented by Amendment No. 1, is approved.

For the Commission, by the Division of Market Regulation, pursuant to delegated authority.[38]

Jonathan G. Katz,

Secretary.

[FR Doc. 98–23764 Filed 9–2–98; 8:45 am]

BILLING CODE 8010–01–M

[36] 15 U.S.C. 78f(b)(5).

[37] 15 U.S.C. 78s(b)(2).

[38] 17 CFR 200.30–3(a)(12).

SECURITIES AND EXCHANGE COMMISSION

[Release No. 34–40369; File No. SR–CHX–98–13]

Self-Regulatory Organizations; Chicago Stock Exchange, Inc.; Order Approving Proposed Rule Change Relating to the Exchange's Clearing the Post Policy

August 26, 1998.

I. Introduction

On June 10, 1998, the Chicago Stock Exchange, Inc. (''CHX'' or ''Exchange'') filed with the Securities and Exchange Commission (''SEC'' or ''Commission''), pursuant to Section 19(b)(1) of the Securities Exchange Act of 1934 (''Act''),[1] and Rule 19b–4 thereunder,[2] a proposed rule change to make the Exchange's clearing the post policy permanent.[3] The proposed rule change was published for comment in the **Federal Register** on July 16, 1998.[4] The Commission received no comments on the proposal.

II. Description of the Proposal

The Exchange proposes to amend interpretation and policy .02 of CHX Rule 10 of Article XX and amend CHX Rule 11 of Article XX relating to clearing the post and to make permanent the policy contained in Article XX, Rule 11 regarding the ability of oral bids and offers on cabinet securities[5] to clear the post by phone. Prior to the pilot program's approval, the Exchange's clearing the post policy required a floor broker or market maker to clear the post by his or her physical presence at the post. The proposed rule change does not require the floor broker's or market maker's physical presence to clear the post. Instead, a floor broker or market maker may clear the post by phone. The bids and offer made to clear the post by phone are audibly announced at the cabinet post through a speaker system maintained by the Exchange.

The proposed rule change will also expand the clearing the post policy to bids and offers in all securities traded on the trading floor. Interpretation and policy .02 of CHX Rule 10 of Article XX, as amended, will allow a floor broker or market maker to clear the post by phone for bids and offers in any security traded on the trading floor provided they are audibly announced at the post through a speaker system maintained by the Exchange, and the floor broker or market maker is physically present on the Exchange floor.

III. Discussion

After careful review, the Commission finds that the proposed rule change is consistent with the requirements of the Act, and the rules and regulations thereunder applicable to a national securities exchange. The Commission believes that the proposed rule change is consistent with Section 6 of the Act, in general,[6] and Section 6(b)(5),[7] in particular, in that it is designed to promote just and equitable principles of trade to prevent fraudulent and manipulative acts and practices, to foster cooperation and coordination with persons engaged in regulating and facilitating transactions in securities, to remove impediments to and perfect the mechanism of a free and open market and a national market system, and, in general, to protect investors and the public interest.[8]

The Commission believes that allowing floor brokers or market makers to clear the post for cabinet securities while remaining at their post will ensure that these floor brokers or market makers will be at their post when they need to respond to orders in more liquid securities at a much faster pace. The Commission also believes that expending the policy to all securities traded on the trading floor, provided that the bid or offer is audibly announced at the post and floor broker or market maker is physical present on the Exchange floor, is consistent with the Act. Expanding the policy should extend the efficiencies experienced during the clearing the post for cabinet securities pilot program to all securities on the CHX floor.[9] The Commission

[1] 15 U.S.C. 78s(b)(1).

[2] 17 CFR 240.19b–4.

[3] *See* Securities Exchange Act Release Nos. 39519 (January 6, 1998), 63 FR 1985 (January 13, 1998) (order approving proposed rule change CHX–97–28 amending the Exchange's clearing the post policy for cabinet securities for a six-month pilot program) and 40144 (June 30, 1998), 63 FR 27157 (July 9, 1998) (order approving proposed rule change CHX–98–17 extending the Exchange's pilot program relating to the clearing the post policy for cabinet securities for a five-month period or until the approval of the instant proposed rule change).

[4] *See* Securities Exchange Act Release No. 40187 (July 9, 1998), 63 FR 38442.

[5] A cabinet security is any security that is either listed or available to be traded on the CHX pursuant to unlisted trading privileges that is not assigned a specialist. Telephone conversation between Andrea Svehala, Manager, Equity Floor Surveillance, CHX, and Marc McKayle, Attorney, Division of Market Regulation, Commission (July 24, 1998).

[6] 15 U.S.C. 78f.

[7] 15 U.S.C. 78f(b)(5).

[8] In approving this rule, the Commission has considered the proposed rule's impact on efficiency, competition, and capital formation. 15 U.S.C. 78c(f).

[9] The CHX submitted a report to the Commission representing that the policy has been well received by the floor brokers and market makers of the

believes that the proposed rule change should augment the ability of floor brokers and market makers to respectively seek best price execution for orders and provide depth and liquidity to the Exchange market.

IV. Conclusion

It is therefore ordered, pursuant to Section 19(b)(2) of the Act,[10] that the proposed rule change (SR–CHX–98–19) is approved.

For the Commission, by the Division of Market Regulation, pursuant to delegated authority.[11]

Jonathan G. Katz,

Secretary.

[FR Doc. 98–23765 Filed 9–2–98; 8:45 am]

BILLING CODE 8010–01––M

SECURITIES AND EXCHANGE COMMISSION

[Release No. 34–40368; File No. SR–DTC–97–21]

Self-Regulatory Organizations; The Depository Trust Corporation; Order Approving a Proposed Rule Change Relating to Modification of Processing Bankers' Acceptances

August 26, 1998.

On October 14, 1997, The Depository Trust Corporation (''DTC'') filed with the Securities and Exchange Commission (''Commission''), and on November 6, 1997, and February 23, 1998, amended a proposed rule change (File No. SR–DTC–97–21) pursuant to Section 19(b)(1) of the Securities Exchange Act of 1934 (''Act'').[1] Notice of the proposal was published in the **Federal Register** on April 21, 1998.[2] No comment letters were received. For the reasons below, the Commission is approving the proposed rule change.

I. Description

In 1994, the Commission approved an expansion of DTC's money market instruments (''MMI'') settlement program to include, among other things, BAs,[3] which allowed DTC to process non-fungible BAs.[4] The purpose of the proposed rule change is to modify DTC's procedures to allow an accepting bank, at its option, to assign one CUSIP number to a bundle of its BAs that are issued at a discount and that have the same maturity date. DTC will treat all such BAs assigned the same CUSIP number as fungible.

Under existing practices in the BA market, an issuing bank and an investor may agree that a single issuance transaction can be settled by the bank's delivery of a bundle of drafts, which may involve different drawers, different underlying transactions, different goods, or different countries of origin or destination, so long as each component draft has been accepted by the issuing bank and has the same maturity date. The program for processing BAs will reflect industry practice by permitting an issuing bank to settle a single issuance transaction by book-entry delivery of interests in a bundle of drafts accepted by the bank, maturing on the same date, and identified by a single CUSIP number.

Subsequent to the initial issuance of these fungible BAs, the issuing bank may increase the total amount of the issue outstanding by including additional accepted drafts of the same or longer tenure as the other component drafts.[5] Similarly, the issuing bank may substitute for a component draft of an outstanding issue of fungible BAs another accepted component draft having the same or longer maturity date. DTC will make available to participants though its Participant Terminal System information about the features (*e.g.*, identity of drawer, goods, country of origin, and destination) of each component draft of fungible BAs that has been provided by the bank's issuing agent as of the date of the inquiry.

Market participants will remain responsible for complying with regulations of the U.S. Treasury Department's Office of Foreign Assets Control (''OFAC'') as they pertain to DTC-eligible BAs. In providing issuance instruction to DTC, the bank's issuing agent will be required to acknowledge that the issuance complies with OFAC regulations. The acknowledgement shall constitute a representation that the issuing agent maintains an appropriate system for assuring compliance with OFAC regulations and that the subject issuance complies with those regulations.

The bank's issuing agent will also be required to indicate in the issuance instructions whether or not the BAs being issued are eligible for purchase and discount at a federal reserve bank. DTC will make the information available to participants but will not verify the accuracy of information provided by the issuing agent with respect to the BAs. DTC will not be liable for any loss related to the accuracy or completeness of information about BAs made available by it.

In the event of the accepting bank's insolvency, DTC's MMI program procedures relating to MMI issuer insolvency will apply. Furthermore, in order to put participants in a position to independently pursue claims against the bank or any other party (*e.g.*, the drawer of an accepted draft), DTC will seek to have accepted drafts which had been made payable or endorsed to DTC's nominee, Cede & Co., at the time the BAs were first issued, exchanged for accepted drafts made payable or endorsed to each participant having a position in each issue of the bank's BAs.[6] If DTC is unable to arrange for such exchanges, DTC will act with respect to matters involving each issue of BAs (*i.e.*, CUSIP) in accordance with the written instructions of the participants having sixty-six and two-thirds percent or more of the total position in that issue.

As with other types of financial instruments in DTC's MMI program, BAs rated in one of the top two ratings categories by at least one of the largest bank-debt rating agencies and investment grade or above by other rating agencies will receive a two percent haircut from market price for purposes of collateral valuation. BAs rated as investment grade only by the ratings agencies will receive a five percent haircut and all lower-rated or unrated BAs will receive a 100 percent haircut (resulting in zero collateral value). BAs that are in default will not be eligible for deposit at DTC.

II. Discussion

Section 17A(b)(3)(F) of the [7] requires that the rules of a clearing agency be designed to assure the safeguarding of securities and funds in this custody or

---

Exchange, and that no adverse effects have been experienced since the implementation of the pilot program. The report was filed pursuant to Securities Exchange Act Release No. 39519 (January 6, 1998), 63 FR 1985 (January 13, 1998) (order approving amendment to the Exchange's clearing the post policy for cabinet securities). *See* Report on the Effectiveness of the Pilot Program for Clearing the Cabinet Post by Phone, dated June 5, 1998.

[10] 15 U.S.C. 78s(b)(2).

[11] 17 CFR 200.30–3(a)(12).

[1] 15 U.S.C. 78s(b)(1).

[2] Securities Exchange Act Release No. 39861 (April 14, 1998), 63 FR 19772.

[3] Securities Exchange Act Release Nos. 33958 (April 22, 1994), 59 FR 22879 (order approving proposal on temporary basis); and 35655 (April 28, 1995), 60 FR 22423 (extension of temporary approval).

[4] Non-fungible BAs consist of those with only one underlying customer, draft, and accepting bank. A CUSIP number is assigned to each BA as opposed to a bundle of BAs, as is currently proposed by the rule change.

[5] Where the component drafts have different maturity dates, the bank issuing fungible BAs will be required to pay full maturity on the earliest date that the component draft matures.

[6] A participant having a position on DTC's books in an issue of fungible BAs accepted by the insolvent bank would receive component drafts with each draft in an amount proportional to the participant's position in that issue.

[7] 15 U.S.C. 78sq–1(b)(3)(F).

control of the clearing agency or for which it is responsible. The Commission believes that the proposed rule change is consistent with DTC's obligations under Section 17A(b)(3)(F) because it provides a more efficient manner in which industry participants may process BA transactions while potentially reducing the risks associated with current industry processing methods. Furthermore, DTC has put in place sufficient safeguards to protect the interests of other DTC participants engaged in the clearance and settlement of securities.[8]

The Commission previously examined the risk management features of the MMI program when DTC proposed to add it to DTC's Same-Day Funds Settlement system[9] and when permanent approval was sought.[10] At those times, the Commission found and continues to believe that the risk management controls adopted by DTC are sufficient to address the risks associated with processing BAs. Furthermore, with the inclusion of DTC's additional risk management efforts incorporated by this rule, namely requiring OFAC compliance and establishing insolvency procedures, the Commission believes that any additional risks that may arise as a result of DTC processing fungible BAs are also sufficiently addressed.

III. Conclusion

On the basis of the foregoing, the Commission finds that the proposal is consistent with the requirements of the Act and in particular with the requirements of Section 17A of the Act and the rules and regulations thereunder.

It is therefore ordered, pursuant to Section 19(b)(2) of the Act, that the proposed rule change (File No. SR–DTC–97–21) be and hereby is approved.

For the Commission by the Division of Market Regulation, pursuant to delegated authority.[11]

Jonathan G. Katz,

Secretary.

[FR Doc. 98–23766 Filed 9–2–98; 8:45 am]

BILLING CODE 8010–01–M

[8] DTC's BA program has been designed in consultation with and with the approval of the Federal Reserve Bank of New York.

[9] *Supra* note 3.

[10] *Id.*

[11] 17 CFR 200.30–3(a)(12).

SECURITIES AND EXCHANGE COMMISSION

[Release No. 34–40379; File No. SR–NASD–98–58]

Self-Regulatory Organizations; Notice of Filing of Proposed Rule Change by National Association of Securities Dealers, Inc. Relating to the Elimination of the Requirement for Personal Service of Decisions in Cases Involving Bars and Expulsions

August 27, 1998.

Pursuant to Section 19(b)(1) of the Securities Exchange Act of 1934 (''Act''),[1] and Rule 19b–4 thereunder,[2] notice is hereby given that on August 7, 1998, the National Association of Securities Dealers, Inc. (''NASD''), through its regulatory subsidiary, NASD Regulation, Inc. (''NASD Regulation''), filed with the Securities and Exchange Commission (''SEC'' or ''Commission'') the proposed rule change as described in Items I, II, and III below, which Items have been prepared by NASD Regulation. The filing was subsequently amended on August 18, 1998 and August 20, 1998.[3] The Commission is publishing this notice to solicit comments on the proposed rule change, as amended, from interested persons.

I. Self-Regulatory Organization's Statement of the Terms of Substance of the Proposed Rule Change

NASD Regulation is proposing to amend Rules 9269 and 9360 of the Code of Procedure of the NASD, to eliminate the requirement for personal service of decisions in cases involving bars and expulsions.[4] The text of the proposed rule change is set forth below. Proposed new language is in italics; proposed deletions are in brackets.

* * * * *

9000. Code of Procedure

9200. Disciplinary Proceedings

9269. Default Decisions

(a) through (c).
No change.

(d) Final Disciplinary Action of the Association; Effectiveness of Sanctions.

If a default decision is not appealed pursuant to Rule 9311 or called for review pursuant to Rule 9312 within 25 days after the date the Office of Hearing Officers serves it on the Parties, the default decision shall become the final disciplinary action of the Association for purposes of SEC Rule 19d–1(c)(1). Unless otherwise provided in the default decision, the sanctions shall become effective 30 days after the default decision becomes the final disciplinary action of the Association, except that a bar or expulsion shall become effective immediately upon the default decision becoming the final disciplinary action of the Association. *The Association shall serve the decision on a Respondent by overnight courier, facsimile or other means likely to obtain prompt service when the sanction is a bar or an expulsion.*

* * * * *

9360. Effectiveness of Sanctions

Unless otherwise provided in the decision issued under Rule 9349 or Rule 9351, a sanction (other than a bar or an expulsion) specified in a decision constituting final disciplinary action of the Association for purposes of SEC Rule 19d–1(c)(1) shall become effective [on a date established by the Chief Hearing Officer, which shall not be earlier than] 30 days after the date of service of the decision constituting final disciplinary action. A bar or an expulsion shall become effective upon service of the decision constituting final disciplinary action of the Association for purposes of SEC Rule 19d–1(c)(1), unless otherwise specified therein. The Association shall [take reasonable steps to obtain personal service of] *serve the decision on* a Respondent *by overnight courier, facsimile or other means reasonably likely to obtain prompt service* when the sanction is a bar or an expulsion.

* * * * *

II. Self-Regulatory Organization's Statement of the Purpose of, and Statutory Basis for, the Proposed Rule Change

In its filing with the Commission, NASD Regulation included statements concerning the purpose of and basis for the proposed rule change and discussed any comments it received on the proposed rule change. The text of these statements may be examined at the places specified in Item IV below. NASD Regulation has prepared summaries, set forth in Sections A, B,

[1] 15 U.S.C. 78s(b)(1).

[2] 17 CFR 240.19b–4.

[3] *See* Letter from Joan C. Conley, Secretary, NASD Regulation, to Katherine A. England, Assistant Director, Division of Market Regulation, Commission, dated August 18, 1998 and E-mail from Eric Moss, Office of General Counsel, NASD Regulation, to Mandy Cohen, Division of Market Regulation, Commission, dated August 20, 1998. All amendments are included in this Notice.

[4] NASD Regulation has also filed a related rule change with the Commission in Exchange Act Release No. 40378 (August 7, 1998) (File No. SR–NASD–98–57). The text of the proposed rule change contained herein treats SR–NASD–98–57 as already having been approved.

and C below, of the most significant aspects of such statements.

A. Self-Regulatory Organization's Statement of the Purpose of, and Statutory Basis for, the Proposed Rule Change

1. Purpose

The proposed change to Rules 9269 and 9360 would establish that in cases involving bars or expulsions, service of decisions should be done by overnight courier, facsimile or other means likely to obtain prompt service. Rule 9269 does not presently contain language addressing the means by which service of default decisions in cases involving bars and expulsions should be accomplished. Rule 9360 currently requires that the Chief Hearing Officer serve all final disciplinary decisions, and that reasonable efforts be made to personally serve (hand delivery) all final decisions imposing a bar or expulsion. Rule 9360's personal service provision for final decisions imposing bars or expulsions was created because these decisions become effective immediately.

The Association believes that with respect to final default decisions imposing bars or expulsions, reasonable efforts at personal service (hand delivery) generally would not be successful. Default decisions are often entered because respondents cannot be located. If and when such respondents become aware that a default has been entered against them, Rule 9269(c) provides an expeditious means for such respondents to move to set aside the default decision.

2. Statutory Basis

NASD Regulation believes that the proposed rule change is consistent with the provisions of Section 15A(b)(6) of the Act, which requires, among other things, that the Association's rules be designed to prevent fraudulent and manipulative acts and practices, to promote just and equitable principles of trade, and, in general, to protect investors and the public interest. The NASD believes that the proposed rule change is consistent with Section 15A(b)(7) in that it provides for reasonable means to notify parties of default decisions. The rule change is consistent with Section 15A(b)(8) in that it furthers the statutory goals of providing a fair procedure for disciplining members and persons associated with members.

B. Self-Regulatory Organization's Statement on Burden on Competition

NASD Regulation does not believe that the proposed rule change will result in any burden on competition that is not necessary or appropriate in furtherance of the purposes of the Act, as amended.

C. Self-Regulatory Organization's Statement on Comments on the Proposed Rule Change Received From Members, Participants, or Others

Written comments were neither solicited nor received.

III. Date of Effectiveness of the Proposed Rule Change and Timing for Commission Action

Within thirty-five days of the date of publication of this notice in the **Federal Register** or within such longer period (i) as the Commission may designate up to ninety days of such date if it finds such longer period to be appropriate and publishes its reasons for so finding or (ii) as to which the self-regulatory organization consents, the Commission will:

(A) by order approve such proposed rule change, or

(B) institute proceedings to determine whether the proposed rule change should be disapproved.

IV. Solicitation of Comments

Interested persons are invited to submit written data, views, and arguments concerning the foregoing, including whether the proposed rule change is consistent with the Act. Persons making written submissions should file six copies thereof with the Secretary, Securities and Exchange Commission, 450 Fifth Street, NW., Washington, DC 20549. Copies of the submission, all subsequent amendments, all written statements with respect to the proposed rule change that are filed with the Commission, and all written communications relating to the proposed rule change between the Commission and any person, other than those that may be withheld from the public in accordance with the provisions of 5 U.S.C. 552, will be available for inspection and copying in the Commission's Public Reference Room. Copies of such filing will also be available for inspection and copying at the principal office of the NASD. All submissions should refer to the file number SR–NASD–97–58 and should be submitted by September 24, 1998.

For the Commission, by the Division of Market Regulation, pursuant to delegated authority.[5]

Jonathan G. Katz,

Secretary.

[FR Doc. 98–23762 Filed 9–2–98; 8:45 am]

BILLING CODE 8010–01–M

[5] 17 CFR 200.30–3(a)(12).

SECURITIES AND EXCHANGE COMMISSION

[Release No. 34–40372; File No. SR–NASD–98–52]

Self-Regulatory Organizations; Notice of Filing of Proposed Rule Change and Amendment No. 1 Thereto by the National Association of Securities Dealers, Inc. Relating to Supervision of Correspondence

August 27, 1998.

Pursuant to Section 19(b)(1) of the Securities Exchange Act of 1934 (''Act''),[1] and Rule 19b–4 thereunder,[2] notice is hereby given that on July 24, 1998, the National Association of Securities Dealers, Inc. (''NASD'' or ''Association''), through its wholly-owned subsidiary, NASD Regulation, Inc. (''NASDR''), filed with the Securities and Exchange Commission (''SEC'' or ''Commission'') the proposed rule change as described in Items I, II, and III below, which Items have been prepared by the NASDR. The NASDR has designated the portion of the proposal relating to the extension of the effective date as one constituting a stated policy, practice, or interpretation with respect to the meaning of an existing rule under Section 19(b)(3)(A)(i) of the Act,[3] which renders the rule effective upon the Commission's receipt of this filing. On August 26, 1998, the NASDR submitted Amendment No. 1 to the proposed rule change.[4] The Commission is publishing this notice to solicit comments on the proposed rule change from interested persons.

I. Self-Regulatory Organization's Statement of the Terms of Substance of the Proposed Rule Change

The NASDR is proposing to amend NASD Rule 3010 to state that firms must[5] review incoming, non-electronic correspondence to identify customer complaints and funds. Below is the text of the proposed rule change. Proposed

[1] 15 U.S.C. 78s(b)(1).

[2] 17 CFR 240.19b–4.

[3] 15 U.S.C. 78s(b)(3)(A)(i).

[4] *See* Letter from Mary N. Revell, Associate General Counsel, NASDR, to Katherine A. England, Assistant Director, Division of Market Regulation, Commission, dated August 24, 1998 (''Amendment No. 1''). In Amendment No. 1, NASDR proposes to replace the word ''should'' in the text of the proposed rule with the word ''must'' to clarify that NASD member firms are required to develop written procedures for the review of incoming, non-electronic correspondence directed to registered representatives for purposes of identifying and handling customer complaints and funds.

[5] *See* Amendment No. 1, *supra* note 4.

new language is italicized, proposed deletions are in brackets.

CONDUCT RULES

Rule 3010. Supervision

(a) through (c) No change

(d) Review of Transactions and Correspondence

(1) No Change

(2) Review of correspondence. Each member shall develop written procedures that are appropriate to its business, size, structure, and customers for the review of incoming and outgoing written and electronic correspondence with the public relating to its investment banking or securities business. *The procedures must include review of incoming, non-electronic correspondence directed to registered representatives for purposes of properly identifying and handling customer complaints and funds.* Where such procedures for the review of correspondence do not require [pre-use] review of all correspondence *prior to use or distribution,* they must include provision for the education and training of associated persons as to the firm's procedures governing correspondence; documentation of such education and training; and surveillance and follow-up to ensure that such procedures are implemented and adhered to.

(3) No change

(e) through (g) No change

II. Self-Regulatory Organization's Statement of the Purpose of, and Statutory Basis for, the Proposed Rule Change

In its filing with the Commission, the NASDR included statements concerning the purpose of and basis for the proposed rule change and discussed any comments it received on the proposed rule change. The text of these statements may be examined at the places specified in Item IV below. The NASDR has prepared summaries, set forth in sections A, B and C below, of the most significant aspects of such statements.

A. Self-Regulatory Organization's Statement of the Purpose of, and Statutory Basis for, the Proposed Rule Change

1. Purpose

In December 1997, the SEC approved rule amendments and a Notice to Members that were designed to allow firms to develop flexible supervisory procedures for the review of correspondence with the public.[6] The amendments were intended to recognize the growing use of electronic communications such as ''e-mail'' while still providing for effective supervision. Notice to Members 98–11, issued in January 1998, announced approval of the rule amendments, the effective date of the new rules, and provided guidance to firms on how to implement these rules. Subsequent to SEC approval of the amendments, but before the amended rules went into effect, the SEC received 14 comment letters objecting to certain provisions in the new rules, primarily from members in the insurance industry.[7] The commenters primarily objected to a provision in Notice to Members 98–11, which states that firms will be required to review all incoming correspondence received in non-electronic format directed to registered representatives and related to a member's investment banking or securities business. The NASDR added this provision to Notice to Members 98–11 to address two regulatory concerns raised by the SEC: (1) Ensuring that firms capture all customer complaints; and (2) preventing registered representatives from taking cash or checks out of customer letters.

The commenters stated that it will be very difficult or impossible for a registered principal to conduct a pre-distribution review of all incoming, non-electronic correspondence, particularly correspondence received by registered representatives in small, one- or two-person offices. In response to these concerns, the effective date of the requirement to review all incoming, non-electronic correspondence was delayed to allow the NASDR and member firms time to develop and implement alternative, workable procedures for the review of incoming, non-electronic correspondence that addresses the regulatory concerns about preventing misappropriation of customer funds and diversion of customer complaints.[8] The rule amendments and all other provisions in the Notice became effective on April 7, 1998.[9]

NASD Rule 3010(d)(2) currently requires each member to develop written policies and procedures for review of correspondence with the public relating to its investment banking or securities business tailored to its structure and the nature and size of its business and customers. The NASDR proposes to amend the rule to state that these procedures must include review of incoming, non-electronic correspondence directed to registered representatives for purposes of properly identifying and handling customer complaints and funds. This proposed amendment will clarify that firms must develop supervisory procedures that specifically address the regulatory concerns identified by the SEC.

The Notice to Members will provide guidance on how to implement the proposed rule change. In particular, the Notice states that, in conducting reviews of incoming non-electronic correspondence to identify customer complaints and funds, where the office structure permits review of all correspondence, members should designate a registered or associated person to open and review correspondence. The designated person must not be supervised or under the control of the registered person whose correspondence is opened and reviewed. Unregistered persons who have received sufficient training to enable them to identify complaints and checks would be permitted to review correspondence. These guidelines are designed to correspond to procedures currently followed by many large, multi-service firms.

Where the office structure does not permit this arrangement, the Notice states that the firm would have to employ alternative procedures reasonably designed to assure adequate handling of complaints and checks. Procedures that could be adopted include the following:

- Forwarding incoming correspondence related to the firm's investment banking or securities

[6] See Securities Exchange Act Release No. 39510 (December 31, 1997) 63 FR 1131 (January 8, 1998).

[7] *See* Letters from Carl B. Wilkerson, American Council of Life Insurance, to Jonathan G. Katz, Secretary, SEC, dated January 9, 1998 and January 29, 1998; Beverly A. Byrne, BenefitsCorp Equities, Inc., to Jonathan G. Katz, Secretary, SEC, dated January 26, 1998; Michael S. Martin, The Equitable Life Assurance Society of the United States, to Jonathan G. Katz, SEC, dated January 29, 1998; Janet G. McCallen, International Association for Financial Planning, to Jonathan G. Katz, Secretary, SEC, dated February 13, 1998; W. Thomas Boulter, Jefferson Pilot Financial, to Jonathan G. Katz, Secretary, SEC, dated January 28, 1998; Leonard M. Bakal, Metropolitan Life Insurance Company and MetLife Securities, Inc., to Jonathan G. Katz, Secretary, SEC, dated January 28, 1998; Michael L. Kerley, MML Investors Services, Inc. to Secretary, SEC, dated January 26, 1998; Mark D. Johnson, The National Association of Life Underwriters, to Jonathan G. Katz, Secretary, SEC, dated February 5, 1998; Theodore Mathas, NYLIFE Securities, to Jonathan G. Katz, Secretary, SEC, dated January 16, 1998 and January 29, 1998; Beverly A. Byrne, One Orchard Equities, Inc., to Jonathan G. Katz, Secretary, SEC, dated January 26, 1998; Dodie Kent, Pruco Securities Corporation, to Jonathan G. Katz, Secretary, SEC, dated January 29, 1998; and James T. Bruce, Wiley, Rein & Fielding, on behalf of the Electronic Messaging Association, to Jonathan G. Katz, SEC, dated January 30, 1998.

[8] *See* Securities Exchange Act Release Nos. 39665 (February 13, 1998) 63 FR 9032 (February 23, 1998); 39866 (April 14, 1998) 63 FR 19778 (April 21, 1998); and 40178 (July 7, 1998) 63 FR 37911 (July 14, 1998).

[9] *See* Securities Exchange Act Release No. 39866, *supra* note 8.

business to an Office of Supervisory Jurisdiction (OSJ) or a branch manager for review on a weekly basis;

- Maintenance of a separate log for all checks received and products sold, which is forwarded to the supervising branch on a weekly basis;
- Communication to clients that informs them that questions and complaints can be sent directly to the compliance department and provides them with the compliance department's address and phone number; and
- Branch examination verification that the procedures are being followed.

The Notice also states that, regardless of the method used for initial review of incoming, non-electronic correspondence, as with other types of correspondence, Rule 3010(d)(1) would still require review by a registered principal of some of each registered representative's correspondence with the public relating to the member's investment banking or securities business.

Notice to Members 98–11 stated that firms would be required to review all incoming correspondence received in non-electronic format directed to registered representatives and related to a member's investment banking or securities business. The NASDR proposes to replace this requirement with the rule amendment and guidance contained in this proposed rule change. The Notice that will be issued when this proposed rule is approved will state that the requirement set forth in Notice to Members 98–11 is no longer applicable and has been superseded by the amendment to Rule 3010(d)(2) and the guidance provided in the Notice.

As discussed above, the effective date of the provision in Notice to Members 98–11 stating that members must review ''all incoming correspondence received in non-electronic format directed to registered representatives and related to a member's investment banking or securities business'' has been delayed to allow the NASDR and member firms time to develop and implement alternative, workable procedures for the review of such correspondence. The delay in the effective date of this provision is scheduled to expire on September 30, 1998.[10] To ensure continuity of the regulatory requirements applicable to member firms, the NASDR proposes an extension of the effective date of this provision until this proposed rule change has been approved and has been made effective.

2. Statutory Basis

The NASDR believes the proposed rule change is consistent with Section 15A(b)(6) of the Act,[11] which requires, among other things, that the Association's rules must be designed to prevent fraudulent and manipulative acts and practices, to promote just and equitable principles of trade, and, in general, to protect investors and the public interest. The NASD believes that reviewing incoming, non-electronic correspondence to identify customer complaints and funds is consistent with this requirement.

B. Self-Regulatory Organization's Statement on Burden on Competition

The NASDR does not believe that the proposed rule change will impose a burden on competition that is not necessary or appropriate in furtherance of the purposes of the Act, as amended.

C. Self-Regulatory Organization's Statement on Comments on the Proposed Rule Change Received From Members, Participants or Others

Written comments were neither solicited nor received.

III. Date of Effectiveness of the Proposed Rule Change and Timing for Commission Action

With respect to the proposal to extend the effective date of the provision in Notice to Members 98–11 regarding the review of incoming, non-electronic correspondence: The foregoing rule change constitutes a stated policy, practice, or interpretation with respect to the meaning, administration or enforcement of an existing rule of the Association and, therefore, has become effective pursuant to Section 19(b)(3)(A) of the Act[12] and subparagraph (e) of Rule 19b–4 thereunder.[13]

At any time within 60 days of the filing of this portion of the rule change, the Commission may summarily abrogate such rule change if it appears to the Commission that such action is necessary or appropriate in the public interest, for the protection of investors, or otherwise in furtherance of the purposes of the Act.

With respect to the substantive provisions of the proposed rule change: Within 35 days of the date of the publication of this notice in the **Federal Register** or within such longer period (i) as the Commission may designate up to 90 days of such date if it finds such longer period to be appropriate and publishes its reasons for so finding or (ii) as to which the self-regulatory organization consents, the Commission will:

A. By order approve such proposed rule change, or

B. Institute proceedings to determine whether the proposed rule change should be is approved.

IV. Solicitation of Comments

Interested person are invited to submit written data, views and arguments concerning the foregoing, including whether the proposed rule change, as amended, is consistent with the Act. Persons making written submission should file six copies thereof with the Secretary, Securities and Exchange Commission, 450 Fifth Street, NW, Washington DC 20549. Copies of the submission, all subsequent amendments, all written statements with respect to the proposed rule change that are filed with the Commission, and all written communications relating to the proposed rule change between the Commission and any person, other than those that may be withheld from the public in accordance with the provisions of 5 U.S.C. 552, will be available for inspection and copying in the Commission's Public Reference Room, 450 Fifth Street, NW, Washington DC. Copies of such filing also will be available for inspection and copying at the NASD. All submissions should refer to File No. SR–NASD–98–52 and should be submitted by September 24, 1998.

For the Commission, by the Division of Market Regulation, pursuant to delegated authority.[14]

Jonathan G. Katz,

Secretary.

[FR Doc. 98–23767 Filed 9–2–98; 8:45 am]

BILLING CODE 8010–01–M

[10] *See* Securities Exchange Act Release No. 41078, *supra* note 8.

[11] 15 U.S.C. 78o–3(b)(6).

[12] 15 U.S.C. 78s(b)(3)(A).

[13] 17 CFR 19b–4(e).

[14] 17 CFR 200.30–3(a)(12).

SECURITIES AND EXCHANGE COMMISSION

[Release No. 34–40365; File No. SR–NASD–98–29]

Self-Regulatory Organizations; National Association of Securities Dealers, Inc.; Order Approving Proposed Rule Change and Amendment No. 1 Thereto and Notice of Filing and Order Granting Accelerated Approval to Amendment No. 2 to Proposed Rule Change Relating to Standards for Individual Correspondence

August 26, 1998.

I. Introduction

On April 6, 1998, the National Association of Securities Dealers, Inc. (''NASD'' or ''Association''), through its wholly-owned subsidiary, the NASD Regulation, Inc. (''NASDR''), submitted to the Securities and Exchange Commission (''SEC'' or ''Commission''), pursuant to Section 19(b)(1) of the Securities Exchange Act of 1934 (''Act''),[1] and Rule 19b–4 thereunder,[2] a proposed rule change to amend NASD Conduct Rule 2210 to require that written or electronic communications prepared for a single customer be subject to the general standards and those specific standards of NASD Rule 2210 that prohibit misleading statements. On April 30, 1998, the NASDR filed Amendment No. 1 to the proposed rule change.[3]

The proposed rule change, as amended, was published for comment in the **Federal Register** on May 8, 1998.[4] One comment letter was received on the proposal.[5] On August 4, 1998, the NASDR filed Amendment No. 2 to the proposed rule change.[6] The Commission solicits comments on Amendment No. 2 from interested persons. This order approves the proposed rule change and Amendment No. 1 thereto and approves Amendment No. 2 to the proposed rule change on an accelerated basis.

II. Background and Description of the Proposal

Currently, NASD Rule 2210 imposes various requirements on member communications with the public, designed to ensure that those communications are fair, balanced, and not misleading. However, NASD Rule 2210 does not expressly apply to the content of correspondence, defined as a communication to only one person. In addition, there is presently no definition of correspondence in the NASD rules, even though members are required to supervise the use of correspondence by their associated persons under NASD Rule 3010.

In June 1997, the NASDR requested comment on proposed amendments to NASD Rule 2210 to define ''correspondence'' and amend the rule to clarify which particular standards would apply to correspondence.[7] As first proposed, the amendments to NASD Rule 2210 would have required that communications prepared for a single customer be subject to the standards, but not the filing and review requirements, of NASD Rule 2210. The general standards of NASD Rule 2210 define or prohibit the dissemination of statements that could be considered misleading. The specific standards of NASD Rule 2210, set forth in subparagraph (d)(1) require certain additional disclosures to be included in certain cases. Most commenters supported applying to correspondence only the general standards of NASD Rule 2210, which, among other things, prohibit untrue statements of material facts, the omission of material facts, and statements that are exaggerated, misleading, or unwarranted. These commenters stated that imposing all of the specific standards on each item of correspondence, particularly those that require additional disclosure, would unduly complicate communication with clients and unnecessarily burden supervisory programs without materially contributing to the protection of investors.

The NASDR believes that certain statements pose similar dangers regardless of whether they are communicated to one person or many persons. Therefore, the NASDR proposed to subject correspondence to the general standards and those specific standards of NASD Rule 2210 that prohibit misleading statements, but not to the specific standards of the rule that require specific disclosure. The proposal would create a category defined as ''communications with the public'' to include the current definitions of ''advertisement'' and ''sales literature,'' and a new definition of ''correspondence.'' ''Correspondence'' is defined in the proposal as ''* * * [a]ny written or electronic communication prepared for delivery to a single current or prospective customer, and not for dissemination to multiple customers or the general public.'' The NASDR also proposes that in determining whether a written or electronic communication is prepared for delivery to a single current or prospective customer, NASD members should consider, and the staff of the NASDR should examine, among other things, the form and content of the communication. Thus, a written or electronic communication addressed to a single current or prospective customer, the content of which is substantially identical to that of written or electronic communications sent to one or more other current or prospective customers, is a form letter, not ''correspondence.'' Form letters are considered ''sales literature'' under NASD Rule 2210 and therefore, would be subject to all of the general and specific standards of NASD Rule 2210.

The proposed rule change would amend NASD Rule 2210 to subject individual correspondence to the general standards under subparagraph (d)(1) and the following specific standards under subparagraph (d)(2) of NASD Rule 2210: (i) subparagraph (d)(2)(C), which prohibits exaggerated, unwarranted, or certain other specific claims or opinions; (ii) subparagraph (d)(2)(E), which prohibits certain offers of free services; (iii) subparagraph (d)(2)(F), which prohibits certain claims for research services; (iv) subparagraph (d)(2)(G), which prohibits certain hedge clauses; (v) subparagraph (d)(2)(J), which prohibits the implication of endorsement or approval by regulatory organizations; and (vi) subparagraph (d)(2)(N), which prohibits predictions and projections of investment results.[8] Each of these specific provisions derive from members' general obligations not to make statements that are misleading or without a reasonable basis in fact. In addition, as the proposed rule change is not intended to change the current

[1] 15 U.S.C. 78s(b)(1).

[2] 17 CFR 240.19b–4.

[3] *See* Letter from John Ramsay, Vice President and Deputy General Counsel, NASDR, to Katherine A. England, Assistant Director, Division of Market Regulation (''Division''), Commission, dated April 29, 1998 (''Amendment No. 1'').

[4] *See* Securities Exchange Act Release No. 39942 (May 1, 1998), 63 FR 25532.

[5] *See* Letter from Joseph P. Savage, Assistant Counsel, Investment Company Institute (''ICI''), to Jonathan G. Katz, Secretary, Commission, dated May 29, 1998 (''ICI Letter'').

[6] *See* Letter from John M. Ramsay, Vice President and Deputy General Counsel, NASDR, to Katherine A. England, Assistant Director, Division, Commission, dated August 4, 1998 (''Amendment No. 2''). In Amendment No. 2, the NASDR responds to the concerns raised in the ICI Letter and proposes to amend its filing to delete the phrase ''or a single customer'' in subparagraph (d)(1)(D)(ii) to NASD Rule 2210 and to revise subparagraph (d)(2)(L) to NASD Rule 2210 to specify that the requirements apply solely to advertisements and sales literature.

[7] *See* NASD Notice to Members 97–37 (June 1997).

[8] As initially proposed, subparagraph (d)(2)(L), which prohibits certain statements regarding tax free or tax exempt returns, also would have applied to correspondence. In response to the ICI Letter, the NASDR, in Amendment No. 2, eliminated this requirement. *See* Amendment No. 2, *supra* note 6.

application of Interpretive Memoranda under NASD Rule 2210, paragraph (a) to IM–2210–1, relating to collateralized mortgage obligations, has been amended to clarify that the interpretation applies only to advertisements and sales literature.

III. Summary of Comments

The Commission received one comment letter on the proposed rule change.[9] The commenter generally opposed the proposal. Specifically, the ICI believes the proposed changes are unnecessary given recent amendments to NASD Rule 3010 and 3110 and the fact that NASDR based the rule on three isolated incidents occurring more than two years ago. The ICI also requested: (1) clarification as to the applicability of correspondence to the Commission's advertising rules; (2) that the proposal be limited to correspondence made ''in connection with the offer or sale of any security;'' (3) that subparagraph (d)(1)(A) to NASD Rule 2210 be revised to limit the applicability of the ''sound basis'' requirement to advertisements and sales literature; (4) that the phrase ''or a single customer'' be deleted from subparagraph (d)(1)(D)(ii) to NASD Rule 2210; and (5) that subparagraph (d)(2)(L) to NASD Rule 2210 be revised to apply only to advertisements and sales literature.

In response, the NASDR proposes to amend its filing to delete the phrase ''or a single customer'' in subparagraph (d)(1)(D)(ii) to NASD Rule 2210 and to revise subparagraph (d)(2)(L) to NASD Rule 2210 to specify that the requirements apply solely to advertisements and sales literature.

IV. Discussion

After careful review, the Commission finds that the proposed rule change is consistent with the requirements of the Act and the rules and regulations thereunder applicable to a national securities association.[10] Specifically, the Commission believes the proposal is consistent with the requirements of Section 15A(b)(6) of the Act [11] in that it is designed to prevent fraudulent and manipulative acts and practices and to protect investors and the public interest. The Commission believes that the proposal, which applies the general and certain specific standards of the NASD's communications rules to correspondence directed towards a single customer, is designed to protect existing and prospective customers by requiring that such correspondence not be misleading.

The NASDR proposes to define the word ''correspondence'' in new subparagraph (a)(3) to NASD Rule 2210 as ''. . .[a]ny written or electronic communication prepared for delivery to a single current or prospective member, and not for dissemination to multiple customers or the general public.'' The Commission believes that the proposed new definition of the word ''correspondence'' adequately addresses the type of communications sent by member firms to prospective and existing customers that satisfy the definitions of neither ''advertising'' nor ''sales literature'' under the rule. In addition, the Commission believes the proposal appropriately advises members and NASD examiners to consider, among other things, the form and content of the communication when determining whether a given communication constitutes correspondence.

As discussed above, the NASDR proposal would apply the general and certain specific standards of NASD Rule 2210 to correspondence directed towards a single customer. The Commission believes that the NASD Rule 2210 requirements, which are designed to ensure that communications are fair, balanced, and not misleading, are consistent with the Act. The Commission believes that the application of such standards to correspondence directed towards a single customer is appropriate, as such persons have as much, if not more, reason to rely on the veracity and accuracy of the content of such correspondence as would the recipient of a ''form'' letter, which is subject to all of the general and specific standards of NASD Rule 2210. The Commission recognizes that several existing NASD Rules, including NASD Rules 2110, 3010, and IM–2310–2,[12] impose broad-based requirements on NASD member firms to deal fairly with the public. Nonetheless, the Commission believes that the more specific requirements set forth in the current proposal should help to clarify member firms' obligations with respect to written and electronic correspondence directed towards a single existing or prospective customer.

The Commission also believes that the NASDR's proposal to apply only certain of the specific standards set forth in subparagraph (d)(2) to NASD Rule 2210 to correspondence directed towards a single customer is reasonable. To require each of the specific standards of NASD Rule 2210 to be applied would likely overwhelm the recipient of such correspondence with irrelevant, and possibly confusing, information. The Commission believes that the NASDR's proposal to apply certain of the specific standards set forth in subparagraph (d)(2) to NASD Rule 2210 reasonably balances member firms' need for workable regulatory guidelines with investors' need for reliable information. Accordingly, the Commission believes that the proposed rule change, as amended, is consistent with the Act.

The Commission finds good cause for approving proposed Amendment No. 2 prior to the thirtieth day after the date of publication of notice of filing thereof in the **Federal Register.** In Amendment No. 2, the NASDR addresses the concerns raised in the one comment letter received by the Commission on this proposal. Amendment No. 2 modifies the original filing only slightly, in response to specific comments made in the ICI Letter. Specifically, Amendment No. 2 deletes the phrase ''or a single customer'' in subparagraph (d)(1)(D)(ii) to NASD Rule 2210 and limits the applicability of subparagraph (d)(2)(L) to NASD Rule 2210 to advertisements and sales literature. As the modifications proposed in Amendment No. 2 are reasonable and do not significantly alter the original proposal, the Commission believes that Amendment No. 2 raises no issues of regulatory concern. Accordingly, the Commission believes that it is consistent with Section 15A(b)(6) of the Act [13] to approve Amendment No. 2 to the proposed rule change on an accelerated basis.

V. Solicitation of Comments

Interested persons are invited to submit written data, views and arguments concerning Amendment No. 2, including whether Amendment No. 2 consistent with the Act. Persons making written submissions should file six copies thereof with the Secretary, Securities and Exchange Commission, 450 Fifth Street, NW., Washington, DC 20549. Copies of the submission, all subsequent amendments, all written statements with respect to the proposed rule change that are filed with the

[9] *See* ICI Letter, *supra* note 5.

[10] In approving this rule, the Commission has considered the proposed rule's impact on efficiency, competition, and capital formation. 15 U.S.C. 78c(f).

[11] 15 U.S.C. 78o–3(b)(6).

[12] NASD Rule 2110 requires that ''[a] member, in the conduct of his business, shall observe high standards of commercial honor and just and equitable principles of trade.'' NASD Rule 3010(d) sets forth members' responsibilities relating to the supervision of correspondence. IM–2310–2 sets forth member firms' obligations in their dealings with customers.

[13] 15 U.S.C. 78o–3(b)(6).

Commission, and all written communications relating to the proposed rule change between the Commission and any person, other than those that may be withheld from the public in accordance with the provisions of 5 U.S.C. 552, will be available for inspection and copying in the Commission's Public Reference Room, 450 Fifth Street, NW, Washington, DC 20549. Copies of all such filings will also be available for inspection and copying at the principal office of the NASD. All submissions should refer to File No. SR–NASD–98–29 and should be submitted by September 24, 1998.

VI. Conclusion

It Is Therefore Ordered, pursuant to Section 19(b)(2) of the Act,[14] that the proposed rule change (SR–NASD–98–29), as amended, is approved.

Jonathan G. Katz,

Secretary.

For the Commission, by the Division of Market Regulation, pursuant to delegated authority.[15]

Jonathan G. Katz,

Secretary.

[FR Doc. 98–23769 Filed 9–2–98; 8:45 am]

BILLING CODE 8010–01–M

SECURITIES AND EXCHANGE COMMISSION

[Release No. 34–40378; File No. SR–NASD–98–57]

Self-Regulatory Organizations; Notice of Filing of Proposed Rule Change and Amendment No. 1Thereto by the National Association of Securities Dealers, Inc. Relating to Amendments to NASD Membership and Registration, Investigation and Sanctions, Conduct and Code of Procedure Rules

August 27, 1998.

Pursuant to Section 19(b)(1) of the Securities Exchange Act of 1934 (''Act''),[1] and Rule 19b–4 thereunder,[2] notice is hereby given that on August 7, 1998, the National Association of Securities Dealers, Inc. (''NASD'' or the ''Association''), through its regulatory subsidiary, NASD Regulation, Inc. (''NASD Regulation'') filed with the Securities and Exchange Commission (''SEC'' or ''Commission'') the proposed rule change as described in Items I, II, and III below, which Items have been prepared by NASD Regulation. The filing was amended on August 17, 1998,[3] and further amended on August 26, 1998.[4] The Commission is publishing this notice to solicit comments on the proposed rule change, as amended, from interested persons.

I. Self-Regulatory Organization's Statement of the Terms of Substance of the Proposed Rule Change

NASD Regulation is proposing to amend the Rules of the Association to permit the Department of Enforcement to amend complaints, without Hearing Officer approval, prior to the filing of responsive pleadings; to clarify and consolidate default provisions and shorten the call period for default decisions to 25 days; to require the Office of the General Counsel to issue decisions in settled cases; to change the trigger date for which the timing of motions to introduce new evidence is keyed; to permit Advertising Department staff to impose advertising pre-use filing requirements on members; to consolidate procedures for cancellation or suspension for failure to provide requested information; to simplify and expedite certain non-summary procedures in the Rule 9500 Series; and for other purposes.[5]

The text of the proposed rule change follows. Proposed new language is in italics; proposed deletions are in brackets.

* * * * *

0100. GENERAL PROVISIONS

0120. Definitions

* * * * *

(m) ''National *Adjudicatory Council* [Business Conduct Committee]''

The term ''National *Adjudicatory Council* [Business Conduct Committee]'' means the committee of [the Board of Directors of] NASD Regulation which may be authorized and directed to act for the Board of Directors of NASD Regulation in a manner consistent with the By-Laws of NASD Regulation, the Rules of the Association, and the Delegation Plan with respect to (1) an appeal or review of a disciplinary proceeding; (2) a statutory disqualification decision; (3) a review of a membership proceeding; (4) a review of an offer of settlement, a letter of acceptance, waiver, and consent, and a minor rule violation plan letter; (5) the exercise of exemptive authority; and (6) such other proceedings or actions authorized by the Rules of the Association.

* * * * *

2000. BUSINESS CONDUCT

* * * * *

2200. COMMUNICATIONS WITH CUSTOMERS AND THE PUBLIC

2210. Communications With The Public

* * * * *

(c) Filing Requirements and Review Procedures

* * * * *

(4)(A) Notwithstanding the foregoing provisions, [any District Business Conduct Committee of the Association] *the Department*, upon review of a member's advertising and/or sales literature, and after determining that the member has departed and there is a reasonable likelihood that the member will again depart from the standards of this Rule, may require that such member file all advertising and/or sales literature, or the portion of such member's material which is related to any specific types of classes of securities or services, with the Department [and/or the District Committee], at least ten days prior to use. The member must provide with each filing the actual or anticipated date of first use.

(B) The [Committee] *Department* shall notify the member in writing of the types of material to be filed and the length of time such requirement is to be in effect. The requirement shall not exceed one year, however, and shall not take effect until 30 days after the member receives the written notice, during which time the member may request a hearing [before the District Business Conduct Committee] *under Rule 9514*, and any such hearing shall be held in reasonable conformity with the hearing and appeal procedures of the [Code of Procedure as contained in the] Rule [9000] *9510* Series.

* * * * *

2220. Options Communications with the Public

* * * * *

(c) Association Approval Requirements and Review Procedures

(1) In addition to the approval required by paragraph (b) of this Rule, every advertisement and all educational material of a member or member organization pertaining to options shall

---

[14] 15 U.S.C. 78s(b)(2).

[15] 17 CFR 200.30–3(a)(12).

[1] 15 U.S.C. 78s(b)(1).

[2] 17 CFR 240.19b–4.

[3] Letter from Joan C. Conley, Secretary, NASD Regulation to Katherine A. England, Assistant Director, Division of Market Regulation, Commission, dated August 17, 1998.

[4] E-mail from Eric Moss, Attorney, NASD Regulation to Mandy Cohen, Attorney, Division of Market Regulation, Commission, dated August 26, 1998.

[5] The filing proposes amendment to Rules 0120, 2210, 2220, 2320, 8210, the Rule 8220 Series, IM–8310–2, 9212, 9215, 9241, 9269, 9270, 9312, 9346, 9360, the Rule 9500 Series, and 9610, specifically.

be submitted to the Advertising/ Investment Companies Regulation Department of the Association *(''Department'')* at least ten days prior to use (or such shorter period as the Association may allow in particular instances) for approval and, if changed or expressly disapproved by the Association, shall be withheld from circulation until any changes specified by the Association have been made or, in the event of disapproval, until the advertisement or educational material has been resubmitted for, and has received, Association approval.

(2)(A) Notwithstanding the foregoing provision, [any District Business Conduct Committee of the Association] *the Department,* upon review of a member's options advertisements, educational material and/or sales literature, and after determining that the member will again depart from the standards of this Rule, may require that such member file all options advertisements, educational material and/or sales literature, or the portions of such member's material that is related to any specific types or classes of securities or services, with the [Association and/or the District Committee] *Department,* at least ten days prior to use.

(B) The [Committee] *Department* shall notify the member in writing of the types of material to be filed and the length of time such requirement is to be in effect. The requirement shall not exceed one year, however, and shall not take effect until 30 days after the member receives the written notice, during which time the member may request a hearing [before the District Business Conduct Committee] *under Rule 9514,* and any such hearing shall be in conformity with the hearing and appeal procedures of the [Code of Procedure, as set forth in the] Rule [9000] *9510* Series.

* * * * *

2320. Best Execution and Interpositioning

(a) In any transaction for or with a customer, a member and persons associated with a member shall use reasonable diligence to ascertain the best inter-dealer market for the subject security and buy or sell in such market so that the resultant price to the customer is as favorable as possible under prevailing market conditions. Among the factors *that* [which] will be considered [by the Business Conduct Committees] in *determining whether a member has used* [applying the standard of] ''reasonable diligence'' [in this area] are:

* * * * *

(g)(1) In any transaction for or with a customer pertaining to the execution of an order in a non-Nasdaq security (as defined in the Rule 6700 Series), a member or person associated with a member, shall contact and obtain quotations from three dealers (or all dealers if three or less) to determine the best inter-dealer market for the subject security.

(2) *Pursuant to the Rule 9600 Series.* [T]*t*he staff, *for good cause shown* [upon written request,] after taking into consideration all relevant factors, may exempt any transaction or classes of transactions, either unconditionally or on specified terms, from any or all of the provisions of this paragraph if it determines that such exemption is consistent with the purpose of this Rule, the protection of investors, and the public interest. [Any decision whether to grant such an exemption may be appealed to the National Business Conduct Committee.]

* * * * *

8210. Provision of Information and Testimony and Inspection and Copying of Books

(a) Authority of Adjudicator and Association Staff

For the purpose of an investigation, complaint, examination, or proceeding authorized by the NASD By-Laws or the Rules of the Association, an Adjudicator or Association staff shall have the right to:

(1) require a member, person associated with a member, or person subject to the Association's jurisdiction to provide information orally, in writing, or electronically (if the requested information is, or is required to be, maintained in electronic form) and to testify *at a location specified by Association staff,* under oath or affirmation administered by a court reporter or a notary public if requested, with respect to any matter involved in the investigation, complaint, examination, or proceeding; and

(2) No change.

* * * * *

8220. Suspension *or Cancellation* for Failure to Provide Requested Information

8221. Notice

(a) Notice to Member

If a member fails to provide any information, report, material, data, or testimony requested pursuant to the NASD By-Laws or the Rules of the Association, or fails to keep its membership application or supporting documents current, the [National Adjudicatory Council] *Department of Enforcement* may provide written notice to such member specifying the nature of the failure and stating that the failure to take such action within 20 days after service of the notice constitutes grounds for suspension *or cancellation* [from] *of* membership.

(b) Notice to Person Associated with Member

If a person associated with a member fails to provide any information, report, material, data, or testimony requested pursuant to the NASD By-Laws or the Rules of the Association, the the [National Adjudicatory Council] *Department of Enforcement* may provide written notice to such person specifying the nature of the failure and stating that the failure to take such action within 20 days after service of the notice constitutes grounds for suspending the association of the person with the member.

(c) Service of Notice

The [National Adjudicatory Council] *Department of Enforcement* shall serve the member or person associated with a member with such notice via personal service or *overnight* commercial courier.

8222. Hearing

(a) Request for Hearing

Within five days after the date of service of a notice issued under Rule 8221, a member or person associated with a member served with a notice under Rule 8221(c) may file with the [National Adjudicatory Council] *NASD Regulation Office of General Counsel* a written request for an expedited hearing before a subcommittee of the National Adjudicatory Council. The request shall state with specificity why the member or associated person believes that there are insufficient grounds for suspension *or cancellation* or any other reason for setting aside the notice issued [by the National Adjudicatory Council]*under Rule 8221.*

(b) Hearing Procedures

(1) Appointment of Subcommittee

If a hearing is requested, the National Adjudicatory Council or the Review Subcommittee described in Rule 9120 shall appoint a subcommittee to conduct the hearing and decide whether the member or person associated with a member shall be suspended *or canceled.* The subcommittee shall be composed of a *current* member of the National Adjudicatory Council and one or more

current or former members of the *National Adjudicatory Council,* NASD Regulation Board [and],*or* [the] NASD Board.

(2) Time of Hearing

The hearing shall be held within [20] 30 days after the date of service of the notice issued under Rule 8221. Not later than seven days before the hearing, the subcommittee shall serve the member or person associated with a member with written notice of the date and time of the hearing via *overnight* commercial courier or facsimile and notify the [appropriate department or office of NASD Regulation] *Department of Enforcement* of the date and time of the hearing. [The appropriate department or office of NASD Regulation (hereinafter ''appropriate department or office'' in the Rule 8220 Series) shall be the department or office that issued the request for the information, report, material, data, or testimony that the member or associated person failed to provide, or in the case of a member that failed to keep its membership application or supporting documents current, the Department of Member Regulation.]

(3) Transmission of Documents

Not later than seven days before the hearing, the [subcommittee] *Department of Enforcement* shall serve the member or person associated with a member via *overnight* commercial courier with all documents that were considered in connection with the [National Adjudicatory Council's] decision to issue a notice under Rule 8221, *unless a document meets the criteria of Rule 9251(b)(1)(A), (B), or (C). A document that meets such criteria shall not constitute part of the record, but shall be retained by the Association until the date upon which the Association serves a final decision or, if applicable, upon the conclusion of any review by the Commission or the federal courts. The Department of Enforcement shall provide a copy of the documents transmitted to the member or person associated with a member to the subcommittee.*

(4) Counsel

The member or person associated with a member and the [appropriate department or office] *Department of Enforcment* may be represented by counsel at a hearing conducted under this Rule.

(5) Evidence

Formal rules of evidence shall not apply to a hearing under this Rule. Not later than four days before the hearing, the member or person associated with a member and the [appropriate department or office] *Department of Enforcement* shall exchange copies of proposed hearing exhibits and witness lists and provide copies of the same to the subcommittee.

(6) Witnesses

No change.

(7) Additional Information

AT any time during its consideration, the subcommittee may direct the member or person associated with a member or the [appropriate department or office] *Department of Enforcement* to submit additional information. Any additional information submitted shall be provided *promptly* to all parties *at least one business day* before the subcommittee renders its decision.

(8) Transcript

No change.

(9) Record

The record shall consist of all documents that were considered in connection with the [National Adjudicatory Council's] decision to issue a notice under Rule 8221, the notice issued under Rule 8221, the request for hearing filed under Rule 8222, the transcript of the hearing, and each document or other item of evidence presented to or considered by the subcommittee. The Office of the General Counsel of NASD Regulations shall be the custodian of the record.

(10) Failure To Appear at Hearing

If a member or person associated with a member fails to appear at a hearing for which it has notice, the subcommittee may dismiss the request for a hearing as abandoned, and the notice [of the National Adjudicatory Council] issued under Rule 8221 shall become the final action of the Association. Upon a showing of good cause, the subcommittee may withdraw a dismissal entered pursuant to this subparagraph.

8223. Decision

(a) Subcommittee

(1) Proposed Written Decision

The subcommittee may suspend *or cancel* the membership of a member or suspend the association of a person with a member for failure to take the action required by the notice issued under Rule 8221. The subcommittee shall prepare a proposed written decision, and if the subcommittee determines that a suspension should be imposed, the proposed written decision shall state the grounds for the suspension *or cancellation* and the conditions for terminating the suspension. The subcommittee shall provide its proposed written decision to the NASD Board of Governors.

(2) Issuance of Decision After Expiration of Call for Review Period

If no Governor calls the [suspension] proceeding for review within the time prescribed in paragraph (b)(1), the subcommittee's proposed written decision shall become final, and the subcommittee shall serve the final written decision on the member or associated person via *oversnight* commercial courier or facsimile.

(b) NASD Board of Governors

(1) Call for Review by Governor

A Governor may call the suspension *or cancellation* proceeding for review if the call for review is made not later than ten days after the Governor receives the subcommittee's proposed written decision. By a unanimous vote of the NASD Board of Governors, the NASD Board of Governors may shorten the call for review period to less than ten days. By an affirmative vote of the majority of the NASD Board of Governors then in office, the NASD Board of Governors may, during the ten day period, vote to extend the period to more than ten days.

(2) Review and Decision

If a Governor calls the suspension *or cancellation* proceeding for review within the time prescribed in subparagraph (1), [the NASD Board of Governors] *a review panel* shall *meet and* conduct a review not later than [its next meeting] *14 days after the call for review. The review panel shall be composed of the NASD Board Executive Committee, except that the Governor who calls the proceeding for review shall serve on the review panel in lieu of a member of the Executive Committee who has the same classification (Industry, Non-Industry, or Public) as such Governor.* The [NASD Board of Governors] *review panel* may affirm, modify, or reverse the decision of the subcommittee. Not later than seven days after the [NASD Board of Governors] *review panel* meeting, the [NASD Board of Governors] *review panel* shall serve a final written decision on the member or person associated with a member via *overnight* comemrcial courier or facsimile. The decision shall state the disposition of the suspension *or cancellation* proceeding, and if a suspension is imposed, state the grounds for the suspension and the conditions for terminating the suspension.

(c) Effective Date

No change.

8224. Notice to Membership

The Association shall provide notice of a suspension *or cancellation* under the Rule 8220 Series and the grounds therefor in the next membership supplement.

8225. Termination of Suspension

(a) Filing of Request

A suspended member or person associated with a member may file a written request for termination of the suspension on the ground of full compliance with the notice issued under Rule 8221 or, if applicable, the conditions of a decision under Rule 8223, with the head of the [appropriate department or office] *Department of Enforcement.*

(b) Response by Department of Enforcement

The head of the [appropriate department or office] *Department of Enforcement* shall respond to the request in writing within five days after receipt of the request.

(1) Request Granted

If the head of the [appropriate department or office] *Department of Enforcement* grants the request, he or she shall serve the member or person associated with a member with written notice of the termination of the suspension via *overnight* commercial courier or facsimile.

(2) Request Denied

If the head of the department or office denies the request, the suspended member or person associated with a member may file a written request for relief with the [National Adjudicatory Council] *NASD Regulation Office of General Counsel. If the member or person associated with a member files the written request for relief within 30 days after service of the decision under Rule 8223,* [The National Adjudicatory Council] *the review panel constituted under rule 8223* shall respond to the request *for relief* in writing within ten days after receipt of the request. *If the member or person associated with a member files the written request for relief more than 30 days after service of the decision under Rule 8223, the National Adjudicatory Council shall respond to the request for relief in writing within ten days after receipt of the request.* The *review panel's or* National Adjudicatory Council's response shall be served on the member or person associated with a member via *overnight* commercial courier or facsimile.

* * * * *

8300. SANCTIONS

* * * * *

IM–8310–2. Release of Disciplinary Information

* * * * *

(d)(1) The Association shall release to the public information with respect to any disciplinary decision issued pursuant to the Rule 9000 Series imposing a suspension, cancellation or expulsion of a member; or suspension or revocation of the registration of a person associated with a member; or suspension or barring of a member or person asssociated with a member from association with all members; or imposition of monetary sanctions of $10,000 or more upon a member or person associated with a member, or containing an allegation of a violation of a Designated Rule; and may also release such information with respect to any disciplinary decision or group of decisions that involve a significant policy or enforcement determination where the release of information is deemed by the President of NASD Regulation, Inc. to be in the public interest. *The Association also may release to the public information with respect to any disciplinary decision issued pursuant to the Rule 8220 Series imposing a suspension or cancellation of the member or a suspension of the association of a person with a member, unless the National Adjudicatory Council determines otherwise.* The National Adjudicatory Council may, in its discretion, determine to waive the requirement to release information with respect to a disciplinary decision under those extraordinary circumstances where the release of such information would violate fundamental notions of fairness or work an injustice.

* * * * *

9000. CODE OF PROCEDURE

* * * * *

9200. DISCIPLINARY PROCEEDINGS

9212. Complaint Issuance—Requirements, Service, Amendment, Withdrawal, and Docketing

(a) Form, Content, Notice, Docketing, and Service

No change.

(b) Amendments to Complaint

The Department of Enforcement may file and serve an amended complaint that includes new matters of fact or law at any time before the Respondent answers the complaint. After the Respondent answers, u[U]pon motion by the Department of Enforcement, the Hearing Officer may *permite the Department of Enforcement to amend the complaint to include new matters of fact or law,* [at any time] after considering *whether the Department of Enforcement has shown* good cause *for the amendment* [shown by the Department of Enforcement] and *whether any Respondent will suffer* any unfair prejudice *if the amendment is allowed* [to any Respondent, permit the Department of Enforcement to amend a complaint to include new matters of fact or law].

* * * * *

9215. Answer to Complaint

* * * * *

(f) Failure to Answer, Default

If a Respondent does not file an answer or make any other filing or request related to the complaint with the Office of Hearing Officers within the time required, the Department of Enforcement shall send a second notice to such Respondent requiring an answer within 14 days after service of the second notice. The second notice shall state that failure of the Respondent to reply within the period specified shall allow the Hearing Officer, in the exercise of his or her discretion, *pursuant to Rule 9269* to: (1) treat as admitted by the Respondent the allegations in the complaint; and (2) *issue* [enter] a default decision against the Respondent [pursuant to Rule 9269]. If *the Respondent fails to file an* [no] answer [is filed] with the Office of Hearing Officers within the time required, *the Hearing Officer may issue* [allegations of the complaint may be considered admitted by such Respondent and] a default decisions *against the Respondent pursuant to Rule 9269* [may be issued by the Hearing Officer. A Respondent may, for good cause shown, move the National Adjudicatory Council to set aside a default].

* * * * *

9241. Pre-hearing Conference

(a) through (e)

No change.

(f) Failure to Appear: Default

The Hearing Officer may issue a default decision, pursuant to Rule 9269, against a [A] Party *that* [who] fails to appear, in person or through counsel or a representative, at a pre-hearing conference of which *the Party* [he or she] has [been duly] *due notice*

[notified, may be deemed in default pursuant to Rule 9269. A Party may, for good cause shown, file a motion to set aside the default].

* * * * *

9269. *Default Decision* [Failure to Appear at Hearing; Defaults]

(a) *Issuance of Default Decision* [Failure to Appear May Result in Default Decision]

(1) The Hearing Officer may issue a default decision against a Respondent that fails to answer the complaint within the time afforded under Rule 9215, or a Party that fails to appear at a pre-hearing conference held pursuant to Rule 9241 of which the Party has due notice, or a [A] Party *that* [who] fails to appear at [a] *any* hearing *that a Party is required to attend under the Rule 9200 Series* of which *the Party* [he or she has been] *has due notice* [been duly notified may be deemed to be in default].

(2) If the defaulting Party is the Respondent, [As a consequence of the default], *the Hearing Officer may deem* the allegations against [a non-appearing] *that* Respondent [may be deemed] admitted [and a default decision entered by the Hearing Officer]. If the [non-appearing Party] *defaulting Party* is the Department of Enforcement, the Hearing Officer may *issue a default decision* order*ing* that the complaint be dismissed with prejudice.

(3) [In addition, t]*T*he Hearing Officer may order *a Party that fails to appear at the pre-hearing conference or the hearing to* [the non-appearing Party] pay the costs incurred by other Parties in connection with their appearance [at the hearing].

(b) *Contents of Decision* [Request to Set Aside Default

A party may, for good cause shown, file a motion to set aside a default, dismissal, and the imposition of costs.] *The contents of a default shall conform to the requirements of Rule 9268(b).*

(c) Review of Default Decision

Party may, for good cause shown, file a motion to set aside a default, dismissal, and the imposition of costs. Upon a showing of good cause, either the Review Subcommittee or the National Adjudicatory Council may enter such an order.

(d) Final Disciplinary Action of the Association: Effectiveness of Sanctions

If a default decision is not appealed pursuant to Rule 9311 or called for review pursuant to Rule 9312 within 25 days after the date the Office of Hearing Officers serves it on the Parties, the default decision shall become the final disciplinary action of the Association for purposes of SEC Rule 19d–1(c)(1). Unless otherwise provided in the default decision, the sanctions shall become effective 30 days after the default decision becomes the final disciplinary action of the Association, except that a bar or expulsion shall become effective immediately upon the default decision becoming the final disciplinary action of the Association.

* * * * *

9270. Settlement Procedure

* * * * *

(e) Uncontested Offers of Settlement

(1) through (2)

No change.

(3) If the offer of settlement and order of acceptance are accepted by the National Adjudicatory Council, the Review Subcommittee, or the General Counsel, they shall become final and [the National Adjudicatory Council, the Review Subcommittee or] the General Counsel shall [communicate the acceptance to the Hearing Officer who shall thereafter] issue the order *and notify the Office of Hearing Officers.*

(f) Contested Offers of Settlement

* * * * *

(3) If the offer of settlement and order of acceptance are accepted by the National Adjudicatory Council or the Review Subcommittee, the *General Counsel* [National Adjudicatory Council or the Review Subcommittee shall communicate the acceptance to the Hearing Officer who] shall [thereafter] issue the order *and notify the Office of Hearing Officers.*

* * * * *

9312. Review Proceeding by National Adjudicatory Council

(a) Call for Review

(1) Rule 9268 Decision

No change.

(2) Rule 9269 Decision

A default decision issued pursuant to Rule 9269 shall be subject to a call for review by the General Counsel, on his or her own motion within *25* [45] days after the date of service of the decision. If called for review, such decision shall be reviewed by the National Adjudicatory Council.

* * * * *

9346. Evidence in National Adjudicatory Council Proceedings

(a) Scope of Review

No change.

(b) Leave to Introduce Additional Evidence

A Party may apply to the Subcommittee or, if applicable, the Extended Proceeding Committee, or the National Adjudicatory Council for leave to introduce additional evidence by motion filed not later than 30 days after *the Office of Hearing Officers transmits to the National Adjudicatory Council and serves upon all Parties the index to the record, pursuant to Rule 9321* [service of such Party's notice of appeal or cross-appeal or not later than 35 days after service upon the Party by the National Adjudicatory Council of a notice of review]. The motion shall describe each item of proposed new evidence, demonstrate that there was good cause for failing to introduce it below, demonstrate why the evidence is material to the proceeding, and be filed and served. The Party may attach the documentary evidence as an exhibit to the motion. By motion filed in accordance with Rule 9146, a Party may request an extension of the period during which a Party may file a motion for leave to introduce additional evidence. A Party shall demonstrate that there was good cause for failing to file the motion for leave to introduce additional evidence during the period prescribed.

* * * * *

9360. Effectiveness of Sanctions

Unless otherwise provided in the decision issued under Rule 9349 or Rule 9351, a[A] sanction (other than a bar or an expulsion) specified in a decision constituting final disciplinary action of the Association for purposes of SEC Rule 19d–1(c)(1) shall become effective [on a date established by the Chief Hearing Officer, which shall not be earlier than] 30 days after the date of service of the decision constituting final disciplinary action. A bar or an expulsion shall become effective upon service of the decision constituting final disciplinary action of the Association for purposes of SEC Rule 19d–1(c)(1), unless otherwise specified therein. The Association shall take reasonable steps to obtain personal service of a Respondent when the sanction is a bar or an expulsion.

* * * * *

9500. [SUSPENSION, CANCELLATION, BAR, DENIAL OF ACCESS, AND ELIGIBILITY,] *OTHER* [PROCEDURES] *PROCEEDINGS*

9510. [Procedures for] Summary and Non-Summary *Proceedings* [Suspension, Cancellation, Bar, limitation, or Prohibition]

9511. Purpose and Computation of Time

(a) Purpose

[(1) The purpose of the Rule 9510 Series is to set forth procedures for certain suspensions, cancellations, bars, and limitations and prohibitions on access to the Association's services authorized by the Act and the NASD By-Laws. Pursuant to Section 15A(h)(3) of the Act, the Association may summarily:]

[(A) suspend a member or associated person who has been and is expelled or suspended from any self-regulatory organization or barred or suspended from being associated with a member of any self-regulatory organization;]

(B) suspend a member who is in such financial or operating difficulty that the Association determines and so notifies the Commission that the member cannot be permitted to continue to do business as a member with safety to investors, creditors, other members, or the Association; or]

[(C) limit or prohibit any person with respect to access to services offered by the Association if subparagraph (A) or (B) applies to such person, or in the case of a person who is not a member, if the Association determines that such person does not meet the qualification requirements or other prerequisites for such access and such person cannot be permitted to continue to have such access with safety to investors, creditors, members, or the Association.]

[(2) The Association also may take the following actions, after notice and opportunity for hearing:]

[(A) cancel the membership of a member that becomes ineligible for continuance in membership, or that continues to be associated with an ineligible person, or suspend or bar a person from continuing to be associated with a member because such person is or becomes ineligible for association under Article III, Section 3 of the NASD By-Laws;]

[(B) suspend or cancel the membership of a member or the registration of a person for failure to pay fees, dues, assessments, or other charges; failure to submit a required report or information related to such payment; or failure to comply with an arbitration award or a settlement agreement related to an arbitration or mediation under Article VI, Section 3 of the NASD By-Laws;]

[(C) cancel the membership of a member for failure to file or submit on request any report, document, or other information required to be filed with or requested by the Association under Article VII, Section 2 of the NASD By-Laws; and]

[(D) limit or prohibit any member, associated person, or other person with respect to access to services offered by the Association or a member thereof if the Association determines that such person does not meet the qualification requirements or other prerequisites for such access or such person cannot be permitted to continue to have such access with safety to investors, creditors, members, or the Association.]

[(3) Other procedures for suspending the membership of a member, suspending the registration of an associated person, or suspending a person from association with any member are found in the Rule 8220 Series and Rule 8320. Procedures for listing qualification matters are found in the Rule 9700 Series; the Rule 9510 Series does not apply to listing qualification matters.]

The Rule 9510 Series sets forth procedures for: (1) summary proceedings authorized by Section 15A(h)(3) of the Act; and (2) non-summary proceedings to impose (A) a suspension or cancellation for failure to comply with an arbitration award or a settlement agreement related to an arbitration or mediation pursuant to Article VI, Section 3 of the NASD By-Laws; (B) a suspension or cancellation of a member, or a limitation or prohibition on any member, associated person, or other person with respect to access to services offered by the Association or a member thereof, if the Association determines that such member or person does not meet the qualification requirements or other prerequisites for such access or such member or person cannot be permitted to continue to have such access with safety to investors, creditors, members, or the Association; or (C) an advertising pre-use filing requirement.

(b) Computation of Time

For purposes of the [9510] Rule *9510* Series, time shall be computed as set forth in Rule 9138, except that intermediate Saturdays, Sundays, and holidays shall be included in the computation.

9512. Initiation of *Summary* [Proceedings for Summary Suspension, Limitation, or Prohibition] *Proceeding*

No change.

9513. Initiation of *Non-Summary* Proceeding[s] [for Non-Summary Suspension, Cancellation, Bar, Limitation, or Prohibition]

(a) Notice

Association staff [shall] *may* initiate a proceeding authorized under [Section 3 of Article III, Section 3 of Article VI, or Section 2 of Article VII of the NASD By-Laws, or] Rule 9511(a)(2)[(D)] *(A) or (B),* by issuing a written notice to the member, associated person, or other person. The notice shall specify the grounds for and effective date of the cancellation, suspension, bar, limitation, or prohibition and shall state that the member, associated person, or other person may file a written request for a hearing under Rule 9514. The notice shall be served by facsimile or overnight commercial courier.

(b) Effective Date

[For any cancellation, suspension, or bar under Section 3 of Article III of the NASD By-Laws, the effective date shall be at least seven days after service of the notice on the member or associated person.] For any cancellation or suspension [under Section 3 of Article VI or Section 2 of Article VII of the NASD By-Laws] *pursuant to Rule 9511(a)(2)(A),* the effective date shall be at least 15 days after service of the notice on the member or associated person. For any *action pursuant to Rule 9511(a)(2)(B), the effective date shall be at least seven days after service of the notice on the member or person, except that the effective date for a notice of a* limitation or prohibition on access to services offered by the Association or a member thereof [pursuant to Rule 9511(a)(2)(D), the effective date shall be upon receipt of the notice] with respect to services to which the member, associated person, or other person does not have access [and shall be at least seven days after service of the notice with respect to services to which the member, associated person, or other person already has access] *shall be upon receipt of the notice.*

9514. Hearing and Decision

(a) Request

(1) Request by Member, Associated Person, or Other Person

A member, associated person, or other person who is subject to a notice issued under Rule *2210, 2220,* 9512(a), or 9513(a) may file a written request for a

hearing with the Association. The request shall state [either] the specific grounds for [reversing the summary suspension, limitation, or prohibition or for opposing the cancellation, suspension, bar, limitation, or prohibition] *setting aside the notice.* The request shall be filed pursuant to Rules 9135, 9136, and 9137 within seven days after service of the notice under Rule 9512 or 9513, *or, with respect to notice of a pre-use filing requirement under Rule 2210(c)(4) and Rule 2220(c)(2), within 30 days of such notice.* The member, associated person, or other person may withdraw its request for a hearing at any time by filing a written notice with the Association pursuant to Rules 9135, 9136, and 9137.

(2) Failure to File Request

If the member, associated person, or other person subject to the notice issued under Rule *2210, 2220,* 9512(a), or 9513(a) does not file a written request for a hearing under subparagraph (1), the notice shall constitute final action by the Association.

(3) Ex Parte Communications

No change.

(b) Designation of Party for the Association and Appointment of Hearing Panel

If a member, associated person, or other person subject to a notice under Rule *2210, 2220,* 9512, or 9513 files a written request for a hearing, an appropriate department or office of the Association shall be designated as a Party in the proceeding, and a Hearing Panel shall be appointed.

(1) If the President of NASD Regulation or NASD Regulation staff issued the notice initiating the proceeding under Rule *2210, 2220,* 9512(a), or 9513(a), the President of NASD Regulation shall designate an appropriate NASD Regulation department or office as a Party. For proceedings initiated under Rule 9513(a) concerning failure to comply with an arbitration award or a settlement agreement related to an NASD arbitration or mediation, the Chief Hearing Officer shall appoint a Hearing Panel composed of a Hearing Officer. For any other proceedings initiated under Rule *2210, 2220,* 9512(a), or 9513(a) by the President of NASD Regulation or NASD Regulation staff, the NASD Regulation Board shall appoint a Hearing Panel composed of two or more members; one member shall be a Director of NASD Regulation, and the remaining member or members shall be current or former Directors of NASD Regulation or Governors. The President of NASD Regulation may not serve on a Hearing Panel.

(2) No change.

(c) Stays

(1) Summary *Proceeding* [Suspension, Limitation, or Prohibition]

No change.

(2) Non-Summary [Cancellation, Suspension, Bar, Limitation, or Prohibition] *Proceeding*

Unless the NASD Board orders otherwise, a request for a hearing shall stay the notice issued under Rule *2210, 2220, or* 9513, except that a request for a hearing shall not stay a notice of a limitation or prohibition on services offered by the Association or a member thereof with respect to services to which a member, associated person, or other person does not have access.

(d) Time of Hearing

(1) Summary [Suspension] *Proceeding*

No change.

(2) Non-Summary [Suspension, Cancellation, Bar, Limitation or Prohibition] *Proceeding*

If a member, associated person, or other person who is subject to a notice issued under Rule *2210, 2220, or* 9513(a) files a written request for a hearing, a hearing shall be held within 21 days after the filing of the request for hearing. The Hearing Panel may, during the initial 21 day period, extend the time in which the hearing shall be held by an additional 21 days on its own motion or at the request of a Party. Not less than five days before the hearing, the Hearing Panel shall provide written notice to the Parties of the location, date, and time of the hearing by facsimile or overnight commercial courier.

(e) Transmission of Documents

(1) Not less than five days before the hearing, the Association shall provide to the member, associated person, or other person who requested the hearing, by facsimile or overnight commercial courier, all documents that were considered in issuing the notice under Rule *2210, 2220,* 9512, or 9513, unless a document meets the criteria of Rule 9251(b)(1)(A), (B), or (C). A document that meets such criteria shall not constitute part of the record, but shall be retained by the Association until the date upon which the Association serves a final decision or, if applicable, upon the conclusion of any review by the Commission or the federal courts.

(2) No change.

(f) Hearing Panel Consideration

(1)–(3) No change.

(4) Record

The record shall consist of: (1) the notice issued under rule *2210, 2220,* 9512, or 9513; (2) all documents transmitted by the Association under Rule 9514(e)(1); (3) the request for hearing; (4) any other submission by the Parties; (5) any evidence considered at the hearing; and (6) the transcript of the hearing and any corrections thereto.

(5) Custodian of the Record

If the President of NASD Regulation or NASD Regulation staff initiated the proceeding under Rule *2210, 2220,* 9512, or 9513, the Office of the General Counsel of NASD Regulation shall be the custodian of the record, *except that the Office of Hearing Officers shall be the custodian of record for proceedings initiated under Rule 9513(a) concerning failure to comply with an arbitration award or a settlement agreement related to an NASD arbitration or mediation.* If the President of Nasdaq or Nasdaq staff initiated the proceeding under Rule 9512 or 9513, the Office of the General Counsel of Nasdaq shall be the custodian of the record.

(6) Evidence Not Admitted

No change.

(g) Decision of the Hearing Panel

(1) Summary [Suspension, Limitation, or Prohibition] *Proceeding*

No change.

(2) Non-Summary [Suspension, Cancellation, Bar, Limitation, or Prohibition] *Proceeding*

Based on its review of the record, the Hearing Panel shall decide whether a cancellation, suspension, bar, limitation, [or] prohibition, *or pre-use filing requirement* shall be imposed or continue to be imposed. The Hearing Panel shall prepare a proposed written decision pursuant to subparagraph (3).

(3) Contents of Decision

The decision shall include:

(A) a statement setting forth the specific statute, rule, or NASD by-law that authorized the proceeding;

(B) a statement describing the investigative or other origin of the proceeding;

(C) the grounds for issuing the notice under Rule *2210, 2220,* 9512, or 9513;

(D) a statement of findings of fact with respect to any act or practice that was alleged to have been committed or omitted by the member, associated person, or other person;

(E) a statement in support of the disposition of the principal issues raised in the proceedings; and

(F) if a summary suspension, limitation, or prohibition continues to be imposed, the specific grounds for imposing such suspension, limitation, or prohibition, and the terms of the suspension, limitation, or prohibition[,]; or, if a non-summary suspension, cancellation, bar, limitation, [or] prohibition *or pre-use filing requirement* is to be imposed or continue to be imposed, [the] *its* effective date, time, and terms [of the suspension, cancellation, bar, limitation, or prohibition].

(4) Issuance of Decision After Expiration of Call for Review Period

No change.

9515. Discretionary Review by the NASD Board

No change.

9516. Reinstatement

A member, associated person, or other person who has been suspended or limited by a final action of the Association [after a non-summary proceeding] under the Rule 9510 Series may file a written request for reinstatement on the ground of full compliance with the conditions of the suspension or limitation. The request shall be filed with the department or office of the Association that acted as a Party in the proceeding. The head of the department or office shall serve its response on the member or person via facsimile or overnight commercial courier within five days after receipt of the request. If the head of the department or office denies the request, the member or person may file a written request for relief with the NASD Board. The NASD Board shall respond to the request in writing within 14 days after receipt of the request. The NASD Board shall serve its response by facsimile or overnight commercial courier.

* * * * *

9520. Eligibility Proceedings

9521. Purpose

No change.

9522. Initiation of Eligibility Proceeding[s]

(a) [Notice of Disqualification or Ineligibility] *Initiation by Association*

(1) Issuance *of Notice of Disqualification or Ineligibility*

If Association staff has reason to believe that a statutory disqualification exists or that a member or person associated with a member otherwise fails to meet the eligibility requirements of the Association, Association staff shall issue a written notice to the member or associated person. The notice shall specify the grounds for such disqualification or ineligibility.

(2) Notice to Member

A notice issued to a member that is subject to a statutory disqualification or is otherwise ineligible for membership shall state that the member may apply for relief by filing a written application for relief *pursuant to paragraph (c)* with the National Adjudicatory Council within ten days after service of the notice. *If the member fails to file the written application for relief within the 10-day period, the membership of the member shall be canceled, unless the Department of Member Regulation grants an extension for good cause shown.*

(3) Notice to Associated Person

A notice issued to an associated person who is subject to a statutory disqualification or is otherwise ineligible for association shall state that a member may apply for relief on behalf of itself and such person by filing a written application for relief *pursuant to paragraph (c)* with the National Adjudicatory Council within ten days after service of the notice. *If the member fails to file the written application for relief within the 10-day period, the registration of the associated person shall be revoked, unless the Department of Member Regulation grants an extension for good cause shown.*

(4) Service

No change.

(b) [Application by] *Obligation of* Member *to Initiate Proceeding*

A member shall file a written application for relief from the eligibility requirements of the Association *pursuant to paragraph (c)* with the National Adjudicatory Council if the member *determines prior to receiving a notice under paragraph (a) that:*

(1) [determines that it] *the member* is subject to a statutory disqualification or otherwise is no longer eligible for membership;

(2) [determines that] a person associated with [it] *such member* is subject to a statutory disqualification or otherwise is no longer eligible for association with the member; or

(3) *the member* wishes to sponsor the association of a person who is subject to a statutory disqualification or otherwise is ineligible for association with a member.

* * * * *

9525. *Expedited Review*

(a) Direction by Executive Committee

Notwithstanding Rules 9523 and 9524, the NASD Board Executive Committee, upon request of the Statutory Disqualification Committee, may direct an expedited review of a recommended written decision of the Statutory Disqualification Committee if the NASD Board Executive Committee determines that expedited review is necessary for the protection of investors.

(b) Call for Review Period

If a recommended decision is subject to expedited review, a Governor may call the eligibility proceeding for review within seven days after receipt of the recommended written decision.

(c) No Call for Review

If no Governor calls the proceeding for review within the time prescribed, the decision shall become final, and the Statutory Disqualification Committee shall serve the decision on the member, the current or prospective associated person, and Department of Member Regulation pursuant to Rules 9132 and 9134. The decision shall be effective upon service and shall constitute final action of the Association.

(d) Call for Review

If a Governor calls the eligibility proceeding for review within the prescribed time, a review panel shall meet and conduct a review not later than 14 days after the call for review. The review panel shall be composed of the NASD Board Executive Committee, except that the Governor who calls the proceeding for review shall serve on the review panel in lieu of a member of the Executive Committee who has the same classification (Industry, Non-Industry, or Public) as such Governor. The review panel may affirm, modify, or reverse the recommended written decision of the Statutory Disqualification Committee or remand the eligibility proceeding with instructions. The review panel shall prepare, issue, and serve its decision pursuant to Rule 9524(d) and (e).

***9526.* Application to Commission for Review**

No change.

* * * * *

9530. Suspension or Cancellation for Failure to Pay Dues, Fees and Other Charges

9531. Notice

(a) Notice

Association staff may issue a written notice suspending or canceling the membership of a member or the registration of a person who has failed to pay a fee, due, assessment, other charge, or submit a required or information related to such payment.

(b) Service of Notice

Association staff shall serve the notice by facsimile or overnight commercial courier and shall file a copy of the notice with the Office of Hearing Officers.

(c) Effective Date of Notice

A notice issued and served under this Rule shall become effective 15 days after the date of service of the notice.

9532. Hearing

(a) Request for Hearing

Withing five days after the date of service of a notice issued under Rule 9531, the member or person served with such notice may file with the Office of Hearing Officers a written request for a hearing. The request shall state with specificity why the member or persons believes that the notice should be set aside. The request for the hearing shall stay the effective date of the notice.

(b) Hearing Procedures

(1) Appointment of Hearing Officer

If a hearing is requested, the Chief Hearing Officer shall appoint a Hearing Officer to conduct the hearing and decide whether the member or the person's registration should be suspended or canceled.

(2) Parties

The Parties shall be the member or person to whom the notice was issued and the NASD Treasurer.

(3) Time of Hearing

The hearing shall be held within 45 days after the date of service of the notice under Rule 9531. Not later than seven days before the hearing, the Hearing Officer shall serve the Parties with written notice of the date and time of the hearing.

(4) Transmission of Documents

Not later than seven days before the hearing, the NASD Treasurer shall serve the member or person associated with a member via overnight commercial courier with all documents that were considered in connection with the decision to issue a notice under Rule 9531 and provide copies of the same to the Hearing Officer.

(5) Counsel

The Parties may be represented by counsel at a hearing conducted under this Rule.

(6) Evidence

Formal rules of evidence shall not apply to a hearing under this Rule. Not later than four days before the hearing, the Parties shall exchange copies of proposed hearing exhibits and witness lists and provide copies of the same to the Hearing Officer.

(7) Witnesses

A person who is subject to the jurisdiction of the Association shall testify under oath or affirmation. The oath or affirmation shall be administered by a court reporter or a notary public.

(8) Additional Information

At any time during its consideration, the Hearing Officer may direct the Parties to submit additional information. Any additional information submitted shall be provided promptly to all Parties at least one business day before the Hearing Officer renders his or her decision.

(9) Transcript

The hearing shall be recorded and a transcript prepared by a court reporter. A Party may purchase a copy of the transcript from the court reporter at prescribed rates. A witness may purchase a copy of the transcript of his or her own testimony from the court reporter at prescribed rates. Proposed corrections to the transcript may be submitted by affidavit to the Hearing Officer within a reasonable time determined by the Hearing Officer. Upon notice to the participants in the hearing, the Hearing Officer may order corrections to the transcript as requested or sua sponte.

(10) Record

The record shall consist of all documents that were considered in connection with the decision to issue a notice under Rule 9531, the notice issued under Rule 9531, the request for hearing filed under Rule 9532, the transcript of the hearing, and each document or other item of evidence presented to or considered by the Hearing Officer. The Office of Hearing Officers shall be the custodian of the record.

(11) Failure to Appear at Hearing

If a member or person fails to appear at a hearing for which he has notice, the Hearing Officer may dismiss the request for a hearing as abandoned, and the notice issued under Rule 9531 shall become final. Upon a showing of good cause, the Hearing Office may withdraw a dismissal entered pursuant to this subparagraph.

9533. Decision

The Hearing Officer may suspend or cancel the membership of a member or the registration of a person for failure to pay a due, fee, assessment, other charge, or for failure to submit a required report or information related to such payment. The Hearing Officer shall prepare a proposed written decision, and if the Hearing Officer determines that a suspension or cancellation should be imposed, the proposed written decision shall state the grounds for the suspension or cancellation, and in the case of a suspension, the conditions for terminating the suspension. The written decision served under this Rule shall become effective upon service and shall constitute final action of the Association.

9534. Notice of Membership

The Association shall provide notice of a suspension or cancellation under this Rule Series and the grounds therefor in the next membership supplement.

9535. Termination of Suspension

A suspended member or person may file a written request for termination of the suspension on the ground of full compliance with the notice issued under Rule 9531 or, if applicable, the conditions of a decision under Rule 9533, with the Office of Hearing Officers. The Office of Hearing Officers shall respond to the request in writing within five days after receipt of the request. The Office of Hearing Officers shall send the written response via overnight commercial courier or facsimile.

9536. Copies of Notices and Decisions to Member

A copy of a notice or decision under the Rule 9530 Series that is served on a person associated with a member shall be served on such member.

9537. Other Action Not Foreclosed

Action by the Association under the Rule 9530 Series shall not foreclose action by the Association under any other Rule.

* * * * *

9600. Procedures for Exemptions

9610. Application

(a) Where to File

A Member seeking an exemption from Rule 1021, 1022, 1070, 2210, *2320,* 2340, 2520, 2710, 2720, 2810, 2850, 2851, 2860, Interpretive Material 2860–1, 3010, 3210, 3350, 8211, 8212, 8213, 11870, or 11900, Interpretive Material 2110–1, or Municipal Securities Rulemaking Board Rule G–37 shall file a written application with the appropriate department or staff of the Association and provide a copy of the application to the Office of General Counsel of NASD Regulation.

* * * * *

II. Self-Regulatory Organization's Statement of the Purpose of, and Statutory Basis for, the Proposed Rule Change

In its filing with the Commission, NASD Regulation included statements concerning the purpose of and basis for the proposed rule change and discussed any comments it received on the proposed rule change. The text of these statements may be examined at the places specified in Item IV below. NASD Regulation has prepared summaries, set forth in Sections A, B, and C below, of the most significant aspects of such statements.

A. Self-Regulatory Organization's Statement of the Purpose of, and Statutory Basis for, the Proposed Rule Change

1. Purpose

The proposed amendments to the Rules of the Association are being made to permit the Department of Enforcement to amend complaints without Hearing Officer approval, prior to the filing of responsive pleadings; to clarify and consolidate default provisions and shorten the call period for default decisions to 25 days; to require the Office of the General Counsel to issue decisions in settled cases; to change the trigger date for which the timing of motions to introduce new evidence is keyed; to permit Advertising Department staff to impose advertising pre-use filing requirements on members; to consolidate procedures for cancellation or suspension for failure to provide requested information; to simplify and expedite certain non-summary procedures in Rule 9500 series; and for other purposes. A specified discussion of the purpose of the proposed amendments follows.

Rule 0120: The purpose of the proposed change is to amend definition (m) of Rule 0120 to reflect that the National Adjudicatory Council (''NAC'') has replaced the National Business Conduct Committee as the committee of NASD Regulation that acts on behalf of the NASD Regulation Board of Directors with respect to disciplinary and related matters.

The NAC replaced the National Business Conduct Committee pursuant to a corporate reorganization. The revisions to the corporate structure were approved on November 14, 1997.[6] Related changes to the rules describing the NAC's functions in disciplinary proceedings and related matters were approved on December 19, 1997.[7]

Rules 2210 and 2220: Rules 2210(c)(4) and 2220(c) authorize the NASD to require members to file advertisements, sales literature, and education material with the Association before using it in certain instances. The Rules currently provide that the District Business Conduct Committees may impose pre-use filing requirements and may conduct a hearing if a member opposes a pre-use filing requirement. These provisions are inconsistent with the SEC's Order Instituting Public Proceedings Pursuant to Section 19(h)(1) of the Securities Exchange Act of 1934, Making Findings and Imposing Remedial Sanctions (''SEC Order'').[8] Therefore, NASD Regulation has not utilized these procedures since August 1996. Consistent with the SEC Order, the proposed rule change would vest authority to impose a pre-use filing requirement solely with NASD Regulation staff, specifically the Advertising/Investment Companies Regulation Department. Any hearing requested regarding such requirement would be conducted by a Hearing Panel or other adjudicator, as set forth in the non-summary proceedings of the Rule 9510 Series, rather than by a District Business Conduct Committee.

Rule 2320 and 9610: The proposed amendments to Rule 2320 clarify that a request for exemptive relief under Rule 2320 is subject to the same procedural rules, the Rule 9600 Series, to which all other requests for exemptive relief are subject. A conforming change is proposed to Rule 9610.

Rule 8210: Rule 8210 would be amended to clarify that Association staff may specify the location at which a member, associated person, or other person subject to the Association's jurisdiction must testify for the purpose of an investigation, complaint, examination, or proceeding. A few members and persons have questioned the Association's authority to specify such a location; the proposed rule change clarifies the Association's authority to do so.

Rule 8220 Series: Currently, the Rule 8220 Series and the Rule 9510 Series both set forth procedures for suspending or canceling a member or associated person for failure to provide requested information to the Association. The proposed rule change consolidates the provisions of the Rule 8220 Series and the Rule 9510 Series into the Rule 8220 Series.

Currently, the Rule 8220 Series authorizes the NAC to initiate a suspension proceeding for failure to provide requested information, and the Rule 9510 Series authorizes Association staff to initiate a cancellation proceeding for failure to provide requested information. Under the proposed rule change, the Department of Enforcement of NASD Regulation, acting under Board-delegated authority, would be able to initiate a suspension or cancellation proceeding if a member or associated person failed to provide requested information; the Department of Enforcement also would act as a Party in the subsequent proceedings. This authority is consistent with the Department's authority in regular disciplinary proceedings, as set forth in the Rule 9200 Series.[9]

Several hearing procedures would be amended under the proposed rule change. First, the member or associated person who received a notice initiating a cancellation or suspension would file a request for a hearing directly with the NASD Regulation Office of General Counsel, rather than the NAC. The Office of General Counsel is responsible for arranging such hearings.

Second, the proposed rule change would expand the pool of persons who could serve on the subcommittee conducting the hearing to include current and former members of the NAC, the NASD Regulation Board, the NASD Board. At lease one subcommittee member would have to be a current member of the NAC.

Third, the proposed rule change would expand the period in which a hearing must be held from 20 to 30

[6] Securities Exchange Act Release No. 39326 (November 14, 1997), 62 FR 62385 (November 21, 1997) (File No. SR–NASD–97–71)

[7] Securities Exchange Act Release No. 39470 (December 19, 1997), 62 FR 67927 (December 30, 1997) (File No. SR–NASD–97–81).

[8] Securities Exchange Act Release No. 37538 (August 8, 1996), SEC's Order Instituting Public Proceedings Pursuant to Section 19(h)(1) of the Securities Exchange Act of 1934, Making Findings and Imposing Remedial Sanctions, In the Matter of National Association of Securities Dealers, Inc., Administrative Proceeding File No. 3–9056.

[9] See Article VII, Section 2 of the NASD By-Laws and the Delegation Plan.

days. NASD Regulations has determined that 20 days is not a sufficient period both to find panelists who are available and coordinate the schedules of all panelists, Parties, and their attorneys. Lengthening this time period does not prejudice the member or person because once a hearing is requested, a suspension or cancellation cannot take effect until after the proceeding is completed.

Fourth, Rule 8222(b)(3) would be amended to include a provision of current Rule 9514(e), which allows the Association to withhold certain documents enumerated in Rule 9251 that are privileged or constitute attorney work product or are otherwise related to an examination, inspection, or investigation. Finally, the proposed rule change would add a new requirement that if the subcommittee conducting the hearing required that additional information be filed, then such information would have to be distributed promptly to all parties and in all cases not less than one business day before the subcommittee rendered its decision.

Proposed Rule 8223(b) revises the call for review process by placing the authority to conduct a review with a review panel, rather than the full NASD Board. The ability of any Governor to call the proceeding for review remains intact. Under the proposed rule change, a review panel would conduct the review, rather than the full Board. The review panel would be composed of the members of the NASD Board Executive Committee, except that the Governor who called the proceeding for review would serve on the review panel in lieu of an Executive Committee member who has the same classification (Industry, Non-Industry, or Public) as that Governor. The procedures for selecting the Executive Committee member to be excused would be designed in such a way that the same Governor of a particular classification is not excused from every review panel. NASD Regulation proposes this change because it will allow the suspension or cancellation proceeding to be concluded more quickly. The NASD Board Executive Committee is a smaller body designed to meet on an as-needed basis and can convene more easily than the Board. The review panel in most cases could conveniently arrange its review around Executive Committee meetings because most of the participants would be the same. Under the current rule, a review generally would be deferred to the next Board meeting, which might be as much as two months later.[10]

The review panel composition also is consistent with the SEC Order in that a respondent in the proceeding will still have the benefit of a balanced body conducting the review. Under the NASD By-Laws, as revised to be consistent with the SEC Order, the NASD Board Executive Committee must reflect the percentages of Non-Industry and Public Governors on the Board. Those percentages would be maintained on the review panel by having the Governor initiating the call for review serve as a substitute for an Executive Committee member of the same classification.

The reinstatement provisions set forth in proposed Rule 8225 are amended by providing that requests to terminate a suspension should be filed with the Department of Enforcement. If the Department denies the request, then a further request for relief may be filed with the review panel that rendered the decision in the underlying proceeding, as long as the request for relief is filed within 30 days after service of the decision. The review panel would be most familiar with the decision and issues during this period. If the request for relief is filed more than 30 days after service of the decision, then the NAC would act on the request for relief. This would ensure that the review panel's responsibilities conclude shortly after its decision is rendered and do not continue for an indefinite period.

Reference throughout the Rule Series to service by commercial courier are revised to require service by overnight commercial courier to ensure that service is effected quickly.

Interpretive Material 8310–2: Interpretive Material 8310–2 provides for the release of disciplinary information to the public. The proposed rule change would amend this Interpretation to permit the NASD to release information about suspensions and cancellations imposed under the Rule 8220 Series, unless the NAC determines otherwise. For example, the NAC may determine not to release such information if a member subject to a suspension quickly cures the failure to provide information and the suspension is quickly lifted.

Rule 9212: The proposed change to Rule 9212 enables the Department of Enforcement to amend complaints, without hearing officer approval, prior to the filing of responsive pleadings. Rule 9212 currently requires the Department of Enforcement to move to amend any complaint, and a Hearing Officer to grant such a motion before the complaint may be amended. Generally such motions are routinely granted if the motion is filed before responsive pleadings are filed. The requirement of making such motions and obtaining Hearing Officer approval can be eliminated without any unfairness imposed on respondents. This change is consistent with most judicial practice.

Rules 9215, 9241, 9269 and 9312: The proposed amendments to Rules 9215, 9241, 9269 and 9312 are designed to clarify and consolidate the NASD Code of Procedure (''Code'') default provisions, and to shorten the call for review period for default decisions to 25 days.

The current rules relating to default decision are set forth in Rules 9215, 9241, 9269 and 9312. Rule 9269, the one rule exclusively devoted to defaults, concerns only defaults as a result of failing to appear at a hearing. Defaults also and indeed more frequently occur as a result of failing to file any answer at all. The proposed amendments consolidate many of the default provision in Rule 9269. Accordingly, Rule 9269 will cover defaults resulting from failure to appear at a hearing, as well as failure to answer complaints or appear at pre-hearing conferences or at hearings.

These amendments also make non-substantive changes that clarify the existing rules. The changes clarify that the default decisions issued by Hearing Officers should include the same contents as decision issued in litigated cases. The amendments also clarify that either the Review Subcommittee or the NAC may set aside a default judgment. Furthermore, the changes clarify that defaults need to be appealed within 25 days after the service of the decision, and that sanctions are effective 30 days after service of the decision (other than bars and suspensions which are effective immediately). These time periods are already set forth in Rules 9360 and 9311(a), respectively.

In addition, the proposed changes to Rule 9312 shorten the period when the General Counsel may call a default decision for review. The rules currently give the General Counsel 45 days to determine whether to call a default decision for review, which is the same call period for litigated decisions. Twenty-five days, however, is the period proposed for appealing a default decision. The additional 20 days for the call decision currently allowed in the Code is appropriate for litigated decisions where the NAC or the Review Subcommittee may prefer to see if a case will be appealed before making its call determination. Appeals of default

[10] The NASD Board generally meets every two months.

decisions are infrequent, and the call decisions generally are made within the 25 day period. Shortening the call period for default decision thus is practicable, and will have the benefit of putting into effect default decisions (which often involve bars and expulsions) sooner.

Rule 9270: The purpose of amending Rule 9270 is to establish that the issuance of decisions, in settled cases, is to be done by the General Counsel. Rule 9270 currently requires that decisions relating to accepted offers of settlement be issued by the Office of Hearing Officers. Returning decisions relating to offers of settlement, however, to the Hearing Officers offer acceptance by the NAC, the Review Subcommittee or the General Counsel serves no useful purpose and only introduces additional delay and the possibility of error. Moreover, issuance by the Office of Hearing Officers makes it appear that Hearing Officers have approved the settlements when they do not have the authority to do so.

Rule 9346: The change proposed to Rule 9346(b) would impose the requirement that motions to introduce new evidence in appealed or called cases be made within 30 days of service of the index to the record under Rule 9321. Rule 9346(b) currently requires that motions to introduce new evidence in these cases be made within 30 days of service of the notice of appeal (or within 35 days of service of notice of a call for review). Because motions to introduce new evidence generally can best be made after the parties have received copies of the official index to the record, it is logical to key the timing of such motions to the parties' receipt of the index.

Rule 9360: Under the proposed amendments to Rule 9360, sanctions generally continue to become effective 30 days after the date of service of the decision constituting final disciplinary action. However, the date would no longer be established by the Chief Hearing Officer. This change is proposed because of Chief Hearing Officer plays no part in the final stages of a disciplinary proceeding appealed or called for review. Also, the proposed amendments to Rule 9360 incorporate references to Rules 9349 and 9351 into Rule 9360. This change is made to clarify the applicability of Rule 9360.

Rule 9500 Series, generally: The purpose of the proposed rule change to the Rule 9500 Series is to simplify and consolidate certain procedures. The Rule 9510 Series would be amended by deleting certain non-summary proceedings and consolidating them with other rules or by replacing them with simple procedures in a separate rule series. NASD Regulation believes that such changes are necessary because most of the non-summary proceedings involve subject matters that do not warrant an initial adjudication by Board-level panelists as provided in the current Rule 9510 Series; an initial adjudication by staff or NAC is more appropriate.

Rule 9510 Series: The Rule 9510 Series would be simplified by deleting certain non-summary proceedings and consolidating them with other rules or by replacing the current procedures with simpler procedures in a separate rule series. As noted above, the provisions of the Rule 9510 Series and the Rule 8220 Series, which both relate to failure to provide requested information, would be consolidated into the Rule 8220 Series. Similarly, the non-summary proceedings for statutory disqualification matters would be deleted from the Rule 9510 Series, and the Rule 9520 Series, which governs regular statutory disqualification matters, would be amended by adding new procedures for expediting the review of a statutory disqualification proceeding when necessary to protect investors.[11] Finally, non-summary proceedings for failure to pay fees, dues, assessments, and other charges would be deleted from the Rule 9510 Series, and new procedures providing for a hearing by a Hearing Officer would be added as a new Rule 9530 Series.

The proposed rule change would amend Rule 9511, which sets forth the purpose of the Rule 9510 Series, to reflect these changes and to remove redundant provisions that appear in Rules 9512 and 9513. As revised, Rule 9511 would provide that the Rule Series governs: (1) summary proceedings authorized by Section 15A(h)(3) of the Act; and (2) non-summary proceedings to impose (A) a suspension or cancellation for failure to comply with an arbitration award or a settlement agreement related to an arbitration or mediation pursuant to Article VI, Section 3 of the NASD By-Laws; (B) a suspension or cancellation of a member, or a limitation or prohibition on any member, associated person, or other person with respect to access to services offered by the Association or a member thereof, if the Association determines that such person does not meet the qualification requirements or other prerequisites for such access or such person cannot be permitted to continue to have such access with safety to investors, creditors, members, or the Association; or (C) an advertising pre-use filing requirement pursuant to Rules 2210 and 2220.[12]

Rule 9513 would be amended to provide the Association may, rather than shall, initiate non-summary proceedings; this amendment reflects NASD Regulation's prosecutorial discretion. Rule 9513 also would be amended to make technical corrections to cross-references to Rule 9511.

The proposed rule change revises the hearing and decision provisions of Rule 9514. First, proposed Rule 9514(a)(1) contains a non-substantive, simplifying amendment that provides that a member or person who requests a hearing must set forth the specific grounds for setting aside the notice, rather than listing in the Rule each type of action that the member would seek to reverse or oppose at the hearing. Second, the Rule would be amended to provide that a member that received a notice of an advertising pre-use filing requirement under Rule 2210 or 2220 would have 30 days to request a hearing. Under the current Rule, which does not address pre-use filing requirements, a member or person has seven days to request a hearing in a non-summary proceeding. NASD Regulation proposes to provide additional time in the case of advertising pre-use filing requirements because members may need additional time to consider whether to comply with or contest the requirements. Third, the custodian of record provision under Rule 9514(f)(5) authorizes the Office of Hearing Officers to act as custodian for non-summary proceedings for a failure to comply with an arbitration award or settlement agreement related to an NASD arbitration or mediation. Under

[11] Under the current Rule 9510 Series, non-summary proceedings may be used for: canceling the membership of a member that becomes ineligible for continuance in membership, or that continue to be associated with an ineligible person, or suspending or barring a person from continuing to be associated with a member because such person is or becomes ineligible for association under Article III, Section 3 of the NASD By-Laws. NASD Regulation has interpreted the Rule 9510 Series to apply to both statutory disqualification matters and to failures to meet membership qualification requirements. e.g., failure to have two principals or obtain a waiver of such requirement in accordance with Rule 1021(e). Under the proposed rule change, all statutory disqualification matters would be governed by the Rule 9520 Series. However the Rule 9510 Series will still be available for non-summary proceedings initiated for failure to meet membership qualification requirements. See, proposed Rule 9511(a)(2)(B).

[12] In a summary proceeding, the Association may impose a suspension, limitation, or prohibition prior to holding a hearing. In a non-summary proceeding, a respondent is given notice and an opportunity for a hearing prior to the Association taking any action against a respondent. The proposed rule change simplifies the titles of various rule provisions by referring to a ''summary proceeding'' or a ''non-summary proceeding,'' rather listing the various types of action that the Association may take in each type of proceeding.

Rule 9514(b)(1), Hearing Officers serve as the adjudicators in such proceedings, and as such, the Office of Hearing Officers is a more appropriate custodian that the NASD Regulation Office of General Counsel. Finally, cross-references to Rule 2210 and 2220 are added to Rule 9514.

Rule 9516 would be amended to provide that a request for reinstatement could be made after either a summary or a non-summary proceeding under the Rule 9510 Series. Currently, reinstatement is available only after a non-summary proceeding.

Rule 9520 Series: The Rule 9520 Series, which concerns statutory disqualifications, is amended to clarify certain procedures and to expedite statutory disqualification proceedings if necessary to protect investors. Rule 9522(a) is amended to clarify that although a statutory disqualification proceeding may be initiated by the Association, a member has an independent obligation to initiate such a proceeding if it wishes to continue to associate with a statutorily disqualified person. The Rule is further amended to provide that if a member does not respond to a statutory disqualification notice issued by the Association by filing a request for relief within ten days, the member's membership may be canceled and the associated person's registration may be revoked, unless the NAC grants an extension of time to respond for good cause shown.

NASD Regulation proposes to amended Rule 9525 to provide for an expedited review of statutory disqualification proceedings if the Statutory Disqualification Committee requests an expedited review and the NASD Board Executive Committee determines that such action is necessary for the protection of investors. In such a case, any Governor could call the proceeding for review. If such a call were made, a review panel would conduct the review.

As in proposed Rule 8223(b)(2), the review panel would be composed of the NASD Board Executive Committee, except that the Governor who called the proceeding for review would serve on the review panel in lieu of an Executive Committee member who has the same classification (Industry, Non-Industry, or Public) as such Governor. The procedures for selecting the member of the Executive Committee member who will be excused will be designated in such a way that the same Governor of a particular classification is not excused from every review panel. NASD Regulation proposes this change because it will allow the eligibility proceeding to be concluded more quickly for the protection of investors, rather than having to wait to conduct the review at the next Board meeting.

Rule 9530 Series: The proposed Rule 9530 Series sets forth procedures for suspending or canceling the membership of a member or the registration of an associated person who fails to pay fees, dues, assessments, or other charges. Procedures for such a cancellation or suspension are currently set forth in the Rule 9510 Series. Under the proposed rule change, the NASD Treasurer would be authorized to initiate such proceedings by sending a notice to the member or associated person. The hearing would be conducted by a Hearing Officer, who would be authorized to suspend or cancel the membership of a member or the registration of a person. The hearing procedures are modeled on the proposed Rule 8220 Series.

The proposed rule change does not include a call for review because the issues to be resolved in this type of proceeding are narrow and largely administrative. NASD Regulation has determined that it would be more efficient to have one Hearing Officer conduct the hearing and render a final decision. Hearing Officers are well-suited to resolve the issues presented in hearings for failure to pay fees due to their training and experience in the NASD's disciplinary proceedings under the Rule 9200 Series and in non-summary proceedings for failure to pay arbitration awards under the Rule 9510 Series.

2. Statutory Basis

NASD Regulation believes that the proposed rule change is consistent with the provisions of Section 115A(b)(6) of the Act,[13] which requires, among other things, that the Association's rules be designed to prevent fraudulent and manipulative acts and practices, to promote just and equitable principles of trade, and, in general, to protect investors and the public interest. The NASD believes that the proposed rule change is consistent with Section 15A(b)(7) of the Act[14] in that it furthers the statutory mandate that the Association establish rules providing that ''its members and persons associated with its members shall be appropriately disciplined for violation of any provision of this title, the rules or regulations thereunder, the rules of the Municipal Securities Rulemaking Board, or the rules of the Association. * * *'' The rule change is also consistent with Section 15A(b)(8) of the Act[15] in that it furthers the statutory goals of providing a fair procedure for disciplining members and persons associated with members.

B Self-Regulatory Organization's Statement on Burden on Competition

NASD Regulation does not believe that the proposed rule change will result in any burden on competition that is not necessary or appropriate in furtherance of the purposes of the Act, as amended.

C. Self-Regulatory Organization's Statement on Comments on the Proposed Rule Change Received From Members, Participants, or Others

Written comments were neither solicited nor received.

III. Date of Effectiveness of the Proposed Rule Change and Timing for Commission Action

Within 35 days of the date of publication of this notice in the **Federal Register** or within such longer period (i) as the Commission may designate up to 90 days of such date if its finds such longer period to be appropriate and publishes its reasons for so findings or (ii) as to which NASD Regulations consents, the Commission will:

(A) by order approve such proposed rule change, or

(B) institute proceedings to determine whether the proposed rule change should be disapproved.

IV. Solicitation of Comments

Interested persons are invited to submit written data, views, and arguments concerning the foregoing, including whether the proposed rule change is consistent with the Act. Persons making written submissions should file six copies thereof with the Secretary, Securities and Exchange Commission, 450 Fifth Street, N.W., Washington, D.C. 20549. Copies of the submission, all subsequent amendments, all written statements with respect to the proposed rule change that are filed with the Commission, and all written communications relating to the proposed rule change between the Commission and any person, other than those that may be withheld from the public in accordance with the provisions of 5 U.S.C. 552, will be available for inspection and copying in the Commission's Public Reference Room. Copies of such filing will also be available for inspection and copying at the principal office of the NASD. All submissions should refer to the file

[13] 15 U.S.C. 78p–3(b)(6).

[14] 15 U.S.C. 78p–3(b)(7).

[15] 15 U.S.C. 78p–3(b)(8).

number SR–NASD–98–57 and should be submitted by September 24, 1998.

For the Commission, by the Division of Market Regulation, pursuant to delegated authority.[16]

Jonathan G. Katz,

Secretary.

[FR Doc. 98–23771 Filed 9–2–98; 8:45 am]

BILLING CODE 8010–01–M

SECURITIES AND EXCHANGE COMMISSION

[Release No. 34–40370; File No. SR–Phlx–98–34]

Self-Regulatory Organizations; Notice of Filing and Immediate Effectiveness of Proposed Rule Change by the Philadelphia Stock Exchange, Inc., Relating to an Additional Participation in Wheel Trades Where the Enhanced Specialist Participation Applies

August 27, 1998.

Pursuant to Section 19(b)(1) of the Securities Exchange Act of 1934 (''Act''),[1] and Rule 19b–4 thereunder,[2] notice is hereby given that on August 11, 1998, the Philadelphia Stock Exchange, Inc. (''Phlx'' or ''Exchange''), filed with the Securities and Exchange Commission (''Commission'' or ''SEC'') the proposed rule change as described in Items I, II, and III below, which Items have been prepared by the Exchange.[3] The Commission is publishing this notice to solicit comments on the proposed rule change from interested persons.

I. Self-Regulatory Organization's Statement of the Terms of Substance of the Proposed Rule Change

The Phlx proposes to amend Options Floor Procedure Advice F–24, AUTO–X Contra-Party Participation (The Wheel), to allow specialists an additional participation in Wheel trades where the Enhanced Specialist Participation applies, with unanimous consent of the Wheel participants in that option. Specifically, the Exchange proposes to add the proposed enhanced specialist participation to paragraph (e), stating with the unanimous consent of Wheel participants, the specialist shall receive a split of twice the contracts where the Enhanced Specialist Participation of Rule 1014(g)(ii) applies. The text of the proposed rule change is set forth below. Proposed new language is in italics.

F–24 AUTO–X Contra-Party Participation (The Wheel)

(a)–(d) No change.

(e) Wheel Rotation/Assigning Contracts—AUTO–X participation shall be assigned to Wheel Participants on a rotating basis, beginning at a random place on the rotational Wheel each day from those participants signed-on in that listed option at the time. At a minimum, the Wheel shall rotate and assign contracts depending upon the size of the AUTO–X order, as follows:

1–10 contracts	Every 2 contracts.
11–25 contracts	Every 5 contracts.
26 and more	Every 10 contracts.

The Options Committee, or its designees, may approve a Wheel rotation in a size larger than the minimum stated above, if requested by the specialist and Wheel participants. However, the Wheel may not rotate in a size larger than ten contracts.

Each remaining portion shall be successively assigned to individual Wheel Participants on that same basis. The specialist shall receive the first execution of the day; thereafter, if four or less ROTs are participating on the Wheel, the specialist shall participate in a normal rotation. However, if an average of five to 15 ROTs have signed-on the Wheel, the specialist shall receive every fifth execution; if an average of 16 or more ROTs have signed on the Wheel, the specialist shall receive every tenth execution, unless Wheel participation falls below ten participants at any time, then the specialist shall automatically participate in a normal rotation.

Exception to normal rotation: With the unanimous consent of Wheel participants in an option, the specialist shall receive twice the contracts where the Enhanced Specialist Participation of Rule 1014(g)(ii) applies. This exception shall apply for the Enhanced Specialist Participation pilot program period.

(f) No change.

II. Self-Regulatory Organization's Statement of the Purpose of, and Statutory Basis for, the Proposed Rule Change

In its filing with the Commission, the Exchange included statements concerning the purpose of and basis for the proposed rule change and discussed any comments it received on the proposed rule change. The text of these statements may be examined at the places specified in Item IV below. The Exchange has prepared summaries, set forth in sections A, B, and C below, of the most significant aspect of such statements.

A. Self-Regulatory Organization's Statement of the Purpose of, and Statutory Basis for, the Proposed Rule Change

1. Purpose

The Wheel is an automated mechanism for assigning trade participation among specialists and Registered Options Traders (''ROTs'') on a rotating basis, as contra-side participants to AUTO–X orders. AUTO–X is the automatic execution feature of the Exchange's Automated Options Market (''AUTOM'') system,[4] which provides customers with automatic executions of eligible option orders at displayed markets. The Exchange's detailed Wheel provisions appear as Advice F–24.[5] The purpose of the Wheel is to increase the efficiency of order execution through AUTO–X by including participating floor traders in the automated assignment of contra-parties to incoming AUTO–X orders. Thus, the Wheel is intended to make AUTO–X more efficient, as contra-side participation is assigned automatically, and no longer entered manually.

The Enhanced Specialist Participation is a pilot program whereby a specialist may select 50% of his/her issues for an enhanced split.[6] Pursuant to Phlx Rule 1014(g)(ii), the enhanced split applies where an equity option or index option specialist is on parity [7] with one or more controlled accounts for orders involving more than five contracts. Specifically, when such specialist is on parity with one controlled account, the specialist receives 60% of the contracts and the controlled account receives the remaining 40%; when a specialist is on parity with two controlled accounts, the specialist receives 40% of the contracts and each controlled account receives

[16] 17 CFR 200.30–3(a)(12).

[1] 15 U.S.C. 78s(b)(1).

[2] 17 CFR 240.19b–4.

[3] On July 16, 1998, the Exchange filed a similar proposed rule change (File No. SR–Phlx–98–31). The Commission suggested that the Exchange make certain changes, and, rather than amend the filing, the Exchange determined to withdraw the filing and resubmit it. The Exchange withdrew SR–Phlx–98–31 on August 11, 1998.

[4] AUTOM is an electronic order routing system for option orders. *See* Phlx Rule 1080.

[5] *See* Securities Exchange Act Release No. 35033 (Nov. 30, 1994), 59 FR 63152 (Dec. 7, 1994) (order approving Advice F–24).

[6] Initially, the program was approved as a one-year pilot until August 26, 1995. *See* Securities Exchange Act Release No. 34606 (Aug. 26, 1994), 59 FR 45741 (Sept. 2, 1994). The pilot has subsequently been revised and extended and is currently scheduled to expire on December 31, 1998. *See* Securities Exchange Act Release Nos. 35028 (Nov. 30, 1994), 59 FR 63151 (Dec. 7, 1994); 35429 (Mar. 1, 1995), 60 FR 12802 (Mar. 8, 1995); 36122 (Aug. 18, 1995), 60 FR 44530 (Aug. 28, 1995); 37254 (Aug. 5, 1996), 61 FR 42080 (Aug. 13, 1996); and 38924 (Aug. 11, 1997), 62 FR 44160 (Aug. 19, 1997); and 39401 (Dec. 4, 1997), 62 FR 65300 (Dec. 11, 1997).

[7] Pursuant to Phlx Rule 1014(g)(i), a controlled account includes any account controlled by or under common control with a member broker-dealer.

30%; and when a specialist is on parity with three or more controlled accounts, the specialist is counted as two crowd participants for purposes of allocating the contracts.[8] In all of these situations, if a customer is on parity, the customer may not receive a lesser allotment than any other crowd participant, including the specialist.

The Phlx proposes to amend Advice F–24, AUTO–X Contra-Party Participation (the Wheel), to allow specialists an additional participation in Wheel trades where the Enhanced Specialist Participation pilot applies pursuant to Rule 1014. The proposed additional participation in Wheel trades would be in effect for the Enhanced Specialist Participation pilot period. For systems reasons, the additional participation would be in the form of a second sign-on for the Wheel,[9] as opposed to the 60%/40% two crowd participant split discussed above. The second sign-on is contingent upon unanimous consent of the Wheel participants in that option, which is intended to implement the proposal where the ROTs on the Wheel agree that more participation for the specialist and hence, less for the ROTs, is fair and appropriate. The Exchange has determined that Wheel participants, as opposed to the whole trading crowd, should consent because those market makers who do not choose to sign-on to the Wheel are not affected by the additional Wheel participation. The purpose of the proposal is to extend the enhanced specialist split to the Wheel. In adopting the enhanced specialist split, the Exchange identified the need to attract new specialist units as well as to retain and encourage current specialist units to vigorously trade existing options and aggressively seek and apply for newly allocated options.

2. Basis

The Exchange believes the proposed rule change is consistent with Section 6(b) of the Act,[10] in general, and furthers the objectives of Section 6(b)(5),[11] in particular, in that it is designed to promote just and equitable principles of trade of trade, to prevent fraudulent and manipulative acts and practices, to remove impediments to and perfect the mechanism of a free and open market and a national market system, and to protect investors and the public interest. The Exchange believes that the proposal will serve to aid the Exchange in attracting and retaining well-capitalized specialist units to the Exchange without unreasonably restraining competition or harming investors.

B. Self-Regulatory Organization's Statement on Burden on Competition

The Exchange does not believe that the proposed rule change will impose any burden on competition that is not necessary or appropriate in furtherance of the purposes of the Act.

C. Self-Regulatory Organization's Statement on Comments on the Proposed Rule Change Received From Members, Participants, or Others

Written comments on the proposed rule change were neither solicited nor received.

III. Date of Effectiveness of the Proposed Rule Change and Timing for Commission Action

Because the foregoing proposed rule change does not: (i) significantly affect the protection of investors or the public interest; (ii) impose any significant burden on competition; and (iii) become operative for 30 days from August 11, 1998, the date on which it was filed, and the Exchange provided the Commission with written notice of its intent to file the proposed rule change at least five business days prior to the filing date,[12] it has become effective pursuant to Section 19(b)(3)(A) of the Act[13] and Rule 19b–4(e)(6) thereunder.[14] In approving this rule, the Commission notes that it has considered the rule's impact on efficiency, competition, and capital formation. 15 U.S.C. 78c(f).

IV. Solicitation of Comments

Interested persons are invited to submit written data, views and arguments concerning the foregoing, including whether the proposed rule change is consistent with the Act. Persons making written submissions should file six copies thereof with the Secretary, Securities and Exchange Commission, 450 Fifth Street, NW, Washington, DC 20549. Copies of the submission, all subsequent amendments, all written statements with respect to the proposed rule change that are filed with the Commission, and all written communications relating to the proposed rule change between the Commission and any person, other than those that may be withheld from the public in accordance with the provisions of 5 U.S.C. 552, will be available for inspection and copying in the Commission's Public Reference Room, 450 Fifth Street, NW, Washington, DC 20549. Copies of such filing will also be available for inspection and copying at the principal office of the Phlx. All submissions should refer to File No. SR–Phlx–98–34 and should be submitted by September 24, 1998.

For the Commission, by the Division of Market Regulation, pursuant to delegated authority.[15]

Jonathan G. Katz,

Secretary.

[FR Doc. 98–23759 Filed 9–2–98; 8:45 am]

BILLING CODE 8010–01–M

[8] ''Parity'' refers to time parity (*i.e.*, orders entered simultaneously). *See* Phlx Rules 119, 1014(g)(i).

[9] The Wheel has no built-in limitation as to the number of floor traders who may be signed on.

[10] 15 U.S.C. 78f(b).

[11] 15 U.S.C. 78f(b)(5).

[12] The Exchange provided advance written notice of its intent to file proposed rule change SR–Phlx–98–31, which proposed change it subsequently withdrew and replaced with this proposed rule change. *See* note 3, *supra*. The Commission accepts the advance notice provided for SR–Phlx–98–31 as advance notice of this proposed rule change.

[13] 15 U.S.C. 78s(b)(3)(A).

[14] 17 CFR 240.19b–4(e)(6).

[15] 17 CFR 200.30–3(a)(12).

SECURITIES AND EXCHANGE COMMISSION

[Release No. 34–40374; File No. SR–Phlx–98–18]

Self-Regulatory Organizations; Notice of Filing of Proposed Rule Change by the Philadelphia Stock Exchange, Inc., Relating to Options Floor Procedure Advice F–24, Auto-X Contra Party Participation (the Wheel)

August 27, 1998.

Pursuant to Section 19(b)(1) of the Securities Exchange Act of 1934 (''Act''),[1] notice is hereby given that on June 5, 1998, the Philadelphia Stock Exchange, Inc. (''Phlx'' or ''Exchange''), filed with the Securities and Exchange Commission (''Commission'' or ''SEC'') the proposed rule change as described in Items I, II, and III below, which Items have been prepared by the Exchange. The Commission is publishing this notice to solicit comments on the proposed rule change from interested persons.

I. Self-Regulatory Organization's Statement of the Terms of Substance of the Proposed Rule Change

The Phlx proposes to amend Options Floor Procedure Advice F–24 (''Advice F–24''), Auto-X Contra Party Participation (the Wheel), paragraph (d), to state that, in extraordinary circumstances, two Floor Officials may require all assigned Registered Options Traders (''ROTs'') who signed onto the Wheel at any time during the last thirty business days to participate on the Wheel. Additionally, the Phlx is

[1] 15 U.S.C. 78s(b)(1).

proposing an amendment to Advice F–24, paragraph (c)(iii), to expressly require ROTs to sign off the Wheel when leaving the Wheel assignment area for more than a brief interval.[2] Because paragraph (c)(iii) is subject to a fine schedule, the Exchange also proposes to amend its minor rule violation enforcement and reporting plan.[3] The text of the proposed rule change is set forth below. Proposed new language is in italic; proposed deletions are in brackets.

F–24 AUTO–X Contra-Party Participation (the Wheel)

(a)–(b) No change.

(c) Participation Requirements and Sign-on/off—Specialists on the Options Floor are required to participate on the Wheel in assigned issues in accordance with paragraph (e) of this Advice.

(i)–(ii) No change.

(iii) If an ROT *who is* signed on the Wheel [is away from] *leaves* the Wheel assignment area for more than a brief interval, *the ROT is responsible to sign off the Wheel. If an ROT fails to do so,* a Floor Official shall: (A) remove the ROT from any Wheel participation for the remainder of the trading day; and (B) issue a fine pursuant to the fine schedule below. If such ROT is assigned a Wheel trade while away from the Wheel assignment area for more than a brief interval, that ROT is responsible for all trades assigned to his/her ROT account unit the sign-off is processed.

FINE SCHEDULE (Implemented on a one year running calendar basis)

F–24(c)(iii)

1st Occurrence ...	Warning.
2nd Occurrence	$100.00.
3rd Occurrence ..	$250.00.
4th and Thereafter.	Sanction is discretionary with Business conduct Committee.

(d)–(e) No change.

[2] The Phlx defines ''brief'' to mean 5 minutes or less, or in matters of a dispute, the amount of time it takes to call in a Floor Official and inform him/her of the issue at hand. *See* Securities Exchange Act Release No. 38881 (July 28, 1997), 62 FR 41986 (Aug. 4, 1997) (order approving changes to Advice F–24).

[3] The Phlx's minor rule violation enforcement and reporting plan (''minor rule plan''), codified in Phlx Rule 970, contains floor procedure advice with accompanying fine schedules. Rule 19d–1(c)(2) under the Act authorizes national securities exchanges to adopt minor rule violation plans for summary discipline and abbreviated reporting. Rule 19d–1(c)(1) under the Act requires prompt filing with the Commission on final disciplinary action. However, minor rule violations not exceeding $2,500 are deemed not final, thereby permitting periodic, as opposed to immediate, reporting.

II. Self-Regulatory Organization's Statement of the Purpose of, and Statutory Basis for, the Proposed Rule Change

In its filing with the Commission, the Exchange included statements concerning the purpose of and basis for the proposed rule change and discussed any comments it received on the proposed rule change. The text of these statements may be examined at the places specified in Item IV below. The Exchange has prepared summaries, set forth in sections A, B, and C below of the most significant aspects of such statements.

A. Self-Regulatory Organization's Statement of the Purpose of, and Statutory Basis for, the Proposed Rule Change

1. Purpose

The Wheel is an automated mechanism for assigning floor traders (*i.e.,* specialists and ROTs), on a rotating basis, as contra-side participants for AUTO–X orders. AUTO–X is the automatic execution feature of the Exchange's Automated Options Market (''AUTOM'') system,[4] which provides customers with automatic executions of eligible option orders at displayed markets.

The Exchange's Wheel provisions were approved by the Commission in 1994 as Advice F–24.[5] The purpose of the Wheel is to increase the efficiency and liquidity of order execution through AUTO–X by including certain floor traders in the automated assignment of contra-parties to incoming AUTO–X orders.[6] Thus, the Wheel is intended to make AUTO–X more efficient, as contra-side participation is assigned automatically, and no longer entered manually. The Wheel is also intended to include ROTs, as opposed to solely specialists, as a contra-side to AUTO–X orders. Although specialists are required to participate on the Wheel, currently, ROT participation is voluntary, absent extraordinary circumstances.

The Phlx is hereby proposing that an extraordinary circumstances, to promote liquidity, two Floor Officials may require all ROTs who signed onto the Wheel at any time during the last thirty business days to participate on the Wheel. This proposed amendment to Advice F–24(d) removes the broader ability to require all ROTs to sign on its extraordinary circumstances by limiting the provision of ROTs who have previously signed on. Thus, ROTs who had not signed on to the Wheel in the past thirty days would not be subject to this provision. The purpose of this change is to establish a more equitable sign-on requirement, affecting only those ROTs who have previously participated on the Wheel.

Additionally, the Phlx is proposing an amendment to Advice F–24(c)(iii) to expressly require ROTs to sign off the Wheel when leaving the Wheel assignment area for more than a brief interval.[7] The purpose of this aspect of the amendment is to clarify the obligations of an ROT to sign off the Wheel by incorporating affirmative language into Advice F–24(c)(iii). The proposal is designed to ensure that ROTs are aware of and meet the responsibilities pertaining to the sign-off requirements on the Wheel

2. Basis

The Exchange believes the proposed rule change is consistent with Section 6(b) of the Act,[8] in general, and furthers the objectives of Section 6(b)(5),[9] in particular, in that it is designed to promote just and equitable principles of trade, prevent fraudulent and manipulative acts and practices, facilitate transactions in securities, remove impediments to and perfect the mechanism of a free and open market and a national market system, as well as protect investors and the public interests, by promoting liquidity and equity in the marketplace and clarifying ROTs' responsibilities with respect to sign-off requirements and ensuring they meet their responsibilities.

B. Self-Regulatory Organizations's Statement on Burden on Competition

The Exchange does not believe that the proposed rule change will impose any burden on competition that is not necessary or appropriate in furtherance of the purposes of the Act.

[4] AUTOM is an electronic order routing system for option orders. *See* Phlx Rule 1080.

[5] Securities Exchange Act Release No. 35033 (Nov. 30, 1994), 59 FR 63152 (Dec. 7, 1994) (order approving Advice F–24).

[6] The Exchange has clarified the operation of the Wheel. Telephone conversation between Linda S. Christie, Counsel, Phlx, and Lisa Henderson, Attorney, Division of Market Regulation, SEC (July 28, 1998).

[7] The Exchange has clarified that ROTs who signed off to leave the wheel assignment area may return and sign back on to the Wheel the same day. Telephone conversation between Linda S. Christie, Counsel, Phlx, and Lisa Henderson, Attorney, Division of Market Regulation, SEC (July 23, 1998).

[8] 15 U.S.C. 78f(b).

[9] 15 U.S.C. 78f(b)(5).

C. Self-Regulatory Organization's Statement on Comments on the Proposed Rule Change Received From Members, Participants, or Others

Written comments on the proposed rule change were neither solicited nor received.

III. Date of Effectiveness of the Proposed Rule Change and Timing for Commission Action

Within 35 days of the date of publication of this notice in the **Federal Register** or within such longer period (i) as the Commission may designate up to 90 days of such date if it finds such longer period to be appropriate and publishes its reasons for so finding or (ii) as to which the Exchange consents, the Commission will:

(A) By order approve such proposed rule change, or

(B) Institute proceedings to determine whether the proposed rule change should be disapproved.

IV. Solicitation of Comments

Interested persons are invited to submit written data, views and arguments concerning the foregoing, including whether the proposed rule change is consistent with the Act. Persons making written submissions should file six copies thereof with the Secretary, Securities and Exchange Commission, 450 Fifth Street, NW, Washington, DC 20549. Copies of the submission, all subsequent amendments, all written statements with respect to the proposed rule change that are filed with the Commission, and all written communications relating to the proposed rule change between the Commission and any person, other than those that may be withheld from the public in accordance with the provisions of 5 U.S.C. 552, will be available for inspection and copying in the Commission's Public Reference Room, 450 Fifth Street, NW, Washington, DC 20549. Copies of such filing will also be available for inspection and copying at the principal office of the Phlx. All submissions should refer to File No. SR–Phlx–98–18 and should be submitted by September 24, 1998.

For the Commission, by the Division of Market Regulation, pursuant to delegated authority.[10]

Jonathan G. Katz,

Secretary.

[FR Doc. 98–23770 Filed 9–2–98; 8:45 am]

BILLING CODE 8010–01–M

[10] 17 CFR 200.30–3(a)(12).

SOCIAL SECURITY ADMINISTRATION

Agency Information Collection Activities; Submissions for OMB Review

This notice lists information collection packages that have been sent to the Office of Management and Budget (OMB) for clearance, in compliance with PL. 104–13 effective October 1, 1995, The Paperwork Reduction Act of 1995.

1. Disability Determination and Transmittal—0960–0437. The information collected on form SSA–831 is used by the Social Security Administration (SSA) to document the State Disability Determination Services (SDDS) decision about whether an individual who applies for disability benefits is eligible for those benefits based on his or her alleged disability. SSA also uses this form for program management and evaluation. The respondents are SDDS employees who make disability determinations for SSA.

Number of Respondents: 3,578,210.

Frequency of Response: 1.

Average Burden Per Response: 15 minutes.

Estimated Annual Burden: 894,553.

2. Cessation or Continuance of Disability or Blindness Determination and Transmittal—Title XVI—0960–0443. The information collected on form SSA–832 is used by the SDDS to document for SSA whether an individual's disability benefits should be terminated or continued based on the recipient's impairment. SSA also uses this form for program management and evaluation. The respondents are SDDS employees adjudicating Title XVI disability claims.

Number of Respondents: 656,567.

Frequency of Response: 1.

Average Burden Per Response: 30 minutes.

Estimated Annual Burden: 328,284.

3. Cessation or Continuance of Disability or Blindness Determination and Transmittal—Title II—0960–0442. The information collected on form SSA–833 is used by the SDDS to prepare for SSA determinations of whether individuals receiving Title II disability or blindness benefits continue to be unable to engage in substantial gainful work due to their impairments and are still eligible for benefit payments. SSA also uses this form for program management and evaluation. The respondents are SDDS employees.

Number of Respondents: 627,973.

Frequency of Response: 1.

Average Burden Per Response: 30 minutes.

Estimated Annual Burden: 313,987.

Written comments and recommendations regarding the information collection(s) should be directed within 30 days to the OMB Desk Officer and SSA Reports Clearance Officer at the following addresses: (OMB) Office of Management and Budget, OIRA, Attn: Laura Oliven, New Executive Office Building, Room 10230, 725 17th St., NW, Washington, D.C. 20503 and (SSA) Social Security Administration, DCFAM, Attn: Frederick W. Brickenkamp 1–A–21 Operations Bldg. 6401 Security Blvd. Baltimore, MD 21235.

To receive a copy of any of the forms or clearance packages, call the SSA Reports Clearance Officer on (410) 965–4145 or write to him at the address listed above.

Dated: Ausgust 27, 1998.

Frederick W. Brickenkamp,

Reports Clearance Officer, Social Security Administration.

[FR Doc. 98–23679 Filed 9–2–98; 8:45 am]

BILLING CODE 4190–29–P

DEPARTMENT OF TRANSPORTATION

Office of the Secretary

Report, Forms and Recordkeeping Requirements; Agency Information Collection Activity Under OMB Review

AGENCY: Office of the Secretary, DOT.

ACTION: Notice.

SUMMARY: In accordance with the Paperwork Reduction Act of 1995 (44 U.S.C. Chapter 3501, et seq.) this notice announces that the Department of Transportation has submitted an information collection request (ICR) to the Office of Management and Budget (OMB) for review and clearance under the Paperwork Reduction Act of 1995 (Pub. L. 104–113, 44 U.S.C. Chapter 35). The ICR abstracted below describes the nature of the information collection and its burden.

DATES: Comments on this notice must be received on or before October 5, 1998.

FOR FURTHER INFORMATION CONTACT: Copies of the DOT information collection requests submitted to OMB may be obtained from Ms. Judith Street, Federal Aviation Administration, Corporate Information Division, ABC–100, 800 Independence Ave., SW., (202) 267–9895, Washington, DC 20591.

SUPPLEMENTARY INFORMATION:

Federal Aviation Administration (FAA)

Title: Eastern Region Airports Division.

OMB Control Number: 2120-New.

Affected Public: State, local governments.

Form(s): N/A.

Abstract: The Federal Aviation Administration (FAA) has initiated customer surveys throughout the agency in accordance with Executive Order No. 12862. The survey is needed to identify overall customer satisfaction with the conduct of business by the FAA Eastern Region Airports Division. The information will be used by management in the Eastern Region Airports Division to assess what is important to the customer, how well FAA is doing business and identify areas where changes in procedures may be desirable.

Estimated Annual Burden Hours: 220 hours.

Send comments to the Office of Information and Regulatory Affairs, Office of Management and Budget, 725–17th Street, NW, Washington, DC 20503, Attention FAA Desk Officer.

Comments are invited on: whether the proposed collection of information is necessary for the proper performance of the functions of the Department, including whether the information will have practical utility; the accuracy of the Department's estimate of the burden of the proposed information collection; ways to enhance the quality, utility and clarity of the information to be collected; and ways to minimize the burden of the collection of information on respondents, including the use of automated collection techniques or other forms of information technology. A comment to OMB is best assured of having its full effect if OMB receives it within 30 days of publication.

Issued in Washington, DC, on August 26, 1998.

Phillip A. Leach,

Clearance Officer, United States Department of Transportation.

[FR Doc. 98–23772 Filed 9–2–98; 8:45 am]

BILLING CODE 4910–15–M

DEPARTMENT OF TRANSPORTATION

Office of the Secretary

Aviation Proceedings, Agreements Filed During the Week Ending August 21, 1998

The following Agreements were filed with the Department of Transportation under the provisions of 49 U.S.C. Sections 412 and 414. Answers may be filed within 21 days of date of filing.

Docket Number: OST–98–4337
Date Filed: August 18, 1998
Parties: Members of the International Air Transport Association
Subject:
COMP Cargo Mail Vote 951
Cargo Currency Conversion Reso 033k (Euro)
Intended effective date: September 1, 1998.

Docket Number: OST–98–4338
Date Filed: August 18, 1998
Parties: Members of the International Air Transport Association
Subject:
PSC/Reso/092 dated August 4, 1998
Expedited Resolution 724
PSC/Minutes/003 dated August 4, 1998
Intended effective date: October 17, 1998.

Docket Number: OST–98–4339
Date Filed: August 18, 1998
Parties: Members of the International Air Transport Association
Subject:
PTC Comp 0324 dated August 18, 1998
Composite Expedited Resolutions
Intended effective date: October 1, 1998
r–1—001o, r–2—002h, r–3—003, r–4—010h, r–5—014a, r–6—017h, r–7—017hh, r–8—024d, r–9—024j, r–10—092, r–11—152d, r–12—311w

Docket Number: OST–98–4347
Date Filed: August 20, 1998
Parties: Members of the International Air Transport Association
Subject:
COMP Telex 024f—Zimbabwe Local Currency Fare Changes
Intended effective date: October 1, 1998.

Dorothy W. Walker,

Federal Register Liaison.

[FR Doc. 98–23774 Filed 9–2–98; 8:45 am]

BILLING CODE 4910–62–P

DEPARTMENT OF TRANSPORTATION

Office of the Secretary

Notice of Applications for Certificates of Public Convenience and Necessity and Foreign Air Carrier Permits Filed Under Subpart Q During the Week Ending August 21, 1998

The following Applications for Certificates of Public Convenience and Necessity and Foreign Air Carrier Permits were filed under Subpart Q of the Department of Transportation's Procedural Regulations (See 14 CFR 302.1701 et. seq.). The due date for Answers, Conforming Applications, or Motions to Modify Scope are set forth below for each application. Following the Answer period DOT may process the application by expedited procedures. Such procedures may consist of the adoption of a show-cause order, a tentative order, or in appropriate cases a final order without further proceedings.

Docket Number: OST–98–4348.
Date Filed: August 20, 1998.
Due Date for Answers, Conforming Applications, or Motions to Modify Scope: September 17, 1998.

Description: Application of Atlas Air, Inc. pursuant to 49 U.S.C. Section 41102 and Subpart Q, requests issuance of a certificate of public convenience and necessity authorizing scheduled foreign air transportation of property and mail between any point in the United States, on the one hand, and any point in the countries listed in Exhibit 1 to this application, on the other. Atlas requests authority to integrate this certificate authority and to commingle traffic on services conducted pursuant to such authority, consistent with applicable agreements between the U.S. and foreign countries.

Docket Number: OST–98–4351.
Date Filed: August 21, 1998.
Due Date for Answers, Conforming Applications, or Motions to Modify Scope: September 18, 1998.

Description: Application of Alas del Pacifico, S.A.C. pursuant to 49 U.S.C. Section 41305 and Subpart Q, applies for a foreign air carrier permit to engage in scheduled foreign air transportation of property and mail between Lima, Peru and Miami, Florida nonstop and via intermediate points, and in on and off route charters services as may be authorized pursuant to Part 212 of the Department's Regulations.

Dorothy W. Walker,

Federal Register Liaison.

[FR Doc. 98–23773 Filed 9–2–98; 8:45 am]

BILLING CODE 4910–62–P

DEPARTMENT OF TRANSPORTATION

Federal Highway Administration

Environmental Impact Statement: Park County, Wyoming

AGENCY: Federal Highway Administration (FHWA), DOT.

ACTION: Notice of intent.

SUMMARY: The FHWA is issuing this notice to advise the public that an environmental impact statement will be prepared for a proposed highway project in Park County, Wyoming.

FOR FURTHER INFORMATION CONTACT: Richard Cushing, Environmental Planning Engineer, Federal Highway Administration, 555 Zang Street, Lakewood, Colorado, 80228, telephone 303–716–2138.

SUPPLEMENTARY INFORMATION: The FHWA, in cooperation with Shoshone National Forest, the National Park Service, and the Wyoming Department of Transportation, will prepare an environmental impact statement (EIS) for a proposed improvement of U.S. Highway 212, Beartooth Highway. U.S. Highway 212 begins at the northeast corner to Yellowstone National Park, Park County, Montana, and proceeds northeasterly for 68.7 miles to the town of Red Lodge, Montana, in Carbon County. The section proposed for improvement begins 7.1 miles east of the junction of WY 296 (Chief Joseph Highway) and proceeds in a northeasterly direction for 18.6 miles ending at the Wyoming/Montana state line.

Alternatives under consideration include (1) the ''no build,'' (2) reconstruction of the roadway to applicable standards, and (3) other alternatives that will be developed during the scoping process.

Letters describing the proposed action and soliciting comments will be sent to appropriate Federal, State, and local agencies, and to private organizations and citizens who have previously expressed interest in this proposal. Interagency scoping meetings and public scoping meetings will be held in the project area. Public hearings will also be held. Information on the time and place of public scoping meetings and public hearings will be provided in the local news media. The draft EIS will be available for public and agency review and comment at the time of the hearing.

To ensure that the full range of issues related to the proposed action are addressed and all significant issues identified, comments and suggestions are invited from all interested parties. Comments and questions concerning the proposed action should be directed to the FHWA at the address provided above. (Catalog of Federal Domestic Assistance Program Number, Highway Research Planning and Construction. The regulations implementing Executive Order 12372 regarding intergovernmental consultation on Federal programs and activities apply to this program.)

Issued on: August 19, 1998.

Larry C. Smith,

Division Engineer, FHWA, Denver, CO.

[FR Doc. 98–23805 Filed 9–2–98; 8:45 am]

BILLING CODE 4910–22–M

DEPARTMENT OF TRANSPORTATION

Surface Transportation Board

[STB Finance Docket No. 33643]

Union Pacific Railroad Company—Trackage Rights Exemption—Wisconsin Central, Ltd.

Wisconsin Central, Ltd. (WC) has agreed to grant overhead trackage rights to Union Pacific Railroad Company (UP) between milepost 308.5 near Owen, WI, extending to milepost 352.2 at Chippewa Falls, WI, extending to milepost 432.1 Withrow, MN, a distance of 123.6 miles.

The transaction was scheduled to be consummated on August 25, 1998.

The purpose of the trackage rights is to permit UP to use WC's trackage in an efficient and economical routing of through traffic.

As a condition to this exemption, any employees affected by the trackage rights will be protected by the conditions imposed in *Norfolk and Western Ry. Co.—Trackage Rights—BN*, 354 I.C.C. 605 (1978), as modified in *Mendocino Coast Ry., Inc.—Lease and Operate*, 360 I.C.C. 653 (1980).

This notice is filed under 49 CFR 1180.2(d)(7). If the notice contains false or misleading information, the exemption is void *ab initio*. Petitions to revoke the exemption under 49 U.S.C. 10502(d) may be filed at any time. The filing of a petition to revoke will not automatically stay the transaction.

An original and 10 copies of all pleadings, referring to STB Finance Docket No. 33643, must be filed with the Surface Transportation Board, Office of the Secretary, Case Control Unit, 1925 K Street, N.W., Washington, DC 20423–0001. In addition, a copy of each pleading must be served on Joseph D. Anthofer, General Attorney, 1416 Dodge Street, #830, Omaha, NE 68179.

Board decisions and notices are available on our website at ''WWW.STB.DOT.GOV.''

Decided: August 27, 1998.

By the Board, David M. Konschnik, Director, Office of Proceedings.

Vernon A. Williams,

Secretary.

[FR Doc. 98–23673 Filed 9–2–98; 8:45 am]

BILLING CODE 4915–00–P

DEPARTMENT OF THE TREASURY

Submission to OMB for Review; Comment Request

August 26, 1998.

The Department of Treasury has submitted the following public information collection requirement(s) to OMB for review and clearance under the Paperwork Reduction Act of 1995, Public Law 104–13. Copies of the submission(s) may be obtained by calling the Treasury Bureau Clearance Officer listed. Comments regarding this information collection should be addressed to the OMB reviewer listed and to the Treasury Department Clearance Officer, Department of the Treasury, Room 2110, 1425 New York Avenue, NW., Washington, DC 20220.

Dates: Written comments should be received on or before October 5, 1998, to be assured of consideration.

Internal Revenue Service (IRS)

OMB Number: 1545–0715.

Form Number: IRS Form 1099–B.

Type of Review: Extension.

Title: Proceeds From Broker and Barter Exchange Transactions.

Description: Form 1099–B is used by brokers and barter exchanges to report proceeds from transactions to the Internal Revenue Service.

Respondents: Individuals or households.

Estimated Number of Respondents/Recordkeepers: 50,000.

Estimated Burden Hours Per Respondent/Recordkeeper: 15 minutes.

Frequency of Response: Annually.

Estimated Total Reporting/Recordkeeping Burden: 29,402,969 hours.

OMB Number: 1545–0930.

Form Number: IRS Form 8396.

Type of Review: Extension.

Title: Mortgage Interest Credit.

Description: Form 8396 is used by individual taxpayers to claim a credit against their tax for a portion of the interest paid on a home mortgage in connection with a qualified mortgage credit certificate. Internal Revenue Code (IRC) section 163(g) provides that the interest deduction on Schedule A will be reduced by the credit.

Respondents: Individuals or households.

Estimated Number of Respondents/Recordkeepers: 10,000.

Estimated Burden Hours Per Respondent/Recordkeeper:

Recordkeeping—46 min.
Learning about the law or the form—7 min.
Preparing the form—42 min.
Copying, assembling, and sending the form to the IRS—20 min.

Frequency of Response: Annually.

Estimated Total Reporting/Recordkeeping Burden: 54,600 hours.

OMB Number: 1545–1112.

Regulation Project Number: IA–96–88 Final.

Type of Review: Extension.

Title: Certain Elections Under the Technical and Miscellaneous Revenue Act of 1998 and the Redesignation of Certain Other Temporary Elections Regulations.

Description: These regulations establish various elections with respect to which immediate interim guidance on the time and manner or making the elections is necessary. These regulations enable taxpayers to take advantage of the benefits of various Code provisions.

Respondents: Individuals or households, Business or other for-profit, Not-for-profit institutions, Farms, State, Local or Tribal Government.

Estimated Number of Respondents: 24,305.

Estimated Burden Hours Per Respondent: 17 minutes.

Frequency of Response: On occasion.

Estimated Total Reporting Burden: 6,712 hours.

OMB Number: 1545–1304.

Regulation Project Number: INTL–941–86, INTL–656–87 and INTL–704–87 NPRM.

Type of Review: Extension.

Title: Treatment of Shareholders of Certain Passive Foreign Investment Companies.

Description: The reporting requirements affect U.S. persons that are direct and indirect shareholders of passive foreign investment companies (PFICs). The IRS uses Form 8621 to identify PFICs, U.S. persons that are shareholders, and transactions subject to PCIF taxation and verify income inclusions, excess distributions and deferred tax amounts.

Respondents: Business or other for-profit, Individuals or households.

Estimated Number of Respondents: 2,500.

Estimated Burden Hours Per Respondent: 1 hour.

Frequency of Response: Annually.

Estimated Total Reporting Burden: 2,500 hours.

Clearance Officer: Garrick Shear (202) 622–3869, Internal Revenue Service, Room 5571, 1111 Constitution Avenue, NW, Washington, DC 20224.

OMB Reviewer: Alexander T. Hunt (202) 395–7860, Office of Management and Budget, Room 10226, New Executive Office Building, Washington, DC 20503.

Lois K. Holland,

Departmental Reports Management Officer.

[FR Doc. 98–23714 Filed 9–2–98; 8:45 am]

BILLING CODE 4830–01–U

DEPARTMENT OF THE TREASURY

Submission to OMB for Review; Comment Request

August 27, 1998.

The Department of Treasury has submitted the following public information collection requirement(s) to OMB for review and clearance under the Paperwork Reduction Act of 1995, Public Law 104–13. Copies of the submission(s) may be obtained by calling the Treasury Bureau Clearance Officer listed. Comments regarding this information collection should be addressed to the OMB reviewer listed and to the Treasury Department Clearance Officer, Department of the Treasury, Room 2110, 1425 New York Avenue, NW., Washington, DC 20220.

Dates: Written comments should be received on or before October 5, 1998 to be assured of consideration.

Internal Revenue Service (IRS)

OMB Number: 1545–1142.

Regulation Project Number: INTL–939–86 NPRM.

Type of Review: Extension.

Title: Insurance Income of a Controlled Foreign Corporation for Taxable Years Beginning after December 31, 1986.

Description: The information is required to determine the location of moveable property; allocate income and deductions to the proper category of insurance income, determine those amounts for computing taxable income that are derived from an insurance company annual statement, and permit a Controlled Foreign Corporation to elect to treat related person insurance income as income effectively connected with the conduct of a U.S. trade or business.

Respondents: Businesses or other for-profit institutions.

Estimated Number of Respondents/Recordkeepers: 500.

Estimated Burden Hours Per Respondent/Recordkeeper: 28 hr., 12 min.

Frequency of Response: Annually.

Estimated Total Reporting/Recordkeeping Burden: 14,100 hours.

OMB Number: 1545–1575.

Regulation Project Number: REG–116608–97 NPRM and Temporary.

Type of Review: Extension.

Title: EIC Eligibility Requirements.

Description: Information is required to assist the IRS in determining whether the taxpayer is entitled to the earned income credit.

Respondents: Individuals or households.

Estimated Number of Respondents: 1.

Estimated Burden Hours Per Respondent: 1 hour.

Frequency of Response: Other.

Estimated Total Reporting Burden: 1 hour.

Clearance Officer: Garrick Shear (202) 622–3869, Internal Revenue Service, Room 5571, 1111 Constitution Avenue, NW, Washington, DC 20224.

OMB Reviewer: Alexander T. Hunt (202) 395–7860, Office of Management and Budget, Room 10226, New Executive Office Building, Washington, DC 20503.

Lois K. Holland,

Departmental Reports, Management Officer.

[FR Doc. 98–23715 Filed 9–2–98; 8:45 am]

BILLING CODE 4830–01–P

DEPARTMENT OF THE TREASURY

Fiscal Service

Financial Management Service; Proposed Collection of Information: Application for Payment of a Deceased Depositor's Postal Savings Account (POD 1681)

AGENCY: Financial Management Service, Fiscal Service, Treasury.

ACTION: Notice and request for comments.

SUMMARY: The Financial Management Service, as part of its continuing effort to reduce paperwork and respondent burden, invites the general public and other Federal agencies to take this opportunity to comment on a continuing information collection. By this notice, the Financial Management Service solicits comments concerning the form ''Application for Payment of a Deceased Depositor's Postal Savings Account.''

DATES: Written comments should be received on or before November 2, 1998.

ADDRESSES: Direct all written comments to Financial Management Service, 3361–L 75th Avenue, Landover, Maryland 20785.

FOR FURTHER INFORMATION CONTACT: Requests for additional information or copies of the form(s) and instructions should be directed to Mary Morris, Credit Accounting Branch, 3700 East-West Highway, Hyattsville, MD 20782, (202) 874–7801.

SUPPLEMENTARY INFORMATION: Pursuant to the Paperwork Reduction Act of 1995, (44 U.S.C. 3506(c)(2)(A)), the Financial Management Service solicits comments on the collection of information described below.

Title: Application for Payment of a Deceased Depositor's Postal Savings Account.

OMB Number: 1510–0027.

Form Number: POD 1681.

Abstract: The form is used when an application is submitted for payment of a deceased Postal Savings depositor's account. Information furnished on the form is used to determine if the applicant is entitled to the proceeds of the account.

Current Actions: Extension of currently approved collection.

Type of Review: Regular.

Affected Public: Individuals or households.

Estimated Number of Respondents: 150.

Estimated Time Per Respondent: 15 minutes.

Estimated Total Annual Burden Hours: 38.

Comments: Comments submitted in response to this notice will be summarized and/or included in the request for Office of Management and Budget approval. All comments will become a matter of public record. Comments are invited on: (a) whether the collection of information is necessary for the proper performance of the functions of the agency, including whether the information shall have practical utility; (b) the accuracy of the agency's estimate of the burden of the collection of information; (c) ways to enhance the quality, utility, and clarity of the information to be collected; (d) ways to minimize the burden of the collection of information on respondents, including through the use of automated collection techniques or other forms of information technology; and (e) estimates of capital or start-up costs and costs of operation, maintenance and purchase of services to provide information.

Dated: August 27, 1998.

Diane E. Clark,

Assistant Commissioner for Management and Chief Financial Officer.

[FR Doc. 98–23683 Filed 9–2–98; 8:45 am]

BILLING CODE 4810–35–M

DEPARTMENT OF THE TREASURY

Fiscal Service

Financial Management Service; Proposed Collection of Information: CMIA Report and Direct Cost Claim

AGENCY: Financial Management Service, Fiscal Service, Treasury.

ACTION: Notice and request for comments.

SUMMARY: The Financial Management Service, as part of its continuing effort to reduce paperwork and respondent burden, invites the general public and other Federal agencies to take this opportunity to comment on a continuing information collection. By this notice, the Financial Management Service solicits comments concerning the report ''CMIA Report and Direct Cost Claim.''

DATES: Written comments should be received on or before November 2, 1998.

ADDRESSES: Direct all written comments to Financial Management Service, 3361–L 75th Avenue, Landover, Maryland 20785.

FOR FURTHER INFORMATION CONTACT: Requests for additional information or copies of the form(s) and instructions should be directed to Birdie McKay, Program Compliance Evaluation Division, 401—14th Street, S.W., Washington, D.C. 20227, (202) 874–6925.

SUPPLEMENTARY INFORMATION: Pursuant to the Paperwork Reduction Act of 1995, (44 U.S.C. 3506(c)(2)(A)), the Financial Management Service solicits comments on the collection of information described below.

Title: CMIA Report and Direct Cost Claim.

OMB Number: 1510–0061.

Form Number: None.

Abstract: The report is used to gather information from States and territories on interest owed to and collected by Federal Government for major Federal assistance programs.

Current Actions: Extension of currently approved collection.

Type of Review: Regular.

Affected Public: State, Local or Tribal Government.

Estimated Number of Respondents: 56.

Estimated Time Per Respondent: 500 hours.

Estimated Total Annual Burden Hours: 28,000.

Comments: Comments submitted in response to this notice will be summarized and/or included in the request for Office of Management and Budget approval. All comments will become a matter of public record. Comments are invited on: (a) Whether the collection of information is necessary for the propose performance of the functions of the agency, including whether the information shall have practical utility; (b) the accuracy of the agency's estimate of the burden of the collection of information; (c) ways to enhance the quality, utility, and clarity of the information to be collected; (d) ways to minimize the burden of the collection of information on respondents, including through the use of automated collection techniques or other forms of information technology; and (e) estimates of capital or start-up costs and costs of operation, maintenance and purchase of services to provide information.

Dated: August 27, 1998.

Diane E. Clark,

Assistant Commissioner for Management and Chief Financial Officer.

[FR Doc. 98–23684 Filed 9–1–98; 8:45 am]

BILLING CODE 4810–35–M

DEPARTMENT OF THE TREASURY

Fiscal Service

Financial Management Service; Proposed Collection of Information: Assignment Form

AGENCY: Financial Management Service, Fiscal Service, Treasury.

ACTION: Notice and request for comments.

SUMMARY: The Financial Management Service, as part of its continuing effort to reduce paperwork and respondent burden, invites the general public and other Federal agencies to take this opportunity to comment on a continuing information collection. By this notice, the Financial Management Service solicits comments concerning the form ''Assignment Form.''

DATES: Written comments should be received on or before November 2, 1998.

ADDRESSES: Direct all written comments to Financial Management Service, 3361–L 75th Avenue, Landover, Maryland 20785.

FOR FURTHER INFORMATION CONTACT: Requests for additional information or copies of the form(s) and instructions should be directed to Mary Morris, Credit Accounting Branch, 3700 East-West Highway, Hyattsville, MD. 20782, (202) 874–7801.

SUPPLEMENTARY INFORMATION: Pursuant to the Paperwork Reduction Act of 1995, (44 U.S.C. 3506(c)(2)(A)), the Financial Management Service solicits comments on the collection of information described below.

Title: Assignment Form.

OMB Number: 1510–0035.

Form Number: None.

Abstract: The form is used when an awardholder wants to assign or transfer all or part of his/her award to another person. When this occurs the awardholder forfeits all future rights to the portion assigned.

Current Actions: Extension of currently approved collection.

Type of Review: Regular.

Affected Public: Individuals or households.

Estimated Number of Respondents: 150.

Estimated Time Per Respondent: 30 minutes.

Estimated Total Annual Burden Hours: 75.

Comments: Comments submitted in response to this notice will be summarized and/or included in the request for Office of Management and Budget approval. All comments will become a matter of public record. Comments are invited on: (a) Whether the collection of information is necessary for the proper performance of the functions of the agency, including whether the information shall have practical utility; (b) the accuracy of the agency's estimate of the burden of the collection of information; (c) ways to enhance the quality, utility, and clarity of the information to be collected; (d) ways to minimize the burden of the collection of information on respondents, including through the use of automated collection techniques or other forms of information technology; and (e) estimates of capital or start-up costs and costs of operation, maintenance and purchase of services to provide information.

Dated: August 27, 1998.

Diane E. Clark,

Assistant Commissioner for Management and Chief Financial Officer.

[FR Doc. 98–23685 Filed 9–2–98; 8:45 am]

BILLING CODE 4810–35–M

DEPARTMENT OF VETERANS AFFAIRS

[OMB Control No. 2900–0128]

Proposed Information Collection Activity: Proposed Collection; Comment Request

AGENCY: Veterans Benefits Administration, Department of Veterans Affairs.

ACTION: Notice.

SUMMARY: The Veterans Benefits Administration (VBA), Department of Veterans Affairs (VA), is announcing an opportunity for public comment on the proposed collection of certain information by the agency. Under the Paperwork Reduction Act (PRA) of 1995, Federal agencies are required to publish notice in the **Federal Register** concerning each proposed collection of information, including each proposed extension of a currently approved collection, and allow 60 days for public comment in response to the notice. This notice solicits comments on the information needed to determine eligibility to reinstate a veteran's Government Life Insurance policy.

DATES: Written comments and recommendations on the proposed collection of information should be received on or before November 2, 1998.

ADDRESSES: Submit written comments on the collection of information to Nancy J. Kessinger, Veterans Benefits Administration (20S52), Department of Veterans Affairs, 810 Vermont Avenue, NW, Washington, DC 20420. Please refer to ''OMB Control No. 2900–0128'' in any correspondence.

FOR FURTHER INFORMATION CONTACT: Nancy J. Kessinger at (202) 273–7079 or FAX (202) 275–5947.

SUPPLEMENTARY INFORMATION: Under the PRA of 1995 (Public Law 104–13; 44 U.S.C., 3501–3520), Federal agencies must obtain approval from the Office of Management and Budget (OMB) for each collection of information they conduct or sponsor. This request for comment is being made pursuant to Section 3506(c)(2)(A) of the PRA.

With respect to the following collection of information, VBA invites comments on: (1) whether the proposed collection of information is necessary for the proper performance of VBA's functions, including whether the information will have practical utility; (2) the accuracy of VBA's estimate of the burden of the proposed collection of information; (3) ways to enhance the quality, utility, and clarity of the information to be collected; and (4) ways to minimize the burden of the collection of information on respondents, including through the use of automated collection techniques or the use of other forms of information technology.

Title and Form Numbers: Notice of Lapse, VA Form 29–389, and Notice of Past Due Payment, VA Form 29–389–1.

OMB Control Number: 2900–0128.

Type of Review: Extension of a currently approved collection.

Abstract: The forms are used by veterans to reinstate a lapsed Government Life Insurance policy. The information collected is used by VA to determine the insured's eligibility to reinstate.

Affected Public: Individuals or households.

Estimated Annual Burden:

a. VA Form 29–389—3,399 hours.
b. VA Form 29–389–1—1,060 hours.

Estimated Average Burden Per Respondent:

a. VA Form 29–389—12 minutes.
b. VA Form 29–389–1—10 minutes.

Frequency of Response: On occasion.

Estimated Number of Respondents:

a. VA Form 29–389—16,993.
b. VA Form 29–389–1—6,359.

Dated: August 18, 1998.

By direction of the Secretary.

Donald L. Neilson,

Director, Information Management Service.

[FR Doc. 98–23727 Filed 9–2–98; 8:45 am]

BILLING CODE 4830–01–U

DEPARTMENT OF VETERANS AFFAIRS

[OMB Control No. 2900–0149]

Proposed Information Collection Activity: Proposed Collection; Comment Request

AGENCY: Veterans Benefits Administration, Department of Veterans Affairs.

ACTION: Notice.

SUMMARY: The Veterans Benefits Administration (VBA), Department of Veterans Affairs (VA), is announcing an opportunity for public comment on the proposed collection of certain information by the agency. Under the Paperwork Reduction Act (PRA) of 1995, Federal agencies are required to publish notice in the **Federal Register** concerning each proposed collection of information, including each proposed extension of a currently approved collection, and allow 60 days for public comment in response to the notice. This notice solicits comments for information needed to convert to a permanent plan of insurance.

DATES: Written comments and recommendations on the proposed collection of information should be received on or before November 2, 1998.

ADDRESSES: Submit written comments on the collection of information to Nancy J. Kessinger, Veterans Benefits Administration (20S52), Department of Veterans Affairs, 810 Vermont Avenue, NW, Washington, DC 20420. Please refer to ''OMB Control No. 2900–0149'' in any correspondence.

FOR FURTHER INFORMATION CONTACT: Nancy J. Kessinger at (202) 273–7079 or FAX (202) 275–5947.

SUPPLEMENTARY INFORMATION: Under the PRA of 1995 (Pub. L. 104–13; 44 U.S.C., 3501–3520), Federal agencies must obtain approval from the Office of Management and Budget (OMB) for each collection of information they conduct or sponsor. This request for comment is being made pursuant to Section 3506(c)(2)(A) of the PRA.

With respect to the following collection of information, VBA invites comments on: (1) whether the proposed

collection of information is necessary for the proper performance of VBA's functions, including whether the information will have practical utility; (2) the accuracy of VBA's estimate of the burden of the proposed collection of information; (3) ways to enhance the quality, utility, and clarity of the information to be collected; and (4) ways to minimize the burden of the collection of information on respondents, including through the use of automated collection techniques or the use of other forms of information technology.

Title and Form Numbers: Application for Conversion, VA Form 29–0152.

OMB Control Number: 2900–0149.

Type of Review: Extension of a currently approved collection.

Abstract: The form is used by the insured to convert to a permanent plan of insurance. The information collected is used by VA to initiate the processing of the insured's request to convert his/her insurance.

Affected Public: Individuals or households.

Estimated Annual Burden: 1,125 hours.

Estimated Average Burden Per Respondent: 15 minutes.

Frequency of Response: On occasion.

Estimated Number of Respondents: 4,500.

Dated: August 18, 1998.

By direction of the Secretary.

Donald L. Neilson,

Director, Information Management Service.

[FR Doc. 98–23728 Filed 9–2–98; 8:45 am]

BILLING CODE 8320–01–P

DEPARTMENT OF VETERANS AFFAIRS

[OMB Control No. 2900–0011]

Agency Information Collection Activities Under OMB Review

AGENCY: Veterans Benefits Administration, Department of Veterans Affairs

ACTION: Notice.

SUMMARY: In compliance with the Paperwork Reduction Act (PRA) of 1995 (44 U.S.C., 3501 et seq.), this notice announces that the Veterans Benefits Administration (VBA), Department of Veterans Affairs, has submitted the collection of information abstracted below to the Office of Management and Budget (OMB) for review and comment. The PRA submission describes the nature of the information collection and its expected cost and burden; it includes the actual data collection instrument.

DATES: Comments must be submitted on or before October 5, 1998.

FOR FURTHER INFORMATION OR A COPY OF THE SUBMISSION CONTACT: Ron Taylor, Information Management Service (045A4), Department of Veterans Affairs, 810 Vermont Avenue, NW, Washington, DC 20420, (202) 273–8015 or FAX (202) 273–5981. Please refer to ''OMB Control No. 2900–0011.''

SUPPLEMENTARY INFORMATION:

Title: Application for Reinstatement, VA Form 29–352.

OMB Control Number: 2900–0011.

Type of Review: Reinstatement, without change, of a previously approved collection for which approval has expired.

Abstract: The form is used to apply for reinstatement of insurance and/or Total Disability Income Provision that has lapsed for more than six months. The information is used to establish eligibility of the applicant for the purpose of reinstatement.

An agency may not conduct or sponsor, and a person is not required to respond to a collection of information unless it displays a currently valid OMB control number. The **Federal Register** Notice with a 60-day comment period soliciting comments on this collection of information was published on April 9, 1998 at page 17486.

Affected Public: Individuals or households.

Estimated Annual Burden: 500 hours.

Estimated Average Burden Per Respondent: 20 minutes.

Frequency of Response: Generally one time.

Estimated Number of Respondents: 1,500.

Send comments and recommendations concerning any aspect of the information collection to VA's OMB Desk Officer, Allison Eydt, OMB Human Resources and Housing Branch, New Executive Office Building, Room 10235, Washington, DC 20503 (202) 395–4650. Please refer to ''OMB Control No. 2900–0011'' in any correspondence.

Dated: August 18, 1998.

By direction of the Secretary:

Donald L. Neilson,

Director Information Management Service.

[FR Doc. 98–23716 Filed 9–2–98; 8:45 am]

BILLING CODE 8320–01–P

DEPARTMENT OF VETERANS AFFAIRS

[OMB Control No. 2900–0020]

Agency Information Collection Activities Under OMB Review

AGENCY: Veterans Benefits Administration, Department of Veterans Affairs.

ACTION: Notice.

SUMMARY: In compliance with the Paperwork Reduction Act (PRA) of 1995 (44 U.S.C., 3501 et seq.), this notice announces that the Veterans Benefits Administration (VBA), Department of Veterans Affairs, has submitted the collection of information abstracted below to the Office of Management and Budget (OMB) for review and comment. The PRA submission describes the nature of the information collection and its expected cost and burden; it includes the actual data collection instrument.

DATE: Comments must be submitted on or before October 5, 1998.

FOR FURTHER INFORMATION OR A COPY OF THE SUBMISSION CONTACT: Ron Taylor, Information Management Service (045A4), Department of Veterans Affairs, 810 Vermont Avenue, NW, Washington, DC 20420, (202) 273–8015 or FAX (202) 273–5981. Please refer to ''OMB Control No. 2900–0020.''

SUPPLEMENTARY INFORMATION:

Title: Designation of Beneficiary, VA Form 29–336.

OMB Control Number: 2900–0020.

Type of Review: Extension of a currently approved collection.

Abstract: The form is used by the insured to designate a beneficiary and select an optional settlement to be used when the insurance matures by death. The information is used by VA to determine who is eligible to receive the proceeds of the insurance.

An agency may not conduct or sponsor, and a person is not required to respond to a collection of information unless it displays a currently valid OMB control number. The **Federal Register** Notice with a 60-day comment period soliciting comments on this collection of information was published on March 24, 1998 at page 14177.

Affected Public: Individuals or households.

Estimated Annual Burden: 13,917 hours.

Estimated Average Burden Per Respondent: 10 minutes.

Frequency of Response: On occasion.

Estimated Number of Respondents: 83,500.

Send comments and recommendations concerning any

aspect of the information collection to VA's OMB Desk Officer, Allison Eydt, OMB Human Resources and Housing Branch, New Executive Office Building, Room 10235, Washington, DC 20503 (202) 395–4650. Please refer to ''OMB Control No. 2900–0020'' in any correspondence.

Dated: August 14, 1998.

By direction of the Secretary:

Donald L. Neilson,

Director, Information Management Service.

[FR Doc. 98–23717 Filed 9–2–98; 8:45 am]

BILLING CODE 8320–01–P

DEPARTMENT OF VETERANS AFFAIRS

[OMB Control No. 2900–0041]

Agency Information Collection Activities Under OMB Review

AGENCY: Veterans Benefits Administration, Department of Veterans Affairs.

ACTION: Notice.

SUMMARY: In compliance with the Paperwork Reduction Act (PRA) of 1995 (44 U.S.C., 3501 *et seq.*), this notice announces that the Veterans Benefits Administration (VBA), Department of Veterans Affairs, has submitted the collection of information abstracted below to the Office of Management and Budget (OMB) for review and comment. The PRA submission describes the nature of the information collection and its expected cost and burden; it includes the actual data collection instrument.

DATE: Comments must be submitted on or before October 5, 1998.

FOR FURTHER INFORMATION OR A COPY OF THE SUBMISSION CONTACT: Ron Taylor, Information Management Service (045A4), Department of Veterans Affairs, 810 Vermont Avenue, NW, Washington, DC 20420, (202) 273–8015 or FAX (202) 273–5981. Please refer to ''OMB Control No. 2900–0041.''

SUPPLEMENTARY INFORMATION:

Title: Compliance Inspection Report, VA Form 26–1839.

OMB Control Number: 2900–0041.

Type of Review: Reinstatement, without change, of a previously approved collection for which approval has expired.

Abstract: The form is used by fee compliance inspectors to report acceptability of residential construction and conformity with standards prescribed for new housing proposed as security for loans guaranteed. The information is used by VA to determine whether completion of all onsite and offsite improvements are completed in accordance with plans and specifications used in the appraisal of the property.

An agency may not conduct or sponsor, and a person is not required to respond to a collection of information unless it displays a currently valid OMB control number. The **Federal Register** Notice with a 60-day comment period soliciting comments on this collection of information was published on March 24, 1998 at page 14179.

Affected Public: Individuals or households.

Estimated Annual Burden: 1 hour is being requested since the compliance inspection report is common to the industry.

Estimated Average Burden Per Respondent: 15 minutes.

Frequency of Response: Generally one time.

Estimated Number of Respondents: 225,000.

Send comments and recommendations concerning any aspect of the information collection to VA's OMB Desk Officer, Allison Eydt, OMB Human Resources and Housing Branch, New Executive Office Building, Room 10235, Washington, DC 20503 (202) 395–4650. Please refer to ''OMB Control No. 2900–0041'' in any correspondence.

Dated: August 18, 1998.

By direction of the Secretary.

Donald L. Neilson,

Director, Information Management Service.

[FR Doc. 98–23718 Filed 9–2–98; 8:45 am]

BILLING CODE 8320–01–P

DEPARTMENT OF VETERANS AFFAIRS

[OMB Control No. 2900–0046]

Agency Information Collection Activities Under OMB Review

AGENCY: Veterans Benefits Administration, Department of Veterans Affairs.

ACTION: Notice.

SUMMARY: In compliance with the Paperwork Reduction Act (PRA) of 1995 (44 U.S.C., 3501 et seq.), this notice announces that the Veterans Benefits Administration (VBA), Department of Veterans Affairs, has submitted the collection of information abstracted below to the Office of Management and Budget (OMB) for review and comment. The PRA submission describes the nature of the information collection and its expected cost and burden; it includes the actual data collection instrument.

DATES: Comments must be submitted on or before October 5, 1998.

FOR FURTHER INFORMATION OR A COPY OF THE SUBMISSION CONTACT: Ron Taylor, Information Management Service (045A4), Department of Veterans Affairs, 810 Vermont Avenue, NW, Washington, DC 20420, (202) 273–8015 or FAX (202) 273–5981. Please refer to ''OMB Control No. 2900–0046.''

SUPPLEMENTARY INFORMATION:

Title and Form Number: Statement of Heirs for Payment of Credits Due Estate of Deceased Veteran, VA Form Letter 29–596.

OMB Control Number: 2900–0046.

Type of Review: Extension of a currently approved collection.

Abstract: The form letter is used to obtain information for payment of credits due the estate of a deceased veteran. The information is used by VA to establish entitlement to the refundable credits.

An agency may not conduct or sponsor, and a person is not required to respond to a collection of information unless it displays a currently valid OMB control number. The **Federal Register** Notice with a 60-day comment period soliciting comments on this collection of information was published on January 29, 1998 at page 4528.

Affected Public: Individuals or households.

Estimated Annual Burden: 78 hours.

Estimated Average Burden Per Respondent: 15 minutes.

Frequency of Response: On occasion.

Estimated Number of Respondents: 312.

Send comments and recommendations concerning any aspect of the information collection to VA's OMB Desk Officer, Allison Eydt, OMB Human Resources and Housing Branch, New Executive Office Building, Room 10235, Washington, DC 20503 (202) 395–4650. Please refer to ''OMB Control No. 2900–0046'' in any correspondence.

Dated: August 24, 1998.

By direction of the Secretary:

Donald L. Neilson,

Director, Information Management Service.

[FR Doc. 98–23719 Filed 9–2–98; 8:45 am]

BILLING CODE 8320–01–P

DEPARTMENT OF VETERANS AFFAIRS

[OMB Control No. 2900–0065]

Agency Information Collection Activities Under OMB Review

AGENCY: Veterans Benefits Administration, Department of Veterans Affairs

ACTION: Notice.

SUMMARY: In compliance with the Paperwork Reduction Act (PRA) of 1995 (44 U.S.C., 3501 *et seq.*), this notice announces that the Veterans Benefits Administration (VBA), Department of Veterans Affairs, has submitted the collection of information abstracted below to the Office of Management and Budget (OMB) for review and comment. The PRA submission describes the nature of the information collection and its expected cost and burden; it includes the actual data collection instrument.

DATES: Comments must be submitted on or before October 5, 1998.

FOR FURTHER INFORMATION OR A COPY OF THE SUBMISSION CONTACT: Ron Taylor, Information Management Service (045A4), Department of Veterans Affairs, 810 Vermont Avenue, NW, Washington, DC 20420, (202) 273–8015 or FAX (202) 273–5981. Please refer to ''OMB Control No. 2900–0065.''

SUPPLEMENTARY INFORMATION:

Title: Request for Employment Information in Connection with Claim for Disability Benefits, VA Form 21–4192.

OMB Control Number: 2900–0065.

Type of Review: Extension of a currently approved collection.

Abstract: The form is used to gather the necessary information about employment of the veteran-applicant to determine the extent of disability affecting employment. The information will be used by VA to determine the veteran's maximum disability benefit entitlement.

An agency may not conduct or sponsor, and a person is not required to respond to a collection of information unless it displays a currently valid OMB control number. The **Federal Register** Notice with a 60-day comment period soliciting comments on this collection of information was published on April 9, 1998 at page 17486.

Affected Public: Business or other for-profit.

Estimated Annual Burden: 15,000 hours.

Estimated Average Burden Per Respondent: 15 minutes.

Frequency of Response: On occasion.

Estimated Number of Respondents: 60,000.

Send comments and recommendations concerning any aspect of the information collection to VA's OMB Desk Officer, Allison Eydt, OMB Human Resources and Housing Branch, New Executive Office Building, Room 10235, Washington, DC 20503 (202) 395–4650. Please refer to ''OMB Control No. 2900–0065'' in any correspondence.

Dated: August 18, 1998.

By direction of the Secretary.

Donald L. Neilson,

Director, Information Management Service.

[FR Doc. 98–23720 Filed 9–2–98; 8:45 am]

BILLING CODE 4830–01–U

DEPARTMENT OF VETERANS AFFAIRS

[OMB Control No. 2900–0143]

Agency Information Collection Activities Under OMB Review

AGENCY: Veterans Benefits Administration, Department of Veterans Affairs.

ACTION: Notice.

SUMMARY: In compliance with the Paperwork Reduction Act (PRA) of 1995 (44 U.S.C., 3501 et seq.), this notice announces that the Veterans Benefits Administration (VBA), Department of Veterans Affairs, has submitted the collection of information abstracted below to the Office of Management and Budget (OMB) for review and comment. The PRA submission describes the nature of the information collection and its expected cost and burden; it includes the actual data collection instrument.

DATES: Comments must be submitted on or before October 5, 1998.

FOR FURTHER INFORMATION OR A COPY OF THE SUBMISSION CONTACT: Ron Taylor, Information Management Service (045A4), Department of Veterans Affairs, 810 Vermont Avenue, NW, Washington, DC 20420, (202) 273–8015 or FAX (202) 273–5981. Please refer to ''OMB Control No. 2900–0143.''

SUPPLEMENTARY INFORMATION:

Title: Offer to Rent on Month-To-Month Basis and Credit Statement of Prospective Tenant, VA Form 26–6725.

OMB Control Number: 2900–0143.

Type of Review: Extension of a currently approved collection.

Abstract: The form is used to establish the landlord-tenant relationship when properties acquired by VA, through operation of the guaranteed and direct home loan programs, are rented. VA Form 26–6725 states the responsibilities of the parties, provides evidence of tender and acceptance of rental payments, and provides credit information for evaluating the prospective tenant's ability to meet rental payments. Without this form, VA would have to prepare individual leases.

An agency may not conduct or sponsor, and a person is not required to respond to a collection of information unless it displays a currently valid OMB control number. The **Federal Register** Notice with a 60-day comment period soliciting comments on this collection of information was published on March 24, 1998 at page 14176.

Affected Public: Individuals or households—Business or other for-profit.

Estimated Annual Burden: 33 hours.

Estimated Average Burden Per Respondent: 20 minutes.

Frequency of Response: Generally one time.

Estimated Number of Respondents: 100.

Send comments and recommendations concerning any aspect of the information collection to VA's OMB Desk Officer, Allison Eydt, OMB Human Resources and Housing Branch, New Executive Office Building, Room 10235, Washington, DC 20503 (202) 395–4650. Please refer to ''OMB Control No. 2900–0143'' in any correspondence.

Dated: August 18, 1998.

By direction of the Secretary.

Donald L. Neilson,

Director, Information Management Service.

[FR Doc. 98–23721 Filed 9–2–98; 8:45 am]

BILLING CODE 8320–01–P

DEPARTMENT OF VETERANS AFFAIRS

[OMB Control No. 2900–0153]

Agency Information Collection Activities Under OMB Review

AGENCY: Veterans Benefits Administration, Department of Veterans Affairs.

ACTION: Notice.

SUMMARY: In compliance with the Paperwork Reduction Act (PRA) of 1995 (44 U.S.C., 3501 et seq.), this notice announces that the Veterans Benefits Administration (VBA), Department of Veterans Affairs, has submitted the collection of information abstracted below to the Office of Management and Budget (OMB) for review and comment. The PRA submission describes the nature of the information collection and its expected cost and burden; it includes the actual data collection instrument.

DATES: Comments must be submitted on or before October 5, 1998.

FOR FURTHER INFORMATION OR A COPY OF THE SUBMISSION CONTACT: Ron Taylor, Information Management Service (045A4), Department of Veterans Affairs, 810 Vermont Avenue, NW, Washington, DC 20420, (202) 273–8015 or FAX (202) 273–5981. Please refer to ''OMB Control No. 2900–0153.''

SUPPLEMENTARY INFORMATION:

Title: Disability Benefits Questionnaire, VA Forms 29–8313 and 29–8313–1.

OMB Control Number: 2900–0153.

Type of Review: Extension of a currently approved collection.

Abstract: The forms are used by the policyholder to report conditions needed to continue disability insurance benefits. The information is used by VA to determine the insured's continuous entitlement to disability insurance benefits.

An agency may not conduct or sponsor, and a person is not required to respond to a collection of information unless it displays a currently valid OMB control number. The Federal Register Notice with a 60-day comment period soliciting comments on this collection of information was published on March 24, 1998 at page 14180.

Affected Public: Individuals or households.

Estimated Annual Burden: 15,000 hours.

Estimated Average Burden Per Respondent: 15 minutes.

Frequency of Response: Annually.

Estimated Number of Respondents: 60,000.

Estimated Number of Respondents: 83,500.

Send comments and recommendations concerning any aspect of the information collection to VA's OMB Desk Officer, Allison Eydt, OMB Human Resources and Housing Branch, New Executive Office Building, Room 10235, Washington, DC 20503 (202) 395–4650. Please refer to ''OMB Control No. 2900–0153'' in any correspondence.

Dated: August 24, 1998.

By direction of the Secretary:

Donald L. Neilson,

Director, Information Management Service.

[FR Doc. 98–23722 Filed 9–2–98; 8:45 am]

BILLING CODE 8320–01–P

DEPARTMENT OF VETERANS AFFAIRS

[OMB Control No. 2900–0159]

Agency Information Collection Activities Under OMB Review

AGENCY: Veterans Benefits Administration, Department of Veterans Affairs.

ACTION: Notice.

SUMMARY: In compliance with the Paperwork Reduction Act (PRA) of 1995 (44 U.S.C., 3501 *et seq.*), this notice announces that the Veterans Benefits Administration (VBA), Department of Veterans Affairs, has submitted the collection of information abstracted below to the Office of Management and Budget (OMB) for review and comment. The PRA submission describes the nature of the information collection and its expected cost and burden; it includes the actual data collection instrument.

DATES: Comments must be submitted on or before October 5, 1998.

FOR FURTHER INFORMATION OR A COPY OF THE SUBMISSION CONTACT: Ron Taylor, Information Management Service (045A4), Department of Veterans Affairs, 810 Vermont Avenue, NW, Washington, DC 20420, (202) 273–8015 or FAX (202) 273–5981. Please refer to ''OMB Control No. 2900–0159.''

SUPPLEMENTARY INFORMATION:

Title: Matured Endowment Notification, VA Form 29–5767.

OMB Control Number: 2900–0159.

Type of Review: Extension of a currently approved collection.

Abstract: The form is used to notify the insured that his/her endowment policy has matured and to solicit the disposition of the proceeds of the policy. The information collected is required by law and is used by VA to process the insured's request.

An agency may not conduct or sponsor, and a person is not required to respond to a collection of information unless it displays a currently valid OMB control number. The **Federal Register** Notice with a 60-day comment period soliciting comments on this collection of information was published on March 24, 1998 at page 14178.

Affected Public: Individuals or households.

Estimated Annual Burden: 2,867 hours.

Estimated Average Burden Per Respondent: 20 minutes.

Frequency of Response: Generally one time.

Estimated Number of Respondents: 8,600.

Send comments and recommendations concerning any aspect of the information collection to VA's OMB Desk Officer, Allison Eydt, OMB Human Resources and Housing Branch, New Executive Office Building, Room 10235, Washington, DC 20503 (202) 395–4650. Please refer to ''OMB Control No. 2900–0159'' in any correspondence.

Dated: August 12, 1998.

By direction of the Secretary.

Donald L. Neilson,

Director, Information Management Service.

[FR Doc. 98–23723 Filed 9–2–98; 8:45 am]

BILLING CODE 8320–01–P

DEPARTMENT OF VETERANS AFFAIRS

[OMB Control No. 2900–0212]

Agency Information Collection Activities Under OMB Review

AGENCY: Veterans Benefits Administration, Department of Veterans Affairs.

ACTION: Notice.

SUMMARY: In compliance with the Paperwork Reduction Act (PRA) of 1995 (44 U.S.C., 3501 *et seq.*), this notice announces that the Veterans Benefits Administration (VBA), Department of Veterans Affairs, has submitted the collection of information abstracted below to the Office of Management and Budget (OMB) for review and comment. The PRA submission describes the nature of the information collection and its expected cost and burden; it includes the actual data collection instrument.

DATES: Comments must be submitted on or before October 5, 1998.

FOR FURTHER INFORMATION OR A COPY OF THE SUBMISSION CONTACT: Ron Taylor, Information Management Service (045A4), Department of Veterans Affairs, 810 Vermont Avenue, NW, Washington, DC 20420, (202) 273–8015 or FAX (202) 273–5981. Please refer to ''OMB Control No. 2900–0212.''

SUPPLEMENTARY INFORMATION:

Title and Form Number: Veterans Mortgage Life Insurance Statement, VA Form 29–8636.

OMB Control Number: 2900–0212.

Type of Review: Extension of a currently approved collection.

Abstract: The form is used by veterans who have received Specially Adapted Housing Grants to decline Veterans Mortgage Life Insurance or to provide information upon which the insurance premium can be based. The information is used by VA to process the veteran's request.

An agency may not conduct or sponsor, and a person is not required to respond to a collection of information unless it displays a currently valid OMB control number. The **Federal Register** Notice with a 60-day comment period soliciting comments on this collection of information was published on January 29, 1998 at page 4523.

Affected Public: Individuals or households.

Estimated Annual Burden: 113 hours.

Estimated Average Burden Per Respondent: 15 minutes.

Frequency of Response: On occasion.

Estimated Number of Respondents: 450.

Send comments and recommendations concerning any

aspect of the information collection to VA's OMB Desk Officer, Allison Eydt, OMB Human Resources and Housing Branch, New Executive Office Building, Room 10235, Washington, DC 20503 (202) 395–4650. Please refer to ''OMB Control No. 2900–0212'' in any correspondence.

Dated: August 18, 1998.

By direction of the Secretary.

Donald L. Neilson,

Director, Information Management Service.

[FR Doc. 98–23724 Filed 9–2–98; 8:45 am]

BILLING CODE 8320–01–U

DEPARTMENT OF VETERANS AFFAIRS

[OMB Control No. 2900–0317]

Agency Information Collection Activities Under OMB Review

AGENCY: Veterans Benefits Administration, Department of Veterans Affairs.

ACTION: Notice.

SUMMARY: In compliance with the Paperwork Reduction Act (PRA) of 1995 (44 U.S.C., 3501 *et seq.*), this notice announces that the Veterans Benefits Administration (VBA), Department of Veterans Affairs, has submitted the collection of information abstracted below to the Office of Management and Budget (OMB) for review and comment. The PRA submission describes the nature of the information collection and its expected cost and burden; it includes the actual data collection instrument.

DATES: Comments must be submitted on or before October 5, 1998.

FOR FURTHER INFORMATION OR A COPY OF THE SUBMISSION CONTACT: Ron Taylor, Information Management Service (045A4), Department of Veterans Affairs, 810 Vermont Avenue, NW, Washington, DC 20420, (202) 273–8015 or FAX (202) 273–5981. Please refer to ''OMB Control No. 2900–0317.''

SUPPLEMENTARY INFORMATION:

Title and Form Number: Request for Identifying Information Re: Veteran's Loan Records, VA Form Letter 26–626.

OMB Control Number: 2900–0317.

Type of Review: Extension of a currently approved collection.

Abstract: The form letter is used to notify a correspondent that additional information is needed in order to identify and associate the previous correspondence with the correct veteran's loan application or loan records.

An agency may not conduct or sponsor, and a person is not required to respond to a collection of information unless it displays a currently valid OMB control number. The **Federal Register** Notice with a 60-day comment period soliciting comments on this collection of information was published on January 29, 1998 at page 4526.

Affected Public: Individuals or households.

Estimated Annual Burden: 200 hours.

Estimated Average Burden Per Respondent: 5 minutes.

Frequency of Response: On occasion.

Estimated Number of Respondents: 2,400.

Send comments and recommendations concerning any aspect of the information collection to VA's OMB Desk Officer, Allison Eydt, OMB Human Resources and Housing Branch, New Executive Office Building, Room 10235, Washington, DC 20503 (202) 395–4650. Please refer to ''OMB Control No. 2900–0317'' in any correspondence.

Dated: August 24, 1998.

By direction of the Secretary.

Donald L. Neilson,

Director, Information Management Service.

[FR Doc. 98–23725 Filed 9–2–98; 8:45 am]

BILLING CODE 8320–01–U

DEPARTMENT OF VETERANS AFFAIRS

[OMB Control No. 2900–0394]

Agency Information Collection Activities Under OMB Review

AGENCY: Veterans Benefits Administration, Department of Veterans Affairs.

ACTION: Notice.

SUMMARY: In compliance with the Paperwork Reduction Act (PRA) of 1995 (44 U.S.C., 3501 *et seq.*), this notice announces that the Veterans Benefits Administration (VBA), Department of Veterans Affairs, has submitted the collection of information abstracted below to the Office of Management and Budget (OMB) for review and comment. The PRA submission describes the nature of the information collection and its expected cost and burden; it includes the actual data collection instrument.

DATES: Comments must be submitted on or before October 5, 1998.

FOR FURTHER INFORMATION OR A COPY OF THE SUBMISSION CONTACT: Ron Taylor, Information Management Service (045A4), Department of Veterans Affairs, 810 Vermont Avenue, NW, Washington, DC 20420, (202) 273–8015 or FAX (202) 273–5981. Please refer to ''OMB Control No. 2900–0394.''

SUPPLEMENTARY INFORMATION:

Title: Certification of School Attendance—REPS, VA Form 21–8926.

OMB Control Number: 2900–0394.

Type of Review: Reinstatement, with change, for a previous approved collection for which approval has expired.

Abstract: The VA administers the Restored Entitlement Program for Survivors (REPS). The program pays VA benefits to certain surviving spouses and children of veterans who died in service prior to August 13, 1981 or who died as a result of a service-connected disability incurred or aggravated prior to August 13, 1981. Child beneficiaries must be enrolled full-time in an approved postsecondary school. The information reported on VA Form 21–8926 is used by VA to verify that an individual who is receiving REPS benefits based on schoolchild status is in fact enrolled full-time in an approved school and is otherwise eligible for continued benefits.

An agency may not conduct or sponsor, and a person is not required to respond to a collection of information unless it displays a currently valid OMB control number. The **Federal Register** Notice with a 60-day comment period soliciting comments on this collection of information was published on April 9, 1998 at page 17485.

Affected Public: Individuals or households.

Estimated Annual Burden: 300 hours.

Estimated Average Burden Per Respondent: 15 minutes.

Frequency of Response: On occasion.

Estimated Number of Respondents: 1,200.

Send comments and recommendations concerning any aspect of the information collection to VA's OMB Desk Officer, Allison Eydt, OMB Human Resources and Housing Branch, New Executive Office Building, Room 10235, Washington, DC 20503 (202) 395–4650. Please refer to ''OMB Control No. 2900–0394'' in any correspondence.

Dated: August 24, 1998.

By direction of the Secretary.

Donald L. Neilson,

Director, Information Management Service.

[FR Doc. 98–23726 Filed 9–2–98; 8:45 am]

BILLING CODE 8320–01–U

Corrections

Federal Register

Vol. 63, No. 171

Thursday, September 3, 1998

This section of the FEDERAL REGISTER contains editorial corrections of previously published Presidential, Rule, Proposed Rule, and Notice documents. These corrections are prepared by the Office of the Federal Register. Agency prepared corrections are issued as signed documents and appear in the appropriate document categories elsewhere in the issue.

DEPARTMENT OF THE INTERIOR

Office of Surface Mining Reclamation and Enforcement

30 CFR Part 917

[KY-217-FOR]

Kentucky Regulatory Program

Correction

In rule document 98–20468, beginning on page 40825, in the issue of Friday, July 31, 1998, make the following correction:

§ 917.17 [Corrected]

On page 40827, in the third column, in amendatory instruction 4., in the first line, ''917.16'' should read ''917.17''.

BILLING CODE 1505-01-D

DEPARTMENT OF TRANSPORATION

Federal Aviation Administration

14 CFR Part 39

[Docket No. 98-SW-22-AD; Amendment 39-10675; AD 98-15-26]

Airworthiness Directives; McDonnell Douglas Helicopter Systems Model 369A, 369D, 369E, 369F, 369FF, 369H, 369HE, 369HM, 369HS, 500N, 600N, and OH-6A Helicopters

Correction

In rule document 98–19615, beginning on page 39492, in the issue of Thursday, July 23, 1998, make the following corrections:

1. On page 39493, in the first column, under the heading **ADDRESSES**, in the second paragraph, in the sixth line, ''602-891-6522'' should read ''602-891-3667, fax 602-891-6522''.

2. On page 39493, in the first column, under the heading **ADDRESSES**, in the second paragraph, in the tenth line, ''For'' should read ''Fort''.

3. On page 39493, in the second column, in the first full paragraph, in the 11th line, '' Ad'' should read ''AD''.

4. On page 39493, in the third column, the fifth line, ''1965,'' should read ''1995,''.

§ 39.13 [Corrected]

5. On page 39494, in the second column, in amendatory instruction 2., in the first line ''3913'' should read ''39.13''.

6. On page 29494, in the second column, under the heading **AD 98-15-26 McDonnell Douglas**, in the third line, ''AD-98-08-15,'' should read ''AD-98-03-15''.

BILLING CODE 1505-01-D

DEPARTMENT OF TRANSPORTATION

Federal Aviation Administration

14 CFR Part 71

[Airspace Docket No. 98–AWP–11]

Modification of Class E Airspace; Ukiah, CA

Correction

In rule document 98–18553, beginning on page 37489, in the issue of Monday, July 13, 1998, make the following correction:

§ 71.1 [Corrected]

On page 37489, in the third column, in the third line from the bottom, ''39.9'' should read ''39.1''.

BILLING CODE 1505-01-D

federal register

Thursday
September 3, 1998

Part II

Department of Labor

Office of the Secretary

Women's Bureau: National Women Veterans Original Art Design Search; Notice

DEPARTMENT OF LABOR

Office of the Secretary

Women's Bureau: Notice of National Women Veterans Original Art Design Search

AGENCY: Office of the Secretary, Labor.

ACTION: Notice of National Women Veterans Original Art Design Search.

SUMMARY: The U.S. Department of Labor Women's Bureau, the Employment and Training Administration's U.S. Employment Service and the Veterans' Employment and Training Service are holding a national women veterans original art search in which any U.S. military veteran may compete for first, second, and third places for the best original art works that depict women as U.S. military veterans with a ''Hire a Vet: A Model of Success'' theme. The first place winning art work will be printed as posters for display at the State Employment Services Offices, local Job Service Offices, one-stop career centers, veterans offices, and other offices where women veterans seek employment and retraining opportunities. The first place entrant's poster will be unveiled at the U.S. Department of Labor's Annual Salute to Veterans program on November 10, 1998, hosted by the Veterans' Employment and Training Service.

DATES: Original art work must be postmarked no later than October 16, 1998.

ADDRESSES: Original art work and Artist Release Form (see Section G of this Notice) must be submitted to Cheryl Edwards, U.S. Department of Labor, Women's Bureau, 200 Constitution Avenue, NW, Room S–3311, Washington, DC 20210.

FOR FURTHER INFORMATION CONTACT: Cornelia H. Moore, Regional Administrator, U.S. Department of Labor Women's Bureau, Philadelphia, PA 19104, 1–800–379–9042.

SUPPLEMENTARY INFORMATION: The contest is open to any U.S. military veteran. A host of employment-related benefits are available to eligible U.S. military veterans. Female military veterans miss out on many of these opportunities when they fail to identify themselves as military veterans. The poster will serve as a reminder to women who served in the armed forces that they should identify themselves as former active military so they can receive priority information regarding employment opportunities. The poster will be displayed at State Employment Services Offices, local Job Service Offices, one-stop career centers, veterans offices and other offices where women veterans seek employment and retraining opportunities. The poster will promote public understanding of the resources and services provided by the U.S. Department of Labor to its constituents.

The panel of contest judges will comprise representatives of the U.S. Department of Labor's Women's Bureau, the Veterans' Employment and Training Service and the U.S. Employment Service. The winners will be notified no later than November 2, 1998. The winners will be officially announced on November 10, 1998 at the Department of Labor's Annual Salute to Veterans program.

The poster of the first place entrant will be displayed at the Department's Salute to Veterans program on November 10, 1998.

A. *Theme of the Posters:* Hire a Vet: A Model of Success.

B. *Eligibility:* Any U.S. Military Veteran who served in the active military, naval, or air service, and who was discharged or released therefrom under conditions other than dishonorable (38 U.S.C. 101(2)).

C. *Guidelines:*

(1) Art work may be in any colors, including black and white.

(2) Entry must be the military veteran's original work.

(3) Size may range from a minimum of 8½ × 11 inches to a maximum of 18 × 24 inches. Art work should be mounted on a 1/4 inch white foam board. No border is necessary. Posters may be horizontal or vertical.

(4) All media for two-dimensional work, such as woodblock, letterpress, lithography, color lithography, painting, silkscreen, digital, and photography, are acceptable.

(5) Before an artist can receive an award for their art work, the Department of Labor will require the artist to sign an Artist Release Form (see Section G of this Notice).

(6) Mail entries in a reusable container that can be remailed to the entrant upon conclusion of the program. (For exhibition purposes a ½-inch thick hanging strip and spacer blocks will be added to the back of the foam core. Posters will be returned with the hanging strips and blocks still attached.)

(7) Submission of art work for this contest will constitute acceptance of all terms of the Artist Release Form (see Section G of this Notice).

D. *Exhibition:* Depending on the number of entries and space availability, the Women's Bureau may exhibit any or all entries in the U.S. Department of Labor's Great Hall, 200 Constitution Avenue, N.W., Washington, D.C. from November 16, 1998 through December 18, 1998, and thereafter at its discretion.

E. *Submission:* Art work must be postmarked or delivered on or before

October 16, 1998 to: Ms. Cheryl Edwards, U.S. Department of Labor, Women's Bureau, 200 Constitution Avenue, N.W., Room S–3311, Washington, D.C., 20210.

F. *Judging:* Judges may award up to 20 points for each criterion:

Judge	#1	#2	#3
Overall Design, 20 POINTS			
Creativity, 20 POINTS			
Color/Balance/and Composition, 20 POINTS			
Technical Skill and Neatness, 20 POINTS			
Reflection of theme and appropriateness, 20 POINTS			

Decisions of the judges will be final.

G. *Artist Licensing, Certification, and Release Form:* In order for an artist to be eligible to receive any award for this National Women Veterans Original Art Search, the artist must have signed the following Release Form:

I, _____, do hereby confer exclusive rights upon the United States Department of Labor (USDOL) to display, reproduce, distribute, and sell my entry in any form until November 30, 2000. Thereafter, I authorize USDOL the right to display my entry, as well as sell and distribute reproductions of my entry made prior to November 30, 2000.

I certify that this entry is my own original work for which I own all rights, and no other person is or will be authorized to reproduce or sell it for the duration of this agreement. I also certify that there has been no prior publication of this work. I understand that my entry will be returned with the hanging strips and blocks, used for exhibition of my entry, still attached. I hereby release USDOL, including the Women's Bureau,

the Veterans' Employment and Training Service, and the United States Employment Service, from any and all liability for damage or loss of my entry.

_____
Signature of Artist

_____
Print Name

_____
Address (including zip code)

_____
Telephone Number and Fax Number (Including area codes)

* * * * *

Signed at Washington, D.C. this 28 day of August, 1998.

Delores L. Crockett,

Field Coordinator, Women's Bureau.

[FR Doc. 98–23706 Filed 9–2–98; 8:45 am]

BILLING CODE 4510–23–P

federal register

Thursday
September 3, 1998

Part III

Environmental Protection Agency

40 CFR Parts 141 and 143

National Primary Water Regulations: Analytical Methods for Regulated Drinking Water Contaminants; Final Rule and Proposed Rule

ENVIRONMENTAL PROTECTION AGENCY

40 CFR Parts 141 and 143

[WH–FRL–6132–2]

RIN 2040–AC77

National Primary and Secondary Drinking Water Regulations: Analytical Methods for Regulated Drinking Water Contaminants

AGENCY: Environmental Protection Agency (EPA).

ACTION: Direct final rule.

SUMMARY: EPA is approving the use of updated versions of previously approved American Society for Testing and Materials (ASTM), Standard Methods for Examination of Water and Wastewater (Standard Methods or SM) and Environmental Protection Agency (EPA) analytical methods for compliance determinations of chemical and microbiological contaminants in drinking water. At the same time, the Agency is withdrawing approval of the previous versions of the 14 EPA methods. Previous versions of the SM and ASTM methods will continue to be approved. The Agency is promulgating these methods as a direct final rule because the Agency does not expect adverse comments and wants to ensure prompt availability of the methods for compliance monitoring. In addition, the Agency is making minor technical corrections or clarifications to the regulations, amending the regulation to change the composition of Performance Evaluation (PE) samples and require successful analysis of PE samples once each year.

DATES: This final rule will become effective without further notice on January 4, 1999, unless EPA receives relevant adverse comment by November 2, 1998.

If the Agency receives such comments, EPA will withdraw this direct final rule before its effective date by publishing a timely withdrawal in the **Federal Register** informing the public the rule will not take effect.

The incorporation by reference of the publications listed in today's rule is approved by the Director of the Federal Register as of January 4, 1999.

In accordance with 40 CFR 23.7, this rule shall be considered final for purposes of judicial review at 1:00 p.m. (Eastern time) on January 15, 1999.

ADDRESSES: Written comments may be submitted either by mail or elecrtronically. Comments may be sent to the W–97–04 Drinking Water Analytical Methods Final Comment Clerk, U.S. Environmental Protection Agency, Water Docket, MC 4101, 401 M Street, SW, Washington, D.C. 20460. Please submit any references cited in your comments. EPA would appreciate an original and 3 copies of your comments and enclosures (including references).

This **Federal Register** document has been placed on the Internet for public review and downloading at the following location: http://www.epa.gov/fedrgstr. The record for this rulemaking has been established under docket number W–97–04. Supporting documents (including references and methods cited in this notice) are available for review at the U.S. Environmental Protection Agency, Water Docket, East Tower Basement, 401 M Street, SW, Washington, D.C. 20460. For access to the docket materials, call 202–260–3027 on Monday through Friday, excluding Federal holidays, between 9:00 a.m. and 3:30 p.m. Eastern Time for an appointment.

Copies of final methods published by EPA are also available for a nominal cost through the National Technical Information Service (NTIS), U.S. Department of Commerce, 5285 Port Royal Road, Springfield, VA 22161. NTIS also may be reached at 800–553–6847. All other methods must be obtained from the publisher. Publishers (with addresses) for all approved methods are cited at 40 CFR Part 141 and in the references section of today's rule.

FOR FURTHER INFORMATION CONTACT: Jitendra Saxena, Ph.D., Standards and Risk Management Division, Office of Ground Water and Drinking Water (MC–4607), U.S. Environmental Protection Agency, 401 M Street, SW, Washington, D.C. 20460, (202) 260–9579. Information may also be obtained from the EPA Safe Drinking Water Hotline. Callers within the United States may reach the Hotline at (800) 426–4791. The Hotline is open Monday through Friday, excluding Federal holidays, from 9:00 a.m. to 5:30 p.m. Eastern Time.

For technical information regarding microbiology methods, contact Paul S. Berger, Ph.D., Office of Ground Water and Drinking Water (MC–4607), U.S. Environmental Protection Agency, Washington, D.C. 20460, telephone, (202) 260–3039. For technical information regarding chemistry methods, contact Richard Reding, Ph.D., Office of Ground Water and Drinking Water, U.S. Environmental Protection Agency, Cincinnati, Ohio 45268, telephone (513) 569–7961. For a list of Regional Contacts see **SUPPLEMENTARY INFORMATION.**

SUPPLEMENTARY INFORMATION:

Potentially Regulated Entities

EPA Regions, as well as States, Territories, and Tribes with primacy to administer the regulatory program for public water systems under the Safe Drinking Water Act, sometimes conduct analyses to measure for contaminants in water samples, but often require the public water systems themselves to conduct such analysis. If EPA has established a maximum contaminant level (''MCL'') for a given drinking water contaminant, the Agency also ''approves'' standardized testing procedures (i.e., promulgated through rulemaking) for analysis of the contaminant. Once EPA standardizes such test procedures, analysis using those procedures (or approved alternate test procedures) is required. Therefore, States, Territories, Tribes, and public water systems required to test water samples are potentially regulated by the standardization of testing procedures in this rulemaking. Categories and entities that may ultimately be regulated include:

Category	Examples of potentially regulated entities
State and Territorial Governments and Indian Tribes	States, Territories, and Tribes that analyze water samples on behalf of public water systems required to conduct such analysis; States, Territories, and Tribes that themselves operate public water systems required to conduct analytic monitoring
Industry	Industrial operators of public water systems
Municipalities	Municipal operators of public water systems

This table is not intended to be exhaustive, but rather provides a guide for readers regarding entities likely to be regulated by this action. This table lists the types of entities that EPA is now aware could potentially be regulated by

this action. Other types of entities not listed in the table could also be regulated. To determine whether your organization is or would be regulated by this action, you should carefully examine the applicability language at 40 CFR 141.2 (definition of public water system). If you have questions regarding the applicability of this action to a particular entity, consult the person listed in the preceding **FOR FURTHER INFORMATION CONTACT** section.

Regional Contacts

EPA Regional Offices:

I JFK Federal Bldg., One Congress Street, 11th Floor, Boston, MA 02203, Phone: 617–565–3602, Linda Murphy

II 290 Broadway, 24th Floor, New York, NY 10007, Phone: 212–637–3880, Walter Andrews

III 841 Chestnut Building, Philadelphia, PA 19107, Phone: 215–597–6511, Victoria Binetti

IV 345 Courtland Street, N.E., Atlanta, GA 30365, Phone: 404–347–2207, Stalling Howell

V 77 West Jackson Boulevard, Chicago, IL 60604, Phone: 312–886–6206, Charlene Denys

VI 1445 Ross Avenue, Suite 1200, Dallas, TX 75202, Phone: 214–655–7150, Larry Wright

VII 726 Minnesota Avenue, Kansas City, KS 66101, Phone: 913–551–7682, Robert Morby

VIII One Denver Place, 999 18th Street, Suite 500, Denver, CO 80202, Phone: 303–293–1652, Jack Rychecky

IX 75 Hawthorne Street, San Francisco, CA 94105, Phone: 415–744–1817, William Thurston

X 1200 Sixth Avenue, Seattle, WA 98101, Phone: 206–553–1893, Larry Worley

Table of Contents

I. Statutory Authority
II. Regulatory Background
III. Explanation of Today's Action
A. Approval of Updated Version of Compliance Analytical Methods
B. Use of Previous Version of Compliance Analytical Methods
C. Technical Corrections and Amendments
D. Recommendation of Additional Methods for Chloride and Sulfate
E. Performance-based Measurement System
IV. Regulation Assessment Requirements
V. References

I. Statutory Authority

The Safe Drinking Water Act (SDWA), as amended in 1996, requires EPA to promulgate national primary drinking water regulations (NPDWRs) which specify maximum contaminant levels (MCLs) or treatment techniques for drinking water contaminants SDWA section 1412, (42 USC 300g–1). NPDWRs apply to public water systems pursuant to SDWA section 1401, 42 USC 300f(1)(A). According to SDWA section 1401(1)(D) of the Act, NPDWRs include ''criteria and procedures to assure a supply of drinking water which dependably complies with such maximum contaminant levels; including quality control and testing procedures . . . .'' see 42 USC 300f(1)(D). In addition, SDWA section 1445(a) of the Act authorizes the Administrator to establish regulations for monitoring to assist in determining whether persons are acting in compliance with the requirements of the SDWA see 42 USC 300j–4. EPA's promulgation of analytical methods is authorized under these sections of the SDWA as well as the general rulemaking authority in SDWA section 1450(a), 42 USC 300j–9(a).

II. Regulatory Background

EPA has promulgated analytical methods for all currently regulated drinking water contaminants for which it has promulgated MCLs or monitoring requirements. In most cases, the Agency has approved use of more than one analytical method for measurement of a contaminant and laboratories may use any approved method for determining compliance with an MCL or monitoring requirement. After any regulation is published, EPA may amend the regulations to approve additional methods or modifications to approved methods. In addition, the Agency may withdraw methods that become obsolete or amend other requirements (such as certification requirements) associated with the use of approved methods. EPA takes these actions as quickly as possible after new or revised methods are published.

The most recent actions that included approving new or revised analytical methods were published on December 5, 1994 (59 *FR* 62456); May 14, 1996 (61 *FR* 24353) and on March 5, 1997 (62 *FR* 10168). In these final rules EPA approved use of new methods or modifications of existing methods that EPA believed were as good as, or better than, previously approved methods and test procedures. These rules approved methods for the analysis of chemical, microbiological and radiological contaminants in drinking water samples.

III. Explanation of Today's Action

This rule approves new versions of currently approved Environmental Protection Agency (EPA) methods, American Society for Testing and Materials (ASTM) methods, and Standard Methods for the Examination of Water and Wastewater (Standard Methods or SM) for compliance with drinking water standards and monitoring requirements. Compared to the currently approved versions, the new versions contain primarily editorial or technical changes and other changes that make the methods easier to conduct or safer. The rule only withdraws previously approved versions of EPA methods. Previously approved versions of ASTM and Standard Methods are not withdrawn and laboratories may continue to use them. By today's action, EPA also recommends additional methods for monitoring of chloride and sulfate which are regulated under the National Secondary Drinking Water Regulations. Finally, today's action also corrects method citations and makes other minor technical corrections to the regulations.

The Agency is promulgating these regulatory actions as a ''direct final'' rule. A direct final rulemaking involves publishing of a rule with a delayed effective date as well as a companion proposed rule referencing the direct final rule and inviting public comment. The delayed effective date on the final rule allows for the receipt of relevant adverse comment before the direct final rule goes into effect. If EPA receives relevant adverse comments on the companion proposal on or before November 2, 1998, then EPA will take additional action necessary to respond to those comments prior to the effective date (i.e., withdraw any or all of the actions and proceed with a revised rule based on the companion proposal). EPA has chosen to use the direct final approach for these regulatory actions because the Agency does not expect to receive adverse public comments. Additionally, the procedure allows for the most expeditious implementation possible consistent with the Administrative Procedure Act (APA). If EPA decides to withdraw any or all of the actions, EPA will proceed with a revised rule based on the companion proposal.

A. Approval of Updated Version of Compliance Analytical Methods

The updated versions of previously approved methods discussed in this section contain changes that EPA believes will be considered non-controversial and useful by laboratory personnel and certification officials.

ASTM and Standard Methods

In this direct final rule, EPA is approving revised versions of ASTM methods and Standard methods that are

published respectively in the 1996 *Annual Book of ASTM Standards* [ASTM 1996] and in the 19th edition of *Standard Methods for the Examination of Water and Wastewater* [APHA 1995]. These methods include 6 revised ASTM Methods and 23 revised Standard Methods. EPA is also approving the unchanged versions of 19 ASTM methods and 31 Standard Methods that are published in the 1996 ASTM and 1995 Standard Methods publications. Although these 50 methods are not changed from previous versions, ASTM and Standard Methods reprints the unchanged methods along with the revised methods so that the books include all of the current versions of the chemical and microbiological methods published by the respective organization. Because EPA is not withdrawing approval of the currently approved version of any ASTM or Standard Method, approval of the revised methods via a direct final rulemaking should not have any adverse effect on users. Comments are not being solicited on the unchanged methods.

All 6 of the revised ASTM methods and 11 of the 23 revised Standard Methods contain only editorial changes or minor editorial clarifications. Twelve of the revised Standard Methods contain minor technical clarifications or voluntary but useful options, such as better explanations on conducting a specific step in the method, recommendations for safer handling or disposal of hazardous reagents, and options to use alternative procedures, reagents or equipment. The changes between the old and new versions of the 12 revised Standard Methods are described below.

Twelve of the revised Standard methods include eleven microbiology methods and one turbidity method. The eleven microbiology methods published in the 19th edition of Standard Methods have been extensively rewritten to improve clarity and ease of use. The revised methods are SM 9215B; SM 9221A,B,C,D,E; SM 9222A,B,C,D; and SM 9223. For the convenience of the user, the new versions contain certain steps that presently are only specified in the regulations at 40 CFR 141.21(f). Thus, the new versions eliminate the need to consult the Code of Federal Regulations to obtain directions for conducting certain steps in the analysis, such as use of MUG media in SM 9221E. The revised turbidity method is SM 2130B. Previously, EPA and Standard Methods adopted the same definition for primary standards in turbidity methods. In the 19th edition version of SM 2130B, only formazin polymer is designated as the primary standard reference suspension with all others being designated as secondary standards. This change is discussed in more detail by Posavec [AWWA 1996]. EPA considers this change to be acceptable and approves SM 2130B (19th ed.).

EPA Methods

This section discusses fourteen revised EPA methods, which are published in the manual ''Methods for the Determination of Organic Compounds in Drinking Water Supplement III'' (EPA Supplement III) [EPA 1995]. Previous versions of these methods were approved in final rules published on December 5, 1994 (59 *FR* 62456, the methods rule) and on May 14, 1996 (61 *FR* 24353, the ICR rule). The new versions contain minor corrections, minor technical enhancements and editorial improvements. The new versions also include the mandatory method modifications that were approved in the 1994 methods rule and published in the EPA document ''Technical Notes on Drinking Water Methods'' (Tech Notes) [EPA 1994b]. In the 1994 rule, EPA stated that the modifications in Tech Notes would be placed in the affected method when the method was revised for the next supplement of the manual of organic methods. EPA revised these methods in the August 1995 publication of the revised versions in EPA Supplement III.

Under the Administrative Procedure Act (APA) and SDWA, EPA may approve a new method and withdraw a previously approved method within 30 days and 18 months, respectively, after promulgation of a final rule. The timing of the withdrawal of the older EPA methods should have no adverse effect on laboratories because of the 17 month transition period from the old to the new versions. This overlap in approval and withdrawal dates gives laboratories sufficient time to become certified with the new methods. Because the changes between the new and older versions are minor, EPA expects that States will honor the certification status long enough for laboratories to conveniently change to the new versions even if this should take more than 17 months.

As explained in the introduction to EPA's Supplement III manual, all the methods in EPA Supplement III either have a new revision number or a new method number. New revision numbers for Methods 502.2, 504.1, 505, 506, 507, 508, 508.1, 515.1, 515.2, 524.2, 525.2 and 531.1 indicate a relatively small modification to the method. New method numbers for Methods 551.1 and 552.2 indicate a relatively larger change in the method that significantly enhances the performance of the method. Differences between the previous version and the new version of EPA methods (EPA Supplement III) of each method are described below.

Quality Control Improvements in EPA Methods 505, 506, 507, 508, 515.1, 515.2, 531.1, 551.1 and 552.2

EPA changed the quality control requirements in some EPA Supplement III methods to improve uniformity from EPA method to method and to ensure the quality of the data. For example, the criteria in methods 505, 506, 507, 508, 515.1, 515.2, 531.1, 551.1 and 552.2 for judging the acceptability of analyte recoveries have been changed to put an upper limit on the allowed variability. Without this upper limit the allowed variability, which was based only on the percent relative standard deviation (RSD) of previous recoveries and not a fixed numerical limit, could increase to unacceptable limits if the RSD continued to increase during routine use of the method.

The revised criteria still allow the recoveries to vary by as much as three times the RSD provided this value does not exceed a fixed numerical limit. The fixed (usually ±30%) limit is specified in the initial demonstration of capability section of each EPA method. EPA uses the initial demonstration of capability to set a fixed upper limit for analyte recoveries because recoveries should not vary more in routine use than when the method was first validated by the laboratory.

Detector Substitution in EPA Methods 505, 507, 508 and 508.1

EPA Methods 505 and 508.1 measure several regulated analytes. EPA Method 508 measures a subset of these analytes and EPA Method 507 measures the remainder. EPA Methods 505, 508 and 508.1 were developed and validated by EPA only with an electron capture (EC) detector and Method 507 only with a nitrogen-phosphorous (NP) detector. Previous versions of EPA Methods 505, 507 and 508 allowed use of either an EC or NP detector provided the method performance criteria were met. EPA has data [NY 1996] from the Suffolk County Water Authority (a New York laboratory) that demonstrate better sensitivity for simazine, atrazine, alachlor, butachlor and metolachlor using a NP detector with EC Method 508.1 conditions. Because EPA believes interchange of detectors may work under some circumstances for some analytes, in today's rule EPA allows use of either an EC or NP detector in EPA Methods 505, 507, 508 and 508.1

provided all regulatory limits and quality control criteria in the method are met.

Recommendations to Improve Detection Limits in EPA Method 505 and for Total Metals

EPA is recommending the use of alternative approved methods when lower detection limits are needed for contaminants analyzed with EPA Method 505. Although substitution of a NP detector for the EC detector specified in EPA Method 505 will improve detection limits for nitrogen-containing compounds, it will not improve detection of non-nitrogen analytes, such as aroclors. Rather than change the EC detector in EPA Method 505, EPA recommends in a footnote to the table of approved methods at 40 CFR 141.24(e) use of the other approved EPA Methods 508.1, 525.2, 507 and 508. EPA especially recommends use of EPA Method 508.1 when low detection limits are required or when users want to use small volumes of solvent. Reasons for the difference in detection limit performance between EPA Method 505 and the alternate methods are described below.

In 1986 EPA developed EPA Method 505 using the EC detector as an alternative to EPA Methods 507 and 508. A primary advantage of EPA Method 505 was the use of less sample (35 ml compared to 1 L) and less solvent (2 ml of hexane compared to 180 ml of methylene chloride). However, the analyte-to-water sample concentration factor in EPA Methods 507 and 508 of 200:1 is more favorable than the 17.5:1 factor in EPA Method 505. The lower concentration factor means that it is more difficult to obtain low detection limits with EPA Method 505. EPA developed Method 508.1 in 1994 as an alternative to EPA Methods 505, 507 and 508. EPA Method 508.1, through use of solid phase extraction media, combines the advantages of high analyte concentration (1000:1 concentration factor) and small volumes of extraction and rinsing solvents (about 40 ml).

EPA is also specifying how to achieve lower detection limits in the analysis of metals. In footnotes to the table of approved methods at 40 CFR 141.23(k)(1), EPA provides instructions on using various preconcentration techniques to achieve better method sensitivity. EPA used these techniques to determine many of the detection limits that are specified in EPA Methods 200.7, 200.8 and 200.9.

Additional Analytes in EPA Supplement III versions of Methods 508.1, 525.2 and 551.1

EPA Method 508.1, Rev. 1.0 covered many EPA Method 507 and 508 analytes, but not butachlor, PCBs or toxaphene. Based on new data that is published in Rev. 2.0, EPA Method 508.1 now measures butachlor, toxaphene and PCBs (as aroclors). EPA is also publishing data in EPA Method 525.2, Rev. 2.0 that supports approval of this method for Aroclor analysis. EPA Method 551.1, which is replacing EPA Method 551, contains data to support approval of the method for the analysis of fourteen additional contaminants. The new regulated analytes measured by EPA Method 551.1 that were not measured by EPA Method 551 are: 1,1,2-trichloroethane, alachlor, atrazine, endrin, heptachlor, heptachlor epoxide, hexachlorobenzene, hexachlorocyclopentadiene, lindane, methoxychlor and simazine. The new unregulated analytes measured by EPA Method 551.1 are: 1,2,3-trichloropropane, metolachlor and metribuzin.

Other Differences in Currently Approved and EPA Supplement III Versions of EPA Methods

Methods in EPA Supplement III are listed below by method and revision number along with a brief description of some of the changes new to the EPA Supplement III version of the method.

EPA Method 502.2, Rev. 2.1 This method is unchanged from Rev. 2.0 (as modified by Tech Notes) except for minor editorial clarifications and the removal of an option to use single point calibration. This single point calibration option had been carried forward from versions of EPA Method 502 that were developed in the late 1970's when gas chromatographs and data systems were much less advanced than today. EPA Method 502.2 is the only multi-analyte method in which EPA allowed single point calibration exception to method QC requirements. Single point calibration was intended for occasional use when one or two analytes of the sixty analytes failed the continuing calibration check specified in the method and when these analytes were not routinely expected to be a source of drinking water contamination. Under the single point calibration option, if an uncalibrated analyte was detected in a compliance sample, EPA allowed quantitation using a standard very close to the unknown amount.

EPA is removing single point calibration from EPA Method 502.2 because advances in GC technology in the last two decades make it unnecessary. Analytes fall outside the QC criteria of the method less frequently today and when they do, the calibration can be rechecked quickly using modern data systems. It is important to recheck the calibration because, rather than being a random error, the QC failure may indicate that the method detection limit has changed enough to produce false negative results in compliance analyses.

EPA Method 504.1, Rev. 1.1 Other than minor editorial clarifications, this method is unchanged from the previous version of 504.1 (as modified by Tech Notes). The EPA Supplement III version (Rev. 1.1) more clearly states that dibromochloromethane is a commonly occurring drinking water contaminant that can easily be misidentified as ethylene dibromide unless the confirmatory procedures described in the method are adhered to.

EPA Method 505, Rev. 2.1 This method is modified from Rev. 2.0 as described above regarding substitution of a NP detector and some changes in the quality control requirements. The EPA Supplement III version also contains additional instructions on the measurement of multi-component mixtures, such as aroclors.

EPA Methods 506, 515.1, 515.2, 524.2 and 531.1 Other than minor editorial clarifications and the quality control changes discussed above, the EPA Supplement III version of each of these methods is unchanged from the previous version. Data tables in the EPA Supplement III versions of EPA Methods 515.1 and 531.1 are reorganized for clarity and addition of method detection limits.

EPA Method 507, Rev. 2.1 This method is modified from Rev. 2.0 as described above regarding substitution of an EC detector and some changes in the quality control requirements. Data tables are reorganized for clarity and addition of method detection limits.

EPA Method 508, Rev. 3.1 This method was modified from Rev. 3.0 as described above regarding substitution of a NP detector and some changes in the quality control requirements. Rev. 3.1 also contains additional instructions on the measurement of multi-component mixtures, such as aroclors. Data tables are reorganized for clarity and addition of method detection limits.

EPA Method 508.1, Rev. 2.0 This method is modified from Rev. 1.0 as described above regarding substitution with a NP detector and addition of aroclors, butachlor and toxaphene, as analytes. Sample holding times, analyte recoveries and other method performance data were obtained using

the same procedures used in EPA Method 525.2. These procedures include acidification of the sample at the time of collection and use of solid-phase extraction (SPE) media to extract the analytes from the drinking water sample. The analytes in EPA Methods 508.1 and 525.2 with SPE are similar to those measured with EPA Methods 505, 507 and 508, which use liquid-liquid extraction (LLE) to extract the analytes. Although the analytes are similar, only the SPE methods (in both the previous and the EPA Supplement III versions) require that the sample be acidified. Acidification increases the SPE extraction efficiency for some analytes and the holding times for some analytes are longer relative to the LLE methods. EPA develops multi-analyte methods with sample collection and preparation procedures that are appropriate for the entire analyte list. Although acidification may not be necessary to measure every EPA Method 508.1 or 525.2 analyte, EPA did not develop these methods to allow the omission of some sampling or procedural steps for laboratories that analyze only a portion of the method analytes. Thus, EPA continues to require acidification of samples that are analyzed with EPA Methods 508.1 and 525.2 using SPE.

EPA Method 509, Rev. 1.1 This method is a single analyte method for the pesticide metabolite ethylenethiourea (ETU). This method is not proposed in today's rule because there are no drinking water monitoring requirements for ETU. However, EPA recommends this method for use by systems wishing to measure ETU in drinking water samples.

EPA Method 525.2, Rev. 2.0 As discussed above, Rev. 2.0 is modified from Rev. 1.0 to add aroclors as analytes. The method instructions also clarify that the extract holding time is measured from the time of extraction and not from the time of sample collection.

EPA Method 551.1, Rev. 1.0 EPA Method 551.1 is an improvement to EPA Method 551 because it uses a buffer that increases sample holding times from 2 days to 14 days. EPA Method 551.1 was recently approved for ICR monitoring at 40 CFR 141.142 in the 1996 ICR rule (61 *FR* 24383, table 7). It will be approved as a replacement for EPA Method 551 at 40 CFR 141.24(e) for analysis of trihalomethanes and twenty other organic chemicals. Besides the buffer, other differences between EPA Methods 551 (as modified by Tech Notes) and 551.1 include use of surrogate and other quality control standards to improve the precision and accuracy of the method. The QC sections of the method have been changed to accommodate these changes to the method.

EPA Method 552.2, Rev. 1.0 This liquid-liquid extraction (LLE) method was developed as an alternative to EPA Method 552.1, which is a solid phase extraction (SPE) method. EPA Method 552.2 using LLE was approved for measurement of several disinfection by-products in the 1996 ICR rule and in today's rule EPA is approving it for analysis of dalapon. To allow users a choice of either liquid or solid phase extraction EPA is not withdrawing approval of EPA Method 552.1 using SPE.

B. Use of Previous Versions of Compliance Analytical Methods

In the 1994 methods rule (59 FR 62456), EPA approved only one version of each compliance method that was published by ASTM, Standard Methods or EPA. The effective date of this action was July 1, 1996. EPA approved only the 1994 versions because these versions generally contained significant improvements in safety, quality assurance or performance. In today's rule EPA is approving methods that are in the 1996 ASTM Annual Book and in the 19th edition of Standard Methods, but EPA is not withdrawing approval of the currently approved versions which are published in the 1994 ASTM Annual Book and in the 18th edition of Standard Methods. EPA is approving use of the two versions of the same method because the differences between the versions are too minor to require users to purchase new books. Depending on the nature and extent of future revisions, EPA may propose to approve only the most recent versions of methods published by ASTM or the relevant Standard Methods committee.

Previously approved versions of EPA methods will remain available for compliance monitoring until March 3, 2000. The previous versions of EPA methods are 502.2 Rev. 2.0, 505 Rev. 2.0, 507 Rev. 2.0, 508 Rev. 3.0, 515.1 Rev. 4.0, 531.1 Rev. 3.0 found in ''Methods for the Determination of Organic Compounds in Drinking Water'', December 1988, revised July 1991; methods 506 Rev. 1.0 and 551 Rev. 1.0 found in ''Methods for the Determination of Organic Compounds in Drinking Water—Supplement I'', July 1990; methods 515.2 Rev. 1.0 and 524.2 Rev. 4.0 found in ''Methods for the Determination of Organic Compounds in Drinking Water—Supplement II,'' August 1992; and methods 504.1 Rev. 1.0, 508.1 Rev. 1.0, 525.2 Rev.1.0 available from US EPA NERL, Cincinnati, OH 45268.

Sources for obtaining copies of the approved versions of compliance methods are listed in the Addresses section at the beginning of this rule, in the References section below and at 40 CFR Parts 141 and 143. Users of the Internet can retrieve information about current EPA methods manuals under the EPA home page at the Internet address: http://www.epa.gov/nerlcwww/methmans.html. This site contains the titles, ordering information with publication numbers, abstracts, tables of contents, and analyte-method cross reference lists for EPA manuals that were published between 1988 and 1995. The cross reference lists are especially helpful because they match alphabetical lists of analytes with the corresponding method(s) of analysis.

C. Technical Corrections and Amendments

Today's action also makes corrections in method citations and minor changes to the regulations. The regulatory changes include corrections or clarification to current requirements for composition of Performance Evaluation (PE) samples, frequency of PE-analysis, sample collection, sample holding times, description of acid herbicides. These technical corrections and amendments are discussed in detail below.

SM 4110B

The citation for SM 4110B in the tables of methods listed at 40 CFR 141.23(k)(1) and 143.3(b) is incorrect for some contaminants. This approved method uses ion chromatography in a chemical suppression mode. In the 1994 methods rule (59 *FR* 62456), EPA inadvertently listed this method as 4110 for some contaminants. The 4110 designation may confuse some readers because it might imply approval of SM 4110C, which is also contained within the SM 4110 citation. EPA has never approved nor intended to approve SM 4110C, which uses ion chromatography in an electronic suppression mode. In today's rule, EPA is correcting all citations to be SM 4110B.

PE Sample Composition

In the future, EPA may elect to make performance evaluation (PE) samples more challenging and lower the costs of the PE program by not including all regulated contaminants in each PE study. This would mean that a laboratory could be required to report whether or not a contaminant was detected in the PE sample and correctly report the concentration of each contaminant that it did detect in the sample. Correct reporting of

concentrations is described and specified in regulations as being within certain ''acceptance limits'' around the true value. EPA would apply the acceptance limits specified in the regulations only if the contaminant has been added to the PE sample, i.e., these limits do not apply for concentrations of zero.

By today's action EPA amends the introduction to the tables of acceptance criteria in the regulations to clarify that EPA may include any number of contaminants in any PE sample. The regulations at § 141.23(k)(3), § 141.24(f)(17) and § 141.24(h)(19) are revised to change ''Achieve . . . results . . .'' to ''For each contaminant that has been included in the sample achieve . . . results . . .''. This amendment means, for example, that although the acceptance limit for nitrate is ±10% at ≥0.4 mg/L, the analyst would not need to achieve this acceptance limit if nitrate is not added to the PE sample and the true value is therefore zero.

Annual PE Requirement

In the State certification of laboratories to measure for a contaminant, EPA has long recommended that the laboratory analyze a PE sample within prescribed acceptance limits for that contaminant. EPA recommends an annual frequency for these tests in the *Manual for the Certification of Laboratories Analyzing Drinking Water* [EPA 1997], though the Agency has not specified a frequency requirement in the related drinking water regulations. All States that conduct laboratory certification programs currently require laboratories to pass these tests at least once a year. EPA believes an annual demonstration is an appropriate requirement. In today's rule, EPA amends the regulations to adopt the universal requirement for laboratories to successfully analyze a PE sample at least once each year. Though not specified in the regulation, the PE sample may be provided by EPA, the State or by a third party with the approval of the State or EPA.

EPA already proposed to include such a requirement in a previous notice at 62 FR 36100 (July 3, 1997). Commenters questioned why EPA proposed PE sample testing once a year, rather than twice a year consistent with proposals under consideration by the National Environmental Laboratory Accreditation Council (NELAC). Today's action and the NELAC proposals are not inconsistent because today's action establishes minimum standards; the NELAC standards would establish higher standards that would be voluntary. NELAC has been considering standards for accreditation of laboratories under the National Environmental Laboratory Accreditation Program (NELAP). NELAP accreditation is voluntary and intended to promote consistency between State accreditation standards for laboratories who operate in more than one State. While EPA encourages states to adopt the NELAC standards, such adoption would also be voluntary. Laboratories conducting analyses in multiple states may strive for compliance with the NELAC standards, such as two annual PE sample analyses. Not all laboratories, however, need to meet such a requirement. Therefore, today's action only requires laboratories to analyze a single PE sample once a year.

Composite Sample Follow-up Reporting Time

The regulations at 40 CFR 141.23(a)(4), 141.24(f)(14) and 141.24(h)(10) specify criteria for when an individual sample collected from a compositing point must be analyzed to confirm the results of the analysis of the composite sample. The confirmatory analysis may be conducted on either a duplicate sample (collected at each compositing point) or on follow-up samples collected later. EPA had intended to allow systems up to 14-days to collect, analyze and report the results of these samples provided the sample holding time is not exceeded. The wording in the regulations at 40 CFR 141.23(a)(4)(iii), 141.24(f)(14)(ii) and (h)(10)(ii), however, has caused confusion and hardship because some States have required some systems to report the results of the analysis of duplicate confirmatory samples within 14-days after the composite sample was collected rather than 14-days after the composite result is obtained. EPA is amending the regulations to clarify that the confirmatory analysis result may be reported up to 14-days after completing analysis of the composite sample, provided the holding time of the sample is not exceeded.

Sample Collection Procedures for Asbestos and Nitrate

The table at 40 CFR 141.23(k)(2) lists preservation procedures and holding times for several drinking water contaminants. In today's rule, EPA is correcting errors in the table for measurement of asbestos, nitrate and total nitrate (nitrate plus nitrite).

EPA is adding the 48 hour holding time and other instructions for collecting asbestos samples that were inadvertently omitted from the table. These instructions are in one asbestos compliance method (EPA Method 100.2) but not in the other asbestos compliance method. Today's rule changes the regulations to require that the preservation procedures and holding times specified in Method 100.2 apply to all compliance analyses of asbestos.

The regulations (40 CFR 141.23(k)(2)) incorrectly list ''nitrate'' as the analyte of concern in two types of samples: chlorinated drinking water and unchlorinated drinking water to which sulfuric acid (H_2SO_4) has been added as a preservative (see table 1). The correct analyte of concern in both cases is ''total nitrate.'' The preservation procedures and holding times for both entries are also incorrect. Today's rule combines the nitrate entries into one entry for total nitrate, adds an entry for nitrate-only determinations, and specifies correct preservation procedures and sample holding times for nitrate and total nitrate.

The corrected preservation procedures and holding time for nitrate-only and total nitrate determinations are listed below in table 2 and in the regulations of today's rule at 40 CFR 141.23(k)(2). Nitrate and nitrite samples may be held up to 48 hours if kept at 4°C or less. These criteria are identical to those specified for wastewater samples at 40 CFR 136.3(e) and in EPA Method 300.0, which is EPA's most recently developed compliance method for nitrate, nitrite and total nitrate. Total nitrate samples may be held up to 28 days if the sample is acidified. These criteria are identical to the criteria in Method 300.0 but differ from criteria specified in Table II at 40 CFR 136.3(e) in that acidified wastewater samples must be kept at 4°C or less. Because holding time data developed for the currently approved version of EPA Method 300.0 (Rev. 2.1, August 1993) showed acidified drinking water samples to be stable for 28-days when held at ambient temperature, EPA will no longer require chilling of acidified samples collected for determination of total nitrate (nitrate-nitrite) in drinking water. When it is determined that data developed with Method 300.0 on drinking water samples is applicable to samples with biological activity typical of wastewater samples, EPA may amend the wastewater regulations to remove the requirement to chill acidified samples.

Today's rule also adds a footnote to the table at 40 CFR 141.23(k)(2) to explain that analysis of samples disinfected with an oxidant (such as free chlorine, chlorine dioxide or ozone) or in acidified samples can only provide a total nitrate result (footnote 4 in table 2). Nitrate cannot be measured separately

from nitrite in these samples because the acid and most disinfectants will oxidize nitrite to nitrate. Nitrate may only be measured separate from nitrite in samples that have not been acidified and that have not been disinfected or only disinfected with a minimal oxidant, such as chloramine.

TABLE 1.—CURRENT PRESERVATION AND HOLDING TIMES AT 40 CFR 141.23(k)(2)

Contaminant	Preservative [1]	Container [2]	Time [3]
Asbestos	Cool, 4°C	P or G	
Nitrate:			
Chlorinated	Cool, 4°C	P or G	28 days.
Non-chlorinated	Conc H_2SO_4 to pH <2.	P or G	14 days.
Nitrite	Cool, 4°C	P or G	48 hours.

[1] P=plastic, hard or soft; G=glass, hard or soft.
[2] In all cases samples should be analyzed as soon after collection as possible.
[3] See method(s) for the information for preservation.

TABLE 2.—CORRECTED PRESERVATION AND HOLDING TIMES AT 40 CFR 141.23(k)(2)

Contaminant	Preservative[1]	Container[2]	Time[3]
Asbestos	4°C	P or G	48 hours.[6]
Nitrate[4]	4°C	P or G	48 hours.
Nitrate-Nitrite[5]	H_2SO_4	P or G	28 days.
Nitrite[4]	4°C	P or G	48 hours.

[1] When indicated, samples must be acidified at the time of collection to pH < 2 with concentrated acid. When chilling is indicated the sample must be shipped and stored at 4°C or less.
[2] P=plastic, hard or soft; G=glass, hard or soft.
[3] In all cases samples should be analyzed as soon after collection as possible. Follow additional (if any) information on preservation, containers or holding times that is specified in method.
[4] Nitrate may only be measured separate from nitrite in samples that have not been acidified and that have not been disinfected or only disinfected with a minimal oxidant, such as chloramine. Measurement of acidified samples or waters disinfected with free chlorine, chlorine dioxide or ozone provides a total nitrate (sum of nitrate plus nitrite) concentration.
[5] Nitrate-Nitrite refers to a measurement of total nitrate. Acidification is not required if total nitrate is determined within 48 hours in a sample held at 4°C or less. However, acidification is required if a sample is to be held for longer than 48 hours because the disinfectant residual may not be maintained.
[6] Instructions for containers, preservation procedures and holding times as specified in Method 100.2 must be adhered to for all compliance analyses including those conducted with Method 100.1.

Analysis of Acid Herbicides

The herbicide, 2,4-D, is applied as an ester form and not as the acid, 2,4-dichlorophenoxy acetic acid. The MCL for 2,4-D is listed in a table at 40 CFR 141.61(c) with the CAS number, 94–75–7. This CAS number is assigned to the ester, acid and salt forms of 2,4-D. To clarify what is being regulated and analyzed, today's rule changes the description of the contaminant in the table of approved methods at 40 CFR 141.24(e) from ''2,4-D'' to ''2,4-D as acid, salts and esters''. Today's rule also clarifies in the footnotes to this table that ''accurate determination of the chlorinated esters'' of 2,4-D and other regulated acid herbicides ''requires hydrolysis of the sample as described in Methods 515.1, 515.2 and 555.''

D. Recommendation for Additional Methods for Chloride and Sulfate

In view of the fact that National Secondary Drinking Water Regulations are not federally enforceable, EPA only recommends analytical methods for monitoring of secondary contaminants. These methods are recommended at 40 CFR 143.4(b). EPA is aware that some States exercise their prerogative to disallow use of any method that is not listed at 40 CFR 143.4(b). EPA is also aware that titrimetric methods for chloride and turbidimetric methods for sulfate monitoring are specified for wastewater monitoring at 40 CFR 136.3 but not for drinking water at 40 CFR 143.4(b). This discrepancy in approval can increase analytical costs by requiring a laboratory to set up and support different analytical methods for the same contaminant.

Because EPA seeks to eliminate unnecessary hardships, EPA reexamined the available methods for secondary monitoring of sulfate and chloride and compared them to those proposed (60 *FR* 53988, October 18, 1995) or approved at 40 CFR 136.3 (table 1B). Based on this evaluation, today's rule recommends additional methods for chloride and sulfate monitoring.

Today's rule recommends the silver nitrate titrimetric methods SM 4500–Cl–B and ASTM D 512–89B for secondary monitoring of chloride. EPA is not recommending any titrimetric methods for chloride that use mercuric nitrate for drinking water analysis because the method produces a mercury-containing waste that is considered ''hazardous'' under the Resource Conservation Recovery Act (RCRA). This action is consistent with EPA's proposal on July 25, 1995 to withdraw approval of mercuric nitrate methods for monitoring under RCRA (60 *FR* 37976).

Today's rule also recommends two turbidimetric methods, SM 4500–SO_4E and ASTM D516–90, for secondary monitoring of sulfate. Although the ASTM and Standard Method turbidimetric methods for sulfate are similar to EPA Method 375.4, EPA has not and will not recommend the EPA method because EPA Method 375.4 is outdated relative to D516–90 and SM4500–SO_4E. Although recommending turbidimetric methods for sulfate at § 143.4(b) results in approval of these methods for unregulated contaminant monitoring at § 141.40(n)(12), this does not require the Agency to adopt these methods in future rulemakings (if any) on sulfate.

E. Performance-based Measurement System

On October 6, 1997, EPA published a Notice of the Agency's intent to implement a Performance Based

Measurement System (PBMS) in all of its programs to the extent feasible (62 FR 52098). The Agency is currently determining the specific steps necessary to implement PBMS in its programs and preparing an implementation plan. Final decisions have not yet been made concerning the implementation of PBMS in water programs. However, EPA is currently evaluating what relevant performance characteristics should be specified for monitoring methods used in the water programs under a PBMS approach to ensure adequate data quality. EPA would then specify performance requirements in its regulations to ensure that any method used for determination of a regulated analyte is at least equivalent to the performance achieved by other currently approved methods. Our expectation is that EPA will publish its PBMS implementation strategy for water programs in the **Federal Register** by the end of calendar year 1998.

Once EPA has made its final determinations regarding implementation of PBMS in programs under the Safe Drinking Water Act, EPA would incorporate specific provisions of PBMS into its regulations, which may include specification of the performance characteristics for measurement of regulated contaminants in the drinking water program regulations.

IV. Regulation Assessment Requirements

A. Executive Order 12866

Under Executive Order 12866 (58 FR 51735; October 4, 1993), the Agency must determine whether the regulatory action is ''significant'' and therefore subject to OMB review and the requirements of the Executive Order. The Order defines ''significant regulatory action'' as one that is likely to result in a rule that may:

(1) Have an annual effect on the economy of $100 million or more, or adversely affect in a material way the economy, a sector of the economy, productivity, competition, jobs, the environment, public health or safety, or State, local, or tribal governments or communities;

(2) Create a serious inconsistency or otherwise interfere with an action taken or planned by another agency;

(3) Materially alter the budgetary impact of entitlements, grants, user fees, or loan programs or the rights and obligations of recipients thereof; or

(4) Raise novel legal or policy issues arising out of legal mandates, the President's priorities, or the principles set forth in the Executive Order.

It has been determined that this rule is not a ''significant regulatory action'' under the terms of Executive Order 12866 and is therefore not subject to OMB review.

B. Regulatory Flexibility Act

Under the Regulatory Flexibility Act (RFA), EPA generally is required to conduct a regulatory flexibility analysis describing the impact of the regulatory action on small entities as part of rulemaking. However, under section 605(b) of the RFA, if EPA certifies that the rule will not have a significant economic impact on a substantial number of small entities, EPA is not required to prepare a regulatory flexibility analysis. Pursuant to section 605(b) of the Regulatory Flexibility Act, 5 U.S.C. 605(b), the Administrator certifies that this rule will not have a significant economic impact on a substantial number of small entities.

The rule approves new versions of currently approved EPA Methods, ASTM Methods and Standard Methods for compliance with drinking water standards and monitoring requirements and is making minor technical corrections or amendments. Previous versions of these ASTM and Standard Methods will not be withdrawn, public water systems and laboratories performing analyses on behalf of these systems may continue to use them after the promulgation of today's rule. Previous versions of EPA Methods, however, will be withdrawn after 18 months, but this delayed effective date should provide ample time for the changeover. The incremental change in cost associated with the use of the new versions of EPA methods will be very minor because the new versions contain only technical enhancements and editorial improvements.

C. Unfunded Mandates Reform Act

Title II of the Unfunded Mandates Reform Act of 1995 (UMRA), Pub.L. 104–4, establishes requirements for Federal agencies to assess the effects of their regulatory actions on State, local, and tribal governments and the private sector. Under section 202 of the UMRA, EPA generally must prepare a written statement, including a cost-benefit analysis, for proposed and final rules with ''Federal mandates'' that may result in expenditures to State, local, and tribal governments, in the aggregate, or to the private sector, of $100 million or more in any one year. Before promulgating an EPA rule for which a written statement is needed, section 205 of the UMRA generally requires EPA to identify and consider a reasonable number of regulatory alternatives and adopt the least costly, most cost-effective or least burdensome alternative that achieves the objectives of the rule. The provisions of section 205 do not apply when they are inconsistent with applicable law. Moreover, section 205 allows EPA to adopt an alternative other than the least costly, most cost-effective or least burdensome alternative if the Administrator publishes with the final rule an explanation why that alternative was not adopted. Before EPA establishes any regulatory requirements that may significantly or uniquely affect small governments, including tribal governments, it must have developed under section 203 of the UMRA a small government agency plan. The plan must provide for notifying potentially affected small governments, enabling officials of affected small governments to have meaningful and timely input in the development of EPA regulatory proposals with significant Federal intergovernmental mandates, and informing, educating, and advising small governments on compliance with the regulatory requirements.

EPA has determined that this rule does not contain any Federal mandate that may result in expenditures of $100 million or more for State, local, and tribal governments, in the aggregate, or the private sector in any one year. Thus, today's rule is not subject to the requirements of section 202 and 205 of the UMRA. Today's rule approves use of additional analytical methods by laboratories conducting analysis for contaminants in drinking water and thus provides operational flexibility to laboratory analyst. Although, the rule withdraws earlier versions of some methods, and provides for amendments to change Performance Evaluation sample composition and requires yearly analysis of PE samples, EPA anticipates no increase in expenditure or burden on the testing laboratories, and thus, no increase in expenditure or burden on the laboratories' client public water systems. For example, the differences between the replacement methods and the withdrawn methods are very minor. In fact, the newer versions are easier to use. The cost of the PE program should decrease because the testing laboratories have to analyze for fewer analytes. Requiring PE sample analysis once a year will not adversely affect the testing laboratories because all states that conduct laboratory certification programs currently require yearly PE sample analysis.

In view of the fact that today's rule provides regulatory relief in the form of increased operational flexibility to laboratory analysts, and thus relief to laboratories' client public water

systems, EPA has determined that this rule contains no regulatory requirements that might significantly or uniquely affect small governments. Therefore, today's rule is not subject to section 203 of UMRA.

D. Paperwork Reduction Act

In accordance with the Paperwork Reduction Act of 1980, 44 U.S.C. 3501 *et seq.*, EPA must submit an information collection request covering information collection requirements in a rule to the Office of Management and Budget (OMB) for review and approval. This rule contains no collection requirements. Therefore, preparation of an information collection request to accompany this rule is unnecessary.

E. Science Advisory Board and National Drinking Water Advisory Council, and Secretary of Health and Human Services

In accordance with Section 1412 (d) and (e) of the SDWA, the Agency submitted this proposal to the Science Advisory Board, the National Drinking Water Advisory Council, and the Secretary of Health and Human Services for their review. They had no comments.

F. Submission to Congress and the General Accounting Office

The Congressional Review Act, 5 U.S.C. 801 *et seq.*, as added by the Small Business Regulatory Enforcement Fairness Act of 1996, generally provides that before rule may take effect, the agency promulgating the rule must submit a rule report, which includes a copy of the rule, to each House of the Congress and to the Comptroller General of the United States. EPA will submit a report containing this rule and other requirement information to the U.S. Senate, the U.S. House of Representatives, and the Comptroller General of the United States prior to publication of the rule in the **Federal Resigter**. This action is not a ''major rule'' as defined by 5 U.S.C. 804(2). This rule will be effective January 4, 1999.

G. National Technology Transfer and Advancement Act

Under section 12(d) of the National Technology Transfer and Advancement Act, the Agency is directed to use voluntary consensus standards in its regulatory activities unless to do so would be inconsistent with applicable law or otherwise impractical. Voluntary consensus standards are technical standards (e.g., material specifications, test methods, sampling procedures, business practices, etc.) that are developed or adopted by voluntary consensus standard bodies. Where available and potentially applicable voluntary consensus standards are not used by EPA, the Act requires the Agency to provide Congress, through the Office of Management and Budget (OMB), an explanation for the reasons for not using such standards.

In this rulemaking EPA is approving new versions of ASTM and Standard Methods for many regulated drinking water contaminants. ASTM and SM are both voluntary consensus standard bodies responsible for promoting adoption of uniform and efficient methods for analysis. EPA recognizes that other consensus methods may also be available for the contaminants covered by this rule. In order to expedite publication of this rule EPA has chosen not to perform an exhaustive search for other consensus methods at this time. EPA plans to address the availability of other voluntary consensus methods for these analytes in subsequent rules.

H. Executive Order 13045—Protection of Children From Environmental Health Risks and Safety Risks

Today's action is not subject to Executive Order 13045 [62 FR 19885 (April 23, 1997)], which requires agencies to identify and assess the environmental health and safety risks of their rules on children. Pursuant to the definitions in section 2–202, Executive Order 13045 only applies to rules that are economically significant as defined under Executive Order 12886 and concern an environmental health or safety risk that may disproportionately affect children. This rule is not economically significant and does not concern a risk disproportionately affecting children.

V. References

APHA 1992. Eighteenth edition of *Standard Methods for the Examination of Water and Wastewater,* 1992, American Public Health Association, 1015 Fifteenth Street NW, Washington, D.C. 20005.

APHA 1995. Nineteenth edition of *Standard Methods for the Examination of Water and Wastewater,* 1995, American Public Health Association, 1015 Fifteenth Street NW, Washington, D.C. 20005.

ASTM 1994. *Annual Book of ASTM Standards,* 1994, Vol. 11.01 and 11.02, American Society for Testing and Materials, 101 Barr Harbor Drive, West Conshohocken, PA 19428.

ASTM 1996. *Annual Book of ASTM Standards,* 1996, Vol. 11.01 and 11.02, American Society for Testing and Materials, 101 Barr Harbor Drive, West Conshohocken, PA 19428.

AWWA 1996. ''Standard Methods—A Closer Look'', Posavec, Steve, in *Opflow,* Vol. 22, No.2, February 1996, American Water Works Association, 6666 West Quincy Avenue, Denver, CO 80235.

EPA 1990a. ''Methods for the Determination of Organic Compounds in Drinking Water—Supplement I'', July 1990, NTIS PB91–146027.

EPA 1991. ''Methods for the Determination of Organic Compounds in Drinking Water'', December 1988, revised July 1991, NTIS PB91–231480.

EPA 1992. ''Methods for the Determination of Organic Compounds in Drinking Water—Supplement II,'' August 1992, NTIS PB92–207703.

EPA 1993. ''Methods for the Determination of Inorganic Substances in Environmental Samples'', August 1993, NTIS PB94–120821.

EPA 1994. ''Methods for the Determination of Metals in Environmental Samples—Supplement I'', May 1994, NTIS PB95–125472.

EPA 1994b. *Technical Notes on Drinking Water Methods,* EPA–600/R–94–173, October 1994, NTIS PB95–104766.

EPA 1995. ''Methods for the Determination of Organic Compounds in Drinking Water—Supplement III,'' EPA–600/R–95–131, August 1995, NTIS PB95–261616.

EPA 1997. *Manual for the Certification of Laboratories Analyzing Drinking Water,* Fourth Edition, Office of Water Resource Center (RC–4100), 401 M. Street SW, Washington, D.C. 20460, EPA 81–B–97–001, March 1997.

NY 1996. Suffolk County Water Authority 1996. Data Package pertaining to EPA Method 508.1 and the use of a NP detector. Suffolk County Water Authority Laboratory 260 Motor Parkway, P.O. Box 18043, Hauppauge, New York 11788–8843.

USGS 1989. Methods I–3720–85, I–3300–85, I–1030–85, I–1601–85, I–2598–85, I–1700–85 and I–2700-85 in *Techniques of Water Resources Investigations of the U.S. Geological Survey,* Book 5, Chapter A–1, 3rd ed., 1989, U.S. Geological Survey (USGS) Information Services, Box 25286, Federal Center, Denver, CO 80225–0425.

USGS 1993. Method I–2601–90 in *Methods of Analysis by the U.S. Geological Survey National Water Quality Laboratory—Determination of Inorganic and Organic Constituents in Water and Fluvial Sediments,* Open File Report 93–125, 1993, U.S. Geological Survey (USGS) Information Services, Box 25286, Federal Center, Denver, CO 80225–0425.

List of Subjects

40 CFR Part 141

Environmental protection, Analytical methods, Chemicals, Incorporation by reference, Indians-lands, Intergovernmental relations, Radiation protection, Reporting and recordkeeping requirements, Water supply.

40 CFR Part 143

Environmental protection, Analytical methods, Chemicals, Incorporation by reference, Indians-lands, Water supply.

Dated: July 23, 1998.

Carol M. Browner,

Administrator.

For the reasons set out in the preamble, parts 141 and 143 of title 40, Code of Federal Regulations, are amended as follows:

PART 141—NATIONAL PRIMARY DRINKING WATER REGULATIONS

1. The authority citation for part 141 continues to read as follows:

Authority: 42 U.S.C. 300g, 300g-1, 300g-2, 300g-3, 300g-4, 300g-5, 300g-6, 300j-4, and 300j-9.

2. Section 141.21 is amended by revising paragraph (f)(3), revising the next to last sentence of paragraph (f)(5), revising the second sentence of paragraph (f)(6)(i), revising the second sentence of paragraph (f)(6)(ii), and revising the second sentence of paragraph (f)(8) to read as follows:

§ 141.21 Coliform sampling.

* * * * *

(f) * * *

(3) Public water systems must conduct total coliform analyses in accordance with one of the analytical methods in the following table:

Organism	Methodology	Citation [1]
Total Coliforms: [2]	Total Coliform Fermentation Technique [3,4,5]	9221A, B.
	Total Coliform Membrane Filter Technique	9222A, B, C.
	Presence-Absence (P–A) Coliform Test [5,6]	9221D
	ONPG-MUG Test [7]	9223.
	Colisure Test [8].	

[1] Methods 9221A, B, 9222A,B,C, 9221D and 9223 are contained in *Standard Methods for the Examination of Water and Wastewater,* 18th edition, 1992 and 19th edition, 1995, American Public Health Association, 1015 Fifteenth Street NW, Washington, D.C. 20005; either edition may be used.

[2] The time from sample collection to initiation of analysis may not exceed 30 hours. Systems are encouraged but not required to hold samples below 10°C during transit.

[3] Lactose broth, as commercially available, may be used in lieu of lauryl tryptose broth, if the system conducts at least 25 parallel tests between this medium and lauryl tryptose broth using the water normally tested, and this comparison demonstrates that the false-positive rate and false-negative rate for total coliforms, using lactose broth, is less than 10 percent.

[4] If inverted tubes are used to detect gas production, the media should cover these tubes at least one-half to two-thirds after the sample is added.

[5] No requirement exists to run the completed phase on 10 percent of all total coliform-positive confirmed tubes.

[6] Six-times formulation strength may be used if the medium is filter-sterilized rather than autoclaved.

[7] The ONPG-MUG Test is also known as the Autoanalysis Colilert System. A source for this test is referenced at paragraph (f)(5)(iii) of this section.

[8] The Colisure Test must be incubated for 28 hours before examining the results. If an examination of the results at 28 hours is not convenient, then results may be examined at any time between 28 hours and 48 hours. A description of the Colisure Test may be obtained from the Millipore Corporation, Technical Services Department, 80 Ashby Road, Bedford, MA 01730. The toll-free phone number is (800) 645–5476.

* * * * *

(5) * * * The preparation of EC medium is described in Method 9221E (paragraph 1a) in *Standard Methods for the Examination of Water and Wastewater,* 18th edition, 1992 and in the 19th edition, 1995; either edition may be used. * * *

(6) * * *

(i) * * * EC medium is described in Method 9221E as referenced in paragraph (f)(5) of this section. * * *

(ii) * * * Nutrient Agar is described in Method 9221B (paragraph 3) in *Standard Methods for the Examination of Water and Wastewater,* 18th edition, 1992 and in the 19th edition, 1995; either edition may be used. * * *

* * * * *

(8) * * * Copies of the analytical methods cited in Standard Methods for the Examination of Water and Wastewater (18th and 19th editions) may be obtained from the American Public Health Association *et al.;* 1015 Fifteenth Street NW, Washington, D.C. 20005. * * *

* * * * *

3. Section 141.23 is amended by revising paragraphs (a)(4)(iii), (k)(2) including the table, (k)(3)(i), (k)(3)(ii) introductory text, and revising the table and footnotes in paragraph (k)(1) to read as follows:

§ 141.23 Inorganic chemical sampling and analytical requirements.

* * * * *

(a) * * *

(4) * * *

(iii) If duplicates of the original sample taken from each sampling point used in the composite sample are available, the system may use these instead of resampling. The duplicates must be analyzed and the results reported to the State within 14 days after completion of the composite analysis or before the holding time of the initial sample is exceeded whichever is sooner.

* * * * *

(k) * * *

(1) * * *

Contaminant	Methodology [13]	EPA	ASTM [3]	SM [4]	Other
Antimony	ICP-Mass Spectrometry	[2] 200.8			
	Hydride-Atomic Absorption		D–3697–92		
	Atomic Absorption; Platform	[2] 200.9			
	Atomic Absorption; Furnace			3113B	
Arsenic [14]	Inductively Coupled Plasma	[2] 200.7		3120B	
	ICP-Mass Spectrometry	[2] 200.8			
	Atomic Absorption; Platform	[2] 200.9			
	Atomic Absorption; Furnace		D–2972–93C	3113B	
	Hydride Atomic Absorption		D–2972–93B	3114B	
Asbestos	Transmission Electron Microscopy	[9] 100.1			
	Transmission Electron Microscopy	[10] 100.2			
Barium	Inductively Coupled Plasma	[2] 200.7		3120B	
	ICP-Mass Spectrometry	[2] 200.8			

Contaminant	Methodology [13]	EPA	ASTM [3]	SM [4]	Other
	Atomic Absorption; Direct	.....		3111D	
	Atomic Absorption; Furnace	.....		3113B	
Beryllium	Inductively Coupled Plasma	[2] 200.7		3120B	
	ICP-Mass Spectrometry	[2] 200.8			
	Atomic Absorption; Platform	[2] 200.9			
	Atomic Absorption; Furnace	.....	D–3645–93B	3113B	
Cadmium	Inductively Coupled Plasma	[2] 200.7			
	ICP-Mass Spectrometry	[2] 200.8			
	Atomic Absorption; Platform	[2] 200.9			
	Atomic Absorption; Furnace	.....		3113B	
Chromium	Inductively Coupled Plasma	[2] 200.7		3120B	
	ICP-Mass Spectrometry	[2] 200.8			
	Atomic Absorption; Platform	[2] 200.9			
	Atomic Absorption; Furnace	.....		3113B	
Cyanide	Manual Distillation followed by	.....	D2036–91A	4500-CN-C	
	Spectrophotometric, Amenable	.....	D2036–91B	4500CN-G	
	Spectrophotometric:				
	Manual	.....	D2036–91A	4500-CN-E	[5] I–3300–855
	Semi-automated	[6] 335.4			
	Selective Electrode	.....		4500CN-F	
Fluoride	Ion Chromatography	[6] 300.0	D4327–91	4110B	
	Manual Distill.; Color. SPADNS	.....		4500F-B,D	
	Manual Electrode	.....	D1179–93B	4500F-C	
	Automated Electrode	.....			[11] 380–75WE.
	Automated Alizarin	.....		4500F-E	[11] 129–71W.
Mercury	Manual, Cold Vapor	[2] 245.1	D3223–91	3112B	
	Automated, Cold Vapor	[1] 245.2			
	ICP-Mass Spectrometry	[2] 200.8			
Nickel	Inductively Coupled Plasma	[2] 200.7		3120B	
	ICP-Mass Spectrometry	[2] 200.8			
	Atomic Absorption; Platform	[2] 200.9			
	Atomic Absorption; Direct	.....		3111B	
	Atomic Absorption; Furnace	.....		3113B	
Nitrate	Ion Chromatography	[6] 300.0	D4327–91	4110B	[8] B–1011.
	Automated Cadmium Reduction	[6] 353.2	D3867–90A	4500-NO_3-F	
	Ion Selective Electrode	.....		4500-NO_3-D	[7] 601.
	Manual Cadmium Reduction	.....	D3867–90B	4500-NO_3-E	
Nitrite	Ion Chromatography	[6] 300.0	D4327–91	4110B	[8] B–1011.
	Automated Cadmium Reduction	[6] 353.2	D3867–90A	4500-NO_3-F	
	Manual Cadmium Reduction	.....	D3867–90B	4500-NO_3-E	
	Spectrophotometric	.....		4500-NO_3-B	
Selenium	Hydride-Atomic Absorption	.....	D3859–93A	3114B	
	ICP-Mass Spectrometry	[2] 200.8			
	Atomic Absorption; Platform	[2] 200.9			
	Atomic Absorption; Furnace	.....	D3859–93B	3113B	
Thallium	ICP-Mass Spectrometry	[2] 200.8			
	Atomic Absorption; Platform	[2] 200.9			
Lead	Atomic absorption; furnace	.....	D3559–95D	3113B	
	ICP-Mass spectrometry	[2] 200.8			
	Atomic absorption; platform	[2] 200.9			
Copper	Atomic absorption; furnace	.....	D1688–95C	3113B	
	Atomic absorption; direct aspiration	.....	D1688–95A	3111B	
	ICP	[2] 200.7		3120B	
	ICP—Mass spectrometry	[2] 200.8			
	Atomic absorption; platform	[2] 200.9			
pH	Electrometric	[1] 150.1	D1293–95	4500-H^+-B	
	.....	[1] 150.21			
Conductivity	Conductance	.....	D1125–95A	2510B	
Calcium	EDTA titrimetric	.....	D511–93A	3500-Ca-D	
	Atomic absorption; direct aspiration	.....	D511–93B	3111B	
	Inductively-coupled plasma	[2] 200.7		3120B	
Alkalinity	Titrimetric	.....	D1067–92B	2320B	
	Electrometric titration	.....			[5] I–1030–85.
Ortho-phosphate [12].	Colorimetric, automated, ascorbic acid	[6] 365.1		4500-P-F	
	Colorimetric, ascorbic acid, single reagent	.....	D515–88A	4500-P-E	
	Colorimetric, phosphomolybdate;	.....			[5] I–1601–8.
	automated-segmented flow;	.....			[5] I–2601–90.
	automated discrete	.....			[5] I–2598–85.
	Ion Chromatography	[5] 300.0	D4327–91	4110B	
Silica	Colorimetric, molybdate blue;	.....			
	automated-segmented flow	.....			[5] I–1700–85.
	Colorimetric	.....		D859–94	[5] I–2700–85.
	Molybdosilicate	.....		4500-Si-D	

Contaminant	Methodology [13]	EPA	ASTM [3]	SM [4]	Other
	Heteropoly blue			4500-Si-E	
	Automated method for molybdate-reactive silica			4500-Si-F	
	Inductively-coupled plasma	[2] 200.7		3120B	
Temperature	Thermometric			2550	
Sodium	Inductively-coupled plasma	[2] 200.7			
	Atomic Absorption; direct aspiration			3111B	

The procedures shall be done in accordance with the documents listed below. The incorporation by reference of the following documents was approved by the Director of the Federal Register in accordance with 5 U.S.C. 552(a) and 1 CFR part 51. Copies of the documents may be obtained from the sources listed below. Information regarding obtaining these documents can be obtained from the Safe Drinking Water Hotline at 800–426–4791. Documents may be inspected at EPA's Drinking Water Docket, 401 M Street, SW., Washington, DC 20460 (Telephone: 202–260–3027); or at the Office of Federal Register, 800 North Capitol Street, NW., Suite 700, Washington, DC.

[1] ''Methods for Chemical Analysis of Water and Wastes'', EPA–600/4–79–020, March 1983. Available at NTIS, PB84–128677.

[2] ''Methods for the Determination of Metals in Environmental Samples—Supplement I'', EPA–600/R–94–111, May 1994. Available at NTIS, PB 95–125472.

[3] *Annual Book of ASTM Standards,* 1994 and 1996, Vols. 11.01 and 11.02, American Society for Testing and Materials. The previous versions of D1688–95A, D1688–95C (copper), D3559–95D (lead), D1293–95 (pH), D1125–91A (conductivity) and D859–94 (silica) are also approved. These previous versions D1688–90A,C; D3559–90D, D1293–84, D1125–91A and D859–88, respectively are located in the *Annual Book of ASTM Standards,* 1994, Vols. 11.01. Copies may be obtained from the American Society for Testing and Materials, 101 Barr Harbor Drive, West Conshohocken, PA 19428.

[4] 18th and 19th editions of *Standard Methods for the Examination of Water and Wastewater,* 1992 and 1995, respectively, American Public Health Association; either edition may be used. Copies may be obtained from the American Public Health Association, 1015 Fifteenth Street NW, Washington, DC 20005.

[5] Method I–2601–90, *Methods for Analysis by the U.S. Geological Survey National Water Quality Laboratory—Determination of Inorganic and Organic Constituents in Water and Fluvial Sediments,* Open File Report 93–125, 1993; For all other Methods See *Techniques of Water Resources Investigation of the U.S. Geological Survey,* Book 5, Chapter A–1, 3rd ed., 1989, Methods I–1030; I–1601–85; I–1700–85; I–2598–85; I–2700–85; and I–3300–85; Available from Information Services, U.S. Geological Survey, Federal Center, Box 25286, Denver, CO 80225–0425.

[6] ''Methods for the Determination of Inorganic Substances in Environmental Samples'', EPA–600/R–93–100, August 1993. Available at NTIS, PB94–120821.

[7] The procedure shall be done in accordance with the Technical Bulletin 601 ''Standard Method of Test for Nitrate in Drinking Water'', July 1994, PN 221890–001, Analytical Technology, Inc. Copies may be obtained from ATI Orion, 529 Main Street, Boston, MA 02129.

[8] Method B–1011, ''Waters Test Method for Determination of Nitrite/Nitrate in Water Using Single Column Ion Chromatography August 1987''. Copies may be obtained from Waters Corporation, Technical Services Division, 34 Maple Street, Milford, MA 01757.

[9] Method 100.1, ''Analytical Method For Determination of Asbestos Fibers in Water'', EPA–600/4–83–043, EPA, September 1983. Available at NTIS, PB83–260471.

[10] Method 100.2, ''Determination Of Asbestos Structure Over 10-μm In Length In Drinking Water'', EPA–600/R–94–134, June 1994. Available at NTIS, PB84–201902.

[11] Industrial Method No. 129–71W, ''Fluoride in Water and Wastewater'', December 1972, and Method No. 380–75WE, ''Fluoride in Water and Wastewater'', February 1976, Technicon Industrial Systems. Copies may be obtained from Bran & Luebbe, 1025 Busch Parkway, Buffalo Grove, IL 60089.

[12] Unfiltered, no digestion or hydrolysis.

[13] Because MDLs reported in EPA Methods 200.7 and 200.9 were determined using a 2X preconcentration step during sample digestion, MDLs determined when samples are analyzed by direct analysis (i.e., no sample digestion) will be higher. For direct analysis of cadmium and arsenic by Method 200.7, and arsenic by Method 3120 sample preconcentration using pneumatic nebulization may be required to achieve lower detection limits. Preconcentration may also be required for direct analysis of antimony, lead, and thallium by Method 200.9; antimony and lead by Method 3113B; and lead by Method D3559–90D unless multiple in-furnace depositions are made.

[14] If ultrasonic nebulization is used in the determination of arsenic by Methods 200.7, 200.8, or SM 3120, the arsenic must be in the pentavalent state to provide uniform signal response. For methods 200.7 and 3120, both samples and standards must be diluted in the same mixed acid matrix concentration of nitric and hydrochloric acid with the addition of 100 μL of 30% hydrogen peroxide per 100ml of solution. For direct analysis of arsenic with method 200.8 using ultrasonic nebulization, samples and standards must contain one mg/L of sodium hypochlorite.

(2) Sample collection for antimony, asbestos, barium, beryllium, cadmium, chromium, cyanide, fluoride, mercury, nickel, nitrate, nitrite, selenium, and thallium under this section shall be conducted using the sample preservation, container, and maximum holding time procedures specified in the following table:

Contaminant	Preservative [1]	Container [2]	Time [3]
Antimony	HNO_3	P or G	6 months.
Asbestos	4°C	P or G	48 hours.[6]
Barium	HNO_3	P or G	6 months.
Beryllium	HNO_3	P or G	6 months.
Cadmium	HNO_3	P or G	6 months.
Chromium	HNO_3	P or G	6 months.
Cyanide	4°C, NaOH	P or G	14 days.
Fluoride	None	P or G	1 month.
Mercury	HNO_3	P or G	28 days.
Nickel	HNO_3	P or G	6 months.
Nitrate [4]	4°C	P or G	48 hours.
Nitrate-Nitrite [5]	H_2SO_4	P or G	28 days.
Nitrite [4]	4°C	P or G	48 hours.
Selenium	HNO_3	P or G	6 months.
Thallium	HNO_3	P or G	6 months.

[1] When indicated, samples must be acidified at the time of collection to pH < 2 with concentrated acid or adjusted with sodium hydroxide to pH > 12. When chilling is indicated the sample must be shipped and stored at 4°C or less.

[2] P=plastic, hard or soft; G=glass, hard or soft.

[3] In all cases samples should be analyzed as soon after collection as possible. Follow additional (if any) information on preservation, containers or holding times that is specified in method.

[4] Nitrate may only be measured separate from nitrite in samples that have not been acidified and that have not been disinfected or only disinfected with a minimal oxidant, such as chloramine. Measurement of acidified samples or waters disinfected with free chlorine, chlorine dioxide or ozone provides a total nitrate (sum of nitrate plus nitrite) concentration.

[5] Nitrate-Nitrite refers to a measurement of total nitrate. Acidification is not required if total nitrate is determined within 48 hours in a sample held at 4°C or less. However, acidification is required if a sample is to be held for longer than 48 hours because the disinfectant residual may not be maintained.

[6] Instructions for containers, preservation procedures and holding times as specified in Method 100.2 must be adhered to for all compliance analyses including those conducted with Method 100.1.

(3) * * *

(i) Analyze Performance Evaluation (PE) samples provided by EPA, the State or by a third party (with the approval of the State or EPA) at least once a year.

(ii) For each contaminant that has been included in the PE sample achieve quantitative results on the analyses that are within the following acceptance limits:

* * * * *

4. Section 141.24 is amended by revising paragraph (e), revising paragraphs (f)(14)(ii), (f)(17)(i)(A), (f)(17)(i)(B), (f)(17)(ii)(A), (h)(10)(ii), (h)(13) introductory text, (h)(13)(i), (h)(19)(i)(A) and (h)(19)(i)(B) introductory text to read as follows:

§ 141.24 Organic chemicals other than total trihalomethanes, sampling and analytical requirements.

* * * * *

(e) Analyses for the contaminants in this section shall be conducted using the following EPA methods or their equivalent as approved by EPA:

(1) The following documents are incorporated by reference. This incorporation by reference was approved by the Director of the Federal Register in accordance with 5 U.S.C. 552(a) and 1 CFR Part 51. Copies may be inspected at EPA's Drinking Water Docket, 401 M Street, SW, Washington, DC 20460; or at the Office of the Federal Register, 800 North Capitol Street, NW, Suite 700, Washington, DC. Method 508A is in *Methods for the Determination of Organic Compounds in Drinking Water*, EPA–600/4–88–039, December 1988, Revised, July 1991. Methods 547, 550 and 550.1 are in *Methods for the Determination of Organic Compounds in Drinking Water—Supplement I*, EPA–600–4–90–020, July 1990. Methods 548.1, 549.1, 552.1 and 555 are in *Methods for the Determination of Organic Compounds in Drinking Water—Supplement II*, EPA–600/R–92–129, August 1992. Methods 502.2, 504.1, 505, 506, 507, 508, 508.1, 515.1, 515.2, 524.2 525.2, 531.1, 551.1 and 552.2 are in *Methods for the Determination of Organic Compounds in Drinking Water—Supplement III*, EPA–600/R–95–131, August 1995. Method 1613 is titled ''Tetra-through Octa-Chlorinated Dioxins and Furans by Isotope-Dilution HRGC/HRMS'', EPA–821–B–94–005, October 1994. These documents are available from the National Technical Information Service, NTIS PB91–231480, PB91–146027, PB92–207703, PB95–261616 and PB95–104774, U.S. Department of Commerce, 5285 Port Royal Road, Springfield, Virginia 22161. The toll-free number is 800–553–6847. Method 6651 shall be followed in accordance with *Standard Methods for the Examination of Water and Wastewater*, 18th edition, 1992 and 19th edition, 1995, American Public Health Association (APHA); either edition may be used. Method 6610 shall be followed in accordance with the *Supplement to the 18th edition of Standard Methods for the Examination of Water and Wastewater*, 1994 or with the 19th edition of *Standard Methods for the Examination of Water and Wastewater*, 1995, APHA; either publication may be used. The APHA documents are available from APHA, 1015 Fifteenth Street NW, Washington, D.C. 20005. Other required analytical test procedures germane to the conduct of these analyses are contained in *Technical Notes on Drinking Water Methods*, EPA–600/R–94–173, October 1994, NTIS PB95–104766, as follows:

Contaminant	Method [1]
Benzene	502.2, 524.2.
Carbon tetrachloride	502.2, 524.2, 551.1.
Chlorobenzene	502.2, 524.2.
1,2-Dichlorobenzene	502.2, 524.2.
1,4-Dichlorobenzene	502.2, 524.2.
1,2-Dichloroethane	502.2, 524.2.
cis-Dichloroethylene	502.2, 524.2.
trans-Dichloroethylene	502.2, 524.2.
Dichloromethane	502.2, 524.2.
1,2-Dichloropropane	502.2, 524.2.
Ethylbenzene	502.2, 524.2.
Styrene	502.2, 524.2.
Tetrachloroethylene	502.2, 524.2, 551.1.
1,1,1-Trichloroethane	502.2, 524.2, 551.1.
Trichloroethylene	502.2, 524.2, 551.1.
Toluene	502.2, 524.2.
1,2,4-Trichlorobenzene	502.2, 524.2.
1,1-Dichloroethylene	502.2, 524.2.
1,1,2-Trichloroethane	502.2, 524.2, 551.1.
Vinyl chloride	502.2, 524.2.
Xylenes (total)	502.2, 524.2.
2,3,7,8-TCDD (dioxin)	1613.
2,4-D [4] (as acid, salts and esters)	515.2, 555, 515.1.
2,4,5-TP [4] (Silvex)	515.2, 555, 515.1.
Alachlor [2]	507, 525.2, 508.1, 505, 551.1.
Atrazine [2]	507, 525.2, 508.1, 505, 551.1.
Benzo (a) pyrene	525.2, 550, 550.1.
Carbofuran	531.1, 6610.
Chlordane	508, 525.2, 508.1, 505.
Dalapon	552.1, 515.1, 552.2.

Contaminant	Method [1]
Di(2-ethylhexyl)adipate	506, 525.2.
Di(2-ethylhexyl)phthalate	506, 525.2.
Dibromochloropropane (DBCP)	504.1, 551.1.
Dinoseb [4]	515.2, 555, 515.1.
Diquat	549.1.
Endothall	548.1.
Endrin	508, 525.2, 508.1, 505, 551.1.
Ethylene dibromide (EDB)	504.1, 551.1.
Glyphosate	547, 6651.
Heptachlor	508, 525.2, 508.1, 505, 551.1.
Heptachlor Epoxide	508, 525.2, 508.1, 505, 551.1.
Hexachlorobenzene	508, 525.2, 508.l, 505, 551.1.
Hexachlorocyclopentadiene	508, 525.2, 508.1, 505, 551.1.
Lindane	508, 525.2, 508.1, 505, 551.1.
Methoxychlor	508, 525.2, 508.1, 505, 551.1.
Oxamyl	531.1, 6610.
PCBs [3] (as decachlorobiphenyl)	508A.
(as Aroclors)	508.1, 508, 525.2, 505.
Pentachlorophenol	515.2, 525.2, 555, 515.1.
Picloram [4]	515.2, 555, 515.1.
Simazine [2]	507, 525.2, 508.1, 505, 551.1.
Toxaphene	508, 508.1, 525.2, 505.
Total Trihalomethanes	502.2, 524.2, 551.1.

[1] For previously approved EPA methods which remain available for compliance monitoring until March 3, 2000, see paragraph (e)(2) of this section.

[2] Substitution of the detector specified in Method 505, 507, 508 or 508.1 for the purpose of achieving lower detection limits is allowed as follows. Either an electron capture or nitrogen phosphorous detector may be used provided all regulatory requirements and quality control criteria are met.

[3] PCBs are qualitatively identified as aroclors and measured for compliance purposes as decachlorobiphenyl. Users of Method 505 may have more difficulty in achieving the required detection limits than users of Methods 508.1, 525.2 or 508.

[4] Accurate determination of the chlorinated esters requires hydrolysis of the sample as described in Methods 515.1, 515.2 and 555.

(2) The following EPA methods will remain available for compliance monitoring until March 3, 2000. The following documents are incorporated by reference. This incorporation by reference was approved by the Director of the Federal Register in accordance with 5 U.S.C. 552(a) and 1 CFR Part 51. Copies may be inspected at EPA's Drinking Water Docket, 401 M Street, SW, Washington, DC 20460; or at the Office of the Federal Register, 800 North Capitol Street, NW, Suite 700, Washington, DC. EPA methods 502.2 Rev. 2.0, 505 Rev. 2.0, 507 Rev. 2.0, 508 Rev. 3.0, 515.1 Rev. 4.0, 531.1 Rev. 3.0 are in ''Methods for the Determination of Organic Compounds in Drinking Water'', December 1988, revised July 1991; methods 506 and 551 are in ''Methods for the Determination of Organic Compounds in Drinking Water—Supplement I'', July 1990; methods 515.2 Rev. 1.0 and 524.2 Rev. 4.0 are in ''Methods for the Determination of Organic Compounds in Drinking Water—Supplement II,'' August 1992; and methods 504.1 Rev. 1.0, 508.1 Rev. 1.0, 525.2 Rev. 1.0 are available from US EPA NERL, Cincinnati, OH 45268, as follows:

Contaminant	Method [1]
Benzene	502.2, 524.2.
Carbon tetrachloride	502.2, 524.2, 551.
Chlorobenzene	502.2, 524.2.
1,2-Dichlorobenzene	502.2, 524.2.
1,4-Dichlorobenzene	502.2, 524.2.
1,2-Dichloroethane	502.2, 524.2.
cis-Dichloroethylene	502.2, 524.2.
trans-Dichloroethylene	502.2, 524.2.
Dichloromethane	502.2, 524.2.
1,2-Dichloropropane	502.2, 524.2.
Ethylbenzene	502.2, 524.2.
Styrene	502.2, 524.2.
Tetrachloroethylene	502.2, 524.2, 551.
1,1,1-Trichloroethane	502.2, 524.2, 551.
Trichloroethylene	502.2, 524.2, 551.
Toluene	502.2, 524.2.
1,2,4-Trichlorobenzene	502.2, 524.2.
1,1-Dichloroethylene	502.2, 524.2.
1,1,2-Trichloroethane	502.2, 524.2.
Vinyl chloride	502.2, 524.2.
Xylenes (total)	502.2, 524.2.
2,4-D [4] (as acid, salts and esters)	515.2.
2,4,5-TP [4] (Silvex)	515.2.
Alachlor [2]	507, 525.2, 508.1, 505.
Atrazine [2]	507, 525.2, 508.1, 505.
Benzo(a)pyrene	525.2.

Contaminant	Method [1]
Carbofuran	531.1.
Chlordane	508, 525.2, 508.1, 505.
Dalapon	515.1.
Di(2-ethylhexyl)adipate	506, 525.2.
Di(2-ethylhexyl)phthalate	506, 525.2.
Dibromochloropropane (DBCP)	504.1, 551.
Dinoseb [4]	515.2.
Endrin	508, 525.2, 508.1, 505.
Ethylene dibromide (EDB)	504.1, 551.
Heptachlor	508, 525.2, 508.1, 505.
Heptachlor Epoxide	508, 525.2, 508.1, 505.
Hexachlorobenzene	508, 525.2, 508.1, 505.
Hexachlorocyclopentadiene	508, 525.2, 508.1, 505.
Lindane	508, 525.2, 508.1, 505.
Methoxychlor	508, 525.2, 508.1, 505.
Oxamyl	531.1.
PCBs [3] (as Aroclors)	508.1, 508, 525.2, 505.
Pentachlorophenol	515.2, 525.2, 515.1.
Picloram [4]	515.2, 515.1.
Simazine [2]	507, 525.2, 508.1, 505.
Toxaphene	508, 508.1, 525.2, 505.
Total Trihalomethanes	502.2, 524.2, 551.

[1] [Reserved].

[2] Substitution of the detector specified in Method 505, 507, 508 or 508.1 for the purpose of achieving lower detection limits is allowed as follows. Either an electron capture or nitrogen phosphorous detector may be used provided all regulatory requirements and quality control criteria are met.

[3] PCBs are qualitatively identified as aroclors and measured for compliance purposes as decachlorobiphenyl. Users of Method 505 may have more difficulty in achieving the required detection limits than users of Methods 508.1, 525.2 or 508.

[4] Accurate determination of the chlorinated esters requires hydrolysis of the sample as described in Methods 515.1 and 515.2.

(f) * * *

(14) * * *

(ii) If duplicates of the original sample taken from each sampling point used in the composite sample are available, the system may use these instead of resampling. The duplicates must be analyzed and the results reported to the State within 14 days after completion of the composite analysis or before the holding time for the initial sample is exceeded whichever is sooner.

* * * * *

(17) * * *

(i) * * *

(A) Analyze Performance Evaluation (PE) samples provided by EPA, the State or by a third party (with the approval of the State or EPA) at least once a year.

(B) Achieve the quantitative acceptance limits under paragraphs (f)(17)(i)(C) and (D) of this section for at least 80 percent of the regulated organic contaminants included in the PE sample.

* * * * *

(ii) * * *

(A) Analyze Performance Evaluation samples provided by EPA, the State or by a third party (with the approval of the State or EPA) at least once a year.

* * * * *

(h) * * *

(10) * * *

(ii) If duplicates of the original sample taken from each sampling point used in the composite sample are available, the system may use these instead of resampling. The duplicates must be analyzed and the results reported to the State within 14 days after completion of the composite analysis or before the holding time for the initial sample is exceeded whichever is sooner.

* * * * *

(13) Analysis for PCBs shall be conducted as follows using the methods in paragraph (e) of this section:

(i) Each system which monitors for PCBs shall analyze each sample using either Method 508.1, 525.2, 508 or 505. Users of Method 505 may have more difficulty in achieving the required Aroclor detection limits than users of Methods 508.1, 525.2 or 508.

* * * * *

(19) * * *

(i) * * *

(A) Analyze Performance Evaluation (PE) samples provided by EPA, the State or by a third party (with the approval of the State or EPA) at least once a year.

(B) For each contaminant that has been included in the PE sample achieve quantitative results on the analyses that are within the following acceptance limits:

* * * * *

5. Section 141.40 is amended by revising paragraphs (g) and (n)(11) introductory text, and by revising the entries in the table for ''metolachlor'' and ''metribuzin'' in paragraph (n)(11) to read as follows:

§ 141.40 Special monitoring for inorganic and organic contaminants.

* * * * *

(g) Analysis for the unregulated contaminants listed under paragraphs (e) and (j) of this section shall be conducted using EPA Methods 502.2 or 524.2, or their equivalent as determined by EPA, except analysis for bromodichloromethane, bromoform, chlorodibromomethane and chloroform under paragraph (e) of this section also may be conducted by EPA Method 551.1, and analysis for 1,2,3-trichloropropane also may be conducted by EPA Method 504.1 or 551.1. A source for the EPA methods is referenced at § 141.24(e).

* * * * *

(n) * * *

(11) The following documents are incorporated by reference. This incorporation by reference was approved by the Director of the Federal Register in accordance with 5 U.S.C. 552(a) and 1 CFR Part 51. Copies may be inspected at EPA's Drinking Water Docket, 401 M Street, SW, Washington, DC 20460; or at the Office of the Federal Register, 800 North Capitol Street, N.W., Suite 700, Washington, DC. Systems shall monitor for the unregulated organic contaminants listed below, using the method(s) identified below and using the analytical test procedures contained in *Technical Notes on Drinking Water Methods*, EPA–600/R–94–173, October 1994, which is

available at NTIS, PB95–104766. Method 6610 shall be followed in accordance with the *Standard Methods for the Examination of Water and Wastewater 18th Edition Supplement,* 1994, American Public Health Association (APHA) or with the 19th edition of *Standard Methods for the Examination of Water and Wastewater,* 1995, APHA; either edition may be used. A source for APHA method 6610 and for EPA Methods 505, 507, 508, 508.1, 515.2, 525.2 and 531.1 is referenced at § 141.24(e).

Contaminants	Method
* * * * * * *	
Metolachlor	507, 525.2, 508.1, 551.1
Metribuzin	507, 525.2, 508.1, 551.1
* * * * * * *	

* * * * *

6. Section 141.74 is amended by revising the first five sentences of paragraph (a) introductory text, the table and footnotes in paragraph (a)(1), and the first and second sentences in paragraph (a)(2) to read as follows:

§ 141.74 Analytical and monitoring requirements.

(a) *Analytical requirements.* Only the analytical method(s) specified in this paragraph, or otherwise approved by EPA, may be used to demonstrate compliance with §§ 141.71, 141.72 and 141.73. Measurements for pH, turbidity, temperature and residual disinfectant concentrations must be conducted by a person approved by the State. Measurement for total coliforms, fecal coliforms and HPC must be conducted by a laboratory certified by the State or EPA to do such analysis. Until laboratory certification criteria are developed for the analysis of fecal coliforms and HPC, any laboratory certified for total coliforms analysis by the State or EPA is deemed certified for fecal coliforms and HPC analysis. The following procedures shall be conducted in accordance with the publications listed in the following section. * * *

(1) * * *

Organism	Methodology	Citation [1]
Total Coliforms [2]	Total Coliform Fermentation Technique [3,4,5]	9221A, B, C.
	Total Coliform Membrane Filter Technique	9222A, B, C.
	ONPG-MUG Test [6]	9223
Fecal Coliforms [2]	Fecal Coliform MPN Procedure [7]	9221E.
	Fecal Coliform Membrane Filter Procedure	9222D.
Heterotrophic bacteria [2]	Pour Plate Method	9215B.
Turbidity	Nephelometric Method	2130B.
	Nephelometric Method	180.1.[8]
	Great Lakes Instruments	Method 2.[9]

[1] Except where noted, all methods refer to *Standard Methods for the Examination of Water and Wastewater,* 18th edition, 1992 and 19th edition, 1995, American Public Health Association, 1015 Fifteenth Street NW, Washington, D.C. 20005; either edition may be used.
[2] The time from sample collection to initiation of analysis may not exceed 8 hours. Systems are encouraged but not required to hold samples below 10°C during transit.
[3] Lactose broth, as commercially available, may be used in lieu of lauryl tryptose broth, if the system conducts at least 25 parallel tests between this medium and lauryl tryptose broth using the water normally tested, and this comparison demonstrates that the false-positive rate and false-negative rate for total coliforms, using lactose broth, is less than 10 percent.
[4] Media should cover inverted tubes at least one-half to two-thirds after the sample is added.
[5] No requirement exists to run the completed phase on 10 percent of all total coliform-positive confirmed tubes.
[6] The ONPG-MUG Test is also known as the Autoanalysis Colilert System. A source for this test is referenced at § 141.21(f)(5)(iii).
[7] A–1 Broth may be held up to three months in a tightly closed screwcap tube at 4°C.
[8] ''Methods for the Determination of Inorganic Substances in Environmental Samples'', EPA–600/R–93–100, August 1993. Available at NTIS, PB94–121811.
[9] GLI Method 2, ''Turbidity'', November 2, 1992, Great Lakes Instruments, Inc., 8855 North 55th Street, Milwaukee, Wisconsin 53223.

(2) Public water systems must measure residual disinfectant concentrations with one of the analytical methods in the following table. The methods are contained in both the 18th and 19th editions of *Standard Methods for the Examination of Water and Wastewater,* 1992 and 1995; either edition may be used. * * *

* * * * *

7. Section 141.89 is amended by revising paragraph (a)(1)(i) and by removing the semicolon at the end of paragraph (a)(1)(ii)(B) and adding a period in its place to read as follows:

§ 141.89 Analytical methods.

(a) * * *

(1) * * *

(i) Analyze Performance Evaluation samples which include lead and copper provided by EPA, the State or by a third party (with the approval of the State or EPA) at least once a year.

* * * * *

PART 143—NATIONAL SECONDARY DRINKING WATER REGULATIONS

1. The authority citation for part 143 continues to read as follows:

Authority: 42 U.S.C. 300f *et seq.*

2. Section 143.4 is amended by revising the table and footnotes in paragraph (b) to read as follows:

§ 143.4 Monitoring.

* * * * *

(b) * * *

Contaminant	EPA	ASTM [3]	SM [4]	Other
Aluminum	[2] 200.7		3120B	

Contaminant	EPA	ASTM [3]	SM [4]	Other
	[2] 200.8		3113B	
	[2] 200.9		3111D	
Chloride	[1] 300.0	D4327–91	4110B	
	.....		4500–Cl–D	
	.....	D512–89B	4500–Cl–B	
Color	.....		2120B	
Foaming Agents	.....		5540C	
Iron	[2] 200.7		3120B	
	[2] 200.9		3111B	
	.....		3113B	
Manganese	[2] 200.7		3120B	
	[2] 200.8		3111B	
	[2] 200.9		3113B	
Odor	.....		2150B	
Silver	[2] 200.7		3120B	I–3720–85.[5]
	[2] 200.8		3111B	
	[2] 200.9		3113B	
Sulfate	[1] 300.0	D4327–91	4110B	
	[1] 375.2		4500–SO_4–F	
	.....		4500–SO_4–C,D	
	.....	D516–90	4500–SO_4–E	
TDS	.....		2540C	
Zinc	[2] 200.7		3120B	
	[2] 200.8		3111B	

The procedures shall be done in accordance with the documents listed below. The incorporation by reference of the following documents was approved by the Director of the FEDERAL REGISTER in accordance with 5 U.S.C. 552(a) and 1 CFR part 51. Copies of the documents may be obtained from the sources listed below. Information regarding obtaining these documents can be obtained from the Safe Drinking Water Hotline at 800–426–4791. Documents may be inspected at EPA's Drinking Water Docket, 401 M Street, SW, Washington, DC 20460 (Telephone: 202–260–3027); or at the Office of FEDERAL REGISTER, 800 North Capitol Street, NW, Suite 700, Washington, D.C. 20408.

[1] ''Methods for the Determination of Inorganic Substances in Environmental Samples'', EPA–600/R–93–100, August 1993. Available at NTIS, PB94–120821.

[2] ''Methods for the Determination of Metals in Environmental Samples—Supplement I'', EPA–600/R–94–111, May 1994. Available at NTIS, PB 95–125472.

[3] *Annual Book of ASTM Standards,* 1994 and 1996, Vols. 11.01 and 11.02, American Society for Testing and Materials. Copies may be obtained from the American Society for Testing and Materials, 101 Barr Harbor Drive, West Conshohocken, PA 19428.

[4] 18th and 19th editions of *Standard Methods for the Examination of Water and Wastewater,* 1992 and 1995, American Public Health Association; either edition may be used. Copies may be obtained from the American Public Health Association, 1015 Fifteenth Street NW, Washington, DC 20005.

[5] *Techniques of Water Resources Investigation of the U.S. Geological Survey,* Book 5, Chapter A–1, 3rd ed., 1989, Method I–3720–85; Available from Information Services, U.S. Geological Survey, Federal Center, Box 25286, Denver, CO 80225–0425.

[FR Doc. 98–22204 Filed 9–2–98; 8:45 am]

BILLING CODE 6560–50–U

ENVIRONMENTAL PROTECTION AGENCY

40 CFR Parts 141 and 143

[WH–FRL–6132–1]

RIN 2040–AC77

National Primary Drinking Water Regulations: Analytical Methods for Regulated Drinking Water Contaminants

AGENCY: Environmental Protection Agency.

ACTION: Proposed rule.

SUMMARY: Today, EPA is proposing to approve the use of updated versions of previously approved American Society for Testing and Materials (ASTM), Standard Methods for the Examination of Water and Wastewater (Standard Methods or SM) and Environmental Protection Agency (EPA) analytical methods for compliance determinations of chemical and microbiological contaminants in drinking water. At the same time, the Agency is withdrawing approval of the previous versions of the 14 EPA methods. Previous versions of the SM and ASTM methods will continue to be approved. In addition the Agency is making minor technical corrections or amendments in the inorganic, organic and total trihalomethane sampling and analytical requirements section in the Code of Federal Regulation. Elsewhere in this issue of the **Federal Register**, the Agency is promulgating this rule as a direct final rule because the Agency does not expect adverse comments and wants to allow immediate use of the methods for compliance monitoring. The Agency believes that it is in the public interest to make these methods available quickly by approving them via direct final rulemaking since the revised versions contain noncontroversial changes or optional improvements. EPA invites comment on the substance of the direct final rule (addressing the updated versions of previously approved ASTM, SM, and EPA analytical methods) in the ''final rules'' section of today's **Federal Register**.

When EPA issues a direct final rule making it also issues a companion proposed rule. The effective date on the final rule is set sufficiently in the future to allow for the receipt of and response to public comments before the direct final rule goes into effect. If EPA receives relevant adverse comments, then EPA will publish a timely withdrawal informing the public that the final rule will not take effect. EPA has chosen to use the direct final approach for these regulatory actions because the Agency does not expect to receive relevant adverse public comments. Additionally, the procedure allows for the most expeditious implementation possible consistent with the Administrative Procedure Act (APA). If EPA decides to withdraw any or all of the actions, EPA will proceed with a revised rule based on the companion proposed rule.

DATES: Comments must be received in writing by November 2, 1998.

ADDRESSES: Written comments may be submitted either by mail or electronically. Comments may be sent by mail to the W–97–04 Drinking Water Analytical Methods Final Comment Clerk, U.S. Environmental Protection Agency, Water Docket, MC 4101, 401 M Street, SW Washington, D.C. 20460. Please submit any references cited in your comments. EPA would appreciate an original and 3 copies of your comments and enclosures (including references).

No facsimiles (faxes) will be accepted because EPA cannot ensure that they will be submitted to the Water Docket. To ensure that EPA can read, understand and therefore properly respond to comments, the Agency would prefer that commenters cite, where possible, the paragraph(s) in the proposed regulation (e.g., 141.23(k)) to which each comment refers. Commenters should use a separate paragraph for each method or issue discussed. Commenters who would like acknowledgment of receipt of their comments should include a self-addressed, stamped envelope. For information on submitting comments electronically see **SUPPLEMENTARY INFORMATION.**

The record for this rulemaking has been established under docket number W–97–04. Copies of the public comments received, references cited in this notice and other supporting documents are available for review at the U.S. Environmental Protection Agency, Water Docket, East Tower Basement, 401 M Street, SW, Washington, D.C. 20460. For access to the docket materials, call 202–260–3027 on Monday through Friday, excluding Federal holidays, between 9:00 a.m. and 3:30 p.m. Eastern Time for an appointment.

FOR FURTHER INFORMATION CONTACT: Jitendra Saxena, Ph.D., Office of Ground Water and Drinking Water (MC–4607), U.S. Environmental Protection Agency, 401 M Street, SW, Washington, D.C. 20460, telephone (202) 260–9579; or one of the EPA Regional Office contacts listed below. General information may also be obtained from the EPA Drinking Water Hotline. Callers within the United States may reach the Safe Drinking Water Hotline at 800–426–4791. The Safe Drinking Water Hotline is open Monday through Friday, excluding Federal holidays, from 9:00 a.m. to 5:30 p.m. Eastern Time.

For technical information regarding microbiology methods, contact Paul S. Berger, Ph.D., Office of Ground Water and Drinking Water (MC–4607), U.S. Environmental Protection Agency, Washington, D.C. 20460, telephone, (202) 260–3039. For technical information regarding chemistry methods, contact Richard Reding, Ph.D., Office of Ground Water and Drinking Water, U.S. Environmental Protection Agency, Cincinnati, Ohio 45268, telephone (513) 569–7961.

SUPPLEMENTARY INFORMATION: See the information provided in the direct final action which is located in the rules section of this **Federal Register**.

Electronic Comment Submission

Electronic comments should be addressed to the Internet address: ow-docket@epamail.epa.gov. Electronic comments must be submitted as an ASCII file and avoid use of special characters and any form of encryption. Electronic comments must be identified by the docket number W–97–04. Comments and data will also be accepted on disks in WordPerfect in 5.1 format or ASCII file format. Electronic comments on this document may be filed online at many Federal Depository Libraries. Electronic comments will be transferred into a paper version for the official record. EPA will attempt to clarify electronic comments if there is an apparent error in transmission. Comments provided electronically will be considered timely if they are submitted electronically by 11:59 p.m. (Eastern time) on November 2, 1998.

Information on Internet Access

This **Federal Register** document is available on the Internet for public review and downloading at the following location: http://www.epa.gov/fedrgstr.

List of Subjects

40 CFR Part 141

Environmental protection, Analytical methods, Chemicals, Incorporation by reference, Indians—lands, Intergovernmental relations, Radiation protection, Reporting and recordkeeping requirements, Water supply.

40 CFR Part 143

Environmental protection, Analytical methods, Chemicals, Incorporation by

reference, Indians—lands, Water supply.

Dated: July 23, 1998.

Carol M. Browner,

Administrator.

[FR Doc. 98–22205 Filed 9–2–98; 8:45 am]

BILLING CODE 6560–50–U

federal register

Thursday
September 3, 1998

Part IV

Department of Labor

Mine Safety and Health Administration

30 CFR Parts 21, et al.

Improving and Eliminating Regulations; Flame Safety Lamps and Single-Shot Blasting Units; Final Rule

Improving and Eliminating Regulations; Lighting Equipment, Coal/Dust/ Rock Dust Analyzers, and Methane Detectors, Approved Books and Records, Calibration and Maintenance Procedures for Coal Mine Respirable Dust Samplers; Proposed Rules

DEPARTMENT OF LABOR

Mine Safety and Health Administration

30 CFR Parts 21, 24, and 75

RIN 1219–AA98

Improving and Eliminating Regulations; Flame Safety Lamps and Single-Shot Blasting Units

AGENCY: Mine Safety and Health Administration (MSHA), Labor.

ACTION: Final rule; technical amendments.

SUMMARY: MSHA is removing approval regulations for flame safety lamps and single-shot blasting units because advances in technology have made these devices obsolete and, thus, have made these regulations unnecessary. Removal of these parts will not reduce protection for miners. This final rule will also make conforming amendments to safety regulations for underground coal mines which require the use of this approved equipment.

EFFECTIVE DATE: November 2, 1998.

FOR FURTHER INFORMATION CONTACT: Patricia W. Silvey, Director; Office of Standards, Regulations, and Variances, MSHA; 703–235–1910.

SUPPLEMENTARY INFORMATION:

I. Rulemaking Background

In response to the Administration's regulatory reinvention initiative, MSHA conducted a review of its existing regulations to identify obsolete, outdated, redundant, or unnecessary provisions that could be removed or revised without reducing protection afforded miners. This final rule is part of MSHA's ongoing plan to improve its regulations. The removal of parts 21 and 24, from title 30 of the Code of Federal Regulations (30 CFR), will not reduce protection to miners. To increase awareness of this regulatory action, MSHA will mail a copy of this final rule to all mine operators and miners' representatives and will post it on MSHA's Website.

Even though 30 CFR 21 and 24 are being removed, flame safety lamps and single-shot blasting units approved by MSHA under these parts can continue to be manufactured and distributed for use in mines, as long as this is done in accordance with the drawings and specifications upon which the approval was based and there are no changes in the approved devices.

On August 30, 1996, the Agency published a proposed rule in the **Federal Register** [61 FR 45925] requesting public comment on its intention to remove 30 CFR 21 and 24 and make conforming amendments to 30 CFR 75. The Agency allowed 90 days for public comment and received no comments, no requests for an extension of the comment period, and no requests for a public hearing.

II. Discussion of Final Rule

A. 30 CFR 21—Flame Safety Lamps

Flame safety lamps are used to detect oxygen deficiency and methane in mine atmospheres. MSHA regulations in 30 CFR 21 repeat the requirements for approval of flame safety lamps from the former Bureau of Mines' Schedule 7C, dated August 30, 1935. Advances in technology have produced oxygen and methane detecting devices which are more accurate and reliable than flame safety lamps. As a result, methane and oxygen detectors have replaced flame safety lamps as the preferred instruments for detecting these gases in mines. In addition, 30 CFR 75.320 requires mine operators to use methane and oxygen detectors approved by MSHA to make these tests. A permissible flame safety lamp may continue to be used only as a supplemental testing device for oxygen deficiency. MSHA has not received a new application for approval of a flame safety lamp for more than 40 years.

B. 30 CFR 24—Single-Shot Blasting Units

Because of the danger of fire or explosion, only MSHA-approved blasting units can be used in underground mines that contain methane or flammable dust in dangerous concentrations. MSHA regulations in 30 CFR 24 repeat the requirements for approval of single-shot blasting units from the former Bureau of Mines' Schedule 12D, dated November 27, 1945. Advances in technology have produced multiple-shot blasting units which are safer, more versatile, and more reliable than single-shot blasting units. In addition, multiple-shot blasting units can be used to fire single shots. As a result, single-shot blasting units are rarely used in underground mines. MSHA has not received a new application for approval of a single-shot blasting unit for more than 25 years. The approval requirements for single-shot blasting units have been replaced by 30 CFR 7, subpart D, Multiple-Shot Blasting Units.

C. 30 CFR 75.506—Permissibility Requirements for Electric Face Equipment

The removal of parts 21 and 24 of 30 CFR requires conforming amendments to be made to § 75.506 of 30 CFR. Section 75.506 includes references to former parts of 30 CFR and to former Bureau of Mines' approval schedules contained in parts of 30 CFR being removed. With the removal of parts 21 and 24, these references are no longer necessary. The approval holder and MSHA have the specifications and drawings upon which the existing approval was based. For this reason, MSHA is removing the following references to former parts of 30 CFR and former Bureau of Mines' schedules from § 75.506(d)]:

Electric Cap Lamps, Bureau of Mines Schedules 6D, August 26, 1939 (Part 19);

Electric Mine Lamps, Other than Standard Cap Lamps, Bureau of Mines Schedule 10C, May 17, 1938 (Part 20);

Flame Safety Lamps, Bureau of Mines Schedule 7C, August 30, 1935 (Part 21);

Portable Methane Detectors, Bureau of Mines Schedule 8C, October 31, 1935 (Part 22);

Telephone and Signaling Devices, Bureau of Mines Schedule 9B, October 25, 1938 (Part 23);

Single Shot Blasting Units, Bureau of Mines Schedule 12D, November 27, 1945, (Part 24);

Multiple Shot Blasting Units, Bureau of Mines Schedule 16E, May 19, 1960 (Part 25);

Lighting Equipment for Illuminating Underground Workings, Bureau of Mines Schedule 29A, December 2, 1958 (Part 26); and

Methane-Monitoring Systems, Bureau of Mines Schedule 32A, July 27, 1966 (Part 27).

Electrical equipment approved by MSHA under these parts or former Bureau of Mines' approval schedules can continue to be manufactured and distributed for use in mines, as long as this is done in accordance with the drawings and specifications upon which the approval was based and there are no changes in the approved devices. This final rule will retain the list of equipment that will be considered permissible electric face equipment if it has been approved by MSHA.

III. Executive Order 12866 and Regulatory Flexibility Act

Executive Order 12866 requires that regulatory agencies assess both the costs and benefits of regulations. MSHA has determined that this final rule does not meet the criteria for a significant regulatory action and, therefore, has not prepared a separate analysis of costs and benefits. The analysis contained in this preamble meets MSHA's obligations under E.O. 12866 and the Regulatory Flexibility Act.

The Regulatory Flexibility Act (RFA) requires regulatory agencies to consider a rule's impact on small entities. The RFA requires that MSHA use the Small Business Administration (SBA) definition for a small mine of 500 or fewer employees or, after consultation with the SBA Office of Advocacy, establish an alternative definition for the mining industry by publishing that definition in the **Federal Register** for notice and comment. MSHA traditionally has considered small mines to be those with fewer than 20 employees and has analyzed the impact of the final rule on mines with 500 or fewer employees and on those with fewer than 20 employees.

Regulatory Flexibility Certification

In accordance with § 605 of the RFA, MSHA certifies that this final rule will not have a significant economic impact on a substantial number of small entities. No small governmental jurisdictions or nonprofit organizations are affected.

Under the Small Business Regulatory Enforcement Fairness Act (SBREFA) amendments to the RFA, MSHA must include in the final rule a factual basis for this certification. The Agency also must publish the regulatory flexibility certification in the **Federal Register**, along with its factual basis. The Agency believes that this analysis provides a reasonable basis for the certification in this case.

The Agency has provided a copy of this final rule and regulatory flexibility certification statement to the SBA Office of Advocacy. In addition, MSHA will mail a copy of the final rule, including the preamble and regulatory flexibility certification statement, to all affected mines and miners' representatives.

Factual Basis for Certification

MSHA used a qualitative approach in concluding that the final rule will not have a significant economic impact on a substantial number of small entities. This final rule removes approval regulations for obsolete equipment. The benefit of removing obsolete provisions is that MSHA regulations will be more concise, clearer, easier to use, and reflect advances in technology. This final rule will have no economic impact on the mining industry.

V. Paperwork Reduction Act

This final rule contains no information collection requirements subject to the Paperwork Reduction Act of 1995.

VI. Unfunded Mandates Reform Act

For purposes of the Unfunded Mandates Reform Act of 1995, as well as Executive Order 12875, this final rule does not include any Federal mandate that may result in increased expenditures by State, local, and tribal governments, or by the private sector.

VII. Executive Order 13045

In accordance with Executive Order 13045, Protection of Children from Environmental Health Risks and Safety Risks, MSHA has evaluated the environmental health and safety risks of the final rule on children. The Agency has determined that the final rule will have no effect on children.

List of Subjects

30 CFR Part 21

Mine safety and health.

30 CFR Part 24

Explosives, Mine safety and health.

30 CFR Part 75 Mine safety and health, Underground mining.

Dated: August 24, 1998.

J. Davitt McAteer,

Assistant Secretary for Mine Safety and Health.

Accordingly, under the authority of 30 U.S.C. 957 and 961, and for the reasons set out in the preamble, chapter I, title 30 of the Code of Federal Regulations is amended as follows:

PART 21—[REMOVED]

1. Part 21 is removed.

PART 24—[REMOVED]

2. Part 24 is removed.

PART 75—MANDATORY SAFETY STANDARDS—UNDERGROUND COAL MINES

3. The authority citation for part 75 continues to read as follows:

Authority: 30 U.S.C. 811.

4. Section 75.506 is amended by revising paragraph (d) to read as follows:

§ 75.506 Electric face equipment; requirements for permissibility.

* * * * *

(d) The following equipment will be permissible electric face equipment only if it is approved under the appropriate parts of this chapter, or former Bureau of Mines' approval schedules, and it is in permissible condition:

(1) Multiple-Shot Blasting Units, part 7 subpart D;

(2) Electric Cap Lamps, part 19;

(3) Electric Mine Lamps Other than Standard Cap Lamps, part 20;

(4) Flame Safety Lamps;

(5) Portable Methane Detectors, part 22;

(6) Telephone and Signaling Devices, part 23;

(7) Single-Shot Blasting Units;

(8) Lighting Equipment for Illuminating Underground Workings, part 26; and

(9) Methane-Monitoring Systems, part 27.

[FR Doc. 98–23347 Filed 9–2–98; 8:45 am]

BILLING CODE 4510–43–P

DEPARTMENT OF LABOR

Mine Safety and Health Administration

30 CFR Parts 26, 29, 57, and 75

RIN 1219–AA98

Improving and Eliminating Regulations; Lighting Equipment, Coal Dust/Rock Dust Analyzers, and Methane Detectors

AGENCY: Mine Safety and Health Administration (MSHA), Labor.

ACTION: Proposed rule; technical amendments.

SUMMARY: MSHA is proposing to remove approval regulations for lighting equipment for illuminating underground workings; portable coal dust/rock dust analyzers; and continuous duty, warning light, portable methane detectors. These regulations are unnecessary because they address equipment that can be addressed by other MSHA regulations. Removal of these parts would not reduce protection for miners. This proposal would also make conforming amendments to safety regulations that require the use of this approved equipment in underground coal mines and in gassy underground metal and nonmetal mines.

DATES: Submit written comments on or before November 2, 1998.

ADDRESSES: Send comments by mail to Patricia W. Silvey, Director, Office of Standards, Regulations, and Variances, MSHA, 4015 Wilson Boulevard, Room 631, Arlington, VA 22203; by facsimile to MSHA, Office of Standards, Regulations, and Variances at 703–235–5551; or by E-mail to comments@msha.gov. MSHA encourages commenters sending written comments by mail or facsimile to also send a computer disk of the comments.

FOR FURTHER INFORMATION CONTACT: Patricia W. Silvey, Director; Office of Standards, Regulations, and Variances, MSHA; 703–235–1910.

SUPPLEMENTARY INFORMATION:

I. Regulatory Background

In response to the Administration's regulatory reinvention initiative, MSHA conducted a review of its existing regulations to identify obsolete, outdated, redundant, or unnecessary provisions that could be removed or revised without reducing protection afforded miners. This proposed rule is part of MSHA's ongoing plan to improve its regulations. The removal of parts 26 and 29, from title 30 of the Code of Federal Regulations (30 CFR), would not reduce protection to miners. These provisions are covered by other MSHA regulations. Conforming amendments to other 30 CFR parts would be made, as appropriate.

To increase awareness of this regulatory action, MSHA will mail a copy of this proposed rule to all mine operators and miners' representatives and post it on MSHA's Website.

II. Discussion of Proposed Rule

A. 30 CFR 26—Lighting Equipment for Illuminating Underground Workings

In 1958, MSHA developed the regulations in 30 CFR 26 to establish specifications for the approval of mine lighting systems that are used independently, i.e., not connected to an approved machine. These specifications contain permissibility requirements to ensure that the electric system and components do not pose an explosion hazard, and design requirements to address the adequacy of the light intensity. MSHA has received only one application for approval of mine lighting systems under 30 CFR 26 since 1978.

Even though MSHA is proposing to remove 30 CFR 26, lighting systems approved under this part could continue to be manufactured and distributed for use in mines, as long as this was done in accordance with the drawings and specifications upon which the approval was based and there were no changes in the approved systems. No changes in approved systems could be made under 30 CFR 26 once it was deleted. Any future changes to lighting systems approved under 30 CFR 26 would require a new application for approval under 30 CFR 18.

Currently, approvals of lighting systems which are used independently, as well as those which are part of MSHA-approved equipment, can be requested under the requirements of 30 CFR 18, Electric Motor Driven Mine Equipment and Accessories. The general requirement in 30 CFR 18, subpart A; certain design and construction requirements in subpart B (i.e. §§ 18.20, 18.23, 18.24, 18.25, 18.30 18.35, 18.41, 18.48, 18.50, and 18.51); and certain inspections and tests in subpart C (i.e. §§ 18.62, 18.66, 19.67, and 18.68), as well as any other provisions necessary to address the design and performance of the systems, are applicable to the approval of independent mine lighting systems. For example, an evaluation for intrinsic safety under 30 CFR 18 includes a ''Lamp Bulb Breakage'' test which consists of breaking the bulb in the presence of an explosive mixture of methane-in-air. In addition to the permissibility and intrinsic safety requirements in 30 CFR 18, provisions in 30 CFR 75.1719–1 through 75.1719–3 contain voltage limitations, specify the amount of light required in mine workings, and address other safety requirements applicable to mine lighting systems.

For these reasons, MSHA believes that the approval regulations in 30 CFR 26 are redundant and is proposing to remove them.

B. 30 CFR 29–Portable Coal Dust/Rock Dust Analyzers, and Continuous Duty, Warning Light, Portable Methane Detectors for Use in Coal Mines

MSHA originally developed the regulations in 30 CFR 29 in the early 1970's to provide performance requirements for the approval of portable coal dust/rock dust analyzers for use in measuring the incombustible content of mine dusts; and for the approval of continuous duty, warning light, portable methane detectors for use in providing a visual signal of the presence of methane. At that time, MSHA anticipated that there would be a need for the approval of these types of instruments. MSHA has now determined, however, that the approval requirements in 30 CFR 29 for both portable coal dust/rock dust analyzers and continuous duty, warning light, portable methane detectors are unnecessary and is proposing to remove this part.

Even though MSHA is proposing to remove 30 CFR 29, portable coal dust/rock dust analyzers and continuous duty, warning light, portable methane detectors approved under this part could continue to be manufactured and distributed for use in mines, as long as this was done in accordance with the drawings and specifications upon which the approval was based and there were no changes in the approved devices. No changes in these approved devices could be made under 30 CFR 29 once it was deleted. Any future changes to such devices approved under 30 CFR 29 would require a new application for approval under 30 CFR 18 or 22, as discussed below.

Portable coal dust/rock dust analyzers. MSHA has never issued an approval for a portable coal dust/rock dust analyzer under 30 CFR 29. An experimental approval was granted in the late 1980's; however, the project was never completed. Furthermore, the performance requirements in 30 CFR 29 for portable coal dust/rock dust analyzers are now outdated. MSHA believes that 30 CFR 29 is no longer necessary or viable for approval of a portable coal dust/rock dust analyzer because there has been negligible

interest in approval of such an instrument, and the performance requirements are outdated. The elimination of 30 CFR 29, therefore, would not reduce protection afforded miners by the existing standards.

Although no such request is anticipated, should portable coal dust/rock dust analyzers be developed in the future, they could be approved under 30 CFR 18, Electric Motor Driven Mine Equipment and Accessories. Approvals are routinely issued under 30 CFR 18 for instruments that are not required by regulation, but are being used in underground mines, provided that they meet the requirements for intrinsic safety in 30 CFR 18.68 and are determined to be safe for their intended use as required by 30 CFR 18.20(b). In addition, the general requirements in 30 CFR 18, subpart A, as well as any other provisions necessary to address the design and performance of the instrument, are appropriate for the approval of portable coal dust/rock dust analyzers.

Continuous duty, warning light, portable methane detectors. MSHA has not issued a new approval for a continuous duty, warning light, portable methane detector under 30 CFR 29 since 1981. When 30 CFR 29 was developed, portable methane detectors approved under 30 CFR 22 did not have continuous monitoring, nor warning or alarm capability. Since 1981, however, advancements in technology have resulted in instruments that are suitable for approval both as portable methane detectors under 30 CFR 22 and which also have the capability to be used for continuous personal monitoring and warning or alarm. Portable methane detectors in use in mines now routinely have the capabilities specified in 30 CFR 29, and MSHA has approved them for the past 16 years under 30 CFR 22, Portable Methane Detectors.

If MSHA were to receive a new request under 30 CFR 29 for approval of a methane detector that is portable, operates continuously, and provides a warning to the user, the Agency could conduct an equivalent evaluation of the instrument using the approval requirements in 30 CFR 22. For these reasons, MSHA believes that 30 CFR 29 is unnecessary and that its removal would not reduce protection afforded miners by the existing standards.

III. Executive Order 12866

Executive Order 12866 requires that regulatory agencies assess both the costs and benefits of regulations. MSHA has determined that this proposed rule does not meet the criteria for a significant regulatory action and, therefore, has not prepared a separate analysis of costs and benefits. The analysis contained in this preamble meets MSHA's responsibilities under Executive Order 12866 and the Regulatory Flexibility Act.

IV. Regulatory Flexibility Act

The Regulatory Flexibility Act (RFA) requires regulatory agencies to consider a rule's impact on small entities. Under the RFA, MSHA must use the Small Business Administration (SBA) definition for a small mine of 500 or fewer employees or, after consultation with the SBA Office of Advocacy, establish an alternative definition for the mining industry by publishing that definition in the **Federal Register** for notice and comment. Although MSHA traditionally has considered small mines to be those with fewer than 20 employees, MSHA has analyzed the impact of the proposed rule on mines with 500 or fewer employees for the purposes of the RFA.

Regulatory Flexibility Certification

In accordance with § 605 of the RFA, MSHA certifies that this proposed rule would not have a significant economic impact on a substantial number of small entities. No small governmental jurisdictions or nonprofit organizations are affected.

Under the Small Business Regulatory Enforcement Fairness Act (SBREFA) amendments to the RFA, MSHA must include in the proposed rule a factual basis for this certification. The Agency also must publish the regulatory flexibility certification in the **Federal Register**, along with its factual basis. The Agency believes that this analysis provides a reasonable basis for the certification in this case.

The Agency has provided a copy of this proposed rule and regulatory flexibility certification statement to the SBA Office of Advocacy.

Factual Basis for Certification

MSHA used a qualitative approach in concluding that the proposed rule would not have a significant economic impact on a substantial number of small entities. This proposed rule removes approval regulations for equipment that can be approved under other existing MSHA regulations. The benefit of removing redundant provisions is that MSHA regulations would be more concise, clearer, easier to use, and reflect advances in technology. This proposed rule would have no economic impact on the mining industry.

V. Paperwork Reduction Act

This proposed rule contains no information collection requirements subject to the Paperwork Reduction Act of 1995.

VI. Unfunded Mandates Reform Act

For purposes of the Unfunded Mandates Reform Act of 1995, as well as Executive Order 12875, this proposed rule does not include any Federal mandate that may result in increased expenditures by State, local, and tribal governments, or by the private sector.

VII. Executive Order 13045

In accordance with Executive Order 13045, Protection of Children from Environmental Health Risks and Safety Risks, MSHA has evaluated the environmental health and safety risks of the proposed rule on children. The Agency has determined that the proposed rule would have no effect on children.

List of Subjects

30 CFR parts 26 and 29

Mine safety and health.

30 CFR parts 57 and 75

Mine safety and health, Underground mining.

Dated: August 24, 1998.

J. Davitt McAteer,

Assistant Secretary for Mine Safety and Health.

Accordingly, under the authority of 30 U.S.C. 957 and 961 and for the reasons set out in the preamble, MSHA proposes to amend chapter I, title 30 of the Code of Federal Regulations as follows:

PART 26—LIGHTING EQUIPMENT FOR ILLUMINATING UNDERGROUND WORKINGS

1. Part 26 is removed.

PART 29—PORTABLE COAL DUST/ROCK DUST ANALYZERS, AND CONTINUOUS DUTY, WARNING LIGHT, PORTABLE METHANE DETECTORS FOR USE IN COAL MINES

2. Part 29 is removed.

PART 57—SAFETY AND HEALTH STANDARDS—UNDERGROUND METAL AND NONMETAL MINES

3. The authority citation for part 57 continues to read as follows:

Authority: 30 U.S.C. 811.

4. Section 57.22303 is revised to read as follows:

§ 57.22303 Approved equipment (I-C mines).

Only electric equipment that is approved by MSHA under the

applicable requirements of 30 CFR parts 18 through 28 shall be used underground, except for submersible sump pumps.

PART 75—MANDATORY SAFETY STANDARDS—UNDERGROUND COAL MINES

5. The authority citation for part 75 continues to read as follows:

Authority: 30 U.S.C. 811.

6. Section 75.506 is amended by revising paragraph (d) to read as follows:

§ 75.506 Electric face equipment; requirements for permissibility.

* * * * *

(d) The following equipment will be permissible electric face equipment only if it is approved under the appropriate parts of this chapter, or former Bureau of Mines' approval schedules, and it is in permissible condition:

(1) Multiple-Shot Blasting Units, part 7, subpart D;

(2) Electric Cap Lamps, part 19;

(3) Electric Mine Lamps Other than Standard Cap Lamps, part 20;

(4) Flame Safety Lamps;

(5) Portable Methane Detectors, part 22;

(6) Telephone and Signaling Devices, part 23;

(7) Single-Shot Blasting Units;

(8) Lighting Equipment for Illuminating Underground Workings; and

(9) Methane-Monitoring Systems, part 27.

[FR Doc. 98–23349 Filed 9–2–98; 8:45 am]

BILLING CODE 4510–43–P

DEPARTMENT OF LABOR

Mine Safety and Health Administration

30 CFR Part 75

RIN 1219–AA98

Improving and Eliminating Regulations; Approved Books and Records

AGENCY: Mine Safety and Health Administration (MSHA), Labor.

ACTION: Proposed rule; technical amendment.

SUMMARY: MSHA is proposing to remove certain regulations on Approved Books and Records. Forms required by these regulations are obsolete. In addition, the requirements are either redundant or can be easily included in other existing standards for greater clarity. MSHA would make conforming amendments to other safety regulations, as necessary.

DATES: Submit written comments on or before November 2, 1998.

ADDRESSES: Send comments by mail to Patricia W. Silvey, Director, Office of Standards, Regulations, and Variances, MSHA, 4015 Wilson Boulevard, Room 631, Arlington, VA 22203; by facsimile to MSHA, Office of Standards, Regulations, and Variances at 703–235–5551; or by E-mail to comments@msha.gov. MSHA encourages commenters sending written comments by mail or facsimile to also send a computer disk of the comments.

FOR FURTHER INFORMATION CONTACT: Patricia W. Silvey, Director, Office of Standards, Regulations, and Variances: 703–235–1910.

SUPPLEMENTARY INFORMATION:

I. Rulemaking Background

In response to the Administration's regulatory reinvention initiative, MSHA conducted a review of its existing regulations to identify obsolete, outdated, redundant, or unnecessary provisions that could be removed or revised without reducing protection afforded miners. This proposed rule is part of MSHA's ongoing plan to improve its regulations. The removal of part 75, subpart S, from title 30 of the Code of Federal Regulations (30 CFR), would not reduce protection to miners because these provisions are covered by other MSHA standards. Conforming amendments to these other MSHA standards would be made, as appropriate. This proposed rule would streamline 30 CFR 75 by improving consistency and clarity in MSHA requirements for approved books and records for underground coal mines.

II. Discussion of Proposed Rule

Existing MSHA standards in 30 CFR 75, subpart S, Approved Books and Records, contains recordkeeping requirements for certain tests and examinations conducted in underground mines. Approved books for recording test results are specified, as well as the manner in which the books are to be maintained.

Existing 30 CFR 75.1800(b) specifies approved forms on which mine operators are to record results for provisions in 30 CFR 75.1801 through 75.1808. Of these, however, only 30 CFR 75.1806 and 75.1808 remain in 30 CFR 75, subpart S. In addition, all the forms listed are obsolete and are no longer in use.

Existing 30 CFR 75.1800(c) allows mine operators to use record books kept to comply with State requirements, in lieu of the books required in 30 CFR 75, subpart S, if the MSHA district manager determines that those books provide the information specified in any record book required by the MSHA regulation.

The only records specified in 30 CFR 75, subpart S, are those in 30 CFR 75.1806 which require that the results of monthly examinations of high voltage circuit breakers, required by 30 CFR 75.800–3 and 75.800–4, be recorded in a book entitled ''Monthly Examinations of Surface High Voltage Circuit Breakers'', Form 6–1293. This form is no longer in use and MSHA no longer approves record books.

Existing 30 CFR 75.1808 requires that all approved books and records maintained under the provisions of 30 CFR 75.1801 through 75.1807 be stored in a fireproof repository on the surface of the mine, in a location chosen by the mine operator, and be made available to interested persons. This provision now applies only to 30 CFR 75.1806. To be consistent with other MSHA recordkeeping requirements, and to accommodate the electronic storage of data, MSHA proposes to delete this requirement.

The proposal recognizes the increasing use of electronic storage and retrieval of information and would revise 30 CFR 75.800–4 to accommodate this technology. MSHA encourages mine operators who store records electronically to provide a mechanism which will allow the continued storage and retrieval of records in the year 2000.

In addition, MSHA proposes to add a requirement to 30 CFR 75.800–4 that clarifies that the records be retained for one year. MSHA considers this additional requirement as a non-substantive clarification of the existing standard because mine operators already are required to make these records available to an authorized representative of the Secretary, which implies that they be retained.

III. Executive Order 12866 and Regulatory Flexibility Act

Executive Order 12866 requires that regulatory agencies assess both the costs and benefits of regulations. MSHA has determined that this proposed rule does not meet the criteria for a significant regulatory action and, therefore, has not prepared a separate analysis of costs and benefits. The Regulatory Flexibility Act (RFA) requires regulatory agencies to consider a rule's impact on small entities. The analysis contained in this preamble meets MSHA's responsibilities under Executive Order 12866 and the Regulatory Flexibility Act.

Regulatory Flexibility Certification

In accordance with § 605 of the RFA, MSHA certifies that this proposed rule

would not have a significant economic impact on a substantial number of small entities. Under the Small Business Regulatory Enforcement Fairness Act (SBREFA) amendments to the RFA, MSHA must include in the proposed rule a factual basis for this certification. The Agency also must publish the regulatory flexibility certification in the **Federal Register**, along with its factual basis.

Factual Basis for Certification

Based on the fact that there is no substantive change in the recordkeeping requirements, MSHA has determined that there would be no impact on small businesses. No small governmental jurisdictions or nonprofit organizations are affected. The Agency believes that this analysis provides a reasonable basis for the certification in this case.

The Agency has provided a copy of this proposed rule and regulatory flexibility certification statement to the SBA Office of Advocacy. In addition, MSHA will mail a copy of the proposed rule, including the preamble and regulatory flexibility certification statement, to all affected mines and miners' representatives.

IV. Paperwork Reduction Act

No new or additional paperwork burdens are included in this proposed amendment. Test records are required in existing 30 CFR 75.800–3 and 75.800–4 and are approved under OMB control number 1219–0067. The Paperwork Reduction Act of 1995 (PRA 95), however, requires that regulations specify a time period for the retention of records. Existing 30 CFR 75.800–3 and 75.800–4 do not specify a retention period for maintaining these required test records. MSHA, consistent with other MSHA recordkeeping requirements, is proposing that these records be kept for at least one year.

V. Unfunded Mandates Reform Act

For purposes of the Unfunded Mandates Reform Act of 1995, as well as Executive Order 12875, this proposed rule does not include any Federal mandate that may result in increased expenditures by State, local, and tribal governments, or by the private sector.

VI. Executive Order 13045

In accordance with Executive Order 13045, Protection of Children from Environmental Health Risks and Safety Risks, MSHA has evaluated the environmental health and safety risks of the proposed rule on children. The Agency has determined that the proposed rule would have no effects on children.

List of Subjects in 30 CFR Part 75

Mine safety and health, Reporting and recordkeeping requirements, Underground coal mines.

Dated: August 24, 1998.

J. Davitt McAteer,

Assistant Secretary for Mine Safety and Health.

For the reasons discussed in the preamble, MSHA proposes to amend part 75, subchapter O, chapter I, title 30 of the Code of Federal Regulations as follows:

PART 75—MANDATORY SAFETY STANDARDS—UNDERGROUND COAL MINES

1. The authority citation for part 75 continues to read as follows:

Authority: 30 U.S.C. 811.

2. Section 75.800–4 is revised to read as follows:

§ 75.800–4 Testing, examination, and maintenance of circuit breakers; record.

(a) *Recordkeeping.* The operator shall make a record of each test, examination, repair, or adjustment of all circuit breakers protecting high-voltage circuits which enter any underground area of the mine.

(b) *Record security.* These records shall be made in a secure book that is not susceptible to alteration or electronically in a computer system so as to be secure and not susceptible to alteration.

(c) *Retention and access.* These records shall be retained at a surface location at the mine for at least one year and shall be made available to authorized representatives of the Secretary, the representative of miners, and other interested persons.

Subpart S of Part 74—[Removed and reserved]

3. Part 75 subpart S—Approved Books and Records, consisting of §§ 75.1800, 75.1806, and 75.1808, is removed and reserved.

[FR Doc. 98–23350 Filed 9–2–98; 8:45 am]

BILLING CODE 4510–43–P

DEPARTMENT OF LABOR

Mine Safety and Health Administration

30 CFR Parts 70, 71, and 90

RIN 1219–AA98

Improving and Eliminating Regulations; Calibration and Maintenance Procedures for Coal Mine Respirable Dust Samplers

AGENCY: Mine Safety and Health Administration (MSHA), Labor.

ACTION: Proposed rule; technical amendment.

SUMMARY: MSHA has revised and updated its Informational Report No. 1121 (IR 1121) to include currently approved sampling equipment and to permit the use of fast-response calibrators having a volumetric tube. The updated document is Informational Report No. 1240 (IR 1240). This proposed rule would update the existing incorporation by reference of IR 1121 in MSHA's coal mine respirable dust standards to reference IR 1240.

DATES: Submit all comments by November 2, 1998.

ADDRESSES: Send comments by mail to Patricia W. Silvey, Director, Office of Standards, Regulations, and Variances, MSHA, 4015 Wilson Boulevard, Room 631, Arlington, VA 22203; by facsimile to MSHA, Office of Standards, Regulations, and Variances at 703–235–5551; or by E-mail to comments@msha.gov. MSHA encourages commenters sending written comments by mail or facsimile to also send a computer disk of the comments. Submit written comments on the information collection requirements to the Office of Information and Regulatory Affairs, Office of Management and Budget (OMB), Attention: Desk Officer for MSHA, 725 17th Street NW., Room 10235, Washington, DC 20503.

FOR FURTHER INFORMATION CONTACT: Patricia W. Silvey, Director; Office of Standards, Regulations, and Variances, MSHA; 703–235–1910.

SUPPLEMENTARY INFORMATION:

I. Discussion of Proposal

Existing coal mining regulations §§ 70.204, 71.204, and 90.204 in title 30 of the Code of Federal Regulations (30 CFR) require that approved respirable dust sampling devices be calibrated in accordance with MSHA Informational Report No. 1121 (IR 1121) ''Standard Calibration and Maintenance Procedures for Wet Test Meters and Coal Mine Respirable Dust Samplers (Supersedes IR 1073).'' These

regulations state that amendments to IR 1121 will be announced in the **Federal Register**. This proposed rule would update the incorporation by reference of MSHA IR 1121, with the most recent revision ''IR 1240'' entitled, ''Calibration and Maintenance Procedures for Coal Mine Respirable Dust Samplers.'' This proposed rule, like the existing rule, contains information collection requirements subject to the Paperwork Reduction Act of 1995. MSHA has submitted the information collection request to OMB for approval.

IR 1240 addresses improved technology and describes the standard procedures currently used by MSHA for calibration of approved personal samplers and associated equipment and for maintenance of this equipment. IR 1240 continues to require operators to record calibration parameters and results. MSHA encourages mine operators who store records electronically to provide a mechanism which will allow the continued storage and retrieval of records in the year 2000.

IR 1240 includes the calibration and maintenance procedures for the newest approved sampling unit for collecting respirable coal mine dust which uses constant flow technology and a power source which is different from other approved sampling units. The constant flow technology permits the calibration of this unit without concern for flow fluctuations. IR 1240 notifies mine operators, and other interested parties, that such units are to be maintained as approved to ensure the accurate collection of respirable coal mine dust samples as required in 30 CFR 70, 71, and 90.

IR 1240 also permits the use of fast-response calibrators for calibrating all approved sampling units. It takes only 1 to 2 minutes per unit to calibrate a sampling unit using this newer technology, as opposed to 30 minutes using the traditional calibration systems addressed in IR 1121.

Copies of IR 1240 are available at MSHA, Coal Mine Safety and Health, Room 816, 4015 Wilson Boulevard, Arlington, VA 22203 and at each MSHA Coal Mine Safety and Health district and subdistrict office.

II. Paperwork Reduction Act

The collection of information contained in this proposal is subject to review by OMB under the Paperwork Reduction Act of 1995 (PRA 95). The title, description, and respondent categories are discussed below with an estimate of the annual information collection burden.

With respect to the following collection of information, MSHA invites comments on: (1) whether the proposed collection of information is necessary for proper performance of MSHA's functions, including whether the information would have practical utility; (2) the accuracy of MSHA's estimate of the burden of the proposed collection of information, including the validity of the methodology and assumptions used; (3) ways to enhance the quality, utility, and clarity of the information to be collected; and (4) ways to minimize the burden of the collection of information on respondents, including through the use of automated collection techniques, when appropriate, and other forms of information technology.

Description: Proposed 30 CFR 70.204, 71.204, and 90.204 would require that approved respirable dust sampling devices be calibrated in accordance with MSHA Informational Report No. 1240 (IR 1240) ''Calibration and Maintenance Procedures for Coal Mine Respirable Dust Samplers.'' The calibration procedures for wet test meters and the bubble tube method which are described in IR 1240 both require data to be recorded as part of the calibration procedure. These two calibration methods are rarely used in the mining industry because (1) most mines that calibrate their own pumps now use instantaneous flow meters for this purpose; and (2) almost all but the largest underground mines send their pumps out to be calibrated, rather than calibrating them themselves.

Description of Respondents: The respondents are mine operators. MSHA estimates that this information collection requirement affects about 900 coal mines and that these mines calibrate about 1,850 pumps per year.

Information Collection Burden: The recording of calibration data is considered an information collection burden under PRA 95. MSHA estimates that it takes about 30 minutes to calibrate each pump using the bubble tube method, including recording calibration-related information and marking the pump flowmeter; that it takes about 3 minutes (0.05 hour) to calibrate each pump with a fast-response calibrator and mark the pump flowmeter; and that pump calibration is done by the mine's technical staff at a cost of about $42 per hour. Further, MSHA estimates that 897 mines calibrate 1814 pumps with a fast response calibrator and three mines calibrate 36 pumps using the bubble tube method of pump calibration. The average time for pump calibration is 0.059 hour. MSHA anticipates that no mine operators use the wet test meter method of pump calibration.

The total estimated annual information collection burden for pump calibration and marking the pump flowmeter is about 109 hours. The estimated annual cost for this information collection burden is about $4,580.

MSHA estimates that most mine operators incurred the capital and start-up costs associated with pump calibration prior to October 1, 1995. For the purpose of this analysis, however, MSHA estimates that about five new mines per year would purchase a fast-response calibrator. Fast-response calibrators cost about $900 and have a useful life of about 10 years. The annualization factor for an equipment life of 10 years is 0.142. The annual cost for calibrators is about $640.

MSHA estimates that about 2010 mines send about 2040 pumps per year to an outside contractor for calibration and maintenance. This service includes pump calibration and marking the flowmeter; certification of pump calibration; cleaning and checking pump function; replacing worn or damaged parts; and shipping and handling. MSHA estimates that the average cost for this service is about $100 per pump. Fast-response calibrators also would require routine calibration and maintenance each year at a cost of about $100. The cost for these services is $204,500.

The following chart summarizes MSHA's estimates for compliance with PRA 95.

Provision	Number of respondents	Hours per response	Number of responses	Number of responses per respondent	Annual cost	Total hours
70.204(a), 71.204(a), 90.204(a).	900	0.059 (average)	1849	2 (average)	$204,500 + $639 = $205,139	109

The burden hours and costs associated with pump calibration and marking the flowmeter do not represent any increase for the mining industry because mine operators currently are required to perform these activities.

Under section 3507(o) of PRA 95, the Agency has submitted a copy of this proposed rule to OMB for its review and approval of this information collection. Interested persons are requested to send comments regarding the burden estimates or any other aspect of the collection of information, including suggestions for reducing the burden, (1) directly to the Office of Information and Regulatory Affairs, OMB, Attention: Desk Officer for MSHA; 725 17th Street NW., Room 10235; Washington, DC 20503, and (2) to Patricia W. Silvey, Director; Office of Standards, Regulations, and Variances, MSHA; 4015 Wilson Boulevard, Room 631; Arlington, VA 22203.

III. Executive Order 12866

Executive Order 12866 requires that regulatory agencies assess both the costs and benefits of regulations. MSHA estimates that the cost impact of the proposed rule is the same as under the existing rule. The primary benefit of the proposed rule is that it provides mine operators alternatives in maintaining and calibrating dust sampling units. It takes only 1 to 2 minutes per unit to calibrate a sampling unit using this newer technology, as opposed to 30 minutes using the traditional calibration systems addressed in IR 1121. MSHA has determined that this proposed rule does not meet the criteria for a significant regulatory action and, therefore, has not prepared a separate analysis of costs and benefits. The analysis contained in this preamble meets MSHA's responsibilities under Executive Order 12866 and the Regulatory Flexibility Act.

IV. Regulatory Flexibility Act

The Regulatory Flexibility Act (RFA) requires regulatory agencies to consider a rule's impact on small entities. Under the RFA, MSHA must use the Small Business Administration (SBA) definition for a small mine of 500 or fewer employees or, after consultation with the SBA Office of Advocacy, establish an alternative definition for the mining industry by publishing that definition in the **Federal Register** for notice and comment. Although MSHA traditionally has considered small mines to be those with fewer than 20 employees, MSHA has analyzed the impact of the proposed rule on mines with 500 or fewer employees for the purposes of the RFA.

Regulatory Flexibility Certification

In accordance with § 605 of the RFA, MSHA certifies that this proposed rule would not have a significant economic impact on a substantial number of small entities. No small governmental jurisdictions or nonprofit organizations are affected.

Under the Small Business Regulatory Enforcement Fairness Act (SBREFA) amendments to the RFA, MSHA must include in the proposed rule a factual basis for this certification. The Agency also must publish the regulatory flexibility certification in the **Federal Register**, along with its factual basis. The Agency believes that this analysis provides a reasonable basis for the certification in this case.

The Agency has provided a copy of this proposed rule and regulatory flexibility certification statement to the SBA Office of Advocacy. In addition, MSHA will mail a copy of the proposed rule, including the preamble and regulatory flexibility certification statement, to all affected mines and miners' representatives.

Factual Basis for Certification

MSHA used a qualitative approach in concluding that the proposed rule would not have a significant economic impact on a substantial number of small entities. This proposed rule updates the regulations to incorporate by reference the latest revision of an MSHA informational report describing the calibration and maintenance procedures for coal mine respirable dust sampling units. The benefit of updating provisions is that MSHA regulations would be clearer and reflect advances in technology. This proposed rule would have no economic impact on the mining industry. The cost impact on mines employing fewer than 20 miners or those employing 500 or fewer miners would be the same as under the existing rule.

VI. Unfunded Mandates Reform Act

For purposes of the Unfunded Mandates Reform Act of 1995, as well as Executive Order 12875, this proposed rule does not include any Federal mandate that may result in increased expenditures by State, local, and tribal governments, or by the private sector.

V. Executive Order 13045

In accordance with Executive Order 13045, Protection of Children from Environmental Health Risks and Safety Risks, MSHA has evaluated the environmental health and safety risks of the proposed rule on children. The Agency has determined that the proposed rule would have no effect on children.

VI. National Environmental Policy Act

The National Environmental Policy Act (NEPA) of 1969 (42 U.S.C. 4321 *et. seq.*) requires each Federal agency to consider the environmental effects of proposed actions and to prepare an Environmental Impact Statement on major actions significantly affecting the quality of the human environment. MSHA has reviewed the proposed standards in accordance with the requirements of NEPA, the regulations of the Council on Environmental Policy (40 CFR 1500), and the NEPA procedures of the Department of Labor (29 CFR 11). As a result of this review, MSHA has determined that this proposed rule would have no environmental impact.

List of Subjects in 30 CFR Parts 70, 71, and 90

Coal mines, Incorporation by reference, Scientific equipment, Mine safety and health.

Dated: August 24, 1998.

J. Davitt McAteer,

Assistant Secretary for Mine Safety and Health.

Accordingly, under the authority of 30 U.S.C. 811 and for the reasons set out in the preamble, MSHA proposes to amend chapter I, title 30 of the Code of Federal Regulations as follows:

PART 70—[AMENDED]

1. The authority citation for part 70 continues to read as follows:

Authority: 30 U.S.C. 811, 813(h), 957, 961.

2. The authority citation for subpart C is revised to read as follows:

Authority: 30 U.S.C. 811, 813(h), 957, 961.

3. Section 70.204 is amended by revising paragraphs (a) and (e) to read as follows:

§ 70.204 Approved sampling devices; maintenance and calibration.

(a) Approved sampling devices shall be maintained as approved under part 74 (Coal Mine Dust Personal Sampler Units) of this chapter and calibrated in accordance with MSHA Informational Report IR 1240 ''Calibration and Maintenance Procedures for Coal Mine Respirable Dust Samplers (supersedes IR 1121)'' by a person certified in accordance with § 70.203 (Certified person; maintenance and calibration).

* * * * *

(e) MSHA Informational Report IR 1240 referenced in paragraph (a) of this section is incorporated by reference.

This incorporation by reference was approved by the Director of the Federal Register in accordance with 5 U.S.C. 552(a) and 1 CFR part 51. Copies may be inspected or obtained at MSHA, Coal Mine Safety and Health, 4015 Wilson Boulevard, Room 816, Arlington, VA 22203 and at each MSHA Coal Mine Safety and Health district and subdistrict office. Copies may be inspected at the Office of the Federal Register, 800 North Capitol Street NW., Suite 700, Washington, DC.

PART 71—[AMENDED]

4. The authority citation for part 71 continues to read as follows:

Authority: 30 U.S.C. 811, 951, 957, 961.

5. The authority citation for subpart C is revised to read as follows:

Authority: 30 U.S.C. 811, 951, 957, 961.

6. Section 71.204 is amended by revising paragraphs (a) and (e) to read as follows:

§ 71.204 Approved sampling devices; maintenance and calibration.

(a) Approved sampling devices shall be maintained as approved under part 74 (Coal Mine Dust Personal Sampler Units) of this chapter and calibrated in accordance with MSHA Informational Report IR 1240 ''Calibration and Maintenance Procedures for Coal Mine Respirable Dust Samplers (supersedes IR 1121)'' by a person certified in accordance with § 71.203 (Certified person; maintenance and calibration).

* * * * *

(e) MSHA Informational Report IR 1240 referenced in paragraph (a) of this section is incorporated by reference. This incorporation by reference was approved by the Director of the Federal Register in accordance with 5 U.S.C. 552(a) and 1 CFR part 51. Copies may be inspected or obtained at MSHA, Coal Mine Safety and Health, 4015 Wilson Boulevard, Room 816, Arlington, VA 22203 and at each MSHA Coal Mine Safety and Health district and subdistrict office. Copies may be inspected at the Office of the Federal Register, 800 North Capitol Street NW., Suite 700, Washington, DC.

PART 90—[AMENDED]

7. The authority citation for part 90 continues to read as follows:

Authority: 30 U.S.C. 811, 813(h).

8. The authority citation for subpart C is revised to read as follows:

Authority: 30 U.S.C. 811, 813(h), 957.

9. Section 90.204 is amended by revising paragraphs (a) and (e) to read as follows:

§ 90.204 Approved sampling devices; maintenance and calibration.

(a) Approved sampling devices shall be maintained as approved under part 74 (Coal Mine Dust Personal Sampler Units) of this chapter and calibrated in accordance with MSHA Informational Report IR 1240 ''Calibration and Maintenance Procedures for Coal Mine Respirable Dust Samplers ''(supersedes IR 1121)'' by a person certified in accordance with § 90.203 (Certified person; maintenance and calibration).

* * * * *

(e) MSHA Informational Report IR 1240 referenced in paragraph (a) of this section is incorporated by reference. This incorporation by reference was approved by the Director of the Federal Register in accordance with 5 U.S.C. 552(a) and 1 CFR part 51. Copies may be inspected or obtained at MSHA, Coal Mine Safety and Health, 4015 Wilson Boulevard, Room 816, Arlington, VA 22203 and at each MSHA Coal Mine Safety and Health district and subdistrict office. Copies may be inspected at the Office of the Federal Register, 800 North Capitol Street NW., Suite 700, Washington, DC.

[FR Doc. 98–23348 Filed 9–2–98; 8:45 am]

BILLING CODE 4510–43–P

Reader Aids

Federal Register

Vol. 63, No. 171

Thursday, September 3, 1998

CUSTOMER SERVICE AND INFORMATION

Federal Register/Code of Federal Regulations

General Information, indexes and other finding aids	**202–523–5227**
Laws	**523–5227**

Presidential Documents

Executive orders and proclamations	**523–5227**
The United States Government Manual	**523–5227**

Other Services

Electronic and on-line services (voice)	**523–4534**
Privacy Act Compilation	**523–3187**
Public Laws Update Service (numbers, dates, etc.)	**523–6641**
TTY for the deaf-and-hard-of-hearing	**523–5229**

ELECTRONIC RESEARCH

World Wide Web

Full text of the daily Federal Register, CFR and other publications:

http://www.access.gpo.gov/nara

Federal Register information and research tools, including Public Inspection List, indexes, and links to GPO Access:

http://www.nara.gov/fedreg

E-mail

PENS (Public Law Electronic Notification Service) is an E-mail service that delivers information about recently enacted Public Laws. To subscribe, send E-mail to

listproc@lucky.fed.gov

with the text message:

subscribe publaws-l <firstname> <lastname>

Use listproc@lucky.fed.gov only to subscribe or unsubscribe to PENS. We cannot respond to specific inquiries at that address.

Reference questions. Send questions and comments about the Federal Register system to:

info@fedreg.nara.gov

The Federal Register staff cannot interpret specific documents or regulations.

FEDERAL REGISTER PAGES AND DATES, SEPTEMBER

46385–46628 1
46629–46860 2
46861–47126 3

CFR PARTS AFFECTED DURING SEPTEMBER

At the end of each month, the Office of the Federal Register publishes separately a List of CFR Sections Affected (LSA), which lists parts and sections affected by documents published since the revision date of each title.

7 CFR

905 46629
920 46861
924 46631
927 46633
953 46635
1106 46866
1160 46637
1306 46385

Proposed Rules:

319 46403
400 46703
457 46706
905 46708

8 CFR

Proposed Rules:

104 46511

12 CFR

3 46518
208 46518
225 46518
325 46518
567 46518

13 CFR

121 46640
123 ..... 46643, 46644
125 46640

14 CFR

39 ..... 46645, 46647, 46868, 46870, 46872, 46873, 46875, 46876, 46878, 47091
71 ..... 46511, 46880, 47091
73 46648
95 46650

Proposed Rules:

21 46834
27 46834
29 46834
39 ..... 46711, 46712, 46714, 46924, 46925, 46927, 46932, 46934
71 46936
91 46834

17 CFR

240 46881

Proposed Rules:

201 46716

21 CFR

179 46388
358 46389
520 46652
522 46652
558 46389

Proposed Rules:

3 46718
5 46718
10 46718
20 46718
207 46718
310 46718
312 46718
316 46718
600 46718
601 46718
607 46718
610 46718
640 46718
660 46718

23 CFR

1225 46881
1340 46389

24 CFR

5 ..... 46566, 46582
200 46582
207 46566
236 46582
266 ..... 46566, 46582
880 ..... 46566, 46582
881 46566
882 46566
883 46566
884 46566
886 ..... 46566, 46582
891 46566
901 46596
902 46596
965 46566
982 46582
983 46566

26 CFR

Proposed Rules

1 46937

29 CFR

406 46887
408 46887

30 CFR

21 47118
24 47118
75 47118
917 47091

Proposed Rules:

26 47120
29 47120
57 47120
70 47123
71 47123
75 47120
90 47123
707 46951
874 46951

33 CFR

165 ..... 46652, 46888, 46889,

46890, 46891

36 CFR

242.....46394

37 CFR

1.....47891

39 CFR

241.....46654

Proposed Rules:

111.....46719
501.....4628
502.....46719, 46728
3001.....46732

40 CFR

52 .....46658, 46659, 46662, 46664, 46892, 46894
63.....46526
141.....47098
143.....47098
745.....46668

Proposed Rules:

51.....46952
52 .....46732, 46733, 46942
141.....47115
143.....47115
745.....46734

42 CFR

1000.....46676
1001.....46676
1002.....46676
1005.....46676

Proposed Rules:

5.....46538
51c.....46538
1001.....46736
1002.....46736
1003.....46736

45 CFR

Proposed Rules:

1207.....46954
1208.....46963
1209.....46972
2551.....46954
2552.....46963
2553.....46972

47 CFR

Proposed Rules:

73.....46978, 46979

48 CFR

1504.....46898
1542.....46898
1552.....46898

49 CFR

195.....46692
1002.....46394
1182.....46394
1187.....36394
1188.....46394
571.....46899

Proposed Rules:

171.....46844
172.....46844
173.....46844
178.....46844
572.....46979, 49981

50 CFR

17.....46900
20.....36399
100.....46394
226.....46693
32.....46910
660.....46701

Proposed Rules:

679.....46993

REMINDERS

The items in this list were editorially compiled as an aid to Federal Register users. Inclusion or exclusion from this list has no legal significance.

RULES GOING INTO EFFECT SEPTEMBER 3, 1998

AGRICULTURE DEPARTMENT

Agricultural Marketing Service

Fluid milk promotion order; published 9-2-98

Oranges, grapefruit, tangerines, and tangelos grown in—

Florida; published 9-2-98

Pears (winter) grown in—

Oregon and Washington; published 9-2-98

Prunes (fresh) grown in—

Washington and Oregon; published 9-2-98

ENVIRONMENTAL PROTECTION AGENCY

Acquisition regulations:

Administrative amendments; published 9-3-98

Air quality implementation plans; approval and promulgation; various States:

Arizona; published 8-3-98

INTERIOR DEPARTMENT

Fish and Wildlife Service

Hunting and fishing:

Refuge-specific regulations; published 9-3-98

LABOR DEPARTMENT

Labor-Management Standards Office

Organization, functions, and authority delegations:

Labor-management programs and labor-management standards—

Federal sector labor organizations; conduct standards; technical amendments; correction; published 9-3-98

SECURITIES AND EXCHANGE COMMISSION

Securities:

Shareholders proposals

Correction; published 9-3-98

SOCIAL SECURITY ADMINISTRATION

Social security benefits and supplemental security income:

Federal old age, survivors and disability insurance; and aged, blind, and disabled—

Claimant representatives; standards of conduct; published 8-4-98

TRANSPORTATION DEPARTMENT

Coast Guard

Ports and waterways safety:

Copper Canyon, Lake Havasu, Colorado River; regulated navigation area

Correction; published 9-3-98

TRANSPORTATION DEPARTMENT

Federal Aviation Administration

Airworthiness directives:

Boeing; published 8-19-98

TRANSPORTATION DEPARTMENT

National Highway Traffic Safety Administration

Motor vehicle operation by intoxicated persons; published 9-3-98

COMMENTS DUE NEXT WEEK

AGRICULTURE DEPARTMENT

Agricultural Marketing Service

Limes and avocados grown in—

Florida; comments due by 9-11-98; published 7-13-98

Pears (Bartlett) grown in—

Oregon and Washington; comments due by 9-14-98; published 7-16-98

Perishable Agricultural Commodities Act; implementation:

Retailers, grocery wholesalers, and other licensees; license renewal periods; comments due by 9-14-98; published 7-31-98

Potatoes (Irish) grown in—

Colorado; comments due by 9-14-98; published 7-16-98

AGRICULTURE DEPARTMENT

Animal and Plant Health Inspection Service

Animal welfare:

Primary enclosures for dogs and cats; comments due by 9-11-98; published 7-13-98

Plant-related quarantine, domestic:

Gypsy moth; comments due by 9-14-98; published 7-16-98

COMMERCE DEPARTMENT

National Oceanic and Atmospheric Administration

Fishery conservation and management:

Caribbean, Gulf, and South Atlantic fisheries—

South Atlantic snapper-grouper; comments due by 9-14-98; published 8-14-98

West Coast States and Western Pacific fisheries—

Northern anchovy; comments due by 9-14-98; published 8-19-98

Pacific Coast groundfish; comments due by 9-14-98; published 8-28-98

COMMODITY FUTURES TRADING COMMISSION

Over-the-counter derivatives; concept release; comments due by 9-11-98; published 6-24-98

ENVIRONMENTAL PROTECTION AGENCY

Air programs:

Stratospheric ozone protection—

Halon recycling and recovery equipment certification; comments due by 9-10-98; published 8-11-98

Halon recycling and recovery equipment certification; comments due by 9-10-98; published 8-11-98

Air programs; approval and promulgation; State plans for designated facilities and pollutants:

Minnesota; comments due by 9-11-98; published 8-12-98

Air quality implementation plans; approval and promulgation; various States:

California; comments due by 9-10-98; published 8-11-98

Maine; comments due by 9-10-98; published 8-11-98

Utah; comments due by 9-14-98; published 8-14-98

FEDERAL COMMUNICATIONS COMMISSION

Radio services, special:

Private land mobile services—

Dedicated short range communications of intelligent transportation services; 75 MHz band allocation; comments due by 9-14-98; published 6-30-98

Radio stations; table of assignments:

Texas; comments due by 9-14-98; published 7-31-98

Wyoming et al.; comments due by 9-14-98; published 7-31-98

FEDERAL ELECTION COMMISSION

Rulemaking petitions:

Prohibited and excessive contributions; ''soft money''; comments due by 9-11-98; published 7-13-98

FEDERAL HOUSING FINANCE BOARD

Freedom of Information Act; implementation; comments due by 9-11-98; published 7-13-98

HEALTH AND HUMAN SERVICES DEPARTMENT

Health Care Financing Administration

Medicare:

Ambulatory surgical centers; ratesetting methodology, payment rates and policies, and covered surgical procedures list; comments due by 9-10-98; published 8-14-98

Skilled nursing facilities; prospective payment system and consolidated billin; comments due by 9-11-98; published 7-13-98

INTERIOR DEPARTMENT

Fish and Wildlife Service

Endangered and threatened species:

Cactus ferruginous pygmy-owl; comments due by 9-14-98; published 8-13-98

Importation, exportation, and transportation of wildlife:

Domesticated species, captive-bred and captive-born species, and user fee structure; intent to review; comments due by 9-14-98; published 7-15-98

INTERIOR DEPARTMENT

Surface Mining Reclamation and Enforcement Office

Permanent program and abandoned mine land reclamation plan submissions:

Alaska; comments due by 9-10-98; published 8-11-98

Kentucky; comments due by 9-10-98; published 8-26-98

JUSTICE DEPARTMENT

Immigration and Naturalization Service

Immigration:

Asylum and removal withholding procedures—

Applicants who establish persecution or who may be able to avoid persecution in his or her home country by relocating to another area of that country; comments due by 9-11-98; published 8-4-98

LABOR DEPARTMENT

Mine Safety and Health Administration

Coal mine safety and health:

Underground coal mines—

Ventilation; safety standards; comments due by 9-14-98; published 7-14-98

INTERIOR DEPARTMENT

National Indian Gaming Commission

Indian Gaming Regulatory Act:

Gaming operations on Indian lands; minimum internal control standards; comments due by 9-10-98; published 8-11-98

NORTHEAST DAIRY COMPACT COMMISSION

Rulemaking procedures and producer referendum; comments due by 9-14-98; published 7-14-98

SMALL BUSINESS ADMINISTRATION

Business loans:

504 program financing and clarification of existing regulations; comments due by 9-14-98; published 8-13-98

TRANSPORTATION DEPARTMENT

Coast Guard

Ports and waterways safety:

Atlantic Intracoastal Waterway, Marine Corps Base Camp Lejeune, NC; comments due by 9-14-98; published 6-16-98

TRANSPORTATION DEPARTMENT

Economic regulations:

Aviation data requirements review and modernization program; comments due by 9-14-98; published 7-15-98

TRANSPORTATION DEPARTMENT

Federal Aviation Administration

Airworthiness directives:

Aerospatiatle; comments due by 9-14-98; published 8-13-98

Airbus; comments due by 9-14-98; published 8-13-98

British Aerospace; comments due by 9-14-98; published 8-13-98

Dornier; comments due by 9-14-98; published 8-13-98

Fokker; comments due by 9-14-98; published 8-13-98

General Electric Co.; comments due by 9-14-98; published 7-14-98

McDonnell Douglas; comments due by 9-14-98; published 7-30-98

Pratt & Whitney; comments due by 9-14-98; published 7-14-98

Rolls-Royce Ltd.; comments due by 9-14-98; published 7-14-98

Short Brothers; comments due by 9-14-98; published 8-13-98

Class D airspace; comments due by 9-11-98; published 7-28-98

Class E airspace; comments due by 9-11-98; published 7-28-98

TREASURY DEPARTMENT

Internal Revenue Service

Employment taxes and collection of income taxes at source:

Federal employment tax deposits; de minimis rule; cross reference; comments due by 9-14-98; published 6-16-98

Income taxes:

Trading safe harbors; comments due by 9-10-98; published 6-12-98

TREASURY DEPARTMENT

Thrift Supervision Office

Savings associations:

Electronic operations; Federal regulatory review; comments due by 9-14-98; published 8-13-98

VETERANS AFFAIRS DEPARTMENT

Medical benefits:

Non VA physicians; allowance for drug prescriptions to be filled by non-VA pharmacies in state homes under VA contracts; comments due by 9-14-98; published 7-14-98